FAIRCHILD™

Is Now Part of

ON Semiconductor®

To learn more about ON Semiconductor, please visit our website at
www.onsemi.com

ON Semiconductor and the ON Semiconductor logo are trademarks of Semiconductor Components Industries, LLC dba ON Semiconductor or its subsidiaries in the United States and/or other countries. ON Semiconductor owns the rights to a number of patents, trademarks, copyrights, trade secrets, and other intellectual property. A listing of ON Semiconductor's product/patent coverage may be accessed at www.onsemi.com/site/pdf/Patent-Marking.pdf. ON Semiconductor reserves the right to make changes without further notice to any products herein. ON Semiconductor makes no warranty, representation or guarantee regarding the suitability of its products for any particular purpose, nor does ON Semiconductor assume any liability arising out of the application or use of any product or circuit, and specifically disclaims any and all liability, including without limitation special, consequential or incidental damages. Buyer is responsible for its products and applications using ON Semiconductor products, including compliance with all laws, regulations and safety requirements or standards, regardless of any support or applications information provided by ON Semiconductor. "Typical" parameters which may be provided in ON Semiconductor data sheets and/or specifications can and do vary in different applications and actual performance may vary over time. All operating parameters, including "Typicals" must be validated for each customer application by customer's technical experts. ON Semiconductor does not convey any license under its patent rights nor the rights of others. ON Semiconductor products are not designed, intended, or authorized for use as a critical component in life support systems or any FDA Class 3 medical devices or medical devices with a same or similar classification in a foreign jurisdiction or any devices intended for implantation in the human body. Should Buyer purchase or use ON Semiconductor products for any such unintended or unauthorized application, Buyer shall indemnify and hold ON Semiconductor and its officers, employees, subsidiaries, affiliates, and distributors harmless against all claims, costs, damages, and expenses, and reasonable attorney fees arising out of, directly or indirectly, any claim of personal injury or death associated with such unintended or unauthorized use, even if such claim alleges that ON Semiconductor was negligent regarding the design or manufacture of the part. ON Semiconductor is an Equal Opportunity/Affirmative Action Employer. This literature is subject to all applicable copyright laws and is not for resale in any manner.

FAIRCHILD SEMICONDUCTOR®

February 2013

FSFR-HS Series — Advanced Fairchild Power Switch (FPS™) for Half-Bridge Resonant Converters

Features

- Variable Frequency Control with 50% Duty Cycle for Half-Bridge Resonant Converter Topology
- High Efficiency through Zero Voltage Switching (ZVS)
- Built-in High-Side Gate Driver IC
- Internal UniFET™s with Fast-Recovery Type Body Diode (t_{rr}=160 ns Typical)
- Fixed Dead Time (350 ns) Optimized for MOSFETs
- Operating Frequency Up to 600 kHz for Soft-Start
- Self Auto-Restart Operation for All Protections, Despite External LV_{CC} Bias
- Line UVLO with Programmable Hysteresis Level
- Simple On/Off with Line UVLO Pin
- Easy Configuration and Compatibility with FAN7930 for Line UVLO without External Components
- Protection Functions: Over-Voltage Protection (OVP), Over-Current Protection (OCP), Abnormal Over-Current Protection (AOCP), Internal Thermal Shutdown (TSD)

Applications

- PDP and LCD TVs
- Desktop PCs and Servers
- Adapters
- Telecom Power Supplies

Description

The FSFR-HS is a highly integrated power switch designed for high-efficiency half-bridge resonant converters. Offering everything necessary to build a reliable and robust resonant converter, the FSFR-HS simplifies designs while improving productivity and performance. The FSFR-HS combines power MOSFETs, a high-side gate-drive circuit, an accurate current-controlled oscillator, and built-in protection functions.

The high-side gate-drive circuit has a common-mode noise cancellation capability, which provides stable operation with excellent noise immunity. Using zero-voltage-switching (ZVS) technique dramatically reduces the switching losses and significantly improves efficiency. The ZVS also reduces the switching noise noticeably, even though the operating frequency increases. It allows a small Electromagnetic Interference (EMI) filter, besides the high operating frequency, to reduce the volume of the resonant tank and to increase power density.

The FSFR-HS can be applied to resonant converter topologies such as series resonant, parallel resonant, and LLC resonant converters.

Related Resources

AN4151 — Half-Bridge LLC Resonant Converter Design Using FSFR-Series Fairchild Power Switch (FPS™)

Ordering Information

Part Number	Package	Operating Junction Temperature	$R_{DS(ON_MAX)}$	Maximum Output Power without Heatsink (V_{IN}=350~400 V)(1,2)	Maximum Output Power with Heatsink (V_{IN}=350~400 V)(1,2)
FSFR1800HS	9-SIP	-40 to +130°C	0.95 Ω	120 W	260 W
FSFR1800HSL	9-SIP L-Forming				
FSFR1700HS	9-SIP	-40 to +130°C	1.25 Ω	100 W	200 W
FSFR1700HSL	9-SIP L-Forming				

Notes:
1. The junction temperature can limit the maximum output power.
2. Maximum practical continuous power in an open-frame design at 50°C ambient.

© 2011 Fairchild Semiconductor Corporation

Application Circuit Diagram

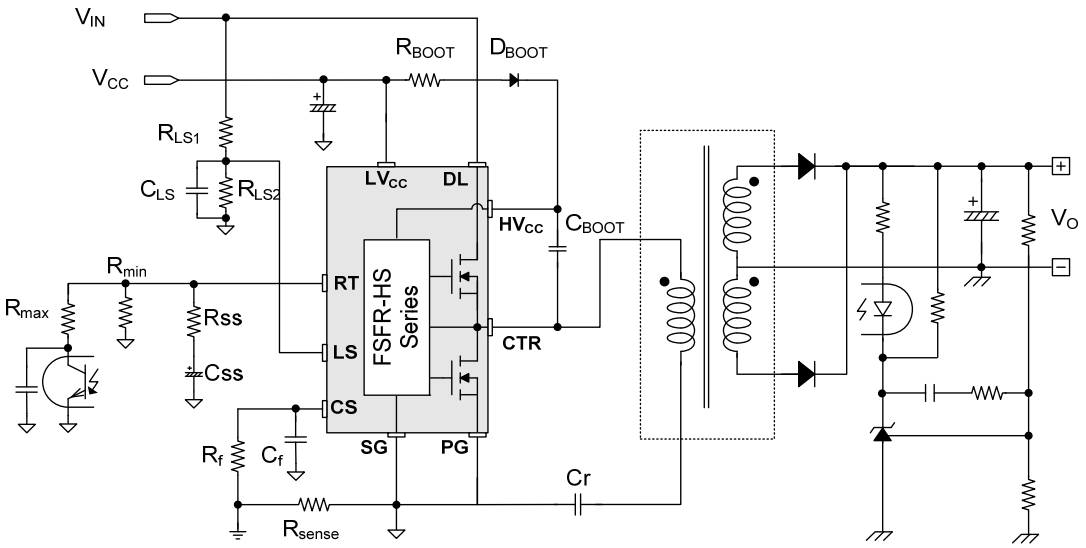

Figure 1. Typical Application Circuit (LLC Resonant Half-Bridge Converter)

Block Diagram

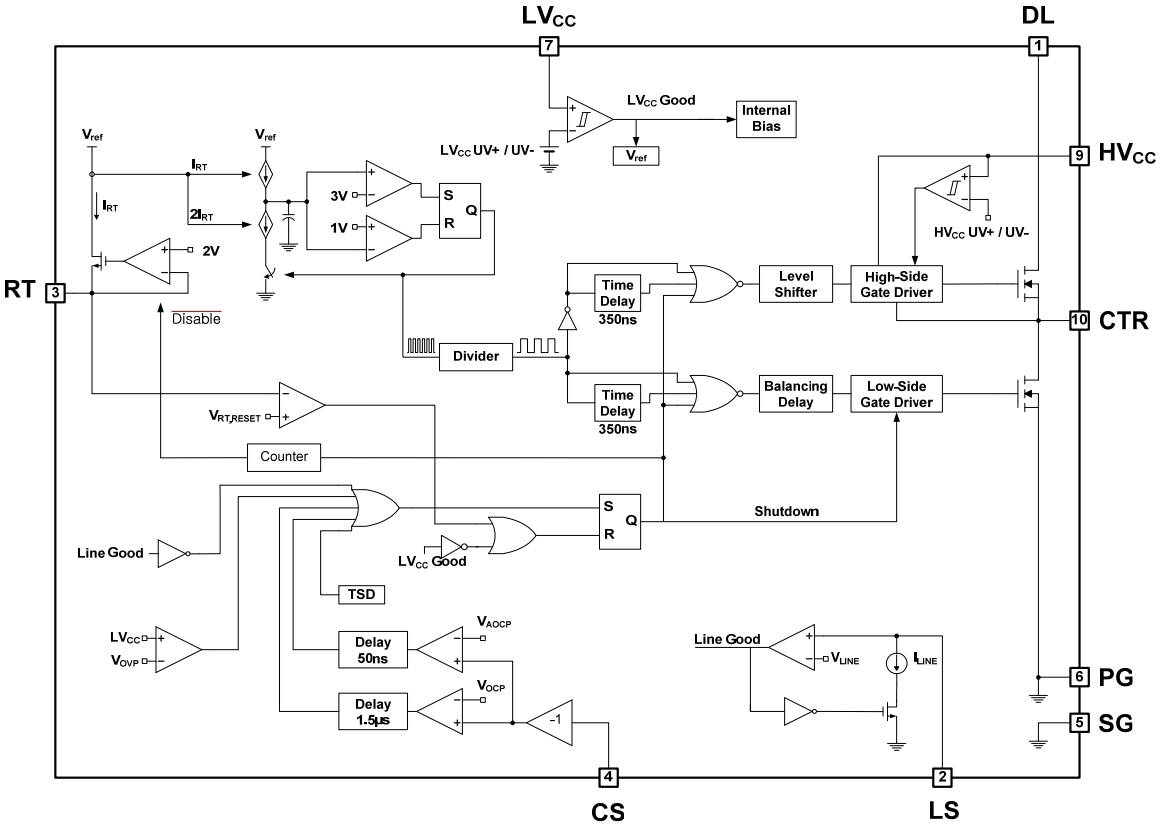

Figure 2. Internal Block Diagram

Pin Configuration

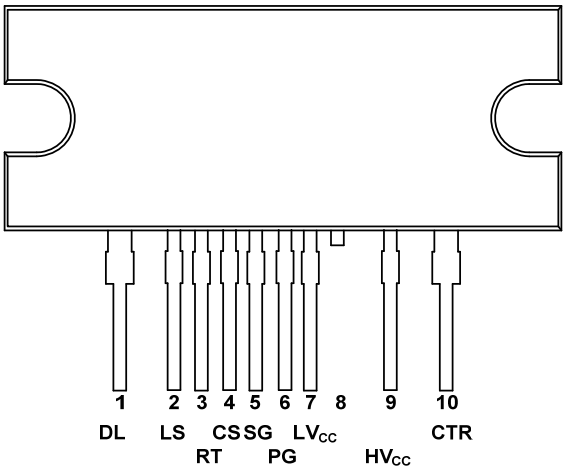

Figure 3. Package Diagram

Pin Definitions

Pin #	Name	Description
1	DL	This is the drain of the high-side MOSFET, typically connected to the input DC link voltage.
2	LS	This is the line-sensing pin for the input voltage Under-Voltage Lockout (UVLO).
3	RT	This pin is used for controlling the switching frequency in normal operation. When any protections are triggered, the internal Auto/Restart (A/R) circuit starts to sense the voltage on the pin, which is discharged naturally by external resistance. The IC can be operated with A/R when the voltage decreases 0.1 V. Typically, an opto-coupler is connected to control the switching frequency for the output voltage regulation and resistors for setting minimum / maximum operating frequency.
4	CS	This pin senses the current flowing through the low-side MOSFET. Typically, negative voltage is applied to this pin.
5	SG	This pin is the ground of the control part.
6	PG	This pin is the power ground. This pin is connected to the source of the low-side MOSFET.
7	LV_{CC}	This pin is the supply voltage of the control IC.
8	NC	No connection
9	HV_{CC}	This is the supply voltage of the high-side gate-drive circuit.
10	CTR	This is the drain of the low-side MOSFET. Typically, a transformer is connected to this pin.

Absolute Maximum Ratings

Stresses exceeding the absolute maximum ratings may damage the device. The device may not function or be operable above the recommended operating conditions and stressing the parts to these levels is not recommended. In addition, extended exposure to stresses above the recommended operating conditions may affect device reliability. The absolute maximum ratings are stress ratings only.

Symbol	Parameter			Min.	Max.	Unit
V_{DS}	Maximum Drain-to-Source Voltage (DL-CTR and CTR-PG)			500		V
LV_{CC}	Low-Side Supply Voltage			-0.3	25.0	V
HV_{CC} to CTR	High-Side V_{CC} Pin to Low-Side Drain Voltage			-0.3	25.0	V
HV_{CC}	High-Side Floating Supply Voltage			-0.3	525.0	V
V_{RT}	Timing Resistor Connecting and Auto-Restart Pin Voltage			-0.3	5.0	V
V_{LS}	Line Sensing Input Voltage			-0.3	LV_{CC}	V
V_{CS}	Current Sense (CS) Pin Input Voltage			-5	1	V
f_{sw}	Recommended Switching Frequency			10	600	kHz
dV_{CTR}/dt	Allowable Low-Side MOSFET Drain Voltage Slew Rate				50	V/ns
P_D	Total Power Dissipation(4)	FSFR1800HS/L			11.7	W
		FSFR1700HS/L			11.6	
T_J	Maximum Junction Temperature(5)				+150	°C
	Recommended Operating Junction Temperature(5)			-40	+130	
T_{STG}	Storage Temperature Range			-55	+150	°C
MOSFET Section						
V_{DGR}	Drain Gate Voltage (R_{GS}=1 MΩ)			500		V
V_{GS}	Gate Source (GND) Voltage				±30	V
I_{DM}	Drain Current Pulsed(6)	FSFR1800HS/L			23	A
		FSFR1700HS/L			20	
I_D	Continuous Drain Current	FSFR1800HS/L	T_C=25°C		7.0	A
			T_C=100°C		4.5	
		FSFR1700HS/L	T_C=25°C		6.0	
			T_C=100°C		3.9	
Package Section						
Torque	Recommended Screw Torque			5~7		kgf·cm

Notes:
3. These parameters, although guaranteed, are tested only in EDS (wafer test) process.
4. Per MOSFET when both MOSFETs are conducting.
5. The maximum value of the recommended operating junction temperature is limited by thermal shutdown.
6. Pulse width is limited by maximum junction temperature.

Thermal Impedance

T_A=25°C unless otherwise specified.

Symbol	Parameter		Value	Unit
θ_{JC}	Junction-to-Case Center Thermal Impedance (Both MOSFETs Conducting)	FSFR1800HS/L	10.7	ºC/W
		FSFR1700HS/L	10.8	
θ_{JA}	Junction-to-Ambient Thermal Impedance	FSFR1800HS/L FSFR1700HS/L	80	ºC/W

Electrical Characteristics

T_A=25°C, LV_{CC}, HV_{CC} =17 V_{DC} and R_T=26 kΩ unless otherwise specified.

Symbol	Parameter		Conditions	Min.	Typ.	Max.	Unit
MOSFET Section							
BV_{DSS}	Drain-to-Source Breakdown Voltage		I_D=200 µA, T_A=25°C	500			V
			I_D=200 µA, T_A=125°C		540		
$R_{DS(ON)}$	On-State Resistance	FSFR1800HS/L	V_{GS}=10 V, I_D=3.0 A		0.77	0.95	Ω
		FSFR1700HS/L	V_{GS}=10 V, I_D=2.0 A		1.00	1.25	
t_{rr}	Body Diode Reverse Recovery Time(7)	FSFR1800HS/L	V_{GS}=0 V, I_{DIODE}=7.0 A, dI_{DIODE}/dt=100 A/µs		160		ns
		FSFR1700HS/L	V_{GS}=0 V, I_{DIODE}=6.0 A, dI_{DIODE}/dt=100 A/µs		160		
C_{ISS}	Input Capacitance(7)	FSFR1800HS/L	V_{DS}=25 V, V_{GS}=0 V, f=1.0 MHz		639		pF
		FSFR1700HS/L			512		pF
C_{OSS}	Output Capacitance(7)	FSFR1800HS/L			82.1		pF
		FSFR1700HS/L			66.5		pF
Supply Section							
I_{LK}	Offset Supply Leakage Current		HV_{CC}=V_{CTR}=500 V			50	µA
I_QHV_{CC}	Quiescent HV_{CC} Supply Current		(HV_{CC}UV+) - 0.1 V		50	120	µA
I_QLV_{CC}	Quiescent LV_{CC} Supply Current		(LV_{CC}UV+) - 0.1 V		100	200	µA
I_OHV_{CC}	Operating HV_{CC} Supply Current (RMS Value)		f_{OSC}=50 KHz		6	9	mA
			No Switching		100	200	µA
I_OLV_{CC}	Operating LV_{CC} Supply Current (RMS Value)		f_{OSC}=50 KHz		7	11	mA
			No Switching		2	4	mA
UVLO Section							
LV_{CC}UV+	LV_{CC} Supply Under-Voltage Positive Going Threshold ($LV_{CC,START}$)			11.2	12.5	13.8	V
LV_{CC}UV-	LV_{CC} Supply Under-Voltage Negative Going Threshold ($LV_{CC,STOP}$)			8.9	10.0	11.1	V
LV_{CC}UVH	LV_{CC} Supply Under-Voltage Hysteresis				2.5		V
HV_{CC}UV+	HV_{CC} Supply Under-Voltage Positive Going Threshold ($HV_{CC,START}$)			8.2	9.2	10.2	V
HV_{CC}UV-	HV_{CC} Supply Under-Voltage Negative Going Threshold ($HV_{CC,STOP}$)			7.8	8.7	9.6	V
HV_{CC}UVH	HV_{CC} Supply Under-Voltage Hysteresis				0.5		V
Oscillator & Feedback Section							
V_{RT}	Output Voltage on RT Pin		R_T=26 kΩ	1.5	2.0	2.5	V
f_{OSC}	Output Oscillation Frequency			47	50	53	kHz
DC	Output Duty Cycle			48	50	52	%

Continued on the following page…

Electrical Characteristics (Continued)

T_A=25°C, LV_{CC}, HV_{CC} =17 V_{DC} and R_T=26 kΩ unless otherwise specified.

Symbol	Parameter	Conditions	Min.	Typ.	Max.	Unit
Protection Section						
$V_{RT,RESET}$	Threshold Voltage to Begin Restart		0.07	0.12	0.17	V
$t_{DELAY,RESET}$	Delay to Disable OSC Circuit After Protection	f_{osc}=50 kHz		20		ms
V_{LINE}	On Threshold of Input Voltage		2.38	2.50	2.62	V
I_{LINE}	Hysteresis Current for Line UVLO		7.5	9.5	11.5	µA
V_{OVP}	LV_{CC} Over-Voltage Protection		21	23	25	V
V_{AOCP}	AOCP Threshold Voltage		-1.0	-0.9	-0.8	V
t_{BAO}	AOCP Blanking Time(7)	$V_{CS} < V_{AOCP}$		50		ns
V_{OCP}	OCP Threshold Voltage		-0.64	-0.58	-0.52	V
t_{BO}	OCP Blanking Time(7)	$V_{CS} < V_{OCP}$	1.0	1.5	2.0	µs
t_{DA}	Delay Time (Low-Side) Detecting from V_{AOCP} to Switch Off(7)			250	400	ns
T_{SD}	Thermal Shutdown Temperature(7)		120	135	150	°C
Dead-Time Control Section						
D_T	Dead Time(8)			350		ns

Notes:
7. This parameter, although guaranteed, is not tested in production.
8. These parameters, although guaranteed, are tested only in EDS (wafer test) process.

Typical Performance Characteristics

These characteristic graphs are normalized at T_A=25°C.

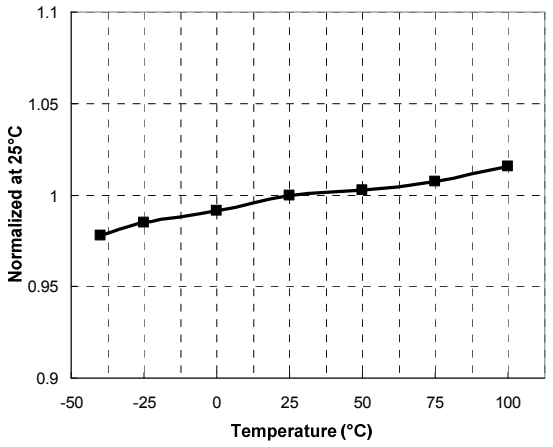

Figure 4. Low-Side MOSFET Duty Cycle vs. Temperature

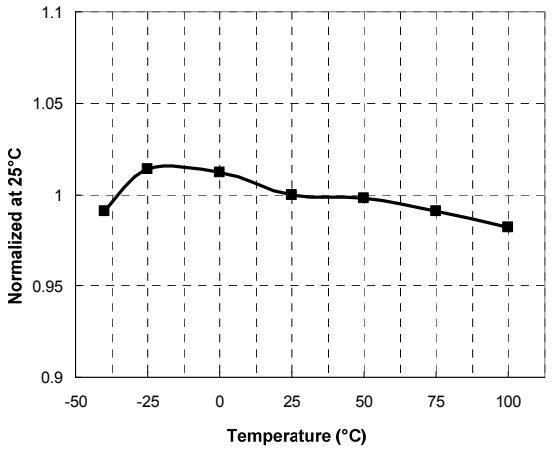

Figure 5. Switching Frequency vs. Temperature

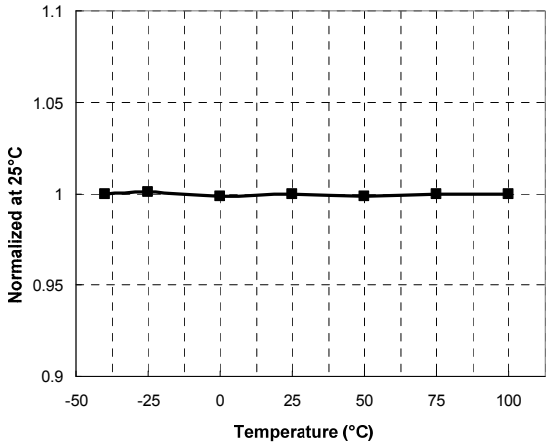

Figure 6. High-Side V_{CC} (HV_{CC}) Start vs. Temperature

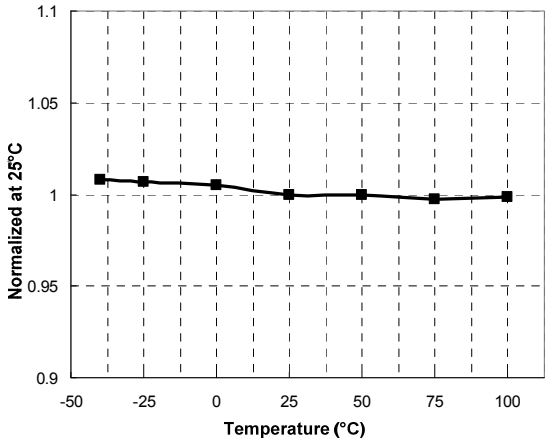

Figure 7. High-Side V_{CC} (HV_{CC}) Stop vs. Temperature

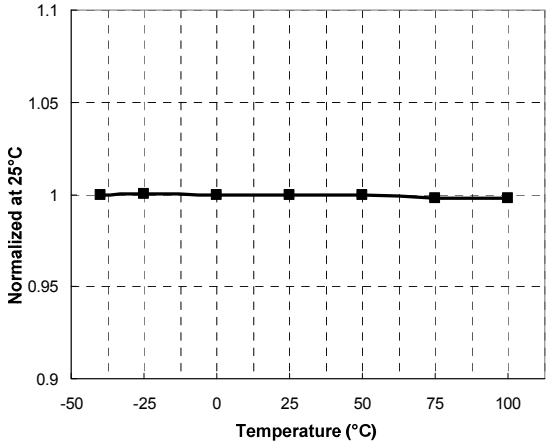

Figure 8. Low-Side V_{CC} (LV_{CC}) Start vs. Temperature

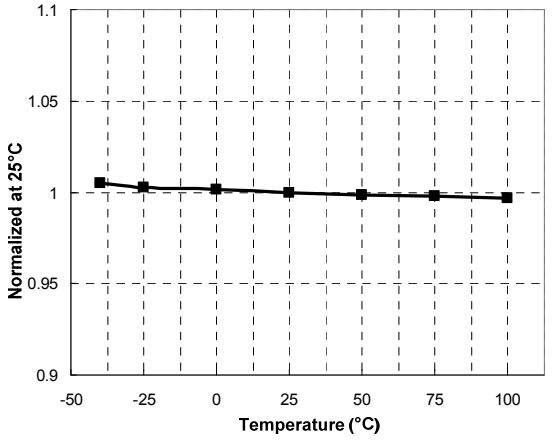

Figure 9. Low-Side V_{CC} (LV_{CC}) Stop vs. Temperature

Typical Performance Characteristics (Continued)

These characteristic graphs are normalized at T_A=25°C.

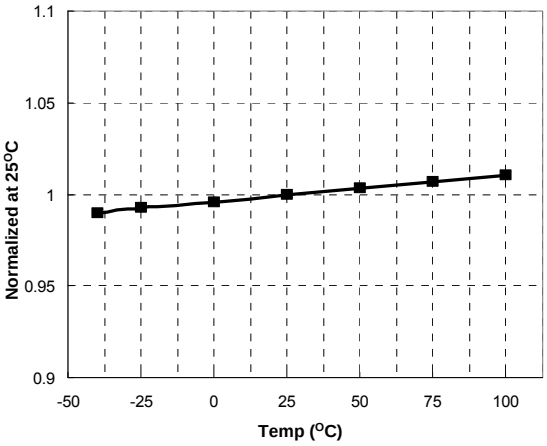

Figure 10. LV_{CC} OVP Voltage vs. Temperature

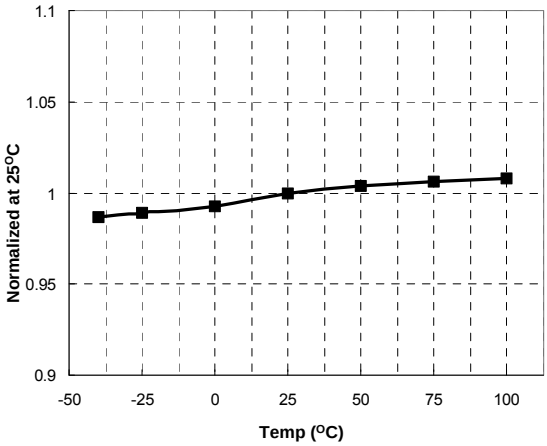

Figure 11. RT Voltage vs. Temperature

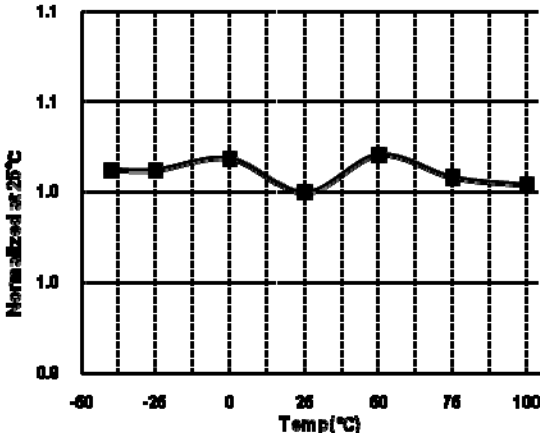

Figure 12. $V_{RT,RESET}$ vs. Temperature

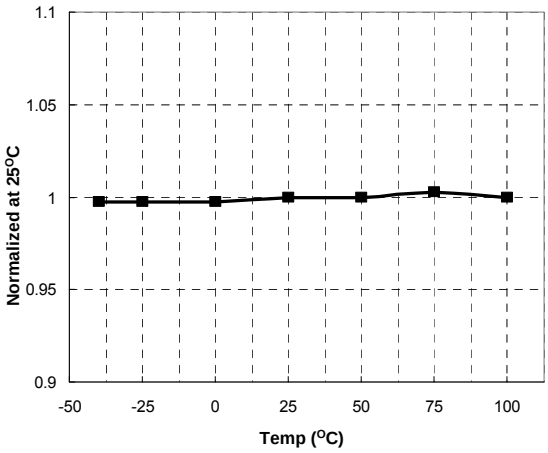

Figure 13. OCP Voltage vs. Temperature

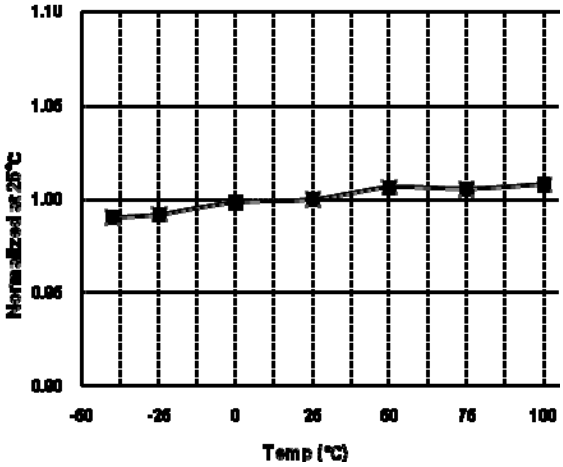

Figure 14. V_{LINE} vs. Temperature

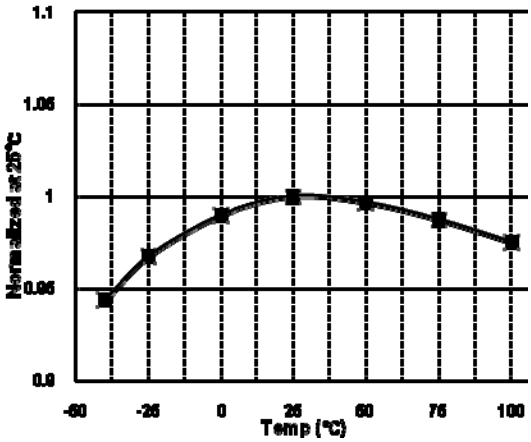

Figure 15. I_{LINE} vs. Temperature

Typical Performance Characteristics (Continued)

These characteristic graphs are normalized at T_A=25°C.

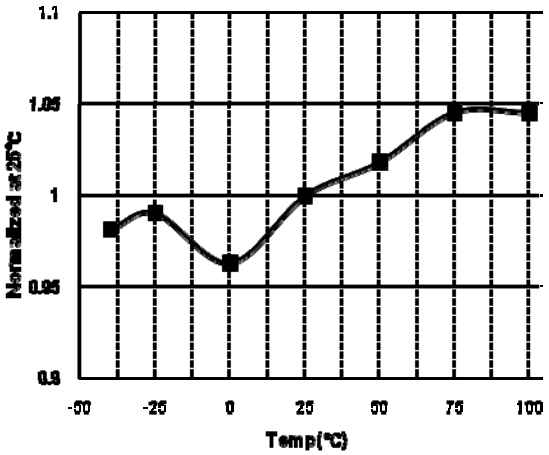

Figure 16. $t_{DELAY,RESET}$ vs. Temperature

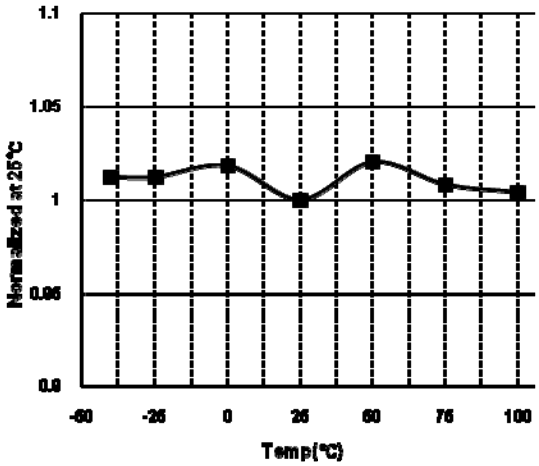

Figure 17. $V_{RT,RESET}$ vs. Temperature

Functional Description

1. Basic Operation: FSFR-HS series is designed to drive high-side and low-side MOSFETs complementarily with 50% duty cycle. A fixed dead time of 350 ns is introduced between consecutive transitions, as shown in Figure 18.

Once LV_{CC} is higher than $LV_{CC,START}$ = 12.5 V, the IC starts to operate, generates the low-side gate signal, and drives the low-side MOSFET. The bootstrap diode and capacitor is charged by the low-side MOSFET's operation. After the voltage on HV_{CC} increases up to $HV_{CC,START}$, typically 9.2 V, the high-side gate signal is generated for the MOSFET.

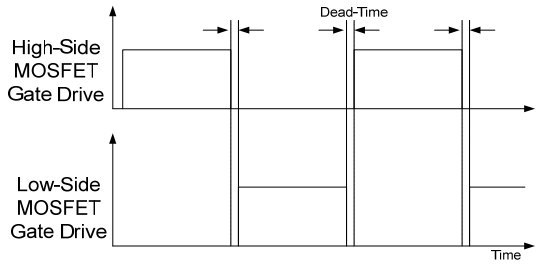

Figure 18. MOSFET Gate Drive Signals

2. Internal Oscillator: FSFR-HS series employs a current-controlled oscillator, as shown in Figure 19. Internally, the voltage of the RT pin is regulated at 2 V and the charging / discharging current for the oscillator capacitor, C_T, is obtained by copying the current flowing out of the RT pin (I_{CTC}) using a current mirror. Therefore, the switching frequency increases as I_{CTC} increases.

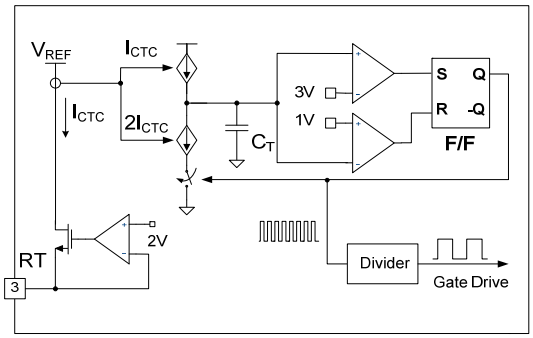

Figure 19. Current-Controlled Oscillator

3. Frequency Setting: Figure 20 shows the typical voltage gain curve of a resonant converter, where the gain is inversely proportional to the switching frequency in the ZVS region. The output voltage can be regulated by modulating the switching frequency. Figure 21 shows the typical circuit configuration for the RT pin, where the opto-coupler transistor is connected to the RT pin to modulate the switching frequency. The switching frequency may be controlled from 20 kHz to 500 kHz.

The minimum switching frequency is determined as:

$$f_{min} = \frac{1}{792\,p \times R_{min} + 0.54\mu} \; [Hz] \qquad (1)$$

Assuming the saturation voltage of opto-coupler transistor is 0.2 V, the maximum switching frequency is determined as:

$$f_{max} = \frac{1}{792\,p \times R_{min} \,||\, R_{max} + 0.54\mu} \; [Hz] \qquad (2)$$

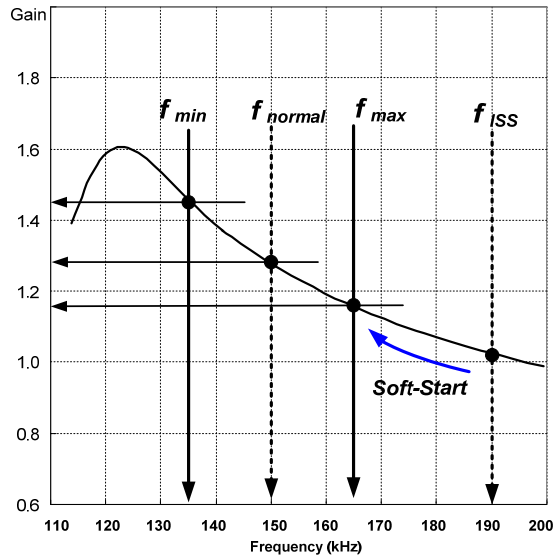

Figure 20. Resonant Converter Typical Gain Curve

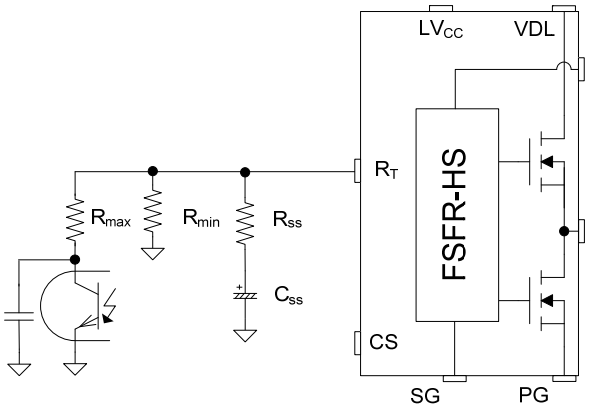

Figure 21. Frequency Control Circuit

To prevent excessive inrush current and overshoot of output voltage during startup, the IC needs to increase the voltage gain of the resonant converter progressively. Since the voltage gain of the resonant converter is inversely proportional to the switching frequency, soft-start is implemented by sweeping down the switching frequency from an initial high frequency (f_{ISS}) until the output voltage is established.

The soft-start circuit is constructed by connecting R-C series network to the RT pin, as shown in Figure 21. Initially, the operating frequency is set by the parallel impedance of R_{SS} and R_{min}.

The initial maximum frequency can be set up to 600 kHz, which is given by:

$$f_{ss} = \frac{1}{792\,p \times R_{\min} \parallel R_{SS} + 0.54\mu} \; [Hz] \qquad (3)$$

The soft-start time, t_{SS}, can be calculated by:

$$t_{SS} = 3 \times R_{SS} \cdot C_{SS} \;\; [s] \qquad (4)$$

4. Self Auto-Restart: The FSFR-HS series can restart automatically even though any built-in protections are triggered in case external supply voltage is applied. As shown in Figure 22 and Figure 23; once a protection is triggered, the power MOSFET immediately stops. The counter starts to operate and 1008-clocks are counted, then the V-I converter is disabled. C_{SS} starts to be naturally discharged with the series impedance of R_{SS} and R_{min} until V_{RT} drops to $V_{RT,RESET}$, typically 0.1 V. Then, all protections are reset and the V-I converter resumes. The FSFR-HS starts switching again with soft-start.

The counter operating time for 1008-clocks after protection activation is set by the current out of the RT pin until V_{RT} drops to $V_{RT,RESET}$. Finally, the stop time of FSFR-HS can be estimated, without considering the counter operation time, as:

$$t_{STOP} = 3 C_{SS} \cdot \left(R_{SS} + R_{min}\right) \; [s] \qquad (5)$$

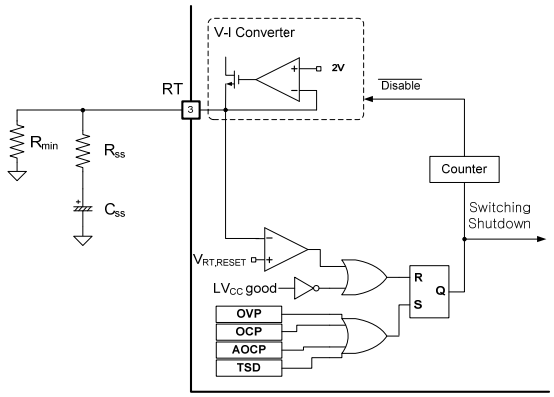

Figure 22. Internal Block for Auto-Restart

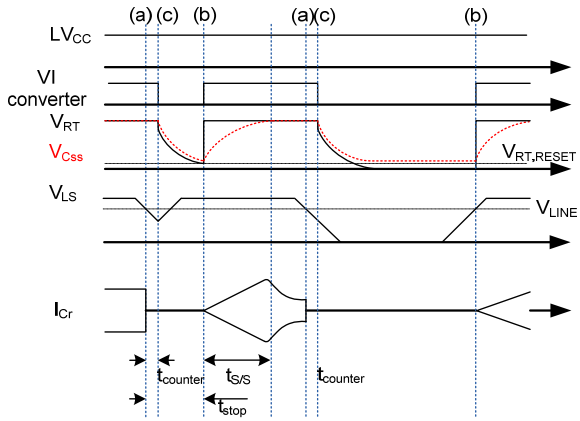

(a) Protection Trigger, (b) FSFR-HS Restart, (c) Counter Stop

Figure 23. Self Auto-Restart Operation

5. Protection Circuits: The FSFR-HS series has several self-protective functions; such as Over-Current Protection (OCP), Abnormal Over-Current Protection (AOCP), Over-Voltage Protection (OVP), Thermal Shutdown (TSD), and Line Under-Voltage Lockout (LUVLO or Brownout). These protections are Auto-Restart Mode protections, as shown in Figure 24.

Once a fault condition is detected, switching is instantly terminated and the MOSFETs remain off. When LV_{CC} falls to the LV_{CC} stop voltage of 10 V and V_{RT} is lower than $V_{RT,RESET}$ of 0.1 V, the protection is reset. The FSFR-HS resumes normal operation when LV_{CC} reaches the start voltage of 12.5 V.

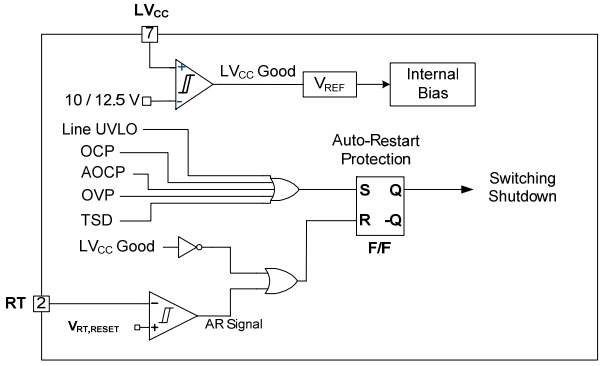

Figure 24. Protection Blocks

5.1 Over-Current Protection (OCP): When the sensing pin voltage drops below -0.58 V and its duration becomes more than OCP blanking time of 1.5 µs, OCP is triggered and the MOSFETs remain off.

5.2 Abnormal Over-Current Protection (AOCP): If the secondary rectifier diodes are shorted, large current with extremely high di/dt can flow through the MOSFET before OCP is triggered. AOCP is triggered without shutdown delay if the sensing pin voltage drops below -0.9 V.

5.3 Over-Voltage Protection (OVP): When the LV_{CC} reaches 23 V, OVP is triggered. This protection is used when auxiliary winding of the transformer supplies V_{CC} to the FPS™.

5.4 Thermal Shutdown (TSD): The MOSFETs and the control IC in one package make it easier for the control IC to detect the abnormal over-temperature of the MOSFETs. If the temperature exceeds approximately 130°C, thermal shutdown triggers.

6. Line Under-Voltage Lockout (UVLO): FSFR-HS includes precise line UVLO (or brownout) with programmable hysteresis voltage. This function can start or restart the IC when V_{LS} for the scale-down voltage of the DC-link by the sensing resistors, R1 and R2, is higher than V_{LINE} of 2.5 V as the DC-link voltage increases and vice versa. A hysteresis voltage between the start and stop voltage of the IC is programmable by I_{LINE}. In normal operation, the comparator's output is HIGH and I_{LINE} is deactivated so that a voltage on LS pin, $V_{LS,}$ can be obtained as a divided voltage by R1 and R2. On the contrary, I_{LINE} is activated when the comparator's output is LOW. V_{LS} is generated by the difference between the current through R1 and I_{LINE}.

C_{Filter} can be used to reduce some noise induced from transformer or switching transition. Generally, hundreds of pico-farad to tens of nano-farad is adequate, depending on the quantity of noise.

The start and stop input-voltage can be calculated as:

$$V_{dc-link,STOP} = V_{LINE} \times \frac{R1+R2}{R2} \ [V] \quad (6)$$

$$V_{dc-link,START} = V_{dc-link,STOP} + I_{LINE} \times R1 \ [V] \quad (7)$$

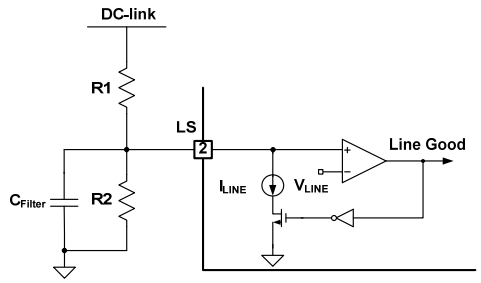

Figure 25. Half-Wave Sensing

7. Simple Remote-On/Off: The power stage can be shutdown with optional Auto-Restart Mode, as shown in Figure 26.

To configure an external protection with Auto-Restart Mode, an opto-coupler and the LS pin are used. When the voltage on the LS pin is pulled below V_{LINE} (2.5 V), the IC stops during the status holds. However, the opto-coupler stops pulling down and the IC can perform the auto-restart operation itself.

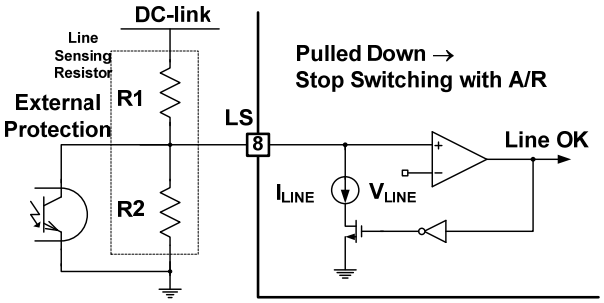

Figure 26. External Protection Circuits

8. Current-Sensing Methods: FSFR-HS series employs negative voltage sensing to detect the drain current of MOSFET, which allows a low-noise resistive sensing using a filter with low time-constant and capacitive sensing method.

8.1 Resistive Sensing Method: The IC can sense drain current as a negative voltage, as shown in Figure 27 and Figure 28. Half-wave sensing allows low power dissipation in the sensing resistor; while full-wave sensing has less switching noise in the sensing signal. For a time constant range for the filter, 3/100~1/10 of the operating frequency is reasonable.

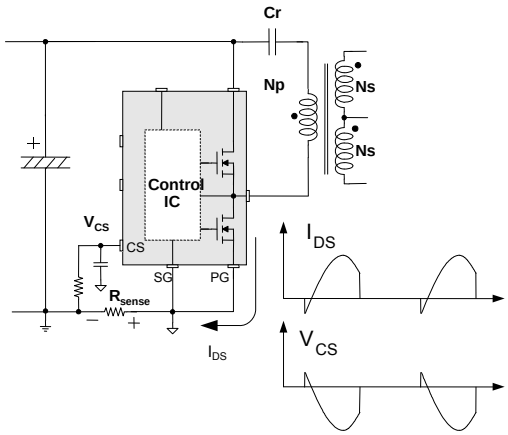

Figure 27. Half-Wave Sensing

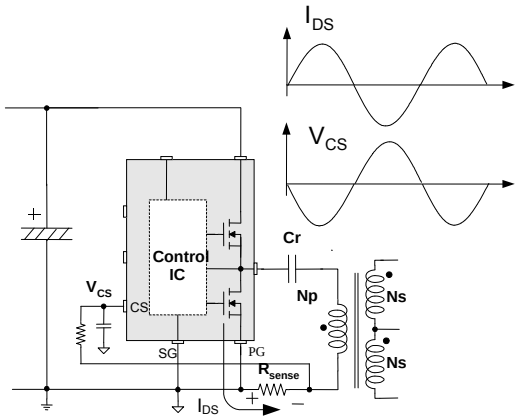

Figure 28. Full-Wave Sensing

8.2 Capacitive Sensing Method: The drain current can be sensed using an additional capacitor parallel with the resonant capacitor, as shown in Figure 29. During the low-side switch turn on, the current, i_{CB} through C_B, makes V_{SENSE} across R_{SENSE}. The i_{CB} is scale-down of i_p by the impedance ratio of C_r and C_B. Generally, 1/100~1/1000 is adequate for the ratio of C_B against C_r. R_D is used as a damper for reducing noise generated by switching transition. Several hundreds of ohm to a few of kilo-ohms can be normally used.

V_{SENSE} can be estimated as;

$$V_{sense} = I_{Cr}{}^{pk} \frac{C_B}{Cr} \cdot R_{sense} [V] \quad (8)$$

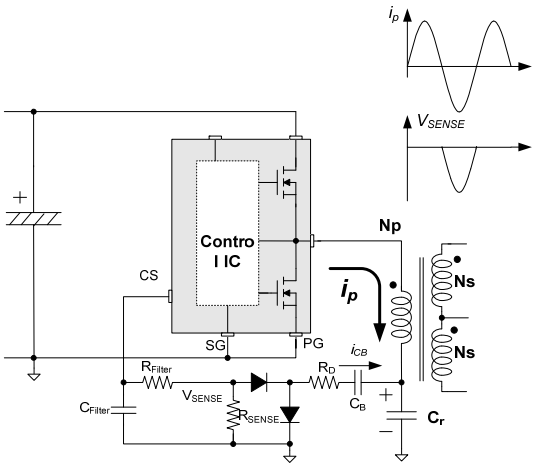

Figure 29. Capacitive Sensing

9. PCB Layout Guidelines: Duty imbalance problems may occur due to the radiated noise from the main transformer, the inequality of the secondary side leakage inductances of main transformer, and so on. This is one of the reasons that the control components in the vicinity of the RT pin are enclosed by the primary current flow pattern on PCB layout. The direction of the magnetic field on the components caused by the primary current flow is changed when the high- and low-side MOSFET turn on by turns. The magnetic fields with opposite directions induce a current through, into, or out of the RT pin, which makes the turn-on duration of each MOSFET different. It is strongly recommended to separate the control components in the vicinity of the RT pin from the primary current flow pattern in the PCB layout. Figure 30 shows an example for a duty-balanced case.

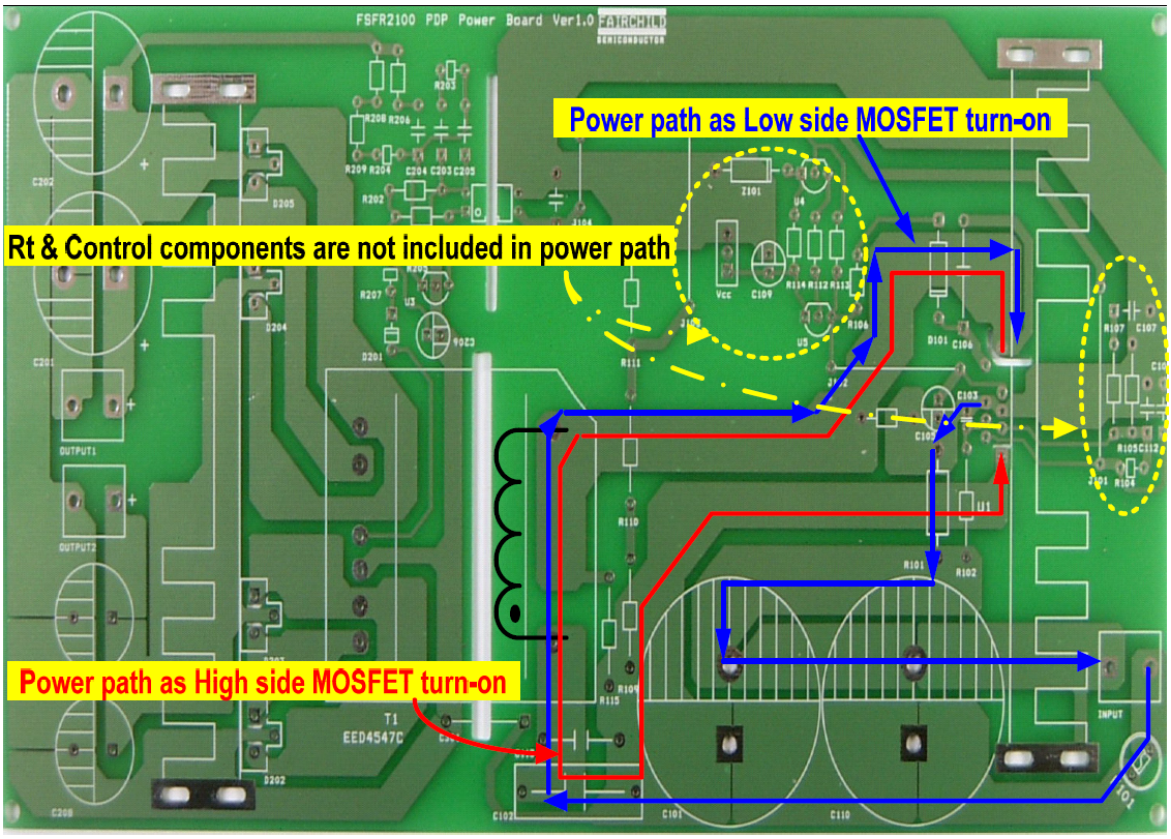

Figure 30. Example of Duty Balancing

Physical Dimensions

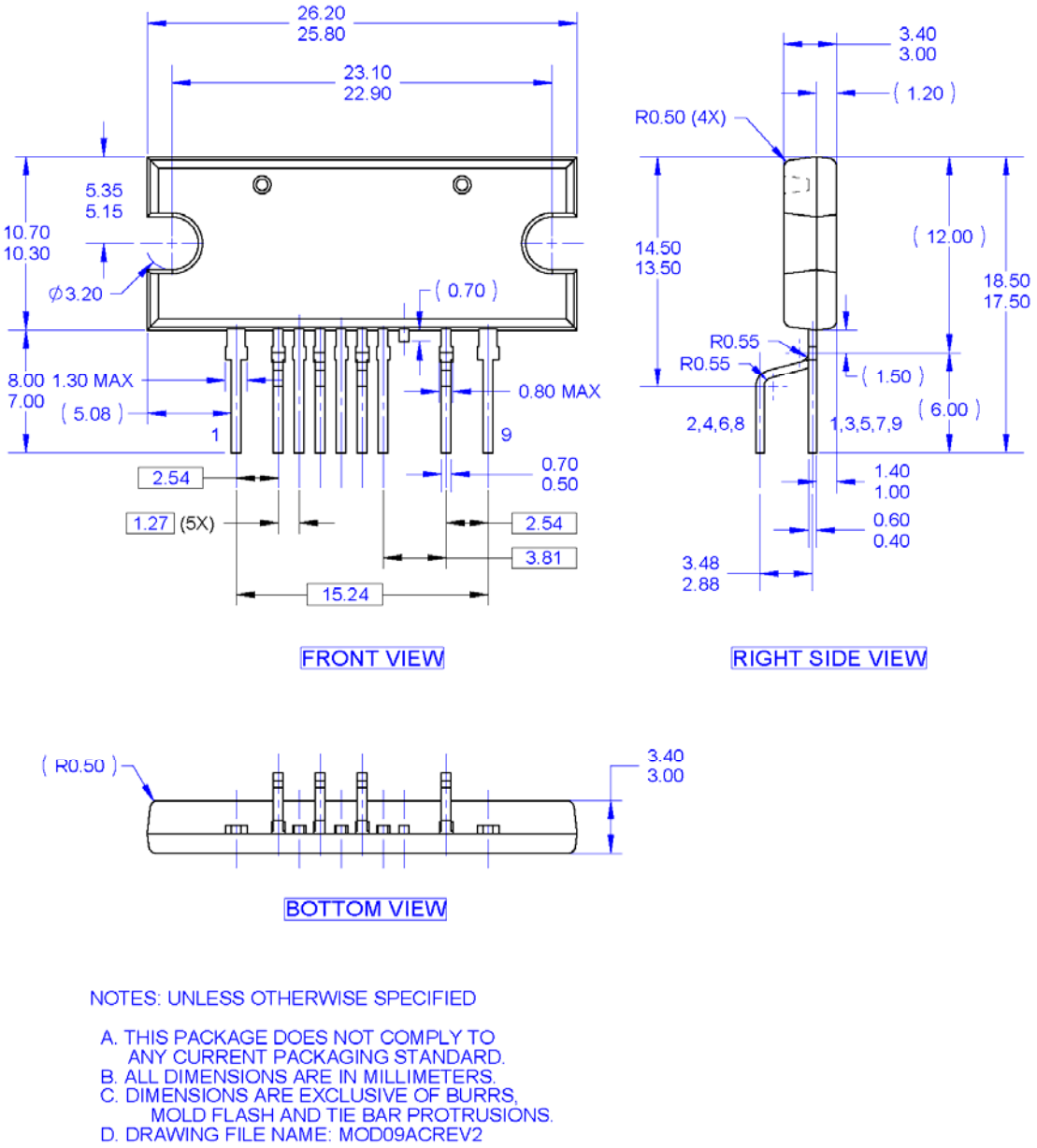

Figure 31. 9-Lead, Single Inline Package (SIP)

Package drawings are provided as a service to customers considering Fairchild components. Drawings may change in any manner without notice. Please note the revision and/or date on the drawing and contact a Fairchild Semiconductor representative to verify or obtain the most recent revision. Package specifications do not expand the terms of Fairchild's worldwide terms and conditions, specifically the warranty therein, which covers Fairchild products.

Always visit Fairchild Semiconductor's online packaging area for the most recent package drawings: http://www.fairchildsemi.com/packaging/.

Physical Dimensions

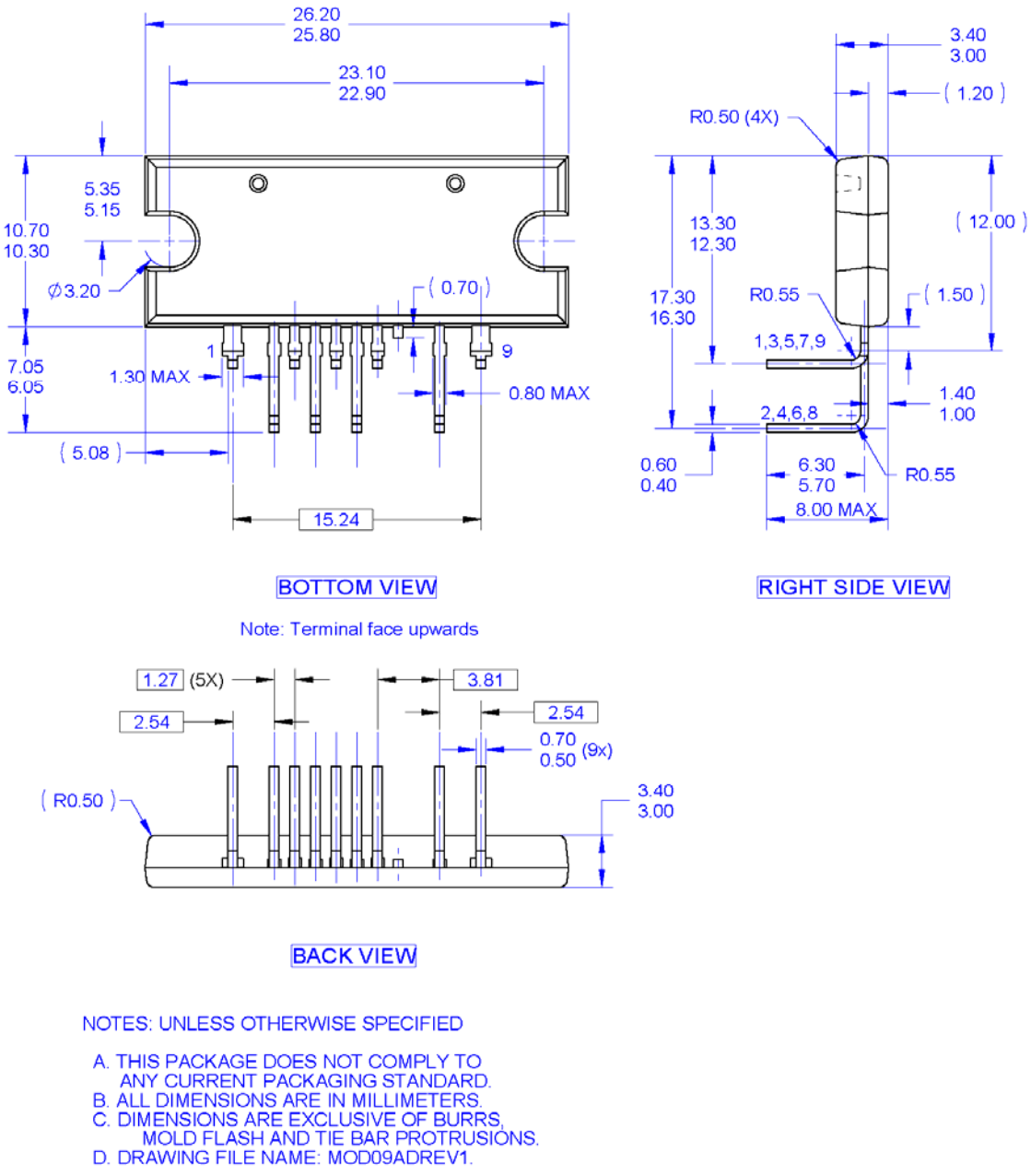

NOTES: UNLESS OTHERWISE SPECIFIED

A. THIS PACKAGE DOES NOT COMPLY TO ANY CURRENT PACKAGING STANDARD.
B. ALL DIMENSIONS ARE IN MILLIMETERS.
C. DIMENSIONS ARE EXCLUSIVE OF BURRS, MOLD FLASH AND TIE BAR PROTRUSIONS.
D. DRAWING FILE NAME: MOD09ADREV1.

Figure 32. 9-Lead, Single Inline Package (SIP), L-Forming

Package drawings are provided as a service to customers considering Fairchild components. Drawings may change in any manner without notice. Please note the revision and/or date on the drawing and contact a Fairchild Semiconductor representative to verify or obtain the most recent revision. Package specifications do not expand the terms of Fairchild's worldwide terms and conditions, specifically the warranty therein, which covers Fairchild products.

Always visit Fairchild Semiconductor's online packaging area for the most recent package drawings: http://www.fairchildsemi.com/packaging/.

FAIRCHILD SEMICONDUCTOR®

TRADEMARKS

The following includes registered and unregistered trademarks and service marks, owned by Fairchild Semiconductor and/or its global subsidiaries, and is not intended to be an exhaustive list of all such trademarks.

2Cool™
AccuPower™
AX-CAP®*
BitSiC™
Build it Now™
CorePLUS™
CorePOWER™
CROSSVOLT™
CTL™
Current Transfer Logic™
DEUXPEED®
Dual Cool™
EcoSPARK®
EfficientMax™
ESBC™
F®
Fairchild®
Fairchild Semiconductor®
FACT Quiet Series™
FACT®
FAST®
FastvCore™
FETBench™
FPS™
F-PFS™
FRFET®
Global Power Resource℠
GreenBridge™
Green FPS™
Green FPS™ e-Series™
G*max*™
GTO™
IntelliMAX™
ISOPLANAR™
Making Small Speakers Sound Louder and Better™
MegaBuck™
MICROCOUPLER™
MicroFET™
MicroPak™
MicroPak2™
MillerDrive™
MotionMax™
mWSaver™
OptoHiT™
OPTOLOGIC®
OPTOPLANAR®
PowerTrench®
PowerXS™
Programmable Active Droop™
QFET®
QS™
Quiet Series™
RapidConfigure™
™
Saving our world, 1mW/W/kW at a time™
SignalWise™
SmartMax™
SMART START™
Solutions for Your Success™
SPM®
STEALTH™
SuperFET®
SuperSOT™-3
SuperSOT™-6
SuperSOT™-8
SupreMOS®
SyncFET™
Sync-Lock™
SYSTEM GENERAL®*
TinyBoost™
TinyBuck™
TinyCalc™
TinyLogic®
TINYOPTO™
TinyPower™
TinyPWM™
TinyWire™
TranSiC™
TriFault Detect™
TRUECURRENT®*
µSerDes™
µSerDes™
UHC®
Ultra FRFET™
UniFET™
VCX™
VisualMax™
VoltagePlus™
XS™

* Trademarks of System General Corporation, used under license by Fairchild Semiconductor.

DISCLAIMER

FAIRCHILD SEMICONDUCTOR RESERVES THE RIGHT TO MAKE CHANGES WITHOUT FURTHER NOTICE TO ANY PRODUCTS HEREIN TO IMPROVE RELIABILITY, FUNCTION, OR DESIGN. FAIRCHILD DOES NOT ASSUME ANY LIABILITY ARISING OUT OF THE APPLICATION OR USE OF ANY PRODUCT OR CIRCUIT DESCRIBED HEREIN, NEITHER DOES IT CONVEY ANY LICENSE UNDER ITS PATENT RIGHTS, NOR THE RIGHTS OF OTHERS. THESE SPECIFICATIONS DO NOT EXPAND THE TERMS OF FAIRCHILD'S WORLDWIDE TERMS AND CONDITIONS, SPECIFICALLY THE WARRANTY THEREIN, WHICH COVERS THESE PRODUCTS.

LIFE SUPPORT POLICY

FAIRCHILD'S PRODUCTS ARE NOT AUTHORIZED FOR USE AS CRITICAL COMPONENTS IN LIFE SUPPORT DEVICES OR SYSTEMS WITHOUT THE EXPRESS WRITTEN APPROVAL OF FAIRCHILD SEMICONDUCTOR CORPORATION.

As used herein:

1. Life support devices or systems are devices or systems which, (a) are intended for surgical implant into the body or (b) support or sustain life, and (c) whose failure to perform when properly used in accordance with instructions for use provided in the labeling, can be reasonably expected to result in a significant injury of the user.
2. A critical component in any component of a life support, device, or system whose failure to perform can be reasonably expected to cause the failure of the life support device or system, or to affect its safety or effectiveness.

ANTI-COUNTERFEITING POLICY

Fairchild Semiconductor Corporation's Anti-Counterfeiting Policy. Fairchild's Anti-Counterfeiting Policy is also stated on our external website, www.fairchildsemi.com, under Sales Support.

Counterfeiting of semiconductor parts is a growing problem in the industry. All manufacturers of semiconductor products are experiencing counterfeiting of their parts. Customers who inadvertently purchase counterfeit parts experience many problems such as loss of brand reputation, substandard performance, failed applications, and increased cost of production and manufacturing delays. Fairchild is taking strong measures to protect ourselves and our customers from the proliferation of counterfeit parts. Fairchild strongly encourages customers to purchase Fairchild parts either directly from Fairchild or from Authorized Fairchild Distributors who are listed by country on our web page cited above. Products customers buy either from Fairchild directly or from Authorized Fairchild Distributors are genuine parts, have full traceability, meet Fairchild's quality standards for handling and storage and provide access to Fairchild's full range of up-to-date technical and product information. Fairchild and our Authorized Distributors will stand behind all warranties and will appropriately address any warranty issues that may arise. Fairchild will not provide any warranty coverage or other assistance for parts bought from Unauthorized Sources. Fairchild is committed to combat this global problem and encourage our customers to do their part in stopping this practice by buying direct or from authorized distributors.

PRODUCT STATUS DEFINITIONS

Definition of Terms

Datasheet Identification	Product Status	Definition
Advance Information	Formative / In Design	Datasheet contains the design specifications for product development. Specifications may change in any manner without notice.
Preliminary	First Production	Datasheet contains preliminary data; supplementary data will be published at a later date. Fairchild Semiconductor reserves the right to make changes at any time without notice to improve design.
No Identification Needed	Full Production	Datasheet contains final specifications. Fairchild Semiconductor reserves the right to make changes at any time without notice to improve the design.
Obsolete	Not In Production	Datasheet contains specifications on a product that is discontinued by Fairchild Semiconductor. The datasheet is for reference information only.

Rev. I64

ON Semiconductor and ON are trademarks of Semiconductor Components Industries, LLC dba ON Semiconductor or its subsidiaries in the United States and/or other countries. ON Semiconductor owns the rights to a number of patents, trademarks, copyrights, trade secrets, and other intellectual property. A listing of ON Semiconductor's product/patent coverage may be accessed at www.onsemi.com/site/pdf/Patent−Marking.pdf. ON Semiconductor reserves the right to make changes without further notice to any products herein. ON Semiconductor makes no warranty, representation or guarantee regarding the suitability of its products for any particular purpose, nor does ON Semiconductor assume any liability arising out of the application or use of any product or circuit, and specifically disclaims any and all liability, including without limitation special, consequential or incidental damages. Buyer is responsible for its products and applications using ON Semiconductor products, including compliance with all laws, regulations and safety requirements or standards, regardless of any support or applications information provided by ON Semiconductor. "Typical" parameters which may be provided in ON Semiconductor data sheets and/or specifications can and do vary in different applications and actual performance may vary over time. All operating parameters, including "Typicals" must be validated for each customer application by customer's technical experts. ON Semiconductor does not convey any license under its patent rights nor the rights of others. ON Semiconductor products are not designed, intended, or authorized for use as a critical component in life support systems or any FDA Class 3 medical devices or medical devices with a same or similar classification in a foreign jurisdiction or any devices intended for implantation in the human body. Should Buyer purchase or use ON Semiconductor products for any such unintended or unauthorized application, Buyer shall indemnify and hold ON Semiconductor and its officers, employees, subsidiaries, affiliates, and distributors harmless against all claims, costs, damages, and expenses, and reasonable attorney fees arising out of, directly or indirectly, any claim of personal injury or death associated with such unintended or unauthorized use, even if such claim alleges that ON Semiconductor was negligent regarding the design or manufacture of the part. ON Semiconductor is an Equal Opportunity/Affirmative Action Employer. This literature is subject to all applicable copyright laws and is not for resale in any manner.

PUBLICATION ORDERING INFORMATION

LITERATURE FULFILLMENT:
Literature Distribution Center for ON Semiconductor
19521 E. 32nd Pkwy, Aurora, Colorado 80011 USA
Phone: 303−675−2175 or 800−344−3860 Toll Free USA/Canada
Fax: 303−675−2176 or 800−344−3867 Toll Free USA/Canada
Email: orderlit@onsemi.com

N. American Technical Support: 800−282−9855 Toll Free USA/Canada
Europe, Middle East and Africa Technical Support:
Phone: 421 33 790 2910
Japan Customer Focus Center
Phone: 81−3−5817−1050

ON Semiconductor Website: **www.onsemi.com**

Order Literature: http://www.onsemi.com/orderlit

For additional information, please contact your local Sales Representative