KEMET Part Number: C315C103M5U5TA

Ceramic, GoldMax, 0.01 uF, 20%, 50 V, Z5U, GoldMax, Commercial Standard, Lead Spacing = 2.54mm

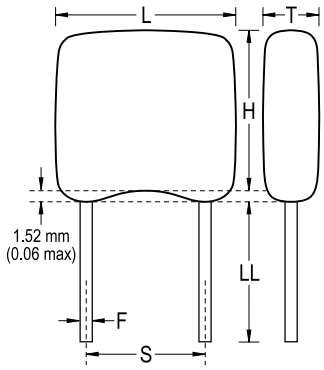

General Information	
Style:	Radial
Series:	GoldMax
Description:	GoldMax, Commercial Standard
RoHS:	Yes
Termination:	Tin
Failure Rate:	N/A
Halogen Free:	Yes

Dimensions	
L	3.81mm MAX
H	3.14mm MAX
T	2.54mm MAX
S	2.54mm +/-0.78mm
LL	7mm MIN
F	0.51mm +0.1/-0.025mm

Specifications	
Capacitance:	0.01 uF
Capacitance Tolerance:	20%
Voltage DC:	50 VDC
Dielectric Withstanding Voltage:	125 V
Temperature Range:	+10/+85C
Temperature Coefficient:	Z5U
Dissipation Factor:	4% 25C
Aging Rate:	7% Loss/Decade Hour
Insulation Resistance:	10 GOhms

Packaging Specifications	
Packaging:	Bulk, Bag
Packaging Quantity:	500

Statements of suitability for certain applications are based on our knowledge of typical operating conditions for such applications, but are not intended to constitute - and we specifically disclaim - any warranty concerning suitability for a specific customer application or use. This Information is intended for use only by customers who have the requisite experience and capability to determine the correct products for their application. Any technical advice inferred from this Information or otherwise provided by us with reference to the use of our products is given gratis, and we assume no obligation or liability for the advice given or results obtained.

© 2006 - 2017 IntelliData.net