MCM CUSTOM AUDIO

www.mcmelectronics.com

Model Number:	**50-14010**
6.5" 2-Way In-Ceiling Speaker System	
6.5" Woofer With PP Cone & Rubber Surround	
1" Voice Coil, 11oz Magnet	
1/2" High Compliance Polymer Tweeter	
High Impact ABS Plastic Frame	
60 Watts Max	
6dB/Octave Crossover	
Frequency Response: 45Hz ~ 20KHz (-3dB)	
Sensitivity: 89dB (M/W)	
Impedance: 8 Ohm	

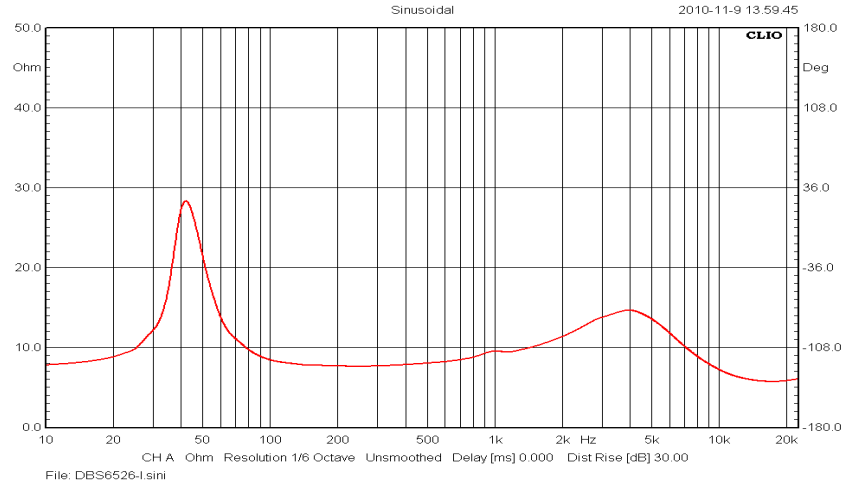

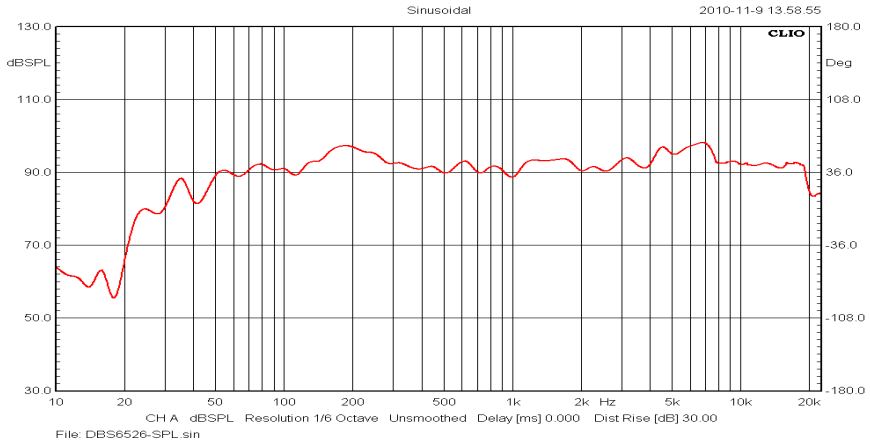

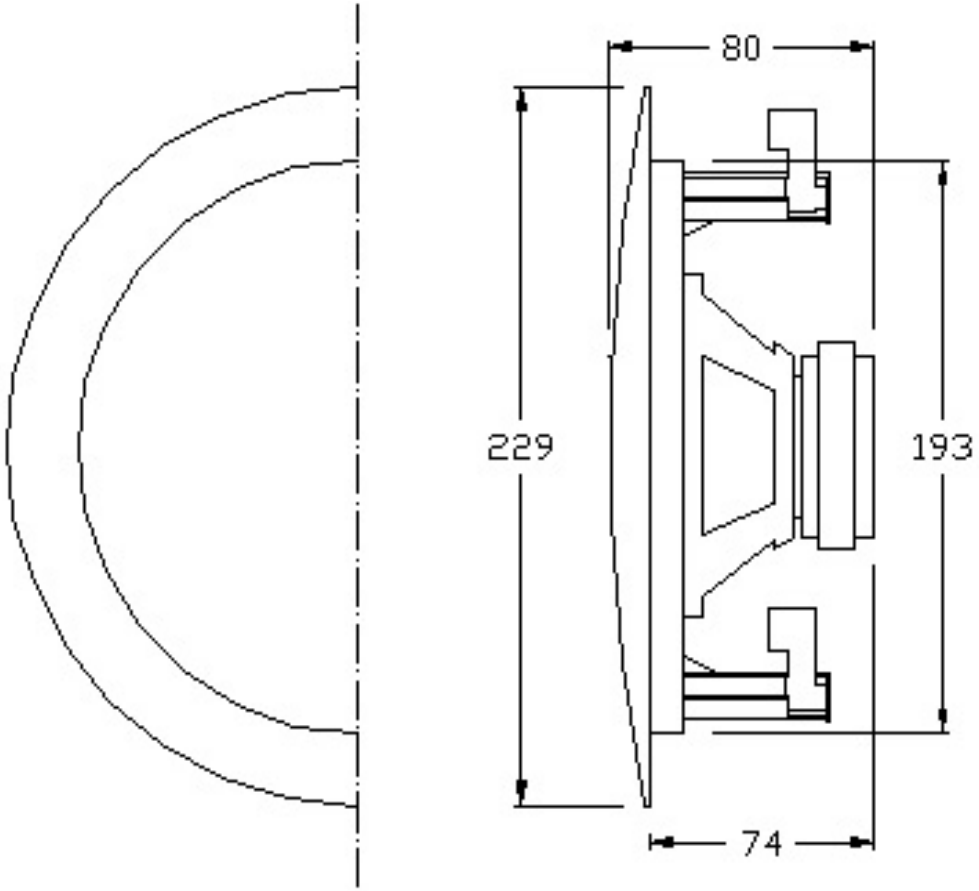

ALL DIMENSIONS ARE IN MILLIMETERS