Rev	C□	Date	ENE Review	QA Review	Approved	Drn
Release		2014-01-20				

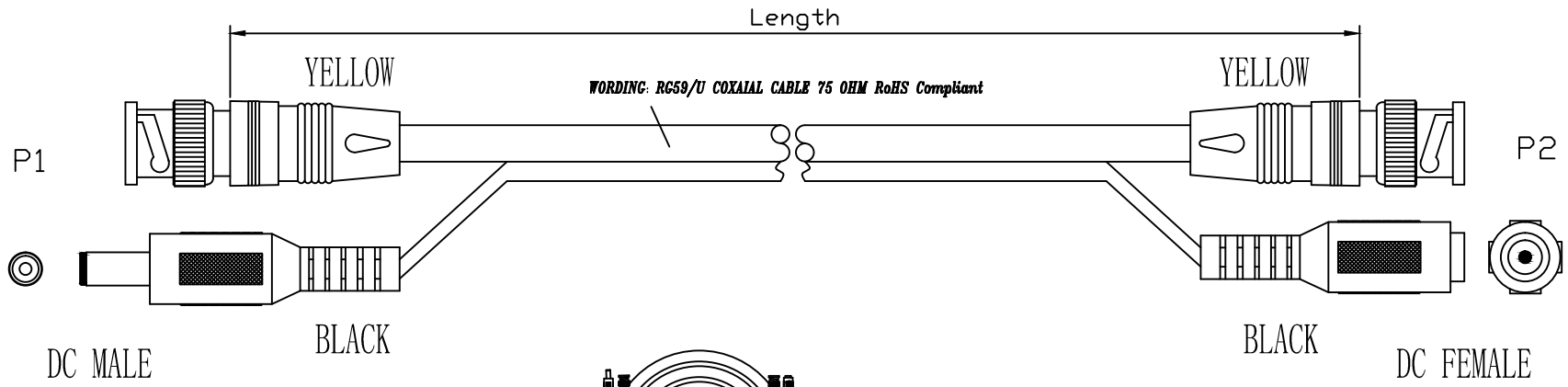

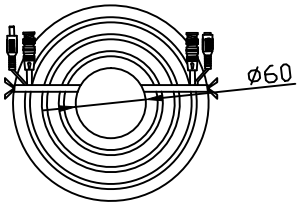

Rolling size

PRODUCT FAMILY	
Model No.	Length
42-2150B	45600±400
42-2100B	30400±250
42-2075B	22800±200
42-2050B	15200±150
42-2035B	10600±100
42-2025B	7600±50

NO.	PART NAME	MATERIAL	Q'TY	REMARKS
4	DC FEMALE	PVC BLACK	1	NICKEL
3	DC MALE	PVC BLACK	1	NICKEL
2	BNC MALE	WELDED PVC YELL□W	2	NICKEL
1	CABLE	1*0.643CU+FPE3.7+48*0.10CU+□D5.9+ 18*0.12CU+SPE1.8+32*0.12CU+□D3.2 Flexible PVC Jacket	1	BLACK

SCALE	1:1	UNITS	mm						ED	2014-01-20	SHEET N□. 1/1