Product Change Notice

PCN-297-170726-0009

PCN Details:			
PCN Document No.	PCN-297-170726-0009	**Date of PCN:**	26/07/2017
PCN issued by:	R.Allcott	**PCN valid as of:**	27/07/2017

Dear Valued Customer

In January 2007 our supplier of part EKL E phased that range out and are now using reference EKL S with the rounded ground base. The following part number are those affected

1277-ELK , 1277-FN .
All ratings remain the same as shown below.

Description of Change:

Old parts raised and level base option.

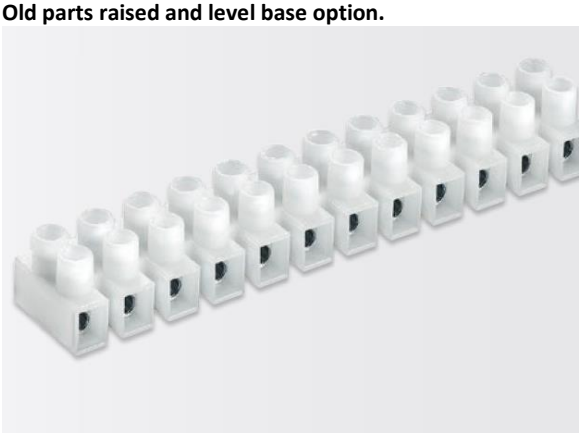

Ratings according to EN 60 998
Nominal voltage: 450V
Nominal clamping area: 2,5 s -10 s
Ambient temperature: T80
Glow wire temperature: 850°C

New parts

Ratings according to EN 60 998
Nominal voltage: 450V
Nominal clamping area: 2,5 s -10 s
Ambient temperature: T80
Glow wire temperature: 850°C

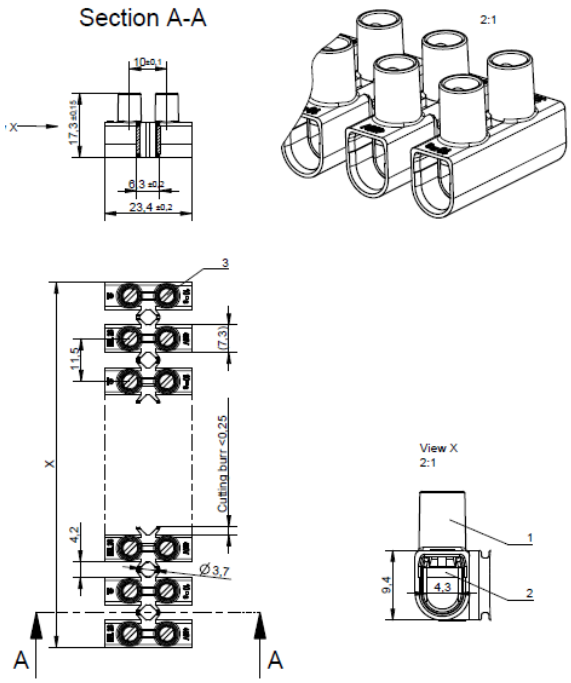

Power and productivity
for a better world™