MCM Relay Quick Reference Sheet

This instruction sheet is intended to provide information additional to that provided on the manufacturer's specification sheet. Extreme care should be taken when working with these relay devices, as potentially lethal voltages exist at exposed contact points. It is the responsibility of the user to determine appropriate application of this product and ensure that installation will not create a hazard to users or other equipment.

General Purpose Relays

The following relay models are commonly used for standard switching and control applications. Each consists of two contacts for connection of supply voltage, with normally open (NO) and normally closed (NC) output contacts as shown. They are compatible with standard 8–pin and 11–pin relay sockets, with pin–out matching industry standard models.

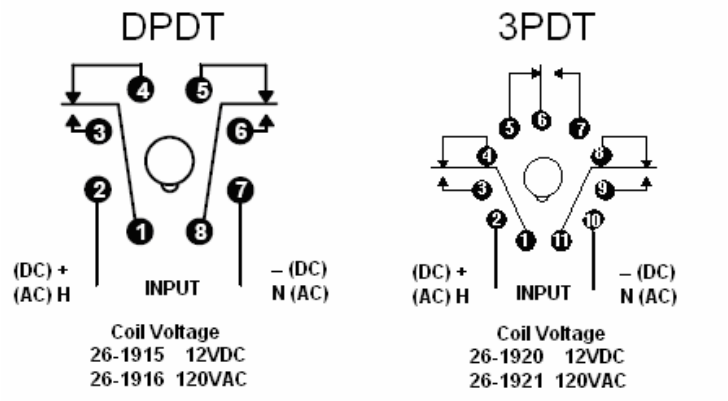

Specifications

Model	Pins	Type	Coil	Coil Current	Contact Rating	Coil Resistance
26-1915	8	DPDT	12VDC	130mA	10A	92.3Ω
26-1916	8	DPDT	120VAC	25mA	10A	480.0 Ω
26-1920	11	3PDT	12VDC	140mA	10A	85.7 Ω
26-1921	11	3PDT	120VAC	25mA	10A	480.0 Ω

Sockets

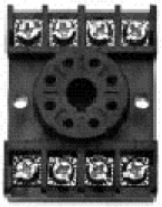
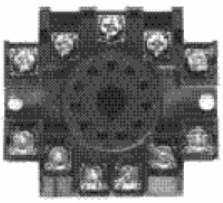

In-Line

Model #	Type
26-1930	8–Pin
26-1940	11-Pin

DIN Rail/Surface Mount

Model #	Type
26-1925	8–Pin
26-1935	11–Pin

MCM, an InOne company
650 Congress Park Drive
Centerville, Ohio 45459
www.mcminone.com