Digital Clamp meter

Model: 72-7228

SAFETY INFORMATION

Please read these instructions carefully before use and retain for future reference.

This meter is designed to meet IEC61010-1, 61010-2-032, and 61010-2-033 in Pollution Degree 2, Measurement Category (CAT II 600V, CAT III 300V) and double Insulation.

- Do not operate the meter or use test leads if they appear damaged, or if the meter is not operating properly.
- There are no user-serviceable parts in this product. Refer servicing to qualified personnel.
- Do not apply voltage between the COM and OHM terminals, while in the resistance measuring state.
- Do not measure current with the test leads inserted into the voltage or OHM terminals.
- To avoid electrical shock and personal injury, do not attempt to measure voltage higher than 600V AC/DC, although the readings may be obtained.
- Do not expose the instrument to direct sunlight, extreme temperature or humidity.
- Before measuring current, check the fuses and turn the power to the circuit off before connecting the meter to the circuit.
- To prevent damage to the meter, range or mode changes should not be made during measurement.
- Disconnect circuit power and discharge all high voltage capacitors before testing continuity. diode, resistance, capacitance or current.
- Do not use the meter around explosive gas or vapour.
- When using the test leads, keep your fingers behind the finger guards.
- Remove test leads from the meter before opening the meter case or battery door.
- Never operate the meter with the cover removed or the battery door open.
- Use only the test leads supplied or the protection may be impaired.
- Probe assemblies for mains measurements shall be rated as appropriate for measurement category III according to IEC 61010-031 and shall have a voltage rating of at least the voltage of the circuit to be measured.
- Replace the batteries as soon as the low battery indicator appears on the display.
- Remove dead batteries from the meter or if it is not going to be used for a long time.
- Never dispose of batteries in a fire, or attempt to recharge ordinary batteries.
- Before replacing the battery, turn off the meter and disconnect all the test probes.
- To prolong battery life turn off the meter after use.

WHAT'S INCLUDED

- Digital multimeter
- Storage case
- User manual
- Test leads
- 9V Battery (NEDA1604A or 6LF22)

SYMBOL GUIDE

~	AC (Alternating Current)
⎓	DC (Direct Current)
≂	AC or DC
⏚	Grounding
⧈	Double insulated
⚠	Warning
	Low battery
•)))	Continuity buzzer
	Diode
	Fuse
	Capacitance test
CE	Conforms to European Union directives

FUNCTIONS

1. Hands guard: protects hands from touching the dangerous area.
2. Trigger: press and release the trigger to open and close the detector jaw.
3. Function buttons x 3
4. Input terminals
5. LCD Display
6. Range selector
7. Detector jaw: designed to pick up the AC current flowing through the conductor.

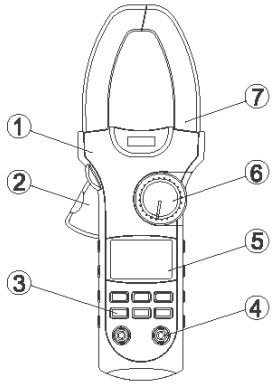

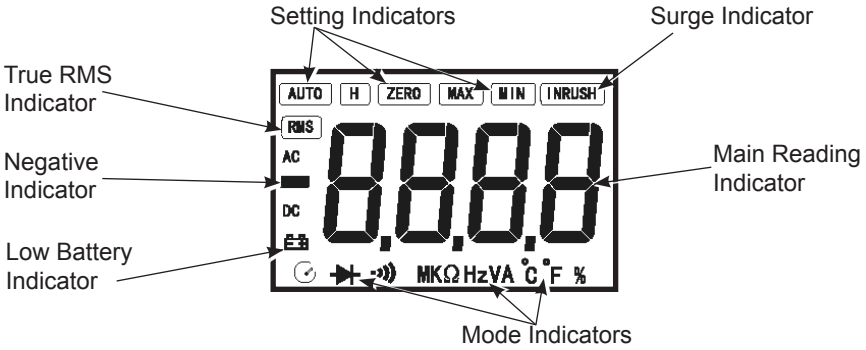

OPERATING PARAMETERS

- Operating temperature: 23°C± 5°C
- Relative Humidity: ≤80%.
- Temperature Coefficient: 0.1× (specified accuracy)/1°C

DC VOLTAGE AUTO RANGING

Range	Resolution	Accuracy	Overload Protection
6.600V	1mV	±(0.8%+1)	600V DC/AC
66.00V	10mV		
600.0V	100mV		

Note: The input impedance is 10MΩ.

AC VOLTAGE AUTO RANGING

Range	Resolution	Accuracy	Overload Protection
6.600V	1mV	±(1.2%+5)	600V DC/AC
66.00V	10mV		
600.0V	100mV		

Notes:

- Input Impedance: 10MΩ
- Frequency Response: 40Hz~400Hz
- Change to AC:
  Combine AC and True RMS response method. Input sine wave to adjust.
  Non sine wave signals must be adjusted based on the following data:
  Peak factor: 1.4~2.0, add 1.0% to the stated accuracy
  Peak factor: 2.0~2.5, add 2.5% to the stated accuracy
  Peak factor: 2.5~3.0, add 4.0% to the stated accuracy.

RESISTANCE

Range	Resolution	Accuracy	Overload Protection
660.0Ω	100mΩ	±(1.2%+2)	250VAC
6.600kΩ	1Ω	±(1%+2)	
66.00kΩ	10Ω		
660.0kΩ	100Ω		
6.600MΩ	1kΩ	±(1.2%+2)	
66.00MΩ	10kΩ	±(1.5%+2)	

DIODE AND CONTINUITY

Range	Resolution	Accuracy	Overload Protection
	1mV	0.5V~0.8V (Open circuit voltage approx. 3.0V)	250VAC

Range	Resolution	Accuracy	Overload Protection
•))	0.1Ω	Around ≤30Ω, the buzzer will sound. (Open circuit voltage approx. –1.2V)	250VAC

Notes:

- The open circuit voltage is about 0.45V.
- The buzzer may sound when the resistance of a circuit under test is 30Ω~100Ω.
- The buzzer does not sound when the resistance of a circuit under test is higher than 100Ω.

FREQUENCY

Range	Resolution	Accuracy	Overload Protection
660.0Ω	0.1Hz	±(0.1%+3)	250VAC
6.600kΩ	0.001kHz		
66.00kΩ	0.01kHz		
660.0kΩ	0.1kHz		
6.600MΩ	0.001MHz		
66.00MΩ	0.01MHz		

Notes:

- Input Sensitivity (a) as follows:
  When a ≤10Hz: the meter does not respond
  When 10Hz < a ≤100kHz: ≥300mV rms
  When a >100kHz: ≥600mV rms

DUTY CYCLE

Range	Resolution	Accuracy	Overload Protection
0.1%~99.9%	0.1%	For reference only	250VAC

DC CURRENT

Range	Resolution	Accuracy	Overload Protection
66.00A	0.01A	±(2%+40)	250VAC
1000A	1A	±(2%+8)	

AC CURRENT

Range	Resolution	Accuracy	Frequency response	Overload Protection
66.00A	0.01A	±(2%+40)	50Hz ~ 60Hz	250VAC
1000A	1A	±(2%+8)		

Warning:

- The operating temperature must be 0°C ~ 40°C when measuring current.

OPERATION

Measuring DC/AC Voltage

Warning

- To avoid damage to the meter, or risk of personal injury, do not attempt to measure higher than 600V.
- The DC and AC voltage ranges are 600V, 66V and 6.6V.
- To measure DC or AC voltage, perform the following steps:
  1. Insert the red test lead into the **VΩHz** terminal and the black test lead into the **COM** terminal.
  2. Turn the range selector to V≂
     DC measurement mode and auto ranging is a default. Press **SELECT** to switch to AC measurement mode.
  3. Press **Hz** button to measure frequency or duty cycle, but the frequency or duty cycle readings obtained from this range are only for reference.
  4. Connect the test probes with the object being measured. The measured value shows on the display.
- When voltage measurement has been completed, disconnect the test leads from the circuit under test and remove them from the input terminals.

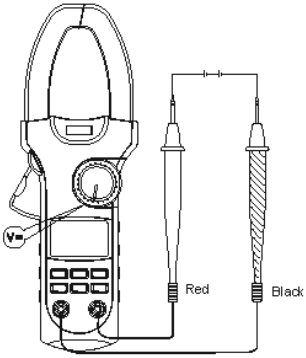

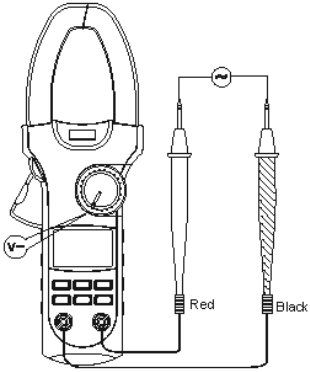

Measuring Resistance

Warning

- To avoid damage to the meter or to the devices under test, disconnect circuit power and discharge all the high-voltage capacitors before measuring resistance.
  The resistance ranges are 660Ω, 6.6kΩ, 660kΩ, 6.6MΩ and 66MΩ.
- To measure the resistance, perform the following steps:
  1. Insert the red test lead into the **VΩHz** terminal and the black test lead into the COM terminal.
  2. Turn the range selector to •))) ➔|**Ω.** Press SELECT to select Ω mode.

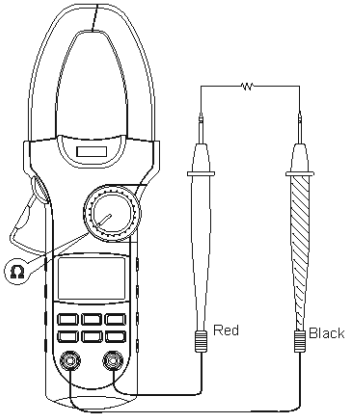

3. Connect the test probes with the object being measured. The measured value shows on the display.

Notes:

- Removing the object under test from its circuit will allow more accurate measurement.
- When resistance measurement has been completed, disconnect the test leads from the circuit under test, and remove them from the input terminals.

Testing Diodes

Warning

- To avoid damage to the meter or to the devices under test, disconnect circuit power and discharge all the high-voltage capacitors before testing diodes.
- Use the diode test mode to check diodes, transistors and other semiconductor devices. In diode test mode, a current is sent through the semiconductor junction and the voltage drop across the junction is measured.
- To test a diode out of a circuit, perform the following steps:
  1. Insert the red test lead into the **VΩHz** terminal and the black test lead into the **COM** terminal.
  2. Turn the range selector to **•))►+Ω.** Press **SELECT** to switch to diode measurement mode.
  3. For forward voltage drop readings on any semiconductor component, connect the red test probe to the component's anode and the black test probe to the cathode.

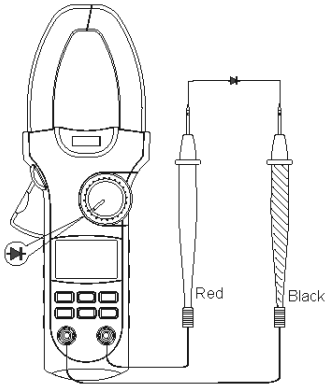

Notes:

- In a circuit, a good diode should still produce a forward voltage drop reading of 0.5V to 0.8; however, the reverse voltage drop reading can vary depending on the resistance of other pathways between the probe tips.
- The unit of diode is volt (V), displaying the forward voltage drop readings.
- To obtain a more precise reading, you could remove the object being measured from the circuit when measuring.
- When diode testing has been completed, disconnect the test leads from the circuit under test, and remove them from the input terminals.

Measuring Continuity

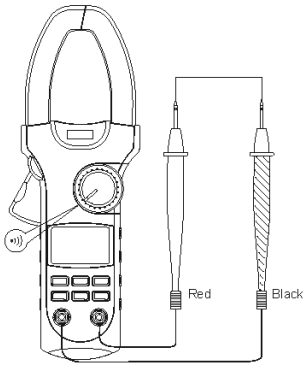

- To test continuity, perform the following steps:
  1. Insert the red test lead into the **VΩHz** terminal and the black test lead into the **COM** terminal.
  2. Turn the range selector to **•))►+Ω** and press **SELECT •))** button to choose the continuity measurement mode.
- The buzzer will sound if the resistance of a circuit under test is less than 30Ω.
- The buzzer may sound if the resistance of a circuit under test is between 30Ω and 100Ω.

- The buzzer does not sound if the resistance of a circuit under test is higher than 100Ω.
- When continuity testing has been completed, disconnect the test leads from the circuit under test and remove the test leads from the input terminals.

Measuring Frequency

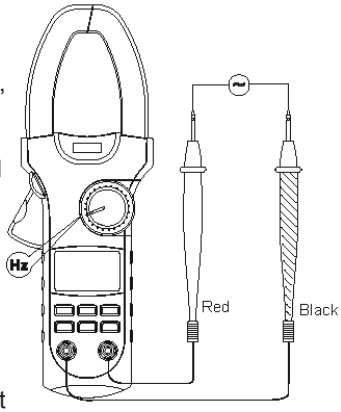

- The frequency ranges are 660Hz, 6.6kHz, 66kHz, 6.6MHz and 66MHz.
- To test frequency, perform the following steps:
  1. Insert the red test lead into the **VΩHz** terminal and the black test lead into the **COM** terminal.
  2. Turn the range selector to %**Hz** and press **SELECT** button to choose the Hz measurement mode.
  3. Connect the test leads across the object being measured.
- When continuity testing has been completed, disconnect the test leads from the circuit under test and remove the test leads from the input terminals.

Duty Cycle Measurement

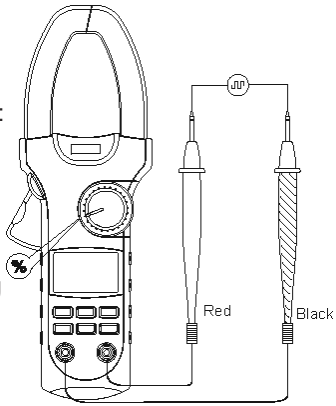

- The duty cycle range is: 0.1%~99.9%.
- To measure duty cycle, perform the following steps:
  1. Insert the red test lead into the **VΩHz** terminal and the black test lead into the **COM** terminal.
  2. Turn the range selector to %**Hz** and press **SELECT** button to choose the **%** measurement mode.
  3. Connect the test leads across the object being measured.
- When duty cycle measurement has been completed, disconnect the test leads from the circuit under test and remove the test leads from the input terminals.

Measuring DC Current

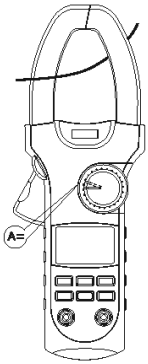

Warning

- To avoid electric shock, never measure current while the test leads are inserted into the input terminals.
- The measurement ranges of current are 66A and 1000A.
- To measure current, do the following:
  1. Set the range selector to 66A ⎓ or 1000A ⎓
  2. Press the trigger to open the detector jaw.
  3. Center the conductor within the detector jaw then release the trigger gently until fully closed. Make sure the conductor remains centrally through the jaws during measurement.

- The measured value shows on the display, it is an effective value of sine wave (mean value response).

Note:

- If the meter does not display 00.00 when 66A ⎓ range, press ZERO to reset. The ZERO button is then inoperative.
- When current measurement has been completed, press the jaw lever to open the jaw and remove the conductor from the meter.

Measuring AC Current

Warning

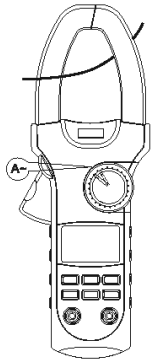

- To avoid electric shock, never measure current while the test leads are inserted into the input terminals.
- The measurement ranges of current are 66A~ and 1000A~.
- To measure current, do the following:
  1. Set the range selector to 66A~ or 1000A~
  2. Press the trigger to open the detector jaw.
  3. Center the conductor within the detector jaw then release the trigger gently until fully closed. Make sure the conductor remains centrally through the jaws during measurement.
- When the measuring current >1A, press **Hz** button to step through AC current, frequency and duty cycle measurement mode.

Note: the frequency or duty cycle readings obtained from this range is only for reference.

- To measure surge current while in this AC measurement mode and with the conductor still within the jaws do the following:
  1. Set the rotary switch to 1000A~ .
  2. Press **SELECT** when the meter displays the minimum readings. The meter then displays “-----” indicating it is ready to carry out surge current measurement.
  3. Turn on the electrical equipment at this time to measure the momentary start up current.

Note: When the meter is set to surge current measurement, it is locked in the highest measurement range.

Sleep Mode

- To preserve battery life, the meter automatically turns off after 15 minutes of inactivity.
- The meter beeps 3 times one minute before entering sleep mode followed by one long beep just before entering sleep mode.
- The meter can be activated by turning the rotary switch or by pressing any function button when the meter will display the measurement value shown before entering sleep mode.
- To disable the sleep mode feature, pressand hold either MAX/MIN, LIGHT or Hz buttons while turning on the meter.

Specifications

A. General Specifications:

Maximum voltage including transient overvoltage between any terminals and ground:	500V rms.
Auto Polarity Display:	3 5/6 digits LCD display, Maximum display 6666
Overload :	Display OL or –OL
Low battery :	Display
Measurement Speed :	Updates 3 times/second.
Measurement Deviation :	When the conductor being measured is not placed centrally through the jaws during AC current measurement, it will cause 1% reading deviation.
Max. Jaw Size :	2.17” (55mm) diameter.
Projected Max.Current conductor size :	1.77” (45mm) diameter.
Power :	9V battery (6LF22 1604A) x 2off
Battery Life :	typically 150hours (alkaline batteries)
Dimensions (H x W x L) :	105.5 x 285.3 x 44.5mm.
Weight :	Approximate 533g (battery included)

B. Environmental Restrictions:

Altitude :	Operating: 2000m Storage: 10000m
Temperature and humidity:	Operating: 0°C~30°C (≤80% R.H) 30°C~40°C (≤75%R.H) 40°C~50°C (≤45%R.H)
Storage:	-20°C~+60°C (≤80%R.H)

MAINTENANCE

Cleaning

- Clean the meter with a clean, soft cloth.
- Do not use any chemicals, abrasives or solvents that could damage the meter.
- Clean the terminals with a mild detergent, as dirt on the terminals can affect readings.

Replacing the battery

- When the meter displays the low battery symbol, replace the battery immediately in order to maintain normal operation.
- Disconnect and remove all test probes from any live source and the meter.
- Open the battery cover on the rear case with a screwdriver.
- Remove the old battery and fit a new 9V battery into the battery holder.
- Replace the battery cover.

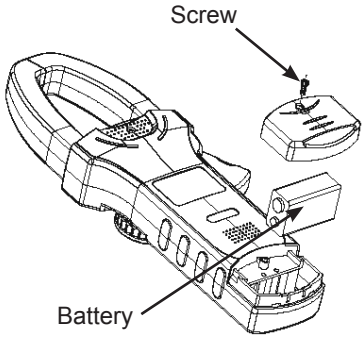

INFORMATION ON WASTE DISPOSAL FOR CONSUMERS OF ELECTRICAL & ELECTRONIC EQUIPMENT

These symbols indicate that separate collection of Waste Electrical and Electronic Equipment (WEEE) or waste batteries is required. Do not dispose of these items with general household waste. Separate for the treatment, recovery and recycling of the materials used. Waste batteries can be returned to any waste battery recycling point which are provided by most battery retailers. Contact your local authority for details of the battery and WEEE recycling schemes available in your area.

Made in China. PR2 9PP

Man Rev 1.0