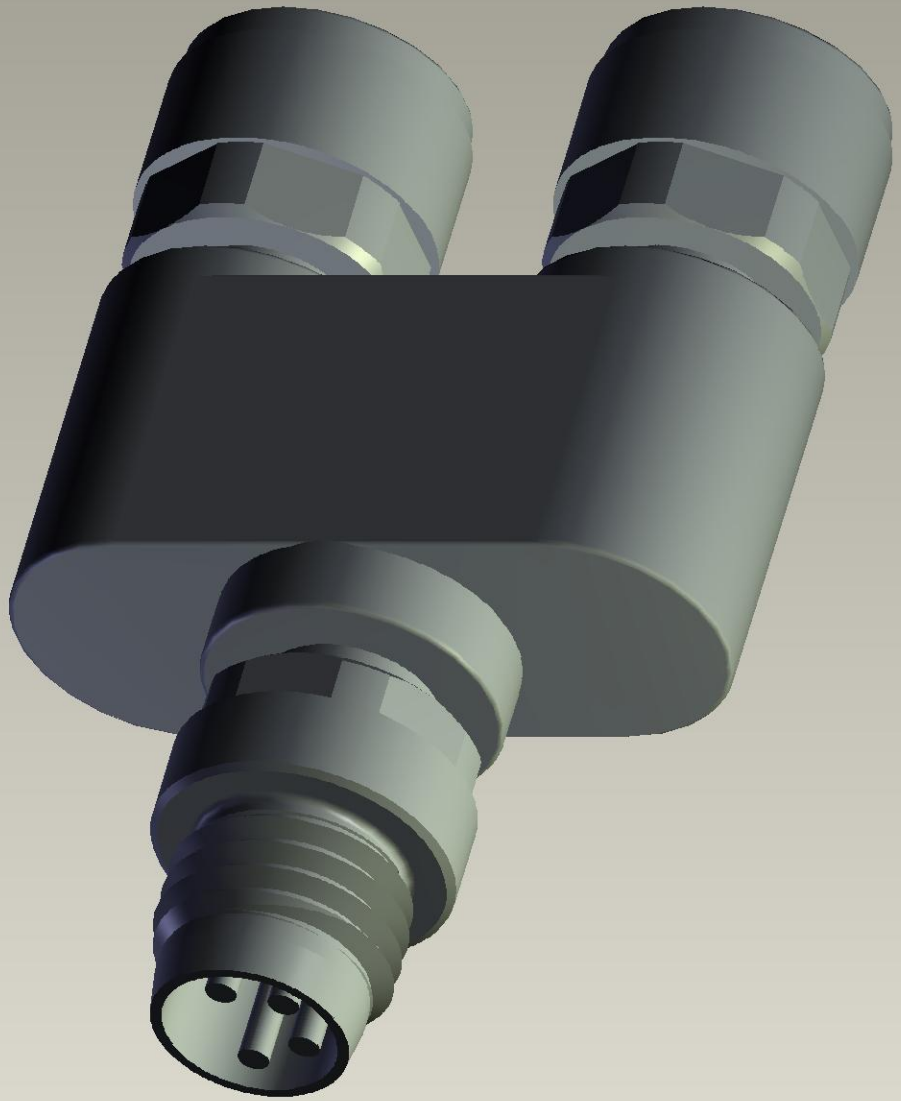

Instance:C-T4081122004-000