FBA09A (92□ x 25.5L)

NMB-MAT

EMINEBEA.COM

DC Axial Fans

General Specifications

Allowable Ambient Temperature Range:
-10°C ~ +70°C (65%RH) (Operating)
-40°C ~ +75°C (65%RH) (Storage)
(non-condensing environment)

Expected Life

Failure Rate: 10%
50,000 Hours (40°C, 65%RH)

Outline

Units: inch / (mm)

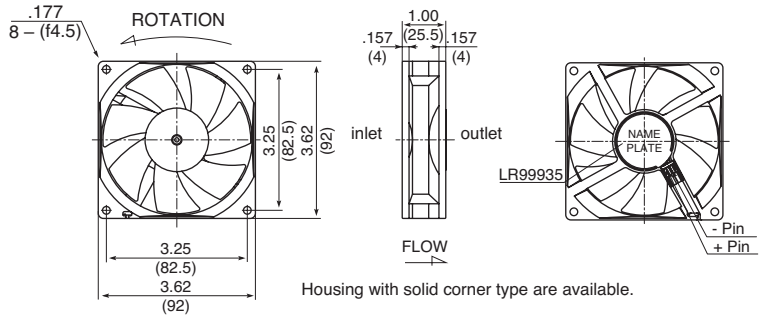

Housing with solid corner type are available.

Characteristic Curves

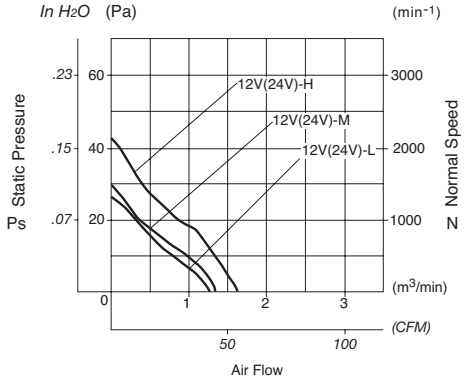

Panel Cut-outs

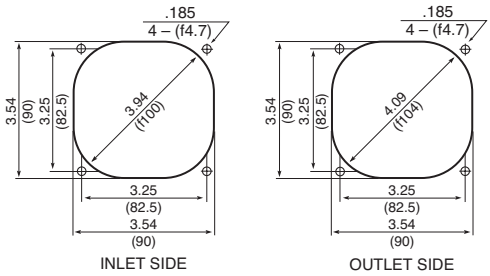

Material

Bearing: Hydro Wave Bearing

Specifications

MODEL	Rated Voltage	Operating Voltage	Current	Input Power	Rated Speed	Max. Air Flow		Max. Static Pressure		Noise	Mass
	(V)	(V)	(A)*1	(W)*1	(min-1)*1	CFM*1	(m3/min)*1	in H2O	(Pa)*1	(dB)*1	(g)
FBA09A 12L	12	7.0 ~ 13.8	110	1.32	2200	42.7	1.21	.10	25.5	27.0	110
FBA09A 12M	12	7.0 ~ 13.8	150	1.80	2450	48.0	1.36	.11	29.4	30.0	110
FBA09A 12H	12	7.0 ~ 13.8	255	2.70	2950	56.8	1.61	.16	42.1	35.0	110
FBA09A 24L	24	14.0 ~ 27.6	80	1.92	2200	42.7	1.21	.10	25.5	27.0	110
FBA09A 24M	24	14.0 ~ 27.6	110	2.64	2450	48.0	1.36	.11	29.4	30.0	110
FBA09A 24H	24	14.0 ~ 27.6	140	3.36	2900	56.8	1.61	.16	42.1	35.0	110

Rotation: Clockwise Airflow Outlet: Air Out Over Struts *1: Average Values in Free Air

DC Axial Fans FB Series Part Numbering System

To show details, place the mouse cursor on each item of the part number. Click "Display All" button to show all details.

FB	A	08	A	12	H	1	A	S
(1)	(2)	(3)	(4)	(5)	(6)	(7)	(8)	(9)

Display All

1. Motor type

FB	DC Axial fans

2. Bearing type or Motor Type

A	HWB
K	Ball bearing
L	ES Series

3. Housing Size

04	40 X 40mm	09	92 X 92mm
06	60 X 60mm	12	120 X 120mm
08	80 X 80mm		

4. Housing thickness

A	25.5mm	F	20mm
T	15mm	H	42mm
G	38mm		

5. Rated voltage

12	12V
24	24V

6. Speed

L	Low
M	Middle
H	High
V	Variable (Option)

7. Terminal

1	With leads
□	No leads

8. Lead wire

A	Standard 2 leads
B	Standard 3 leads
C ~	Optional leads

9. Option

S	Locked sensor
X	Tacho sensor
Z	Solid corner housing
O	S + Z

Copyright 2002-2006 Minebea Co., Ltd.