KEMET Part Number: ELH479M016AS6AA

ELH, Aluminum Electrolytic, 85C, 47,000 uF, 20%, 16 VDC, -40/+85C

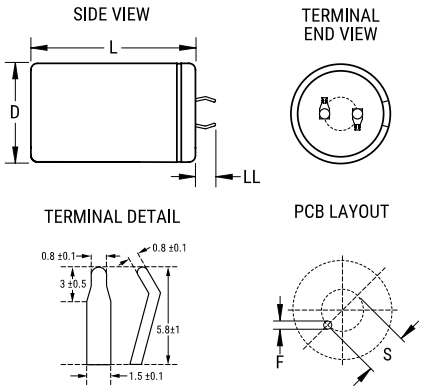

General Information	
Supplier:	KEMET
Series:	ELH
Dielectric:	Aluminum Electrolytic
Description:	Snap-In, Aluminum Electrolytic
RoHS:	Yes
Lead:	2 Pin

Dimensions	
D	30mm +/-1mm
L	50mm +/-2mm
S	10mm +/-0.5mm
LL	5.8mm +/-1mm
F	2mm +/-0.1mm

Specifications	
Capacitance:	47,000 uF
Capacitance Tolerance:	20%
Voltage DC:	16 VDC, 20 VDC (Surge)
Temperature Range:	-40/+85C
Rated Temperature:	85C
Life:	2000 Hrs
Dissipation Factor:	55.00%
Ripple Current:	6800 mAmps (120Hz)
Leakage Current:	3000 uA (5min 20C)

Packaging Specifications	
Packaging:	Bulk, Bag
Packaging Quantity:	200

Statements of suitability for certain applications are based on our knowledge of typical operating conditions for such applications, but are not intended to constitute - and we specifically disclaim - any warranty concerning suitability for a specific customer application or use. This Information is intended for use only by customers who have the requisite experience and capability to determine the correct products for their application. Any technical advice inferred from this Information or otherwise provided by us with reference to the use of our products is given gratis, and we assume no obligation or liability for the advice given or results obtained.

© 2006 - 2019 KEMET