KEMET Part Number: R413I21004000M

(413I21004000M)

R41, Film, Metallized Polypropylene, Automotive Safety, 0.01 uF, 20%, 300 VAC (Y2), 1000 VDC, 110C, Lead Spacing = 15mm

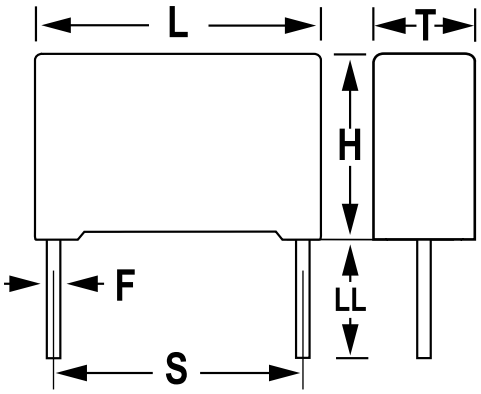

General Information	
Supplier:	KEMET
Series:	R41
Dielectric:	Metallized Polypropylene
Style:	Radial
Features:	Automotive Grade, EMI Safety
RoHS:	Yes
Lead:	Wire Leads
Qualifications:	AEC-Q200, ENEC, UL, cUL, CQC
AEC-Q200:	Yes

Dimensions	
L	18mm +0.3mm
H	11mm +0.1mm
T	5mm +0.2mm
S	15mm +/-0.4mm
LL	30mm +5mm
F	0.6mm +/-0.05mm

Specifications	
Capacitance:	0.01 uF
Capacitance Tolerance:	20%
Voltage AC:	300 VAC (Y2)
Voltage DC:	1000 VDC
Temperature Range:	-40/+110C
Rated Temperature:	110C
Dissipation Factor:	0.30% 1KHz
Insulation Resistance:	100 GOhms
Max dV/dt:	600 V/us
Safety Class:	Y2

Packaging Specifications	
Packaging:	Bulk, Bag
Packaging Quantity:	1000

Statements of suitability for certain applications are based on our knowledge of typical operating conditions for such applications, but are not intended to constitute - and we specifically disclaim - any warranty concerning suitability for a specific customer application or use. This Information is intended for use only by customers who have the requisite experience and capability to determine the correct products for their application. Any technical advice inferred from this Information or otherwise provided by us with reference to the use of our products is given gratis, and we assume no obligation or liability for the advice given or results obtained.

© 2006 - 2019 KEMET