KEMET Part Number: T495A226K006ATE500

T495, Tantalum, MnO2 Tantalum, 22 uF, 10%, 6.3 VDC, SMD, MnO2, Molded, Low ESR, 500 mOhms, 3216, Height Max = 1.8mm

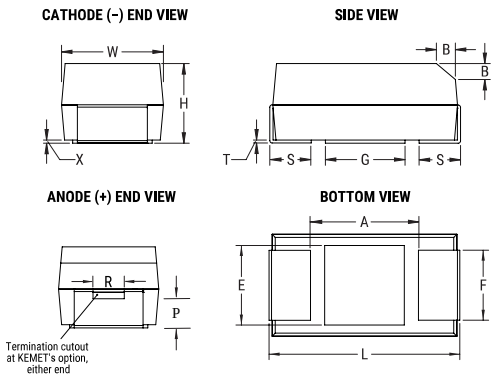

General Information	
Supplier:	KEMET
Series:	T495
Dielectric:	MnO2 Tantalum
Style:	SMD Chip
Description:	SMD, MnO2, Molded, Low ESR
Features:	Low ESR
RoHS:	Yes
Termination:	Tin
Shelf Life:	156 Weeks
MSL:	1

Dimensions	
Footprint	3216
L	3.2mm +/-0.2mm
W	1.6mm +/-0.2mm
H	1.6mm +/-0.2mm
T	0.13mm REF
S	0.8mm +0.2/-0.3mm
F	1.2mm +/-0.1mm
A	1.2mm MIN
B	0.4mm +/-0.15mm
E	1.3mm REF
G	1.1mm REF
P	0.4mm REF
R	0.4mm REF
X	0.1mm +/-0.1mm

Specifications	
Capacitance:	22 uF
Capacitance Tolerance:	10%
Voltage DC:	6.3 VDC (85C), 4.22 VDC (125C)
Temperature Range:	-55/+125C
Rated Temperature:	85C
Dissipation Factor:	6.00% 120Hz 20C
Failure Rate:	N/A
Resistance:	500 mOhms (100kHz)
Ripple Current:	387 mAmps (100kHz 25C), 348.3 mAmps (85C), 154.8 mAmps (125C)
Leakage Current:	1.4 uA (5min 20C)

Packaging Specifications	
Weight:	58.6 mg
Packaging:	T&R, 178mm
Packaging Quantity:	2000

Statements of suitability for certain applications are based on our knowledge of typical operating conditions for such applications, but are not intended to constitute - and we specifically disclaim - any warranty concerning suitability for a specific customer application or use. This Information is intended for use only by customers who have the requisite experience and capability to determine the correct products for their application. Any technical advice inferred from this Information or otherwise provided by us with reference to the use of our products is given gratis, and we assume no obligation or liability for the advice given or results obtained.

© 2006 - 2019 KEMET