KEMET Part Number: CBR02C330J8GAC

CBR-SMD RF C0G, Ceramic, High Q, 33 pF, 5%, 10 VDC, C0G, SMD, Fixed, RF, Ultra High Q, Low ESR, Class I, 0201

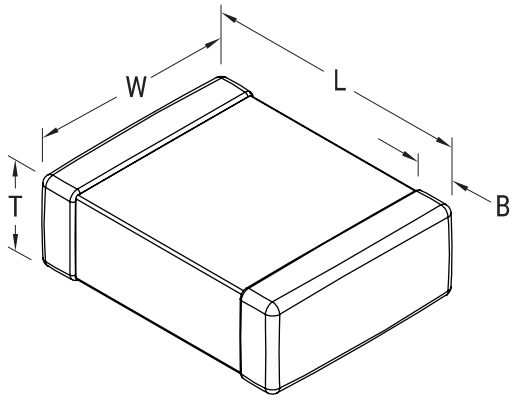

Dimensions	
L	0.6mm +/-0.03mm
W	0.3mm +/-0.03mm
T	0.3mm +/-0.03mm
B	0.15mm +/-0.05mm

Packaging Specifications	
Packaging:	T&R, 180mm, Plastic Tape
Packaging Quantity:	15000

General Information	
Supplier:	KEMET
Series:	CBR-SMD RF C0G
Style:	SMD Chip
Description:	SMD, Fixed, RF, Ultra High Q, Low ESR, Class I
Features:	Ultra High Q, Low ESR, Class I
RoHS:	Yes
Termination:	Tin
Marking:	No
Miscellaneous:	Minimum Q = 1400
Notes:	Solder Reflow Only
Chip Size:	0201

Specifications	
Capacitance:	33 pF
Capacitance Tolerance:	5%
Voltage DC:	10 VDC
Dielectric Withstanding Voltage:	25 V
Temperature Range:	-55/+125C
Temperature Coefficient:	C0G
Dissipation Factor:	0.10%
Aging Rate:	0% Loss/Decade Hour
Insulation Resistance:	10 GOhms
Quality Factor:	1400

Statements of suitability for certain applications are based on our knowledge of typical operating conditions for such applications, but are not intended to constitute - and we specifically disclaim - any warranty concerning suitability for a specific customer application or use. This Information is intended for use only by customers who have the requisite experience and capability to determine the correct products for their application. Any technical advice inferred from this Information or otherwise provided by us with reference to the use of our products is given gratis, and we assume no obligation or liability for the advice given or results obtained.

© 2006 - 2019 KEMET