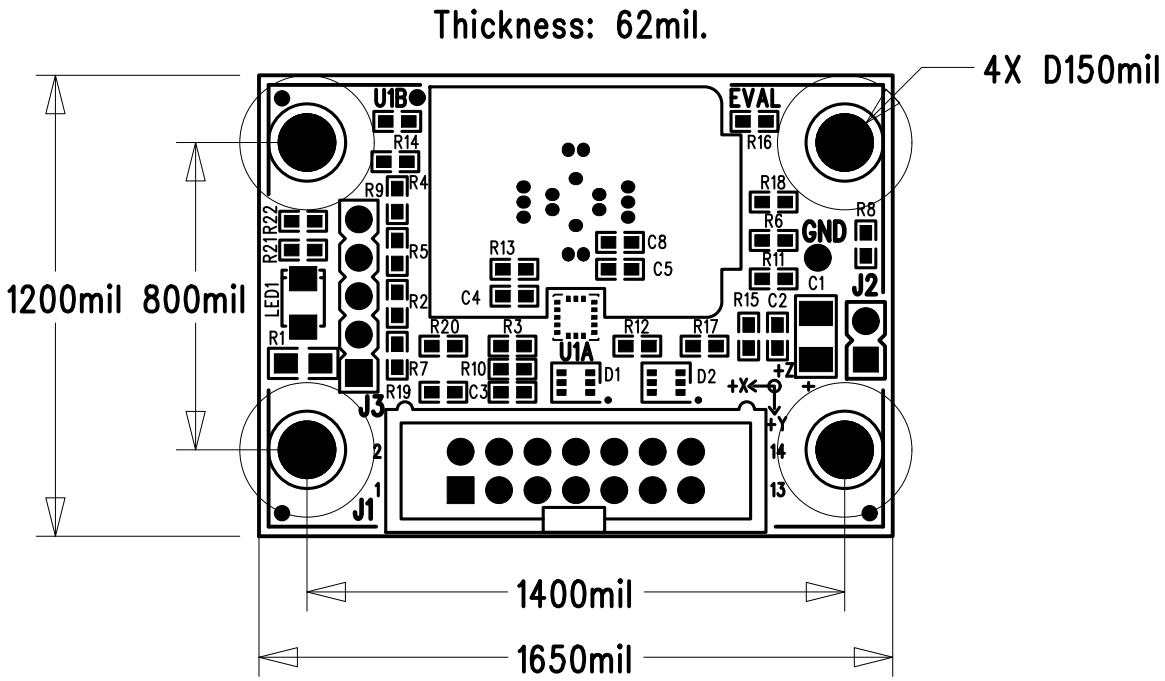
Thickness: 62mil.
4X D150mil
1200mil
800mil
1400mil
1650mil
U1B
EVAL
GND
J1
J2
J3
U1A
LED1
R1
R2
R3
R4
R5
R6
R7
R8
R9
R10
R11
R12
R13
R14
R15
R16
R17
R18
R19
R20
R21
R22
C1
C2
C3
C4
C5
C8
D1
D2
+X
+Y
+Z
1
2
13
14

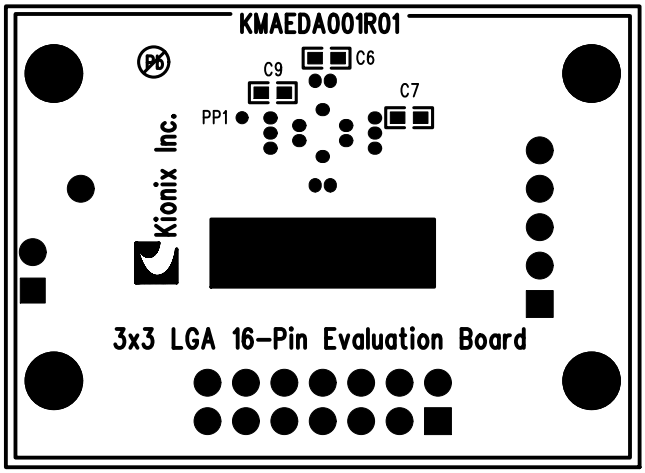
KMAEDA001R01
C9
C6
C7
PP1
Kionix Inc.
3x3 LGA 16-Pin Evaluation Board

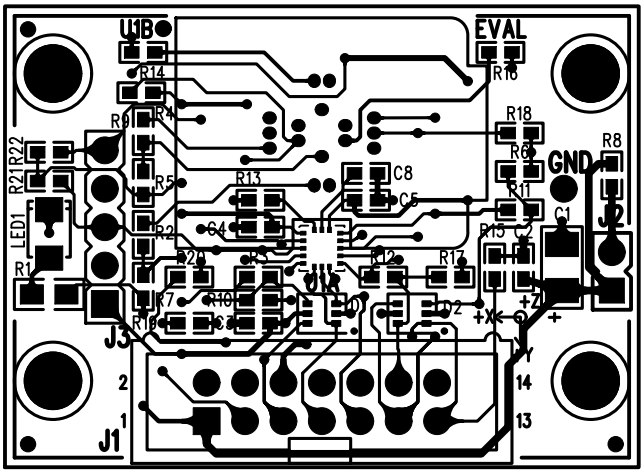
U1B
EVAL
R14
R16
R9
R4
R18
R8
R22
R21
R6
GND
R5
R13
C8
R11
C5
LED1
R2
C4
C1
J2
R15
C2
R1
R20
R3
R12
R17
U1A
R7
R10
D1
D2
+X
+Z
+
R19
C3
J3
Y
2
14
1
13
J1

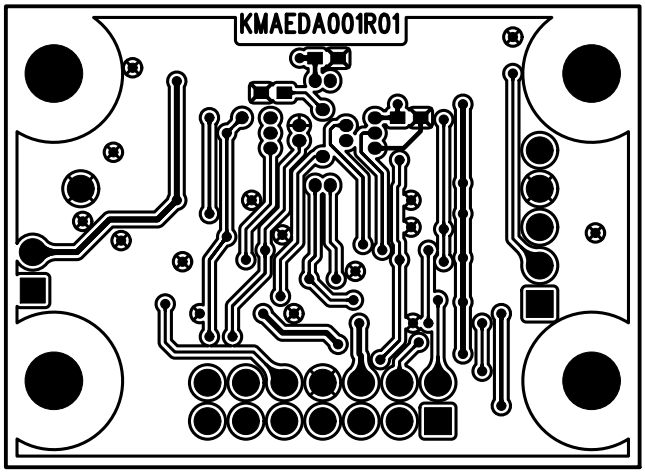
KMAEDA001R01