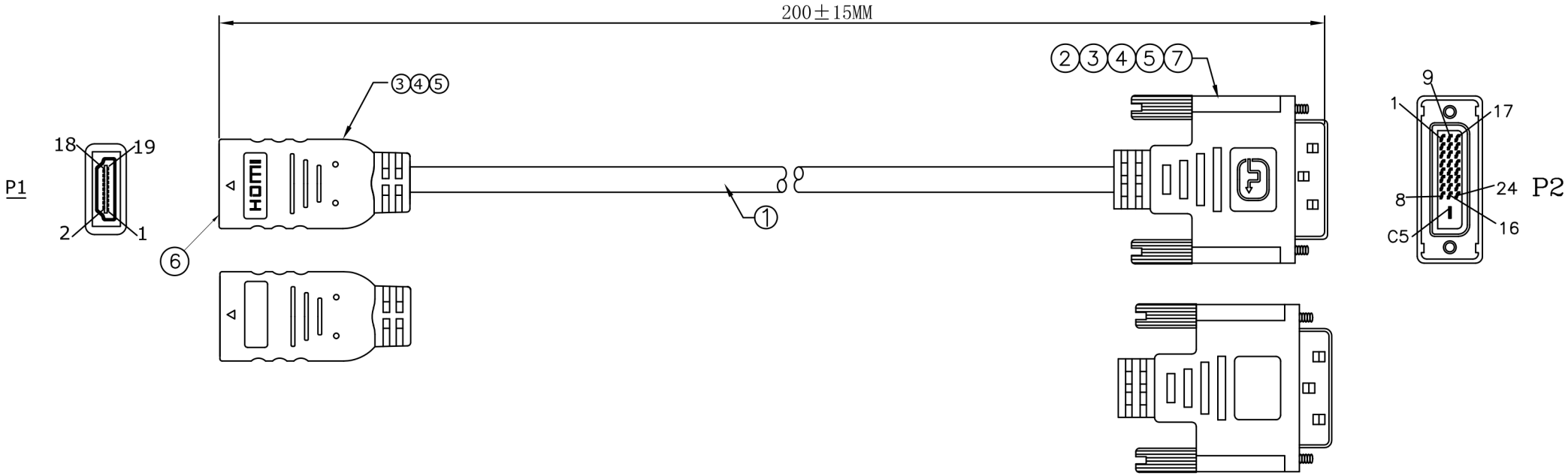

Electrical Test:

1. 100%Test(Open ,short ,miss wire)
2. Contact Resistance: 2 ohm(max).
3. Insulation Resistance: DC 300V/10ms,10M ohm(MIN)

PIN ASSIGNMENT

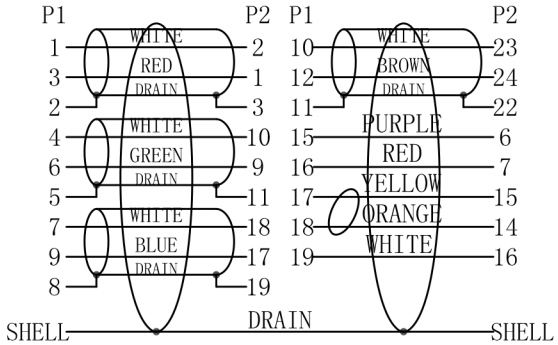

NO		DESCRIPTION	Q'TY	UNIT
7	A6-0000025	DVI M transparent dust cover	1	PCS
6	A6-0000146	HDMI F transparent dust cover	1	PCS
5	A7-R040001	#4-40UNC 2.8*45MM nickel plated nut	2	PCS
4	A5-R047001	45P Black PVC RoHS	28	G
3	A5-R047011	Transparent PE	8	G
2	A0010204-00043	DVI (24+1) M~Black insulation~Nickel plated iron shell~PIN G/F ~	1	PCS
1	A0010304-00133	UL20276~[30AWG(7/0.10TC)+E(7/0.10TC+HDPE)AM]*4P+30AWG(7/0.10TC)*1P+30AWG(7/0.10TC)*3C+AEB(16/4/0.12AL 50% AL)~OD:5.5MM~Black PVC~MARK: E342987 兄 AWM STYLE 20276 80℃ 30V VW-1 DVI CABLE	0.2	M

	TOLERANCE INCHES	M/M
.X	.015	.30
.XX	.010	.10
.XXX	.005	.05

DRAWN BY

CHECK BY

APPD BY

TITLE: HDMI F TO DVI(24+1) M CABLE

CUSTOMER :	CPC
CUSTOMER P/N :	CS32853
SCALE	NONE
UNIT	MM
DATE	2019.04.09

REV. A1

1/1