Product Change Notification - SYST-14ZNNE960

Date:

17 Jun 2019

Product Category:

8-bit Microcontrollers

Affected CPNs:

Notification subject:

Data Sheet - PIC16(L)F19155/56/75/76/85/86 Data Sheet

Notification text:

SYST-14ZNNE960

Microchip has released a new DeviceDoc for the PIC16(L)F19155/56/75/76/85/86 Data Sheet of devices. If you are using one of these devices please read the document located at PIC16(L)F19155/56/75/76/85/86 Data Sheet.

Notification Status: Final

Description of Change:

Removed Figures 35-11: Type-A Waveforms in 1/2 Mux, 1/3 Bias Drive; Figure 35-12: Type-B Waveforms in 1/2 Mux, 1/3 Bias Drive; Figure 35-13: Type-A Waveforms in 1/3 Mux, 1/2 Bias Drive; and Figure 35-16: Type-B Waveforms in 1/3 Mux, 1/2 Bias Drive.
Updated Equation 19-1; Figures 15-1, 19-2, 24-2, 24-3, 35-6, and 35-7; Registers 5-1, 11-1, 12-2, 14-1, 14-2, 14-5, 14-25 through 14-40, 19-36, 24-1, 26-3, 27-1, 28-5, 29-5, and 35-6; Sections 9.2.2.3, 14.8, 14.10.6, 14-.0.7, 19.1.2, 24.0, 24.1, 24.1.1, 24.1.2, 24.1.3, 35.0, 35.1, 35.2, 35.3, 35.3.1, 35.4, 35.5, 35.5.1, 35.5.2, 35.5.3, 35.6.1, 35.6.4, 35.7, 35.7.2, 35.7.3, 35.7.4, 35.7.5, 35.8, and 35.11; and Tables 1-2, 4-1, 4-4, 4-5, 4-10, 4-12, 13-1, 13-2, 14-5, 14-6, 17-1, 19-1, 30-3, 38-1, 39-2, 39-3, 39-7, 39-12, 39-14, 39-15, 39-16, and 39-18.
Removed Preliminary status.
Added Characterization Data.

Impacts to Data Sheet: None

Reason for Change: To Improve Manufacturability

Change Implementation Status: Complete

Date Document Changes Effective: 17 Jun 2019

NOTE: Please be advised that this is a change to the document only the product has not been changed.

Markings to Distinguish Revised from Unrevised Devices: N/A

Attachment(s):

PIC16(L)F19155/56/75/76/85/86 Data Sheet

Please contact your local Microchip sales office with questions or concerns regarding this notification.

Terms and Conditions:

If you wish to receive Microchip PCNs via email please register for our PCN email service at our PCN home page select register then fill in the required fields. You will find instructions about registering for Microchips PCN email service in the PCN FAQ section.

If you wish to change your PCN profile, including opt out, please go to the PCN home page select login and sign into your myMicrochip account. Select a profile option from the left navigation bar and make the applicable selections.

Affected Catalog Part Numbers (CPN)

PIC16F19155-E/MV
PIC16F19155-E/SO
PIC16F19155-E/SP
PIC16F19155-E/SS
PIC16F19155-I/MV
PIC16F19155-I/SO
PIC16F19155-I/SP
PIC16F19155-I/SS
PIC16F19155T-I/MV
PIC16F19155T-I/SO
PIC16F19155T-I/SS
PIC16F19156-E/MV
PIC16F19156-E/SO
PIC16F19156-E/SP
PIC16F19156-E/SS
PIC16F19156-I/MV
PIC16F19156-I/SO
PIC16F19156-I/SP
PIC16F19156-I/SS
PIC16F19156T-I/MV
PIC16F19156T-I/SO
PIC16F19156T-I/SS
PIC16F19175-E/MV
PIC16F19175-E/P
PIC16F19175-E/PT
PIC16F19175-I/MV
PIC16F19175-I/P
PIC16F19175-I/PT
PIC16F19175T-I/MV
PIC16F19175T-I/PT
PIC16F19176-E/MV
PIC16F19176-E/P
PIC16F19176-E/PT
PIC16F19176-I/MV
PIC16F19176-I/P
PIC16F19176-I/PT
PIC16F19176T-I/MV
PIC16F19176T-I/PT
PIC16F19185-E/MV
PIC16F19185-E/PT
PIC16F19185-I/MV
PIC16F19185-I/PT
PIC16F19185T-I/MV
PIC16F19185T-I/PT
PIC16F19186-E/MV
PIC16F19186-E/PT

PIC16F19186-I/MV
PIC16F19186-I/PT
PIC16F19186T-I/MV
PIC16F19186T-I/PT
PIC16LF19155-E/MV
PIC16LF19155-E/SO
PIC16LF19155-E/SP
PIC16LF19155-E/SS
PIC16LF19155-I/MV
PIC16LF19155-I/SO
PIC16LF19155-I/SP
PIC16LF19155-I/SS
PIC16LF19155T-I/MV
PIC16LF19155T-I/SO
PIC16LF19155T-I/SS
PIC16LF19156-E/MV
PIC16LF19156-E/SO
PIC16LF19156-E/SP
PIC16LF19156-E/SS
PIC16LF19156-I/MV
PIC16LF19156-I/SO
PIC16LF19156-I/SP
PIC16LF19156-I/SS
PIC16LF19156T-I/MV
PIC16LF19156T-I/SO
PIC16LF19156T-I/SS
PIC16LF19175-E/MV
PIC16LF19175-E/P
PIC16LF19175-E/PT
PIC16LF19175-I/MV
PIC16LF19175-I/P
PIC16LF19175-I/PT
PIC16LF19175T-I/MV
PIC16LF19175T-I/PT
PIC16LF19176-E/MV
PIC16LF19176-E/P
PIC16LF19176-E/PT
PIC16LF19176-I/MV
PIC16LF19176-I/P
PIC16LF19176-I/PT
PIC16LF19176T-I/MV
PIC16LF19176T-I/PT
PIC16LF19185-E/MV
PIC16LF19185-E/PT
PIC16LF19185-I/MV
PIC16LF19185-I/PT
PIC16LF19185T-I/MV
PIC16LF19185T-I/PT
PIC16LF19186-E/MV

PIC16LF19186-E/PT
PIC16LF19186-I/MV
PIC16LF19186-I/PT
PIC16LF19186-I/PTC01
PIC16LF19186T-I/MV
PIC16LF19186T-I/PT
PIC16LF19186T-I/PTC01

PIC16(L)F19155/56/75/76/85/86

Full-Featured 28/40/44/48-Pin Microcontrollers

Description

PIC16(L)F19155/56/75/76/85/86 microcontrollers offer eXtreme Low-Power (XLP) LCD drive coupled with Core Independent Peripherals (CIPs) and Intelligent Analog. They are especially suited for battery-powered LCD applications due to an integrated charge pump, high current I/O drive for backlighting, and battery backup of the Real-Time Clock/Calendar (RTCC). Active clock tuning of the HFINTOSC provides a highly accurate clock source over voltage and temperature. The family also features a new 12-bit ADC controller which can automate Capacitive Voltage Divider (CVD) techniques for advanced touch sensing, averaging, filtering, oversampling and automatic threshold comparison. Other new features include low-power Idle and Doze modes, Device Information Area (DIA), and Memory Access Partition (MAP). These low-power products are available in 28/40/44 and 48 pins to support the customer in various LCD and general purpose applications.

Core Features

- C Compiler Optimized RISC Architecture
- Operating Speed:
  - DC – 32 MHz clock input
  - 125 ns minimum instruction cycle
- Interrupt Capability
- 16-Level Deep Hardware Stack
- Timers:
  - Two 8-bit (TMR2/4) Timer with Hardware Limit Timer Extension (HLT)
  - 16-bit (TMR0/1)
- Low-Current Power-on Reset (POR)
- Configurable Power-up Timer (PWRTE)
- Brown-out Reset (BOR) with Fast Recovery
- Low-Power BOR (LPBOR) Option
- Windowed Watchdog Timer (WWDT):
  - Variable prescaler selection
  - Variable window size selection
  - All sources configurable in hardware or software
- Programmable Code Protection

Memory

- Up to 16kW/28KB Flash Program Memory
- Up to 2KB Data SRAM Memory
- 256 bytes DataEE
- Direct, Indirect and Relative Addressing modes
- Memory Access Partition (MAP):
  - Bootloader write-protect
  - Custom partition
- Device Information Area (DIA):
  - Temp sensor factory calibrated data
  - Fixed Voltage Reference
  - Device ID

Operating Characteristics

- Operating Voltage Range:
  - 1.8V to 3.6V (PIC16LF19155/56/75/76/85/86)
  - 2.3V to 5.5V (PIC16F19155/56/75/76/85/86)
- Temperature Range:
  - Industrial: -40°C to 85°C
  - Extended: -40°C to 125°C

Power-Saving Functionality

- Doze mode: Ability to run CPU core slower than the system clock
- Idle mode: Ability to halt CPU core while internal peripherals continue operating
- Sleep mode: Lowest power consumption
- Peripheral Module Disable (PMD): Ability to disable hardware module to minimize power consumption of unused peripherals

eXtreme Low-Power (XLP) Features

- Sleep mode: 50 nA @ 1.8V, typical
- Watchdog Timer: 500 nA @ 1.8V, typical
- Secondary Oscillator: 500 nA @ 32 kHz
- Operating Current:
  - 8 µA @ 32 kHz, 1.8V, typical
  - 32 µA/MHz @ 1.8V, typical

Digital Peripherals

- LCD Controller:
  - Up to 248 segments
  - Charge pump for low-voltage operation
  - Contrast control
- Four Configurable Logic Cell Modules (CLC):
  - Integrated combinational and sequential logic

© 2017-2019 Microchip Technology Inc.

- Complementary Waveform Generator (CWG):
  - Rising and falling edge dead-band control
  - Full-bridge, half-bridge, 1-channel drive
    - Multiple signal sources
- Two Capture/Compare/PWM (CCP) module
- Two 10-Bit PWMs
- Peripheral Pin Select (PPS):
  - Enables pin mapping of digital I/O
- Communication:
  - Two EUSART, RS-232, RS-485, LIN compatible
  - One SPI/I^2C, SMBus, PMBus™ compatible
- Up to 43 I/O Pins:
  - Individually programmable pull-ups
  - Slew rate control
  - Interrupt-on-change with edge-select
  - Input level selection control (ST or TTL)
  - Digital open-drain enable

Analog Peripherals

- Analog-to-Digital Converter with Computation (ADC^2):
  - 12-bit with up to 39 external channels
  - Automates math functions on input signals: averaging, filter calculations, oversampling and threshold comparison
  - Conversion available during Sleep
- Two Comparators:
  - (1) Low-Power Clocked Comparator
  - (1) High-Speed Comparator
  - Fixed Voltage Reference at (non)inverting input(s)
  - Comparator outputs externally accessible
- 5-Bit Digital-to-Analog Converter (DAC):
  - 5-bit resolution, rail-to-rail
  - Positive Reference Selection
  - Unbuffered I/O pin output
  - Internal connections to ADCs and comparators
- Voltage Reference:
  - Fixed Voltage Reference with 1.024V, 2.048V and 4.096V output levels
- Zero-Cross Detect Module:
  - AC high-voltage zero-crossing detection for simplifying TRIAC control
  - Synchronized switching control and timing

Flexible Oscillator Structure

- High-Precision Internal Oscillator:
  - Active Clock Tuning of HFINTOSC over voltage and temperature (ACT)
  - Selectable frequency range up to 32 MHz ±1% typical
- x2/x4 PLL with Internal and External Sources
- Low-Power Internal 31 kHz Oscillator (LFINTOSC)
- External 32 kHz Crystal Oscillator (SOSC)
  - Oscillator Start-up Timer (OST)
  - Ensures stability of crystal oscillator source
- External Oscillator Block with:
  - Three external clock modes up to 32 MHz
- Fail-Safe Clock Monitor:
  - Allows for safe shutdown if peripherals clock stops

© 2017-2019 Microchip Technology Inc.

TABLE 1: PIC16(L)F191XX FAMILY TYPES

Device	Data Sheet Index	Program Flash Memory (kW/KB)	DataEE (bytes)	Data SRAM (bytes)	I/O Pins	12-bit ADC (ch)	5-bit DAC	Comparator	8-bit/ (with HLT) Timer	16-bit Timer	Window Watchdog Timer (WWDT)	CCP/10-bit PWM	CWG	CLC	Zero-Cross Detect	Temperature Indicator	Memory Access Partition	Device Information Area	EUSART/ I^2C/SPI	Peripheral Pin Select	Peripheral Module Disable	Debug(1)	LCD Segments (Max)	LCD Charge Pump/ Bias Generator
PIC16(L)F19155	(A)	8/14	256	1024	24	20	1	2	2	2	Y	2/2	1	4	Y	Y	Y	Y	2/1	Y	Y	I	96	Y/Y
PIC16(L)F19156	(A)	16/28	256	2048	24	20	1	2	2	2	Y	2/2	1	4	Y	Y	Y	Y	2/1	Y	Y	I	96	Y/Y
PIC16(L)F19175	(A)	8/14	256	1024	35	31	1	2	2	2	Y	2/2	1	4	Y	Y	Y	Y	2/1	Y	Y	I	184	Y/Y
PIC16(L)F19176	(A)	16/28	256	2048	35	31	1	2	2	2	Y	2/2	1	4	Y	Y	Y	Y	2/1	Y	Y	I	184	Y/Y
PIC16(L)F19185	(A)	8/14	256	1024	43	39	1	2	2	2	Y	2/2	1	4	Y	Y	Y	Y	2/1	Y	Y	I	248	Y/Y
PIC16(L)F19186	(A)	16/28	256	2048	43	39	1	2	2	2	Y	2/2	1	4	Y	Y	Y	Y	2/1	Y	Y	I	248	Y/Y
PIC16(L)F19195	(B)	8/14	256	1024	59	45	1	2	2	2	Y	2/2	1	4	Y	Y	Y	Y	2/1	Y	Y	I	360	Y/Y
PIC16(L)F19196	(B)	16/28	256	2048	59	45	1	2	2	2	Y	2/2	1	4	Y	Y	Y	Y	2/1	Y	Y	I	360	Y/Y
PIC16(L)F19197	(B)	32/56	256	4096	59	45	1	2	2	2	Y	2/2	1	4	Y	Y	Y	Y	2/1	Y	Y	I	360	Y/Y

Note 1: I – Debugging integrated on chip.

Data Sheet Index (Unshaded devices are described in this document):

A. Future Release PIC16(L)F19155/56/75/76/85/86 Data Sheet, 28/40/44/48-Pin

B. DS40001873 PIC16(L)F19195/6/7 Data Sheet, Full-Featured 64-Pin Microcontrollers

Note: For other small form-factor package availability and marking information, please visit www.microchip.com/packaging or contact your local sales office.

© 2017-2019 Microchip Technology Inc.

TABLE 2: PACKAGES

Device	28-Pin SPDIP	28-Pin SOIC	28-Pin SSOP	28-Pin UQFN (4x4)	40-Pin PDIP	40-Pin UQFN (5x5)	44-Pin TQFP	48-Pin UQFN (6x6)	48-Pin TQFP (7x7)
PIC16(L)F19155	X	X	X	X					
PIC16(L)F19156	X	X	X	X					
PIC16(L)F19175					X	X	X		
PIC16(L)F19176					X	X	X		
PIC16(L)F19185								X	X
PIC16(L)F19186								X	X

Note: Pin details are subject to change.

FIGURE 1: 28-PIN SSOP, SPDIP AND SOIC PIN DIAGRAM FOR PIC16(L)F19155/56

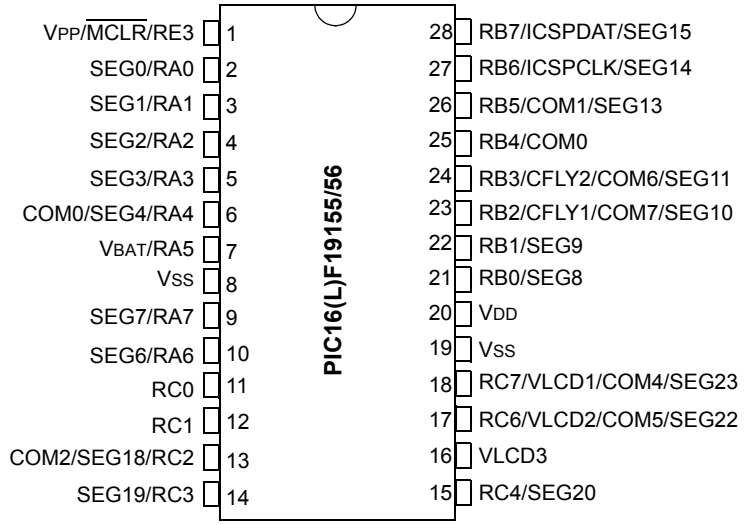

Note 1: See Table 3 for location of all peripheral functions.

FIGURE 2: 28-PIN UQFN PIN DIAGRAM FOR PIC16(L)F19155/56

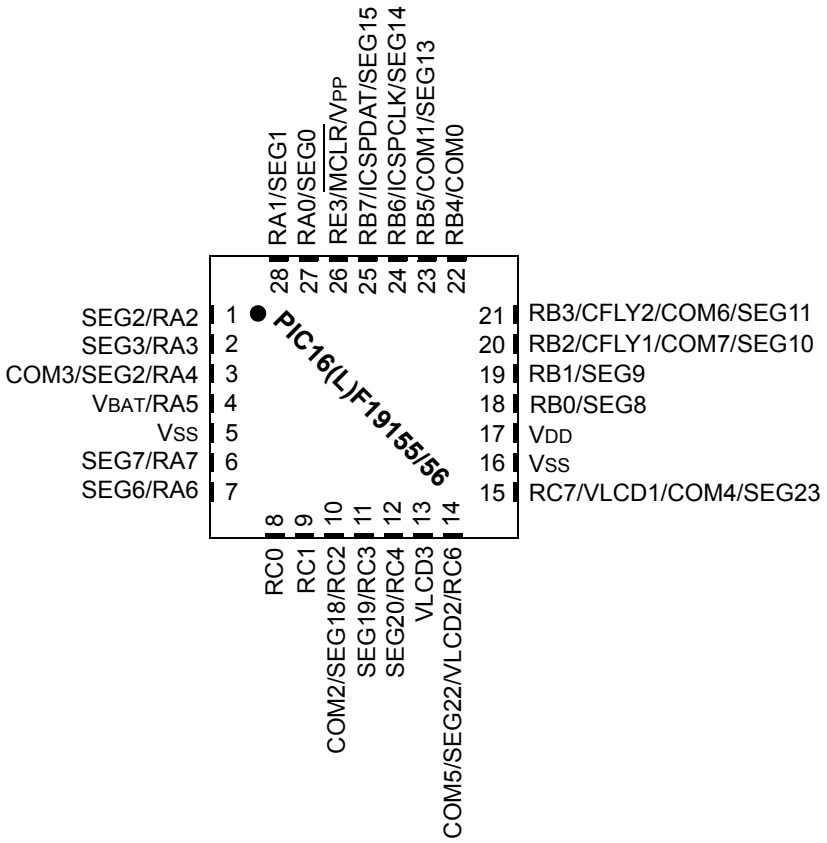

Note 1: See Table 3 for location of all peripheral functions.

2: All VDD and all VSS pins must be connected at the circuit board level. Allowing one or more VSS or VDD pins to float may result in degraded electrical performance or non-functionality.

3: The bottom pad of the QFN/UQFN package should be connected to VSS at the circuit board level.

FIGURE 3: 40-PIN PDIP PIN DIAGRAM FOR PIC16(L)F19175/76

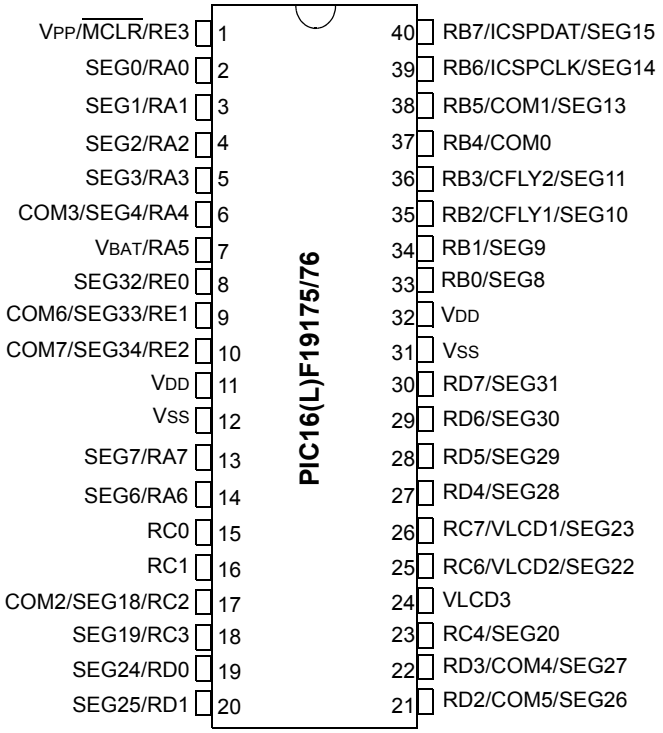

Note: See Table 4 for the pin allocation tables.

FIGURE 4: 40-PIN UQFN (5X5X0,5) PIN DIAGRAM FOR PIC16(L)F19175/76

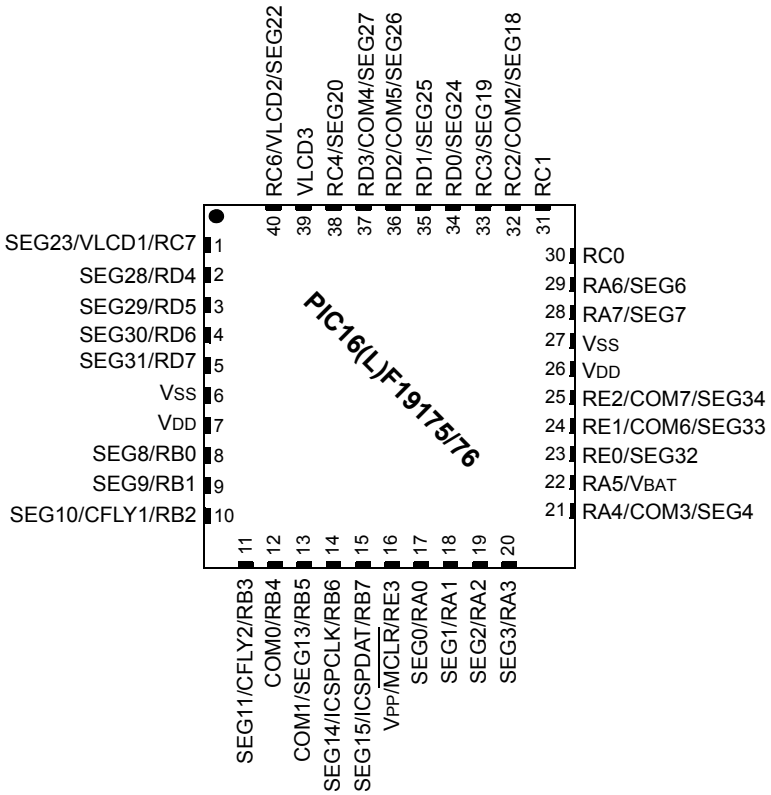

Note: See Table 4 for the pin allocation tables.

FIGURE 5: 44-PIN TQFP PIN DIAGRAM FOR PIC16(L)F19175/76

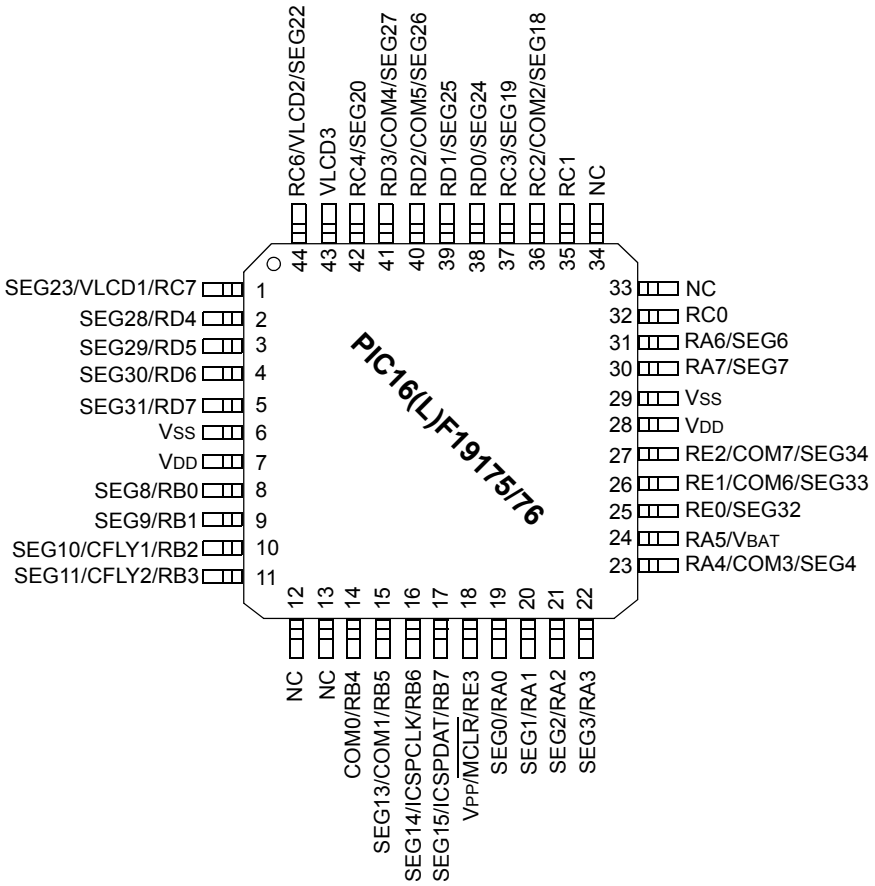

Note: See Table 4 for the pin allocation table.

FIGURE 6: 48-PIN TQFP/UQFN PIN DIAGRAM FOR PIC16(L)F19185/86

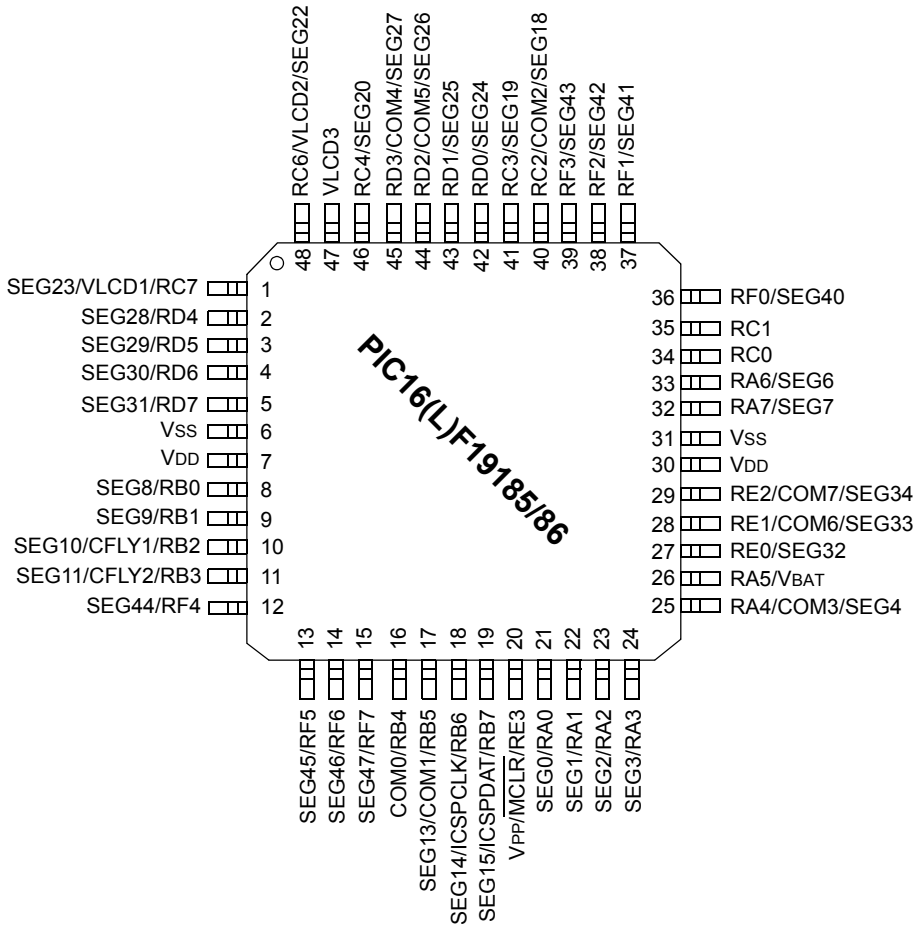

Note 1: See Table 5 for location of all peripheral functions.

2: QFN package orientation is the same. No leads are present on the QFN package.

PIN ALLOCATION TABLES

TABLE 3: 28-PIN ALLOCATION TABLE (PIC16(L)F19155/56)

I/O(2)	28-Pin SPDIP/SSOP/SOIC	28-Pin UQFN	ADC	Reference	Comparator	Zero-Cross Detect	DAC	Timers/SMT	CCP	PWM	CWG	MSSP	EUSART	CLC	RTCC	LCD	Interrupt-on-Change	High Current	Pull-up	Basic
RA0	2	27	ANA0	—	C1IN0- C2IN0-	—	—	—	—	—	—	—	—	CLCIN0(1)	—	SEG0	IOCA0	—	Y	—
RA1	3	28	ANA1	—	C1IN1- C2IN1-	—	—	—	—	—	—	—	—	CLCIN1(1)	—	SEG1	IOCA1	—	—	—
RA2	4	1	ANA2	—	C1IN0+ C2IN0+	—	DAC1OUT1	—	—	—	—	—	—	—	—	SEG2	IOCA2	—	Y	—
RA3	5	2	ANA3	VREF+	C1IN1+	—	DAC1REF+	—	—	—	—	—	—	—	—	SEG3	IOCA3	—	Y	—
RA4	6	3	ANA4	—	—	—	—	T0CKI(1)	—	—	—	—	—	—	—	SEG4 COM3	IOCA4	—	Y	—
RA5	7	4	—	—	—	—	—	—	—	—	—	$\overline{SS}$(1)	—	—	—	—	IOCA5	—	Y	VBAT
RA6	10	7	ANA6	—	—	—	—	—	—	—	—	—	—	—	—	SEG6	IOCA6	—	Y	CLKOUT OSC2
RA7	9	6	ANA7	—	—	—	—	—	—	—	—	—	—	—	—	SEG7	IOCA7	—	Y	OSC1 CLKIN
RB0	21	18	ANB0	—	C2IN1+	ZCD	—	—	—	—	CWG1IN(1)	—	—	—	—	SEG8	IOCB0	—	Y	INTPPS
RB1	22	19	ANB1	—	C1IN3- C2IN3-	—	—	—	—	—	—	SCL, SDA(1, 3, 4, 5, 6)	—	—	—	SEG9	IOCB1	HIB1	Y	—
RB2	23	20	ANB2	—	—	—	—	—	—	—	—	SCL, SDA(1, 3, 4, 5, 6)	—	—	—	SEG10 COM7 CFLY1	IOCB2	—	Y	—
RB3	24	21	ANB3	—	C1IN2- C2IN2-	—	—	—	—	—	—	—	—	—	—	SEG11 COM6 CFLY2	IOCB3	—	Y	—
RB4	25	22	ANB4 ADCACT(1)	—	—	—	—	—	—	—	—	—	—	—	—	COM0	IOCB4	—	Y	—
RB5	26	23	ANB5	—	—	—	—	T1G(1)	—	—	—	—	—	—	—	SEG13 COM1	IOCB5	—	Y	—

Note 1: This is a PPS remappable input signal. The input function may be moved from the default location shown to one of several other PORTx pins.
2: All digital output signals shown in this row are PPS remappable. These signals may be mapped to output onto one or more PORTx pin options.
3: This is a bidirectional signal. For normal module operation, the firmware should map this signal to the same pin in both the PPS input and PPS output registers.
4: These pins are configured for I^2C logic levels. PPS assignments to the other pins will operate, but input logic levels will be standard TTL/ST as selected by INLCVL register, instead of the I^2C specific or SMBUS input buffer thresholds.
5: These are alternative I^2C logic levels pins.
6: In I^2C logic levels configuration, these pins can operate as either SCL and SDA pins.

© 2017-2019 Microchip Technology Inc.

TABLE 3: 28-PIN ALLOCATION TABLE (PIC16(L)F19155/56) (CONTINUED)

I/O(2)	28-Pin SPDIP/SSOP/SOIC	28-Pin UQFN	ADC	Reference	Comparator	Zero-Cross Detect	DAC	Timers/SMT	CCP	PWM	CWG	MSSP	EUSART	CLC	RTCC	LCD	Interrupt-on-Change	High Current	Pull-up	Basic
RB6	27	24	ANB6	—	—	—	—	—	—	—	—	—	TX2(1) CK2(1)	CLCIN2(1)	—	SEG14	IOCB6	—	Y	ICDCLK/ ICSPCLK
RB7	28	25	ANB7	—	—	—	DAC1OUT2	—	—	—	—	—	RX2(1) DT2(1)	CLCIN3(1)	—	SEG15	IOCB7	—	Y	ICDDAT/ ICSPDAT
RC0	11	8	—	—	—	—	—	T1CKI(1) SMTWIN1(1)	—	—	—	—	—	—	—	—	IOCC0	—	Y	SOSCO
RC1	12	9	—	—	—	—	—	SMTSIG1(1) T4IN(1)	CCP2(1)	—	—	—	—	—	—	—	IOCC1	—	Y	SOSCI
RC2	13	10	ANC2	—	—	—	—	—	CCP1(1)	—	—	—	—	—	—	COM2 SEG18	IOCC2	—	Y	—
RC3	14	11	ANC3	—	—	—	—	T2IN(1)	—	—	—	SCK(1) SCL(1,3,4)	—	—	—	SEG19	IOCC3	—	Y	—
RC4	15	12	ANC4	—	—	—	—	—	—	—	—	SDI(1) SDA(1,3,4)	—	—	—	SEG20	IOCC4	—	Y	—
RC6	17	14	ANC6	—	—	—	—	—	—	—	—	—	TX1(1) CK1(1)	—	—	COM5 SEG22 VLCD2	IOCC6	—	Y	—
RC7	18	15	ANC7	—	—	—	—	—	—	—	—	—	RX1(1) DT1(1)	—	—	SEG23 COM4 VLCD1	IOCC7	—	Y	—
RE3	1	26	—	—	—	—	—	—	—	—	—	—	—	—	—	—	IOCE3	—	Y	$\overline{MCLR}$
VLCD3	16	13	—	—	—	—	—	—	—	—	—	—	—	—	—	VLCD3	—	—	—	—
VDD	20	17	—	—	—	—	—	—	—	—	—	—	—	—	—	—	—	—	—	VDD
VSS	8 19	5 16	—	—	—	—	—	—	—	—	—	—	—	—	—	—	—	—	—	VSS
OUT(2)	—	—	ADGRDA ADGRDB	—	C1OUT C2OUT	—	—	TMR0	CCP1 CCP2	PWM3 PWM4	CWG1A CWG1B CWG1C CWG1D	SDO SCK SCL SDA	TX1 DT1 CK1 TX2 DT2 CK2	CLC1OUT	RTCC	—	—	—	—	—

Note 1: This is a PPS remappable input signal. The input function may be moved from the default location shown to one of several other PORTx pins.
2: All digital output signals shown in this row are PPS remappable. These signals may be mapped to output onto one or more PORTx pin options.
3: This is a bidirectional signal. For normal module operation, the firmware should map this signal to the same pin in both the PPS input and PPS output registers.
4: These pins are configured for I^2C logic levels. PPS assignments to the other pins will operate, but input logic levels will be standard TTL/ST as selected by INLCVL register, instead of the I^2C specific or SMBUS input buffer thresholds.
5: These are alternative I^2C logic levels pins.
6: In I^2C logic levels configuration, these pins can operate as either SCL and SDA pins.

© 2017-2019 Microchip Technology Inc.

TABLE 4: 40/44-PIN ALLOCATION TABLE (PIC16(L)F19175/76)

I/O(2)	40-Pin PDIP	40-Pin UQFN	44-Pin TQFP	44-Pin QFN	ADC	Reference	Comparator	Zero-Cross Detect	DAC	Timers/SMT	CCP	PWM	CWG	MSSP	EUSART	CLC	RTCC	LCD	Interrupt-on-Change	High Current	Pull-up	Basic
RA0	2	17	19	19	ANA0	—	C1IN0- C2IN0-	—	—	—	—	—	—	—	—	CLCIN0(1)	—	SEG0	IOCA0	—	Y	—
RA1	3	18	20	20	ANA1	—	C1IN1- C2IN1-	—	—	—	—	—	—	—	—	CLCIN1(1)	—	SEG1	IOCA1	—	Y	—
RA2	4	19	21	21	ANA2	—	C1IN0+ C2IN0+	—	DAC1OUT1	—	—	—	—	—	—	—	—	SEG2	IOCA2	—	Y	—
RA3	5	20	22	22	ANA3	VREF+	C1IN1+	—	DAC1REF+	—	—	—	—	—	—	—	—	SEG3	IOCA3	—	Y	—
RA4	6	21	23	23	ANA4	—	—	—	—	T0CKI(1)	—	—	—	—	—	—	—	SEG4 COM3	IOCA4	—	Y	—
RA5	7	22	24	24	—	—	—	—	—	—	—	—	—	$\overline{SS}$(1)	—	—	—	—	IOCA5	—	—	VBAT
RA6	14	29	31	33	ANA6	—	—	—	—	—	—	—	—	—	—	—	—	SEG6	IOCA6	—	Y	CLKOUT OSC2
RA7	13	28	30	32	ANA7	—	—	—	—	—	—	—	—	—	—	—	—	SEG7	IOCA7	—	Y	OSC1 CLKIN
RB0	33	8	8	9	ANB0	—	C2IN1+	ZCD	—	—	—	—	CWG1IN(1)	—	—	—	—	SEG8	IOCB0	—	Y	INTPPS
RB1	34	9	9	10	ANB1	—	C1IN3- C2IN3-	—	—	—	—	—	—	SCL, SDA(1, 3, 4, 5, 6)	—	—	—	SEG9	IOCB1	HIB1	Y	—
RB2	35	10	10	11	ANB2	—	—	—	—	—	—	—	—	SCL, SDA(1, 3, 4, 5, 6)	—	—	—	SEG10 CFLY1	IOCB2	—	Y	—
RB3	36	11	11	12	ANB3	—	C1IN2- C2IN2-	—	—	—	—	—	—	—	—	—	—	SEG11 CFLY2	IOCB3	—	Y	—
RB4	37	12	14	14	ANB4 ADCACT(1)	—	—	—	—	—	—	—	—	—	—	—	—	COM0	IOCB4	—	Y	—
RB5	38	13	15	15	ANB5	—	—	—	—	T1G(1)	—	—	—	—	—	—	—	SEG13 COM1	IOCB5	—	Y	—
RB6	39	14	16	16	ANB6	—	—	—	—	—	—	—	—	—	TX2(1) CK2(1)	CLCIN2(1)	—	SEG14	IOCB6	—	Y	ICDCLK/ ICSPCLK
RB7	40	15	17	17	ANB7	—	—	—	DAC1OUT2	—	—	—	—	—	RX2(1) DT2(1)	CLCIN3(1)	—	SEG15	IOCB7	—	Y	ICDDAT/ ICSPDAT

Note 1: This is a PPS remappable input signal. The input function may be moved from the default location shown to one of several other PORTx pins.
2: All digital output signals shown in this row are PPS remappable. These signals may be mapped to output onto one or more PORTx pin options.
3: This is a bidirectional signal. For normal module operation, the firmware should map this signal to the same pin in both the PPS input and PPS output registers.
4: These pins are configured for I^2C logic levels. PPS assignments to the other pins will operate, but input logic levels will be standard TTL/ST as selected by INLCVL register, instead of the I^2C specific or SMBUS input buffer thresholds.
5: These are alternative I^2C logic levels pins.
6: In I^2C logic levels configuration, these pins can operate as either SCL and SDA pins.

© 2017-2019 Microchip Technology Inc.

TABLE 4: 40/44-PIN ALLOCATION TABLE (PIC16(L)F19175/76) (CONTINUED)

I/O(2)	40-Pin PDIP	40-Pin UQFN	44-Pin TQFP	44-Pin QFN	ADC	Reference	Comparator	Zero-Cross Detect	DAC	Timers/SMT	CCP	PWM	CWG	MSSP	EUSART	CLC	RTCC	LCD	Interrupt-on-Change	High Current	Pull-up	Basic
RC0	15	30	32	34	—	—	—	—	—	T1CKI(1) SMTWIN1(1)	—	—	—	—	—	—	—	—	IOCC0	—	Y	SOSCO
RC1	16	31	35	35	—	—	—	—	—	SMTSIG1(1) T4IN(1)	CCP2(1)	—	—	—	—	—	—	—	IOCC1	—	Y	SOSCI
RC2	17	32	36	36	ANC2	—	—	—	—	—	CCP1(1)	—	—	—	—	—	—	COM2 SEG18	IOCC2	—	Y	—
RC3	18	33	37	37	ANC3	—	—	—	—	T2IN(1)	—	—	—	SCK(1) SCL(1,3,4)	—	—	—	SEG19	IOCC3	—	Y	—
RC4	23	38	42	42	ANC4	—	—	—	—	—	—	—	—	SDI(1) SDA(1,3,4)	—	—	—	SEG20	IOCC4	—	Y	—
RC6	25	40	44	44	ANC6	—	—	—	—	—	—	—	—	—	TX1(1) CK1(1)	—	—	SEG22 VLCD2	IOCC6	—	Y	—
RC7	26	1	1	1	ANC7	—	—	—	—	—	—	—	—	—	RX1(1) DT1(1)	—	—	SEG23 VLCD1	IOCC7	—	Y	—
RD0	19	34	38	38	AND0	—	—	—	—	—	—	—	—	—	—	—	—	SEG24	—	—	Y	—
RD1	20	35	39	39	AND1	—	—	—	—	—	—	—	—	—	—	—	—	SEG25	—	—	Y	—
RD2	21	36	40	40	AND2	—	—	—	—	—	—	—	—	—	—	—	—	COM5 SEG26	—	—	Y	—
RD3	22	37	41	41	AND3	—	—	—	—	—	—	—	—	—	—	—	—	COM4 SEG27	—	—	Y	—
RD4	27	2	2	2	AND4	—	—	—	—	—	—	—	—	—	—	—	—	SEG28	—	—	Y	—
RD5	28	3	3	3	AND5	—	—	—	—	—	—	—	—	—	—	—	—	SEG29	—	—	Y	—
RD6	29	4	4	4	AND6	—	—	—	—	—	—	—	—	—	—	—	—	SEG30	—	—	Y	—
RD7	30	5	5	5	AND7	—	—	—	—	—	—	—	—	—	—	—	—	SEG31	—	—	Y	—
RE0	8	23	25	25	ANE0	—	—	—	—	—	—	—	—	—	—	—	—	SEG32	—	—	Y	—
RE1	9	24	26	26	ANE1	—	—	—	—	—	—	—	—	—	—	—	—	COM6 SEG33	—	—	Y	—
RE2	10	25	27	27	ANE2	—	—	—	—	—	—	—	—	—	—	—	—	COM7 SEG34	—	—	Y	—
RE3	1	16	18	18	—	—	—	—	—	—	—	—	—	—	—	—	—	—	IOCE3	—	Y	$\overline{MCLR}$

© 2017-2019 Microchip Technology Inc.

TABLE 4: 40/44-PIN ALLOCATION TABLE (PIC16(L)F19175/76) (CONTINUED)

I/O(2)	40-Pin PDIP	40-Pin UQFN	44-Pin TQFP	44-Pin QFN	ADC	Reference	Comparator	Zero-Cross Detect	DAC	Timers/SMT	CCP	PWM	CWG	MSSP	EUSART	CLC	RTCC	LCD	Interrupt-on-Change	High Current	Pull-up	Basic
VLCD3	24	39	43	43	—	—	—	—	—	—	—	—	—	—	—	—	—	VLCD3	—	—	—	—
VDD	11 32	7 26	7 28	7 28	—	—	—	—	—	—	—	—	—	—	—	—	—	—	—	—	—	VDD
VSS	12 31	6 27	6 29	6 30	—	—	—	—	—	—	—	—	—	—	—	—	—	—	—	—	—	VSS
OUT(2)	—	—	—	—	ADGRDA ADGRDB	—	C1OUT C2OUT	—	—	TMR0	CCP1 CCP2	PWM3 PWM4	CWG1A CWG1B CWG1C CWG1D	SDO SCK SCL SDA	TX1 DT1 CK1 TX2 DT2 CK2	CLC1OUT	RTCC	—	—	—	—	—

Note 1: This is a PPS remappable input signal. The input function may be moved from the default location shown to one of several other PORTx pins.
2: All digital output signals shown in this row are PPS remappable. These signals may be mapped to output onto one or more PORTx pin options.
3: This is a bidirectional signal. For normal module operation, the firmware should map this signal to the same pin in both the PPS input and PPS output registers.
4: These pins are configured for I^2C logic levels. PPS assignments to the other pins will operate, but input logic levels will be standard TTL/ST as selected by INLCVL register, instead of the I^2C specific or SMBUS input buffer thresholds.
5: These are alternative I^2C logic levels pins.
6: In I^2C logic levels configuration, these pins can operate as either SCL and SDA pins.

© 2017-2019 Microchip Technology Inc.

TABLE 5: 48-PIN ALLOCATION TABLE (PIC16(L)F19185/86)

I/O(2)	48-Pin TQFP/QFN	ADC	Reference	Comparator	Zero-Cross Detect	DAC	Timers/SMT	CCP	PWM	CWG	MSSP	EUSART	CLC	RTCC	LCD	Interrupt-on-Change	High Current	Pull-up	Basic
RA0	21	ANA0	—	C1IN0- C2IN0-	—	—	—	—	—	—	—	—	CLCIN0(1)	—	SEG0	IOCA0	—	Y	—
RA1	22	ANA1	—	C1IN1- C2IN1-	—	—	—	—	—	—	—	—	CLCIN1(1)	—	SEG1	IOCA1	—	Y	—
RA2	23	ANA2	—	C1IN0+ C2IN0+	—	DAC1OUT1	—	—	—	—	—	—	—	—	SEG2	IOCA2	—	Y	—
RA3	24	ANA3	VREF+	C1IN1+	—	DAC1REF+	—	—	—	—	—	—	—	—	SEG3	IOCA3	—	Y	—
RA4	25	ANA4	—	—	—	—	T0CKI(1)	—	—	—	—	—	—	—	SEG4 COM3	IOCA4	—	Y	—
RA5	26	—	—	—	—	—	—	—	—	—	$\overline{SS}$(1)	—	—	—	—	IOCA5	—	Y	VBAT
RA6	33	ANA6	—	—	—	—	—	—	—	—	—	—	—	—	SEG6	IOCA6	—	Y	CLKOUT OSC2
RA7	32	ANA7	—	—	—	—	—	—	—	—	—	—	—	—	SEG7	IOCA7	—	Y	OSC1 CLKIN
RB0	8	ANB0	—	C2IN1+	ZCD	—	—	—	—	CWG1IN(1)	—	—	—	—	SEG8	IOCB0	—	Y	INTPPS
RB1	9	ANB1	—	C1IN3- C2IN3-	—	—	—	—	—	—	SCL, SDA(1, 3, 4, 5, 6)	—	—	—	SEG9	IOCB1	HIB1	Y	—
RB2	10	ANB2	—	—	—	—	—	—	—	—	SCL, SDA(1, 3, 4, 5, 6)	—	—	—	SEG10 CFLY1	IOCB2	—	Y	—
RB3	11	ANB3	—	C1IN2- C2IN2-	—	—	—	—	—	—	—	—	—	—	SEG11 CFLY2	IOCB3	—	Y	—
RB4	16	ANB4 ADCACT(1)	—	—	—	—	—	—	—	—	—	—	—	—	COM0	IOCB4	—	Y	—
RB5	17	ANB5	—	—	—	—	T1G(1)	—	—	—	—	—	—	—	SEG13 COM1	IOCB5	—	Y	—
RB6	18	ANB6	—	—	—	—	—	—	—	—	—	TX2(1) CK2(1)	CLCIN2(1)	—	SEG14	IOCB6	—	Y	ICDCLK/ ICSPCLK
RB7	19	ANB7	—	—	—	DAC1OUT2	—	—	—	—	—	RX2(1) DT2(1)	CLCIN3(1)	—	SEG15	IOCB7	—	Y	ICDDAT/ ICSPDAT

Note 1: This is a PPS remappable input signal. The input function may be moved from the default location shown to one of several other PORTx pins.
2: All digital output signals shown in this row are PPS remappable. These signals may be mapped to output onto one or more PORTx pin options.
3: This is a bidirectional signal. For normal module operation, the firmware should map this signal to the same pin in both the PPS input and PPS output registers.
4: These pins are configured for I^2C logic levels. PPS assignments to the other pins will operate, but input logic levels will be standard TTL/ST as selected by INLCVL register, instead of the I^2C specific or SMBUS input buffer thresholds.
5: These are alternative I^2C logic levels pins.
6: In I^2C logic levels configuration, these pins can operate as either SCL and SDA pins.

© 2017-2019 Microchip Technology Inc.

TABLE 5: 48-PIN ALLOCATION TABLE (PIC16(L)F19185/86) (CONTINUED)

I/O(2)	48-Pin TQFP/QFN	ADC	Reference	Comparator	Zero-Cross Detect	DAC	Timers/SMT	CCP	PWM	CWG	MSSP	EUSART	CLC	RTCC	LCD	Interrupt-on-Change	High Current	Pull-up	Basic
RC0	34	—	—	—	—	—	T1CKI(1) SMTWIN1(1)	—	—	—	—	—	—	—	—	IOCC0	—	Y	SOSCO
RC1	35	—	—	—	—	—	SMTSIG1(1) T4IN(1)	CCP2(1)	—	—	—	—	—	—	—	IOCC1	—	Y	SOSCI
RC2	40	ANC2	—	—	—	—	—	CCP1(1)	—	—	—	—	—	—	COM2 SEG18	IOCC2	—	Y	—
RC3	41	ANC3	—	—	—	—	T2IN(1)	—	—	—	SCK(1) SCL(1,3,4)	—	—	—	SEG19	IOCC3	—	Y	—
RC4	46	ANC4	—	—	—	—	—	—	—	—	SDI(1) SDA(1,3,4)	—	—	—	SEG20	IOCC4	—	Y	—
RC6	48	ANC6	—	—	—	—	—	—	—	—	—	TX1(1) CK1(1)	—	—	SEG22 VLCD2	IOCC6	—	Y	—
RC7	1	ANC7	—	—	—	—	—	—	—	—	—	RX1(1) DT1(1)	—	—	SEG23 VLCD1	IOCC7	—	Y	—
RD0	42	AND0	—	—	—	—	—	—	—	—	—	—	—	—	SEG24	—	—	Y	—
RD1	43	AND1	—	—	—	—	—	—	—	—	—	—	—	—	SEG25	—	—	Y	—
RD2	44	AND2	—	—	—	—	—	—	—	—	—	—	—	—	COM5 SEG26	—	—	Y	—
RD3	45	AND3	—	—	—	—	—	—	—	—	—	—	—	—	COM4 SEG27	—	—	Y	—
RD4	2	AND4	—	—	—	—	—	—	—	—	—	—	—	—	SEG28	—	—	Y	—
RD5	3	AND5	—	—	—	—	—	—	—	—	—	—	—	—	SEG29	—	—	Y	—
RD6	4	AND6	—	—	—	—	—	—	—	—	—	—	—	—	SEG30	—	—	Y	—
RD7	5	AND7	—	—	—	—	—	—	—	—	—	—	—	—	SEG31	—	—	Y	—
RE0	27	ANE0	—	—	—	—	—	—	—	—	—	—	—	—	SEG32	—	—	Y	—
RE1	28	ANE1	—	—	—	—	—	—	—	—	—	—	—	—	COM6 SEG33	—	—	Y	—
RE2	29	ANE2	—	—	—	—	—	—	—	—	—	—	—	—	COM7 SEG34	—	—	Y	—
RE3	20	—	—	—	—	—	—	—	—	—	—	—	—	—	—	IOCE3	—	Y	$\overline{\text{MCLR}}$

Note 1: This is a PPS remappable input signal. The input function may be moved from the default location shown to one of several other PORTx pins.
2: All digital output signals shown in this row are PPS remappable. These signals may be mapped to output onto one or more PORTx pin options.
3: This is a bidirectional signal. For normal module operation, the firmware should map this signal to the same pin in both the PPS input and PPS output registers.
4: These pins are configured for I^2C logic levels. PPS assignments to the other pins will operate, but input logic levels will be standard TTL/ST as selected by INLCVL register, instead of the I^2C specific or SMBUS input buffer thresholds.
5: These are alternative I^2C logic levels pins.
6: In I^2C logic levels configuration, these pins can operate as either SCL and SDA pins.

© 2017-2019 Microchip Technology Inc.

TABLE 5: 48-PIN ALLOCATION TABLE (PIC16(L)F19185/86) (CONTINUED)

I/O(2)	48-Pin TQFP/QFN	ADC	Reference	Comparator	Zero-Cross Detect	DAC	Timers/SMT	CCP	PWM	CWG	MSSP	EUSART	CLC	RTCC	LCD	Interrupt-on-Change	High Current	Pull-up	Basic
RF0	36	ANF0	—	—	—	—	—	—	—	—	—	—	—	—	SEG40	—	—	Y	—
RF1	37	ANF1	—	—	—	—	—	—	—	—	—	—	—	—	SEG41	—	—	Y	—
RF2	38	ANF2	—	—	—	—	—	—	—	—	—	—	—	—	SEG42	—	—	Y	—
RF3	39	ANF3	—	—	—	—	—	—	—	—	—	—	—	—	SEG43	—	—	Y	—
RF4	12	ANF4	—	—	—	—	—	—	—	—	—	—	—	—	SEG44	—	—	Y	—
RF5	13	ANF5	—	—	—	—	—	—	—	—	—	—	—	—	SEG45	—	—	Y	—
RF6	14	ANF6	—	—	—	—	—	—	—	—	—	—	—	—	SEG46	—	—	Y	—
RF7	15	ANF7	—	—	—	—	—	—	—	—	—	—	—	—	SEG47	—	—	Y	—
VLCD3	47	—	—	—	—	—	—	—	—	—	—	—	—	—	VLCD3	—	—	Y	—
VDD	7 30	—	—	—	—	—	—	—	—	—	—	—	—	—	—	—	—	Y	VDD
VSS	6 31	—	—	—	—	—	—	—	—	—	—	—	—	—	—	—	—	Y	VSS
OUT(2)	—	ADGRDA ADGRDB	—	C1OUT C2OUT	—	—	TMR0	CCP1 CCP2	PWM3 PWM4	CWG1A CWG1B CWG1C CWG1D	SDO SCK SCL SDA	TX1 DT1 CK1 TX2 DT2 CK2	CLC1OUT	RTCC	—	—	—	—	—

Note 1: This is a PPS remappable input signal. The input function may be moved from the default location shown to one of several other PORTx pins.

2: All digital output signals shown in this row are PPS remappable. These signals may be mapped to output onto one or more PORTx pin options.

3: This is a bidirectional signal. For normal module operation, the firmware should map this signal to the same pin in both the PPS input and PPS output registers.

4: These pins are configured for I^2C logic levels. PPS assignments to the other pins will operate, but input logic levels will be standard TTL/ST as selected by INLCVL register, instead of the I^2C specific or SMBUS input buffer thresholds.

5: These are alternative I^2C logic levels pins.

6: In I^2C logic levels configuration, these pins can operate as either SCL and SDA pins.

© 2017-2019 Microchip Technology Inc.

Table of Contents

Pin Allocation Tables 9
1.0 Device Overview 19
2.0 Guidelines for Getting Started With PIC16(L)F19155/56/75/76/85/86 Microcontrollers 40
3.0 Enhanced Mid-Range CPU 43
4.0 Memory Organization 45
5.0 Device Configuration 119
6.0 Device Information Area 129
7.0 Device Configuration Information 131
8.0 Resets and Vbat 132
9.0 Oscillator Module (with Fail-Safe Clock Monitor) 143
10.0 Interrupts 160
11.0 Power-Saving Operation Modes 184
12.0 Windowed Watchdog Timer (WWDT) 192
13.0 Nonvolatile Memory (NVM) Control 200
14.0 I/O Ports 219
15.0 Peripheral Pin Select (PPS) Module 259
16.0 Peripheral Module Disable (PMD) 268
17.0 Interrupt-On-Change (IOC) 275
18.0 Fixed Voltage Reference (FVR) 283
19.0 Analog-to-Digital Converter with Computation (ADC2) Module 287
20.0 Temperature Indicator Module (TIM) 327
21.0 5-Bit Digital-to-Analog Converter (DAC1) Module 330
22.0 Comparator Module 335
23.0 Zero-Cross Detection (ZCD) Module 345
24.0 Real-Time Clock and Calendar (RTCC) 351
25.0 Timer0 Module 366
26.0 Timer1 Module with Gate Control 372
27.0 Timer2/4 Module With Hardware Limit Timer (HLT) 385
28.0 Signal Measurement Timer (SMT) 409
29.0 Capture/Compare/PWM Modules 452
30.0 Pulse-Width Modulation (PWM) 464
31.0 Complementary Waveform Generator (CWG) Module 471
32.0 Configurable Logic Cell (CLC) 495
33.0 Master Synchronous Serial Port (MSSP) Modules 513
34.0 Enhanced Universal Synchronous Asynchronous Receiver Transmitter (EUSART1/2) 564
35.0 Liquid Crystal Display (LCD) Controller 592
36.0 In-Circuit Serial Programming™ (ICSP™) 628
37.0 Instruction Set Summary 630
38.0 Register Summary 643
39.0 Electrical Specifications 667
40.0 DC and AC Characteristics Graphs and Charts 697
41.0 Development Support 719
42.0 Packaging Information 723
The Microchip WebSite 751
Customer Change Notification Service 751
Customer Support 751
Product Identification System 752

TO OUR VALUED CUSTOMERS

It is our intention to provide our valued customers with the best documentation possible to ensure successful use of your Microchip products. To this end, we will continue to improve our publications to better suit your needs. Our publications will be refined and enhanced as new volumes and updates are introduced.

If you have any questions or comments regarding this publication, please contact the Marketing Communications Department via E-mail at **docerrors@microchip.com**. We welcome your feedback.

Most Current Data Sheet

To obtain the most up-to-date version of this data sheet, please register at our Worldwide Website at:

http://www.microchip.com

You can determine the version of a data sheet by examining its literature number found on the bottom outside corner of any page. The last character of the literature number is the version number, (e.g., DS30000000A is version A of document DS30000000).

Errata

An errata sheet, describing minor operational differences from the data sheet and recommended workarounds, may exist for current devices. As device/documentation issues become known to us, we will publish an errata sheet. The errata will specify the revision of silicon and revision of document to which it applies.

To determine if an errata sheet exists for a particular device, please check with one of the following:

- Microchip's Worldwide Website; **http://www.microchip.com**
- Your local Microchip sales office (see last page)

When contacting a sales office, please specify which device, revision of silicon and data sheet (include literature number) you are using.

Customer Notification System

Register on our website at **www.microchip.com** to receive the most current information on all of our products.

1.0 DEVICE OVERVIEW

The PIC16(L)F19155/56/75/76/85/86 are described within this data sheet. The PIC16(L)F19155/56/75/76/85/86 devices are available in 48-pin TQFP and UQFN, 44-pin TQFP and UQFN, 40-pin PDIP and 28-pin SPDIP, SOIC, SSOP and UQFN packages. Figure 1-1 shows a block diagram of the PIC16(L)F19155/56/75/76/85/86 devices. Table 1-2 shows the pinout descriptions.

Reference Table 1-1 for peripherals available per device.

TABLE 1-1: DEVICE PERIPHERAL SUMMARY

Peripheral		PIC16(L)F19155/56/75/76/85/86
Analog-to-Digital Converter with Computation (ADC[2])		●
Digital-to-Analog Converter (DAC1)		●
Fixed Voltage Reference (FVR)		●
Enhanced Universal Synchronous/Asynchronous Receiver/ Transmitter (EUSART1 and EUSART2)		●
Temperature Indicator Module (TIM)		●
Zero-Cross Detect (ZCD1)		●
Real-Time Calendar and Clock (RTCC)		●
Liquid Crystal Display (LCD)		●
Capture/Compare/PWM Modules (CCP)		
	CCP1	●
	CCP2	●
Comparator Module (Cx)		
	C1	●
	C2	●
Configurable Logic Cell (CLC)		
	CLC1	●
	CLC2	●
	CLC3	●
	CLC4	●
Complementary Waveform Generator (CWG)		
	CWG1	●
Master Synchronous Serial Ports (MSSP)		
	MSSP1	●
Pulse-Width Modulator (PWM)		
	PWM3	●
	PWM4	●
Signal Measure Timer (SMT)		
	SMT1	●
Timers		
	Timer0	●
	Timer1	●
	Timer2	●
	Timer4	●

1.1 Register and Bit Naming Conventions

1.1.1 REGISTER NAMES

When there are multiple instances of the same peripheral in a device, the peripheral control registers will be depicted as the concatenation of a peripheral identifier, peripheral instance, and control identifier. The control registers section will show just one instance of all the register names with an ‘x’ in the place of the peripheral instance number. This naming convention may also be applied to peripherals when there is only one instance of that peripheral in the device to maintain compatibility with other devices in the family that contain more than one.

1.1.2 BIT NAMES

There are two variants for bit names:

- Short name: Bit function abbreviation
- Long name: Peripheral abbreviation + short name

1.1.2.1 Short Bit Names

Short bit names are an abbreviation for the bit function. For example, some peripherals are enabled with the EN bit. The bit names shown in the registers are the short name variant.

Short bit names are useful when accessing bits in C programs. The general format for accessing bits by the short name is *RegisterName*bits.*ShortName*. For example, the enable bit, EN, in the COG1CON0 register can be set in C programs with the instruction `COG1CON0bits.EN = 1`.

Short names are generally not useful in assembly programs because the same name may be used by different peripherals in different bit positions. When this occurs, during the include file generation, all instances of that short bit name are appended with an underscore plus the name of the register in which the bit resides to avoid naming contentions.

1.1.2.2 Long Bit Names

Long bit names are constructed by adding a peripheral abbreviation prefix to the short name. The prefix is unique to the peripheral, thereby making every long bit name unique. The long bit name for the COG1 enable bit is the COG1 prefix, G1, appended with the enable bit short name, EN, resulting in the unique bit name G1EN.

Long bit names are useful in both C and assembly programs. For example, in C the COG1CON0 enable bit can be set with the `G1EN = 1` instruction. In assembly, this bit can be set with the `BSF COG1CON0,G1EN` instruction.

1.1.2.3 Bit Fields

Bit fields are two or more adjacent bits in the same register. Bit fields adhere only to the short bit naming convention. For example, the three Least Significant bits of the COG1CON0 register contain the mode control bits. The short name for this field is MD. There is no long bit name variant. Bit field access is only possible in C programs. The following example demonstrates a C program instruction for setting the COG1 to the Push-Pull mode:

```
COG1CON0bits.MD = 0x5;
```

Individual bits in a bit field can also be accessed with long and short bit names. Each bit is the field name appended with the number of the bit position within the field. For example, the Most Significant mode bit has the short bit name MD2 and the long bit name is G1MD2. The following two examples demonstrate assembly program sequences for setting the COG1 to Push-Pull mode.

EXAMPLE 1-1: ASSEMBLY SEQUENCE 1 FOR SETTING COG1 TO PUSH-PULL MODE

```
MOVLW   ~(1<<G1MD1)
ANDWF   COG1CON0,F
MOVLW   1<<G1MD2 | 1<<G1MD0
IORWF   COG1CON0,F
```

EXAMPLE 1-2: ASSEMBLY SEQUENCE 2 FOR SETTING COG1 TO PUSH-PULL MODE

```
BSF     COG1CON0,G1MD2
BCF     COG1CON0,G1MD1
BSF     COG1CON0,G1MD0
```

1.1.3 REGISTER AND BIT NAMING EXCEPTIONS

1.1.3.1 Status, Interrupt, and Mirror Bits

Status, interrupt enables, interrupt flags, and mirror bits are contained in registers that span more than one peripheral. In these cases, the bit name shown is unique so there is no prefix or short name variant.

1.1.3.2 Legacy Peripherals

There are some peripherals that do not strictly adhere to these naming conventions. Peripherals that have existed for many years and are present in almost every device are the exceptions. These exceptions were necessary to limit the adverse impact of the new conventions on legacy code. Peripherals that do adhere to the new convention will include a table in the registers section indicating the long name prefix for each peripheral instance. Peripherals that fall into the exception category will not have this table. These peripherals include, but are not limited to, the following:

- EUSART
- MSSP

FIGURE 1-1: PIC16(L)F19155/56/75/76/85/86 BLOCK DIAGRAM

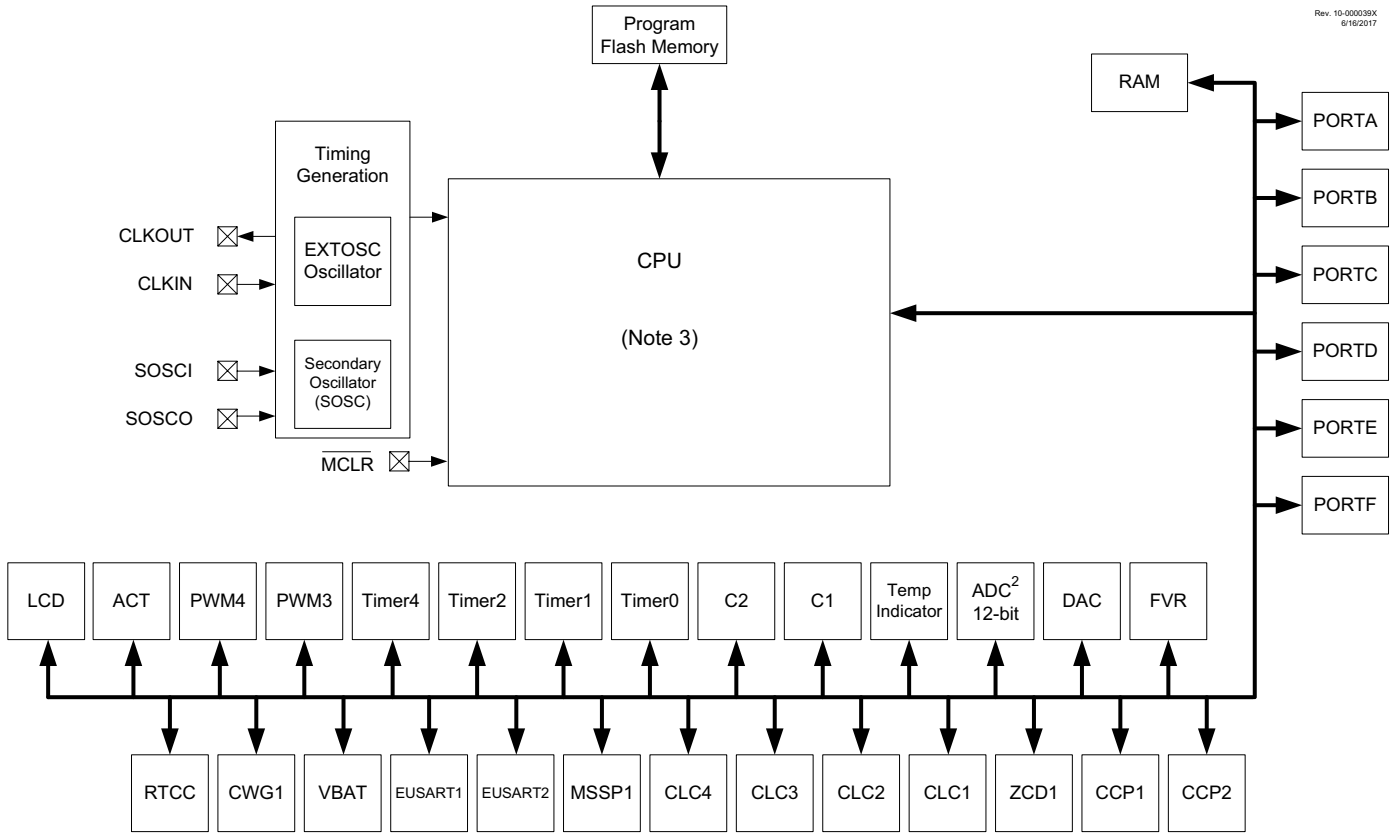

Note 1: See applicable chapters for more information on peripherals.

2: See Table 1-1 for peripherals available on specific devices.

3: See Figure 3-1.

© 2017-2019 Microchip Technology Inc.

TABLE 1-2: PIC16(L)F19155/56 PINOUT DESCRIPTION

Name	Function	Input Type	Output Type	Description
RA0/C1IN0-/C2IN0-/ANA0/CLCIN0(1)/IOCA0/SEG0	RA0	TTL/ST	CMOS/OD	General purpose I/O.
	C1IN0-	AN		Comparator negative input.
	C2IN0-	AN		Comparator negative input.
	ANA0	AN		ADC Channel input.
	CLCIN0(1)	—		Configurable Logic Cell source input.
	IOCA0	TTL/ST		Interrupt-on-change input.
	SEG0	—	AN	LCD Analog output.
RA1/C1IN1-/C2IN1-/ANA1/CLCIN1(1)/SEG1	RA1	TTL/ST	CMOS/OD	General purpose I/O.
	C1IN1-	AN		Comparator negative input.
	C2IN1-	AN		Comparator negative input.
	ANA1	AN		ADC Channel input.
	CLCIN1(1)	—		Configurable Logic Cell source input.
	IOCA1	TTL/ST		Interrupt-on-change input.
	SEG1	—	AN	LCD Analog output.
RA2/C1IN0+/C2IN0+/ANA2/DAC1OUT1/IOCA2/SEG2	RA2	TTL/ST	CMOS/OD	General purpose I/O.
	C1IN0+	AN	—	Comparator positive input.
	C2IN0+	AN	—	Comparator positive input.
	ANA2	AN	—	ADC Channel input.
	DAC1OUT1	—	AN	Digital-to-Analog Converter output.
	IOCA2	TTL/ST	—	Interrupt-on-change input.
	SEG2	—	AN	LCD Analog output.
RA3/C1IN1+/ANA3/SEG3/IOCA3/VREF+ (ADC)/VREF+ (DAC1)	RA3	TTL/ST	CMOS/OD	General purpose I/O.
	C1IN1+	AN	—	Comparator positive input.
	ANA3	AN	—	ADC Channel input.
	SEG3	—	AN	LCD Analog output.
	IOCA3	TTL/ST	—	Interrupt-on-change input.
	VREF+ (ADC)	AN	—	ADC positive reference.
	VREF+ (DAC1)	AN	—	DAC positive reference.
RA4/ANA4/T0CKI(1)/IOCA4/SEG4/COM3	RA4	TTL/ST	CMOS/OD	General purpose I/O.
	ANA4	AN	—	ADC Channel input.
	T0CKI(1)	—	—	Timer0 clock input.
	IOCA4	TTL/ST	—	Interrupt-on-change input.
	SEG4	—	AN	LCD Analog output.
	COM3	—	AN	LCD Driver Common Outputs.

Legend: AN = Analog input or output; CMOS = CMOS compatible input or output; OD = Open-Drain; TTL = TTL compatible input‘; ST = Schmitt Trigger input with CMOS levels; I^2C = Schmitt Trigger input with I^2C; HV = High Voltage; XTAL = Crystal levels

Note 1: This is a PPS remappable input signal. The input function may be moved from the default location shown to one of several other PORTx pins. Refer to Table 14-2 for details on which PORT pins may be used for this signal.

2: All output signals shown in this row are PPS remappable. These signals may be mapped to output onto one of several PORTx pin options as described in Table 14-3.

3: This is a bidirectional signal. For normal module operation, the firmware should map this signal to the same pin in both the PPS input and PPS output registers.

4: These pins are configured for I^2C logic levels. The SCLx/SDAx signals may be assigned to any of the RB1/RB2/RC3/RC4 pins. PPS assignments to the other pins (e.g., RA5) will operate, but input logic levels will be standard TTL/ST, as selected by the INLVL register, instead of the I^2C specific or SMBus input buffer thresholds.

TABLE 1-2: PIC16(L)F19155/56 PINOUT DESCRIPTION (CONTINUED)

Name	Function	Input Type	Output Type	Description
RA5/SS(1)/IOCA5/VBAT	RA5	TTL/ST	CMOS/OD	General purpose input.
	SS(1)	—	—	MSSP SPI slave select input.
	IOCA5	TTL/ST	—	Interrupt-on-change input.
	VBAT	AN	—	RTCC Back-up Battery.
RA6/ANA6/IOCA6/SEG6/CLKOUT	RA6	TTL/ST	CMOS/OD	General purpose I/O.
	ANA6	AN	—	ADC Channel input.
	IOCA6	—	—	Interrupt-on-change input.
	SEG6	—	AN	LCD Analog output.
	CLKOUT	TTL/ST	—	FOSC/4 digital output.
RA7/ANA7/SEG7/CLKIN	RA7	TTL/ST	CMOS/OD	General purpose I/O.
	ANA7	AN	—	ADC Channel input.
	SEG7	—	AN	LCD Analog output.
	CLKIN	ST	—	External Clock driver input.
RB0/CWG1IN(1)/C2IN1+/IOCB0/ANB0/SEG8/ZCD	RB0	TTL/ST	CMOS/OD	General purpose I/O.
	CWG1IN(1)	TTL/ST	—	Complementary Waveform Generator input
	C2IN1+	AN	—	Comparator positive input.
	IOCB0	TTL/ST	—	Interrupt-on-change input.
	ANB0	AN	—	ADC Channel input.
	SEG8	-	AN	LCD Analog output.
	ZCD	AN	—	Zero-cross detect input pin (with constant current sink/source).
RB1/C1IN3-/C2IN3-/IOCB1/SCL(3,4)/SCK(1)/ANB1/HIB1/SEG9	RB1	TTL/ST	CMOS/OD	General purpose I/O.
	C1IN3-	AN	—	Comparator negative input.
	C2IN3-	AN	—	Comparator negative input.
	IOCB1	TTL/ST	—	Interrupt-on-change input.
	SCL(3,4)	I^2C	OD	MSSP I^2Cclock input/output.
	SCK(1)	TTL/ST	—	MSSP SPI clock input/output.
	ANB1	AN	—	ADC Channel input.
	HIB1	TTL/ST	—	High current output.
	SEG9	—	AN	LCD Analog output.
RB2/IOCB2/SDA(3,4)/SDI(1)/ANB2/SEG10/COM7/SEGCFLY1	RB2	TTL/ST	CMOS/OD	General purpose I/O.
	IOCB2	TTL/ST	—	Interrupt-on-change input.
	SDA(3,4)	I^2C	OD	MSSP I^2C data input/output.
	SDI(1)	TTL/ST	—	MSSP SPI serial data in.
	ANB2	AN	—	ADC Channel input.
	SEG10	—	AN	LCD Analog output.
	COM7	—	AN	LCD Driver Common Outputs.
	SEGCFLY1	AN	—	LCD Drive Charge Pump Capacitor Inputs

Legend: AN = Analog input or output; CMOS = CMOS compatible input or output; OD = Open-Drain; TTL = TTL compatible input‘; ST = Schmitt Trigger input with CMOS levels; I^2C = Schmitt Trigger input with I^2C; HV = High Voltage; XTAL = Crystal levels

Note 1: This is a PPS remappable input signal. The input function may be moved from the default location shown to one of several other PORTx pins. Refer to Table 14-2 for details on which PORT pins may be used for this signal.

2: All output signals shown in this row are PPS remappable. These signals may be mapped to output onto one of several PORTx pin options as described in Table 14-3.

3: This is a bidirectional signal. For normal module operation, the firmware should map this signal to the same pin in both the PPS input and PPS output registers.

4: These pins are configured for I^2C logic levels. The SCLx/SDAx signals may be assigned to any of the RB1/RB2/RC3/RC4 pins. PPS assignments to the other pins (e.g., RA5) will operate, but input logic levels will be standard TTL/ST, as selected by the INLVL register, instead of the I^2C specific or SMBus input buffer thresholds.

TABLE 1-2: PIC16(L)F19155/56 PINOUT DESCRIPTION (CONTINUED)

Name	Function	Input Type	Output Type	Description
RB3/C1IN2-/C2IN2-/IOCB3/ANB3/SEG11/COM6/SEGCFLY2	RB3	TTL/ST	CMOS/OD	General purpose I/O.
	C1IN2-	AN	—	Comparator negative input.
	C2IN2-	AN	—	Comparator negative input.
	IOCB3	TTL/ST	—	Interrupt-on-change input.
	ANB3	AN	—	ADC Channel input.
	SEG11	—	AN	LCD Analog output.
	COM6	—	AN	LCD Driver Common Outputs.
	SEGCFLY2	AN	—	LCD Drive Charge Pump Capacitor Inputs
RB4/ADCACT(1)/IOCB4/ANB4/COM0	RB4	TTL/ST	CMOS/OD	General purpose I/O.
	ADCACT(1)	TTL/ST	—	ADC Auto-Conversion Trigger input
	IOCB4	TTL/ST	—	Interrupt-on-change input.
	ANB4	AN	—	ADC Channel input.
	COM0	—	AN	LCD Driver Common Outputs.
RB5/T1G(1)/IOCB5/ANB5/SEG13/COM1	RB5	TTL/ST	CMOS/OD	General purpose I/O.
	T1G(1)	—	—	Timer1 Gate input.
	IOCB5	TTL/ST	—	Interrupt-on-change input.
	ANB5	AN	—	ADC Channel input.
	SEG13	—	AN	LCD Analog output.
	COM1	—	AN	LCD Driver Common Outputs.
RB6/CK2(3)/TX2(1)/CLCIN2(1)/IOCB6/ANB6/SEG14/ICSPCLK	RB6	TTL/ST	CMOS/OD	General purpose I/O.
	CK2(3)	—	—	EUSART synchronous clock out
	TX2(1)	—	—	EUSART asynchronous TX data out
	CLCIN2(1)	—	—	Configurable Logic Cell source input.
	IOCB6	TTL/ST	—	Interrupt-on-change input.
	ANB6	AN	—	ADC Channel input.
	SEG14	—	AN	LCD Analog output.
	ICSPCLK	ST	—	In-Circuit Serial Programming™ and debugging clock input.
RB7/DK2(3)/RX2(1)/CLCIN3(1)/IOCB7/ANB7/SEG15/DAC1OUT2/ICSPDAT	RB7	TTL/ST	CMOS/OD	General purpose I/O.
	DK2(3)	—	—	EUSART synchronous data output
	RX2(1)	—	—	EUSART receive input.
	CLCIN3(1)	—	—	Configurable Logic Cell source input.
	IOCB7	TTL/ST	—	Interrupt-on-change input.
	ANB7	AN	—	ADC Channel input.
	SEG15	—	AN	LCD Analog output.
	DAC1OUT2	—	AN	Digital-to-Analog Converter output.
	ICSPDAT	TTL/ST	TTL/ST	In-Circuit Serial Programming™ and debugging data input/output.

Legend: AN = Analog input or output; CMOS = CMOS compatible input or output; OD = Open-Drain; TTL = TTL compatible input‘; ST = Schmitt Trigger input with CMOS levels; I^2C = Schmitt Trigger input with I^2C; HV = High Voltage; XTAL = Crystal levels

Note 1: This is a PPS remappable input signal. The input function may be moved from the default location shown to one of several other PORTx pins. Refer to Table 14-2 for details on which PORT pins may be used for this signal.

2: All output signals shown in this row are PPS remappable. These signals may be mapped to output onto one of several PORTx pin options as described in Table 14-3.

3: This is a bidirectional signal. For normal module operation, the firmware should map this signal to the same pin in both the PPS input and PPS output registers.

4: These pins are configured for I^2C logic levels. The SCLx/SDAx signals may be assigned to any of the RB1/RB2/RC3/RC4 pins. PPS assignments to the other pins (e.g., RA5) will operate, but input logic levels will be standard TTL/ST, as selected by the INLVL register, instead of the I^2C specific or SMBus input buffer thresholds.

TABLE 1-2: PIC16(L)F19155/56 PINOUT DESCRIPTION (CONTINUED)

Name	Function	Input Type	Output Type	Description
RC0/T1CKI(1)/SMTWIN1(1)/IOCC0/SOSCO	RC0	TTL/ST	CMOS/OD	General purpose I/O.
	T1CKI(1)	—	—	Timer1 clock input.
	SMTWIN1(1)	—	—	SMT window input.
	IOCC0	TTL/ST	—	Interrupt-on-change input.
	SOSCO	#VALUE!	AN	32.768 kHz secondary oscillator crystal driver output.
RC1/T4IN(1)/SMTSIG1(1)/CCP2(1)/IOCC1/SOSCI	RC1	TTL/ST	CMOS/OD	General purpose I/O.
	T4IN(1)	—	—	Timer4 external input.
	SMTSIG1(1)	—	—	SMT signal input.
	CCP2(1)	—	—	CCP Capture Input.
	IOCC1	TTL/ST	—	Interrupt-on-change input.
	SOSCI	—	—	32.768 kHz secondary oscillator crystal driver input.
RC2/CCP1(1)/IOCC2/ANC2/SEG18/COM2	RC2	TTL/ST	CMOS/OD	General purpose I/O.
	CCP1(1)	—	—	CCP Capture Input.
	IOCC2	TTL/ST	—	Interrupt-on-change input.
	ANC2	AN	—	ADC Channel input.
	SEG18	—	AN	LCD Analog output.
	COM2	—	AN	LCD Driver Common Outputs.
RC3/T2IN/SCL(3,4)/SCK(1)/SEG19	RC3	TTL/ST	CMOS/OD	General purpose I/O.
	T2IN(1)	—	—	Timer2 external input.
	SCL(3,4)	I^2C	OD	MSSP I^2Cclock input/output.
	SCK(1)	TTL/ST	—	MSSP SPI clock input/output
	IOCC3	TTL/ST	—	Interrupt-on-change input.
	ANC3	AN	—	ADC Channel input.
	SEG19	—	AN	LCD Analog output.
RC4/SDA(3,4)/SDI(1)/IOCC4/ANC4/SEG20	RC4	TTL/ST	CMOS/OD	General purpose I/O.
	SDA(3,4)	TTL/ST	—	MSSP I^2C data input/output.
	SDI(1)	I^2C	OD	MSSP SPI serial data in.
	IOCC4	TTL/ST	—	Interrupt-on-change input.
	ANC4	AN	—	ADC Channel input.
	SEG20	—	AN	LCD Analog output.
RC6/CK1(3)/TX1(1)/IOCC6/ANC6/SEG22/COM5/VLCD2	RC6	TTL/ST	CMOS/OD	General purpose I/O.
	CK1(3)	—	—	EUSART synchronous clock out
	TX1(1)	—	—	EUSART asynchronous TX data out
	IOCC6	TTL/ST	—	Interrupt-on-change input.
	ANC6	AN	—	ADC Channel input.
	SEG22	—	AN	LCD Analog output.
	COM5	—	AN	LCD Driver Common Outputs.
	VLCD2	AN	—	LCD analog input

Legend: AN = Analog input or output; CMOS = CMOS compatible input or output; OD = Open-Drain; TTL = TTL compatible input‘; ST = Schmitt Trigger input with CMOS levels; I^2C = Schmitt Trigger input with I^2C; HV = High Voltage; XTAL = Crystal levels

Note 1: This is a PPS remappable input signal. The input function may be moved from the default location shown to one of several other PORTx pins. Refer to Table 14-2 for details on which PORT pins may be used for this signal.

2: All output signals shown in this row are PPS remappable. These signals may be mapped to output onto one of several PORTx pin options as described in Table 14-3.

3: This is a bidirectional signal. For normal module operation, the firmware should map this signal to the same pin in both the PPS input and PPS output registers.

4: These pins are configured for I^2C logic levels. The SCLx/SDAx signals may be assigned to any of the RB1/RB2/RC3/RC4 pins. PPS assignments to the other pins (e.g., RA5) will operate, but input logic levels will be standard TTL/ST, as selected by the INLVL register, instead of the I^2C specific or SMBus input buffer thresholds.

TABLE 1-2: PIC16(L)F19155/56 PINOUT DESCRIPTION (CONTINUED)

Name	Function	Input Type	Output Type	Description
RC7/DT1(3)/RX1(3)/IOCC7/ANC7/SEG23/COM4/VLCD1	RC7	TTL/ST	CMOS/OD	General purpose I/O.
	DT1(3)	—	—	EUSART synchronous data output
	RX1(1)	—	—	EUSART receive input.
	IOCC7	TTL/ST	—	Interrupt-on-change input.
	ANC7	AN	—	ADC Channel input.
	SEG23	—	AN	LCD Analog output.
	COM4	—	AN	LCD Driver Common Outputs.
	VLCD1	AN	—	LCD analog input
RE3/IOCE3/$\overline{\text{MCLR}}$	RE3	TTL/ST	CMOS/OD	General purpose I/O.
	IOCE3	TTL/ST	—	Interrupt-on-change input.
	$\overline{\text{MCLR}}$	ST	—	Master clear input with internal weak pull up resistor.
VLCD3	VLCD3	AN	—	LCD analog input
VDD	VDD	Power	P	Positive supply voltage input.
VSS	VSS	Power	P	Ground reference.

Legend: AN = Analog input or output; CMOS = CMOS compatible input or output; OD = Open-Drain; TTL = TTL compatible input‘; ST = Schmitt Trigger input with CMOS levels; I^2C = Schmitt Trigger input with I^2C; HV = High Voltage; XTAL = Crystal levels

Note 1: This is a PPS remappable input signal. The input function may be moved from the default location shown to one of several other PORTx pins. Refer to Table 14-2 for details on which PORT pins may be used for this signal.

2: All output signals shown in this row are PPS remappable. These signals may be mapped to output onto one of several PORTx pin options as described in Table 14-3.

3: This is a bidirectional signal. For normal module operation, the firmware should map this signal to the same pin in both the PPS input and PPS output registers.

4: These pins are configured for I^2C logic levels. The SCLx/SDAx signals may be assigned to any of the RB1/RB2/RC3/RC4 pins. PPS assignments to the other pins (e.g., RA5) will operate, but input logic levels will be standard TTL/ST, as selected by the INLVL register, instead of the I^2C specific or SMBus input buffer thresholds.

TABLE 1-3: PIC16(L)F19175/76 PINOUT DESCRIPTION

Name	Function	Input Type	Output Type	Description
RA0/C1IN0-/C2IN0-/ANA0/CLCIN0(1)/IOCA0/SEG0	RA0	TTL/ST	CMOS/OD	General purpose I/O.
	C1IN0-	AN	—	Comparator negative input.
	C2IN0-	AN	—	Comparator negative input.
	ANA0	AN	—	ADC Channel input.
	CLCIN0(1)	—	—	Configurable Logic Cell source input.
	IOCA0	TTL/ST	—	Interrupt-on-change input.
	SEG0	—	AN	LCD Analog output.
RA1/C1IN1-/C2IN1-/ANA1/CLCIN1(1)/SEG1	RA1	TTL/ST	CMOS/OD	General purpose I/O.
	C1IN1-	AN	—	Comparator negative input.
	C2IN1-	AN	—	Comparator negative input.
	ANA1	AN	—	ADC Channel input.
	CLCIN1(1)	—	—	Configurable Logic Cell source input.
	IOCA1	TTL/ST	—	Interrupt-on-change input.
	SEG1	—	AN	LCD Analog output.
RA2/C1IN0+/C2IN0+/ANA2/DAC1OUT1/IOCA2/SEG2	RA2	TTL/ST	CMOS/OD	General purpose I/O.
	C1IN0+	AN	—	Comparator positive input.
	C2IN0+	AN	—	Comparator positive input.
	ANA2	AN	—	ADC Channel input.
	DAC1OUT1	—	AN	Digital-to-Analog Converter output.
	IOCA2	TTL/ST	—	Interrupt-on-change input.
	SEG2	—	AN	LCD Analog output.
RA3/C1IN1+/ANA3/SEG3/IOCA3/VREF+ (ADC)/VREF+ (DAC1)	RA3	TTL/ST	CMOS/OD	General purpose I/O.
	C1IN1+	AN	—	Comparator positive input.
	ANA3	AN	—	ADC Channel input.
	SEG3	—	AN	LCD Analog output.
	IOCA3	TTL/ST	—	Interrupt-on-change input.
	VREF+ (ADC)	AN	—	ADC positive reference.
	VREF+ (DAC1)	AN	—	DAC positive reference.
RA4/ANA4/T0CKI(1)/IOCA4/SEG4/COM3	RA4	TTL/ST	CMOS/OD	General purpose I/O.
	ANA4	AN	—	ADC Channel input.
	T0CKI(1)	—	—	Timer0 clock input.
	IOCA4	TTL/ST	—	Interrupt-on-change input.
	SEG4	—	AN	LCD Analog output.
	COM3	—	AN	LCD Driver Common Outputs.

Legend: AN = Analog input or output; CMOS = CMOS compatible input or output; OD = Open-Drain; TTL = TTL compatible input‘; ST = Schmitt Trigger input with CMOS levels; I^2C = Schmitt Trigger input with I^2C; HV = High Voltage; XTAL = Crystal levels

Note 1: This is a PPS remappable input signal. The input function may be moved from the default location shown to one of several other PORTx pins. Refer to Table 14-2 for details on which PORT pins may be used for this signal.

2: All output signals shown in this row are PPS remappable. These signals may be mapped to output onto one of several PORTx pin options as described in Table 14-3.

3: This is a bidirectional signal. For normal module operation, the firmware should map this signal to the same pin in both the PPS input and PPS output registers.

4: These pins are configured for I^2C logic levels. The SCLx/SDAx signals may be assigned to any of the RB1/RB2/RC3/RC4 pins. PPS assignments to the other pins (e.g., RA5) will operate, but input logic levels will be standard TTL/ST, as selected by the INLVL register, instead of the I^2C specific or SMBus input buffer thresholds.

TABLE 1-3: PIC16(L)F19175/76 PINOUT DESCRIPTION (CONTINUED)

Name	Function	Input Type	Output Type	Description
RA5/SS(1)/IOCA5/VBAT	RA5	TTL/ST	CMOS/OD	General purpose I/O.
	SS(1)	TTL/ST	—	MSSP SPI slave select input.
	IOCA5	TTL/ST	—	Interrupt-on-change input.
	VBAT	AN	—	RTCC Back-up Battery.
RA6/ANA6/IOCA6/SEG6/CLKOUT	RA6	TTL/ST	CMOS/OD	General purpose I/O.
	ANA6	AN	—	ADC Channel input.
	IOCA6	—	—	Interrupt-on-change input.
	SEG6	—	AN	LCD Analog output.
	CLKOUT	TTL/ST	—	FOSC/4 digital output.
RA7/ANA7/SEG7/CLKIN	RA7	TTL/ST	CMOS/OD	General purpose I/O.
	ANA7	AN	—	ADC Channel input.
	SEG7	—	AN	LCD Analog output.
	CLKIN	ST	—	External Clock driver input.
RB0/CWG1IN(1)/C2IN1+/IOCB0/ANB0/SEG8/ZCD	RB0	TTL/ST	CMOS/OD	General purpose I/O.
	CWG1IN(1)	TTL/ST	—	Complementary Waveform Generator input
	C2IN1+	AN	—	Comparator positive input.
	IOCB0	TTL/ST	—	Interrupt-on-change input.
	ANB0	AN	—	ADC Channel input.
	SEG8	—	AN	LCD Analog output.
	ZCD	—	—	Zero-cross detect input pin (with constant current sink/source).
RB1/C1IN3-/C2IN3-/IOCB1/SCL(3,4)/SCK(1)/ANB1/HIB1/SEG9	RB1	TTL/ST	CMOS/OD	General purpose I/O.
	C1IN3-	AN	—	Comparator negative input.
	C2IN3-	AN	—	Comparator negative input.
	IOCB1	TTL/ST	—	Interrupt-on-change input.
	SCL(3,4)	I^2C	OD	MSSP I^2Cclock input/output.
	SCK(1)	TTL/ST	—	MSSP SPI clock input/output.
	ANB1	AN	—	ADC Channel input.
	HIB1	TTL/ST	—	High current output.
	SEG9	—	AN	LCD Analog output.
RB2/IOCB2/SDA(3,4)/SDI(1)/ANB2/SEG10/SEGCFLY1	RB2	TTL/ST	CMOS/OD	General purpose I/O.
	IOCB2	TTL/ST	—	Interrupt-on-change input.
	SDA(3,4)	I^2C	OD	MSSP I^2C data input/output.
	SDI(1)	TTL/ST	—	MSSP SPI serial data in.
	ANB2	AN	—	ADC Channel input.
	SEG10	—	AN	LCD Analog output.
	SEGCFLY1	AN	—	LCD Drive Charge Pump Capacitor Inputs

Legend: AN = Analog input or output; CMOS = CMOS compatible input or output; OD = Open-Drain; TTL = TTL compatible input‘; ST = Schmitt Trigger input with CMOS levels; I^2C = Schmitt Trigger input with I^2C; HV = High Voltage; XTAL = Crystal levels

Note 1: This is a PPS remappable input signal. The input function may be moved from the default location shown to one of several other PORTx pins. Refer to Table 14-2 for details on which PORT pins may be used for this signal.

2: All output signals shown in this row are PPS remappable. These signals may be mapped to output onto one of several PORTx pin options as described in Table 14-3.

3: This is a bidirectional signal. For normal module operation, the firmware should map this signal to the same pin in both the PPS input and PPS output registers.

4: These pins are configured for I^2C logic levels. The SCLx/SDAx signals may be assigned to any of the RB1/RB2/RC3/RC4 pins. PPS assignments to the other pins (e.g., RA5) will operate, but input logic levels will be standard TTL/ST, as selected by the INLVL register, instead of the I^2C specific or SMBus input buffer thresholds.

TABLE 1-3: PIC16(L)F19175/76 PINOUT DESCRIPTION (CONTINUED)

Name	Function	Input Type	Output Type	Description
RB3/C1IN2-/C2IN2-/IOCB3/ANB3/SEG11/SEGCFLY2	RB3	TTL/ST	CMOS/OD	General purpose I/O.
	C1IN2-	AN	—	Comparator negative input.
	C2IN2-	AN	—	Comparator negative input.
	IOCB3	TTL/ST	—	Interrupt-on-change input.
	ANB3	AN	—	ADC Channel input.
	SEG11	—	AN	LCD Analog output.
	SEGCFLY2	AN	—	LCD Drive Charge Pump Capacitor Inputs
RB4/ADCACT(1)/IOCB4/ANB4/COM0	RB4	TTL/ST	CMOS/OD	General purpose I/O.
	ADCACT(1)	TTL/ST	—	ADC Auto-Conversion Trigger input
	IOCB4	TTL/ST	—	Interrupt-on-change input.
	ANB4	AN	—	ADC Channel input.
	COM0	—	AN	LCD Driver Common Outputs.
RB5/T1G(1)/IOCB5/ANB5/SEG13/COM1	RB5	TTL/ST	CMOS/OD	General purpose I/O.
	T1G(1)	—	—	Timer1 Gate input.
	IOCB5	TTL/ST	—	Interrupt-on-change input.
	ANB5	AN	—	ADC Channel input.
	SEG13	-	AN	LCD Analog output.
	COM1	-	AN	LCD Driver Common Outputs.
RB6/CK2(3)/TX2(1)/CLCIN2(1)/IOCB6/ANB6/SEG14/ ICSPCLK	RB6	TTL/ST	CMOS/OD	General purpose I/O.
	CK2(3)	—	—	EUSART synchronous clock out
	TX2(1)	—	—	EUSART asynchronous TX data out
	CLCIN2(1)	—	—	Configurable Logic Cell source input.
	IOCB6	TTL/ST	—	Interrupt-on-change input.
	ANB6	AN	—	ADC Channel input.
	SEG14	—	AN	LCD Analog output.
	ICSPCLK	ST	—	In-Circuit Serial Programming™ and debugging clock input.
RB7/DK2(3)/RX2(1)/CLCIN3(1)/IOCB7/ANB7/SEG15/ DAC1OUT2/ICSPDAT	RB7	TTL/ST	CMOS/OD	General purpose I/O.
	DK2(3)	—	—	EUSART synchronous data output
	RX2(1)	—	—	EUSART receive input.
	CLCIN3(1)	—	—	Configurable Logic Cell source input.
	IOCB7	TTL/ST	—	Interrupt-on-change input.
	ANB7	—	AN	ADC Channel input.
	SEG15	—	AN	LCD Analog output.
	DAC1OUT2	—	AN	Digital-to-Analog Converter output.
	ICSPDAT	TTL/ST	TTL/ST	In-Circuit Serial Programming™ and debugging data input/output.

Legend: AN = Analog input or output; CMOS = CMOS compatible input or output; OD = Open-Drain; TTL = TTL compatible input‘; ST = Schmitt Trigger input with CMOS levels; I^2C = Schmitt Trigger input with I^2C; HV = High Voltage; XTAL = Crystal levels

Note 1: This is a PPS remappable input signal. The input function may be moved from the default location shown to one of several other PORTx pins. Refer to Table 14-2 for details on which PORT pins may be used for this signal.

2: All output signals shown in this row are PPS remappable. These signals may be mapped to output onto one of several PORTx pin options as described in Table 14-3.

3: This is a bidirectional signal. For normal module operation, the firmware should map this signal to the same pin in both the PPS input and PPS output registers.

4: These pins are configured for I^2C logic levels. The SCLx/SDAx signals may be assigned to any of the RB1/RB2/RC3/RC4 pins. PPS assignments to the other pins (e.g., RA5) will operate, but input logic levels will be standard TTL/ST, as selected by the INLVL register, instead of the I^2C specific or SMBus input buffer thresholds.

TABLE 1-3: PIC16(L)F19175/76 PINOUT DESCRIPTION (CONTINUED)

Name	Function	Input Type	Output Type	Description
RC0/T1CKI(1)/SMTWIN1(1)/IOCC0/SOSCO	RC0	TTL/ST	CMOS/OD	General purpose I/O.
	T1CKI(1)	—	—	Timer1 clock input.
	SMTWIN1(1)	—	—	SMT window input.
	IOCC0	TTL/ST	—	Interrupt-on-change input.
	SOSCO	—	AN	32.768 kHz secondary oscillator crystal driver output.
RC1/T4IN(1)/SMTSIG1(1)/CCP2(1)/IOCC1/SOSCI	RC1	TTL/ST	CMOS/OD	General purpose I/O.
	T4IN(1)	—	—	Timer4 external input.
	SMTSIG1(1)	—	—	SMT signal input.
	CCP2(1)	—	—	CCP Capture Input.
	IOCC1	TTL/ST	—	Interrupt-on-change input.
	SOSCI	—	—	32.768 kHz secondary oscillator crystal driver input.
RC2/CCP1(1)/IOCC2/ANC2/SEG18/COM2	RC2	TTL/ST	CMOS/OD	General purpose I/O.
	CCP1(1)	—	—	CCP Capture Input.
	IOCC2	TTL/ST	—	Interrupt-on-change input.
	ANC2	AN	—	ADC Channel input.
	SEG18	—	AN	LCD Analog output.
	COM2	—	AN	LCD Driver Common Outputs.
RC3/T2IN(1)/SCL(3,4)/SCK(1)/SEG19	RC3	TTL/ST	CMOS/OD	General purpose I/O.
	T2IN(1)	—	—	Timer2 external input.
	SCL(3,4)	I^2C	OD	MSSP I^2C clock input/output.
	SCK(1)	TTL/ST	—	MSSP SPI clock input/output
	IOCC3	TTL/ST	—	Interrupt-on-change input.
	ANC3	AN	—	ADC Channel input.
	SEG19	—	AN	LCD Analog output.
RC4/SDA(3,4)/SDI(1)/IOCC4/ANC4/SEG20	RC4	TTL/ST	CMOS/OD	General purpose I/O.
	SDA(3,4)	TTL/ST	—	MSSP I^2C data input/output.
	SDI(1)	I^2C	OD	MSSP SPI serial data in.
	IOCC4	TTL/ST	—	Interrupt-on-change input.
	ANC4	AN	—	ADC Channel input.
	SEG20	—	AN	LCD Analog output.
RC6/CK1(3)/TX1(1)/IOCC6/ANC6/SEG22/VLCD2	RC6	TTL/ST	CMOS/OD	General purpose I/O.
	CK1(3)	—	—	EUSART synchronous clock out
	TX1(1)	—	—	EUSART asynchronous TX data out
	IOCC6	TTL/ST	—	Interrupt-on-change input.
	ANC6	AN	—	ADC Channel input.
	SEG22	—	AN	LCD Analog output.
	VLCD2	AN	—	LCD analog input

Legend: AN = Analog input or output; CMOS = CMOS compatible input or output; OD = Open-Drain; TTL = TTL compatible input‘; ST = Schmitt Trigger input with CMOS levels; I^2C = Schmitt Trigger input with I^2C; HV = High Voltage; XTAL = Crystal levels

Note 1: This is a PPS remappable input signal. The input function may be moved from the default location shown to one of several other PORTx pins. Refer to Table 14-2 for details on which PORT pins may be used for this signal.

2: All output signals shown in this row are PPS remappable. These signals may be mapped to output onto one of several PORTx pin options as described in Table 14-3.

3: This is a bidirectional signal. For normal module operation, the firmware should map this signal to the same pin in both the PPS input and PPS output registers.

4: These pins are configured for I^2C logic levels. The SCLx/SDAx signals may be assigned to any of the RB1/RB2/RC3/RC4 pins. PPS assignments to the other pins (e.g., RA5) will operate, but input logic levels will be standard TTL/ST, as selected by the INLVL register, instead of the I^2C specific or SMBus input buffer thresholds.

TABLE 1-3: PIC16(L)F19175/76 PINOUT DESCRIPTION (CONTINUED)

Name	Function	Input Type	Output Type	Description
RC7/DT1(3)/RX1(1)/IOCC7/ANC7/SEG23/VLCD1	RC7	TTL/ST	CMOS/OD	General purpose I/O.
	DT1(3)	—	—	EUSART synchronous data output
	RX1(1)	—	—	EUSART receive input.
	IOCC7	TTL/ST	—	Interrupt-on-change input.
	ANC7	AN	—	ADC Channel input.
	SEG23	—	AN	LCD Analog output.
	VLCD1	AN	—	LCD analog input
RD0/AND0/SEG24	RD0	TTL/ST	CMOS/OD	General purpose I/O.
	AND0	AN	—	ADC Channel input.
	SEG24	AN	—	LCD Analog output.
RD1/AND1/SEG25	RD1	TTL/ST	CMOS/OD	General purpose I/O.
	AND1	AN	—	ADC Channel input.
	SEG25	—	AN	LCD Analog output.
RD2/AND2/COM5	RD2	TTL/ST	CMOS/OD	General purpose I/O.
	AND2	AN	—	ADC Channel input.
	SEG26	—	AN	LCD Analog output.
	COM5	—	AN	LCD Driver Common Outputs.
RD3/AND3/SEG27/COM4	RD3	TTL/ST	CMOS/OD	General purpose I/O.
	AND3	AN	—	ADC Channel input.
	SEG27	—	AN	LCD Analog output.
	COM4	—	AN	LCD Driver Common Outputs.
RD4/AND4/SEG28	RD4	TTL/ST	CMOS/OD	General purpose I/O.
	AND4	AN	—	ADC Channel input.
	SEG28	—	AN	LCD Analog output.
RD5/AND5/SEG29	RD5	TTL/ST	CMOS/OD	General purpose I/O.
	AND5	AN	—	ADC Channel input.
	SEG29	AN	—	LCD Analog output.
RD6/AND6/SEG30	RD6	TTL/ST	CMOS/OD	General purpose I/O.
	AND6	AN	—	ADC Channel input.
	SEG30	—	AN	LCD Analog output.
RD7/AND7/SEG31	RD7	TTL/ST	CMOS/OD	General purpose I/O.
	AND7	AN	—	ADC Channel input.
	SEG31	AN	—	LCD Analog output.
RE0/ANE0/SEG32	RE0	TTL/ST	CMOS/OD	General purpose I/O.
	ANE0	AN	—	ADC Channel input.
	SEG32	—	AN	LCD Analog output.
RE1/ANE2/SEG33/COM6	RE1	TTL/ST	CMOS/OD	General purpose I/O.
	ANE2	AN	—	ADC Channel input.
	SEG33	—	AN	LCD analog input
	COM6	—	AN	LCD Driver Common Outputs.

Legend: AN = Analog input or output; CMOS = CMOS compatible input or output; OD = Open-Drain; TTL = TTL compatible input'; ST = Schmitt Trigger input with CMOS levels; I^2C = Schmitt Trigger input with I^2C; HV = High Voltage; XTAL = Crystal levels

Note 1: This is a PPS remappable input signal. The input function may be moved from the default location shown to one of several other PORTx pins. Refer to Table 14-2 for details on which PORT pins may be used for this signal.

2: All output signals shown in this row are PPS remappable. These signals may be mapped to output onto one of several PORTx pin options as described in Table 14-3.

3: This is a bidirectional signal. For normal module operation, the firmware should map this signal to the same pin in both the PPS input and PPS output registers.

4: These pins are configured for I^2C logic levels. The SCLx/SDAx signals may be assigned to any of the RB1/RB2/RC3/RC4 pins. PPS assignments to the other pins (e.g., RA5) will operate, but input logic levels will be standard TTL/ST, as selected by the INLVL register, instead of the I^2C specific or SMBus input buffer thresholds.

TABLE 1-3: PIC16(L)F19175/76 PINOUT DESCRIPTION (CONTINUED)

Name	Function	Input Type	Output Type	Description
RE2/ANE2/SEG34/COM7	RE2	TTL/ST	CMOS/OD	General purpose I/O.
	ANE2	AN	—	ADC Channel input.
	SEG34	—	AN	LCD analog input
	COM7	—	AN	LCD Driver Common Outputs.
RE3/IOCE3/$\overline{\text{MCLR}}$	RE3	TTL/ST	CMOS/OD	General purpose I/O.
	IOCE3	TTL/ST	—	Interrupt-on-change input.
	$\overline{\text{MCLR}}$	ST	—	Master clear input with internal weak pull up resistor.
VLCD3	VLCD3	AN		LCD analog input
V_{DD}	V_{DD}	Power	P	Positive supply voltage input.
V_{SS}	V_{DD}	Power	P	Ground reference.

Legend: AN = Analog input or output; CMOS = CMOS compatible input or output; OD = Open-Drain; TTL = TTL compatible input‘; ST = Schmitt Trigger input with CMOS levels; I^2C = Schmitt Trigger input with I^2C; HV = High Voltage; XTAL = Crystal levels

Note 1: This is a PPS remappable input signal. The input function may be moved from the default location shown to one of several other PORTx pins. Refer to Table 14-2 for details on which PORT pins may be used for this signal.

2: All output signals shown in this row are PPS remappable. These signals may be mapped to output onto one of several PORTx pin options as described in Table 14-3.

3: This is a bidirectional signal. For normal module operation, the firmware should map this signal to the same pin in both the PPS input and PPS output registers.

4: These pins are configured for I^2C logic levels. The SCLx/SDAx signals may be assigned to any of the RB1/RB2/RC3/RC4 pins. PPS assignments to the other pins (e.g., RA5) will operate, but input logic levels will be standard TTL/ST, as selected by the INLVL register, instead of the I^2C specific or SMBus input buffer thresholds.

TABLE 1-4: PIC16(L)F19185/86 PINOUT DESCRIPTION

Name	Function	Input Types	Output Types	Description
RA0/C1IN0-/C2IN0-/ANA0/CLCIN0(1)/IOCA0/SEG0	RA0	TTL/ST	CMOS/OD	General purpose I/O.
	C1IN0-	AN	—	Comparator negative input.
	C2IN0-	AN	—	Comparator negative input.
	ANA0	AN	—	ADC Channel input.
	CLCIN0(1)	—	—	Configurable Logic Cell source input.
	IOCA0	TTL/ST	—	Interrupt-on-change input.
	SEG0	-	AN	LCD Analog output.
RA1/C1IN1-/C2IN1-/ANA1/CLCIN1(1)/SEG1	RA1	TTL/ST	CMOS/OD	General purpose I/O.
	C1IN1-	AN	—	Comparator negative input.
	C2IN1-	AN	—	Comparator negative input.
	ANA1	AN	—	ADC Channel input.
	CLCIN1(1)	—	—	Configurable Logic Cell source input.
	IOCA1	TTL/ST	—	Interrupt-on-change input.
	SEG1	—	AN	LCD Analog output.
RA2/C1IN0+/C2IN0+/ANA2/DAC1OUT1/IOCA2/SEG2	RA2	TTL/ST	CMOS/OD	General purpose I/O.
	C1IN0+	AN	—	Comparator positive input.
	C2IN0+	AN	—	Comparator positive input.
	ANA2	AN	—	ADC Channel input.
	DAC1OUT1	—	AN	Digital-to-Analog Converter output.
	IOCA2	TTL/ST	—	Interrupt-on-change input.
	SEG2	—	AN	LCD Analog output.
RA3/C1IN1+/ANA3/SEG3/IOCA3/VREF+ (ADC)/VREF+ (DAC1)	RA3	TTL/ST	CMOS/OD	General purpose I/O.
	C1IN1+	AN	—	Comparator positive input.
	ANA3	AN	—	ADC Channel input.
	SEG3	—	AN	LCD Analog output.
	IOCA3	TTL/ST	—	Interrupt-on-change input.
	VREF+ (ADC)	AN	—	ADC positive reference.
	VREF+ (DAC1)	AN	—	DAC positive reference.
RA4/ANA4/T0CKI(1)/IOCA4/SEG4/COM3	RA4	TTL/ST	CMOS/OD	General purpose I/O.
	ANA4	AN	—	ADC Channel input.
	T0CKI(1)	—	—	Timer0 clock input.
	IOCA4	TTL/ST	—	Interrupt-on-change input.
	SEG4	—	AN	LCD Analog output.
	COM3	—	AN	LCD Driver Common Outputs.
RA5/SS(1)/IOCA5/VBAT	RA5	TTL/ST	CMOS/OD	General purpose I/O.
	SS(1)	TTL/ST	—	MSSP SPI slave select input.
	IOCA5	TTL/ST	—	Interrupt-on-change input.
	VBAT	AN	—	RTCC Back-up Battery.

Legend: AN = Analog input or output; CMOS = CMOS compatible input or output; OD = Open-Drain; TTL = TTL compatible input‘; ST = Schmitt Trigger input with CMOS levels; I^2C = Schmitt Trigger input with I^2C; HV = High Voltage; XTAL = Crystal levels

Note 1: This is a PPS remappable input signal. The input function may be moved from the default location shown to one of several other PORTx pins. Refer to Table 14-2 for details on which PORT pins may be used for this signal.

2: All output signals shown in this row are PPS remappable. These signals may be mapped to output onto one of several PORTx pin options as described in Table 14-3.

3: This is a bidirectional signal. For normal module operation, the firmware should map this signal to the same pin in both the PPS input and PPS output registers.

4: These pins are configured for I^2C logic levels. The SCLx/SDAx signals may be assigned to any of the RB1/RB2/RC3/RC4 pins. PPS assignments to the other pins (e.g., RA5) will operate, but input logic levels will be standard TTL/ST, as selected by the INLVL register, instead of the I^2C specific or SMBus input buffer thresholds.

TABLE 1-4: PIC16(L)F19185/86 PINOUT DESCRIPTION (CONTINUED)

Name	Function	Input Types	Output Types	Description
RA6/ANA6/IOCA6/SEG6/CLKOUT	RA6	TTL/ST	CMOS/OD	General purpose I/O.
	ANA6	AN	—	ADC Channel input.
	IOCA6	—	—	Interrupt-on-change input.
	SEG6	—	AN	LCD Analog output.
	CLKOUT	TTL/ST	—	FOSC/4 digital output.
RA7/ANA7/SEG7/CLKIN	RA7	TTL/ST	CMOS/OD	General purpose I/O.
	ANA7	AN	—	ADC Channel input.
	SEG7	—	AN	LCD Analog output.
	CLKIN	ST	—	External Clock driver input.
RB0/CWG1IN(1)/C2IN1+/IOCB0/ANB0/SEG8/ZCD	RB0	TTL/ST	CMOS/OD	General purpose I/O.
	CWG1IN(1)	TTL/ST	—	Complementary Waveform Generator input
	C2IN1+	AN	—	Comparator positive input.
	IOCB0	TTL/ST	—	Interrupt-on-change input.
	ANB0	AN	—	ADC Channel input.
	SEG8	—	AN	LCD Analog output.
	ZCD	—	—	Zero-cross detect input pin (with constant current sink/source).
RB1/C1IN3-/C2IN3-/IOCB1/SCL(3,4)/SCK(1)/ANB1/HIB1/SEG9	RB1	TTL/ST	CMOS/OD	General purpose I/O.
	C1IN3-	AN	—	Comparator negative input.
	C2IN3-	AN	—	Comparator negative input.
	IOCB1	TTL/ST	—	Interrupt-on-change input.
	SCL(3,4)	I^2C	OD	MSSP I^2C clock input/output.
	SCK(1)	TTL/ST	—	MSSP SPI clock input/output.
	ANB1	AN	—	ADC Channel input.
	HIB1	TTL/ST	—	High current output.
	SEG9	—	AN	LCD Analog output.
RB2/IOCB2/SDA(3,4)/SDI(1)/ANB2/SEG10/SEGCFLY1	RB2	TTL/ST	CMOS/OD	General purpose I/O.
	IOCB2	TTL/ST	—	Interrupt-on-change input.
	SDA(3,4)	I^2C	OD	MSSP I^2C data input/output.
	SDI(1)	TTL/ST	—	MSSP SPI serial data in.
	ANB2	AN	—	ADC Channel input.
	SEG10	—	AN	LCD Analog output.
	SEGCFLY1	AN	—	LCD Drive Charge Pump Capacitor Inputs

Legend: AN = Analog input or output; CMOS = CMOS compatible input or output; OD = Open-Drain; TTL = TTL compatible input'; ST = Schmitt Trigger input with CMOS levels; I^2C = Schmitt Trigger input with I^2C; HV = High Voltage; XTAL = Crystal levels

Note 1: This is a PPS remappable input signal. The input function may be moved from the default location shown to one of several other PORTx pins. Refer to Table 14-2 for details on which PORT pins may be used for this signal.

2: All output signals shown in this row are PPS remappable. These signals may be mapped to output onto one of several PORTx pin options as described in Table 14-3.

3: This is a bidirectional signal. For normal module operation, the firmware should map this signal to the same pin in both the PPS input and PPS output registers.

4: These pins are configured for I^2C logic levels. The SCLx/SDAx signals may be assigned to any of the RB1/RB2/RC3/RC4 pins. PPS assignments to the other pins (e.g., RA5) will operate, but input logic levels will be standard TTL/ST, as selected by the INLVL register, instead of the I^2C specific or SMBus input buffer thresholds.

TABLE 1-4: PIC16(L)F19185/86 PINOUT DESCRIPTION (CONTINUED)

Name	Function	Input Types	Output Types	Description
RB3/C1IN2-/C2IN2-/IOCB3/ANB3/SEG11/SEGCFLY2	RB3	TTL/ST	CMOS/OD	General purpose I/O.
	C1IN2-	AN	—	Comparator negative input.
	C2IN2-	AN	—	Comparator negative input.
	IOCB3	TTL/ST	—	Interrupt-on-change input.
	ANB3	AN	—	ADC Channel input.
	SEG11	—	AN	LCD Analog output.
	SEGCFLY2	AN	—	LCD Drive Charge Pump Capacitor Inputs
RB4/ADCACT(1)/IOCB4/ANB4/COM0	RB4	TTL/ST	CMOS/OD	General purpose I/O.
	ADCACT(1)	TTL/ST	—	ADC Auto-Conversion Trigger input
	IOCB4	TTL/ST	—	Interrupt-on-change input.
	ANB4	AN	—	ADC Channel input.
	COM0	—	AN	LCD Driver Common Outputs.
RB5/T1G(1)/IOCB5/ANB5/SEG13/COM1	RB5	TTL/ST	CMOS/OD	General purpose I/O.
	T1G(1)	—	—	Timer1 Gate input.
	IOCB5	TTL/ST	—	Interrupt-on-change input.
	ANB5	AN	—	ADC Channel input.
	SEG13	—	AN	LCD Analog output.
	COM1	—	AN	LCD Driver Common Outputs.
RB6/CK2(3)/TX2(1)/CLCIN2(1)/IOCB6/ANB6/SEG14/ICSPCLK	RB6	TTL/ST	CMOS/OD	General purpose I/O.
	CK2(3)	—	—	EUSART synchronous clock out
	TX2(1)	—	—	EUSART asynchronous TX data out
	CLCIN2(1)	—	—	Configurable Logic Cell source input.
	IOCB6	TTL/ST	—	Interrupt-on-change input.
	ANB6	AN	—	ADC Channel input.
	SEG14	—	AN	LCD Analog output.
	ICSPCLK	ST	—	In-Circuit Serial Programming™ and debugging clock input.
RB7/DK2(3)/RX2(1)/CLCIN3(1)/IOCB7/ANB7/SEG15/DAC1OUT2/ICSPDAT	RB7	TTL/ST	CMOS/OD	General purpose I/O.
	DK2(3)	—	—	EUSART synchronous data output
	RX2(1)	—	—	EUSART receive input.
	CLCIN3(1)	—	—	Configurable Logic Cell source input.
	IOCB7	TTL/ST	—	Interrupt-on-change input.
	ANB7	—	AN	ADC Channel input.
	SEG15	—	AN	LCD Analog output.
	DAC1OUT2	—	AN	Digital-to-Analog Converter output.
	ICSPDAT	TTL/ST	TTL/ST	In-Circuit Serial Programming™ and debugging data input/output.

Legend: AN = Analog input or output; CMOS = CMOS compatible input or output; OD = Open-Drain; TTL = TTL compatible input‘; ST = Schmitt Trigger input with CMOS levels; I^2C = Schmitt Trigger input with I^2C; HV = High Voltage; XTAL = Crystal levels

Note 1: This is a PPS remappable input signal. The input function may be moved from the default location shown to one of several other PORTx pins. Refer to Table 14-2 for details on which PORT pins may be used for this signal.

2: All output signals shown in this row are PPS remappable. These signals may be mapped to output onto one of several PORTx pin options as described in Table 14-3.

3: This is a bidirectional signal. For normal module operation, the firmware should map this signal to the same pin in both the PPS input and PPS output registers.

4: These pins are configured for I^2C logic levels. The SCLx/SDAx signals may be assigned to any of the RB1/RB2/RC3/RC4 pins. PPS assignments to the other pins (e.g., RA5) will operate, but input logic levels will be standard TTL/ST, as selected by the INLVL register, instead of the I^2C specific or SMBus input buffer thresholds.

TABLE 1-4: PIC16(L)F19185/86 PINOUT DESCRIPTION (CONTINUED)

Name	Function	Input Types	Output Types	Description
RC0/T1CKI(1)/SMTWIN1(1)/IOCC0/SOSCO	RC0	TTL/ST	CMOS/OD	General purpose I/O.
	T1CKI(1)	—	—	Timer1 clock input.
	SMTWIN1(1)	—	—	SMT window input.
	IOCC0	TTL/ST	—	Interrupt-on-change input.
	SOSCO	—	AN	32.768 kHz secondary oscillator crystal driver output.
RC1/T4IN(1)/SMTSIG1(1)/CCP2(1)/IOCC1/SOSCI	RC1	TTL/ST	CMOS/OD	General purpose I/O.
	T4IN(1)	—	—	Timer4 external input.
	SMTSIG1(1)	—	—	SMT signal input.
	CCP2(1)	—	—	CCP Capture Input.
	IOCC1	TTL/ST	—	Interrupt-on-change input.
	SOSCI	—	—	32.768 kHz secondary oscillator crystal driver input.
RC2/CCP1(1)/IOCC2/ANC2/SEG18/COM2	RC2	TTL/ST	CMOS/OD	General purpose I/O.
	CCP1(1)	—	—	CCP Capture Input.
	IOCC2	TTL/ST	—	Interrupt-on-change input.
	ANC2	AN	—	ADC Channel input.
	SEG18	—	AN	LCD Analog output.
	COM2	—	AN	LCD Driver Common Outputs.
RC3/T2IN(1)/SCL(3,4)/SCK(1)/SEG19	RC3	TTL/ST	CMOS/OD	General purpose I/O.
	T2IN(1)	—	—	Timer2 external input.
	SCL(3,4)	I^2C	OD	MSSP I^2C clock input/output.
	SCK(1)	TTL/ST	—	MSSP SPI clock input/output
	IOCC3	TTL/ST	—	Interrupt-on-change input.
	ANC3	AN	—	ADC Channel input.
	SEG19	—	AN	LCD Analog output.
RC4/SDA(3,4)/SDI(1)/IOCC4/ANC4/SEG20	RC4	TTL/ST	CMOS/OD	General purpose I/O.
	SDA(3,4)	TTL/ST	—	MSSP I^2C data input/output.
	SDI(1)	I^2C	OD	MSSP SPI serial data in.
	IOCC4	TTL/ST	—	Interrupt-on-change input.
	ANC4	AN	—	ADC Channel input.
	SEG20	—	AN	LCD Analog output.

Legend: AN = Analog input or output; CMOS = CMOS compatible input or output; OD = Open-Drain; TTL = TTL compatible input‘; ST = Schmitt Trigger input with CMOS levels; I^2C = Schmitt Trigger input with I^2C; HV = High Voltage; XTAL = Crystal levels

Note 1: This is a PPS remappable input signal. The input function may be moved from the default location shown to one of several other PORTx pins. Refer to Table 14-2 for details on which PORT pins may be used for this signal.

2: All output signals shown in this row are PPS remappable. These signals may be mapped to output onto one of several PORTx pin options as described in Table 14-3.

3: This is a bidirectional signal. For normal module operation, the firmware should map this signal to the same pin in both the PPS input and PPS output registers.

4: These pins are configured for I^2C logic levels. The SCLx/SDAx signals may be assigned to any of the RB1/RB2/RC3/RC4 pins. PPS assignments to the other pins (e.g., RA5) will operate, but input logic levels will be standard TTL/ST, as selected by the INLVL register, instead of the I^2C specific or SMBus input buffer thresholds.

TABLE 1-4: PIC16(L)F19185/86 PINOUT DESCRIPTION (CONTINUED)

Name	Function	Input Types	Output Types	Description
RC6/CK1(3)/TX1(1)/IOCC6/ANC6/SEG22/VLCD2	RC6	TTL/ST	CMOS/OD	General purpose I/O.
	CK1(3)	—	—	EUSART synchronous clock out
	TX1(1)	—	—	EUSART asynchronous TX data out
	IOCC6	TTL/ST	—	Interrupt-on-change input.
	ANC6	AN	—	ADC Channel input.
	SEG22	—	AN	LCD Analog output.
	VLCD2	AN	—	LCD analog input
RC7/DT1(3)/RX1(1)/IOCC7/ANC7/SEG23/VLCD1	RC7	TTL/ST	CMOS/OD	General purpose I/O.
	DT1(3)	—	—	EUSART synchronous data output
	RX1(1)	—	—	EUSART receive input.
	IOCC7	TTL/ST	—	Interrupt-on-change input.
	ANC7	AN	—	ADC Channel input.
	SEG23	—	AN	LCD Analog output.
	VLCD1	AN	—	LCD analog input
RD0/AND0/SEG24	RD0	TTL/ST	CMOS/OD	General purpose I/O.
	AND0	AN	—	ADC Channel input.
	SEG24	AN	—	LCD Analog output.
RD1/AND1/SEG25	RD1	TTL/ST	CMOS/OD	General purpose I/O.
	AND1	AN	—	ADC Channel input.
	SEG25	—	AN	LCD Analog output.
RD2/AND2/COM5	RD2	TTL/ST	CMOS/OD	General purpose I/O.
	AND2	AN	—	ADC Channel input.
	SEG26	—	AN	LCD Analog output.
	COM5	—	AN	LCD Driver Common Outputs.
RD3/AND3/SEG27/COM4	RD3	TTL/ST	CMOS/OD	General purpose I/O.
	AND3	AN	—	ADC Channel input.
	SEG27	—	AN	LCD Analog output.
	COM4	—	AN	LCD Driver Common Outputs.
RD4/AND4/SEG28	RD4	TTL/ST	CMOS/OD	General purpose I/O.
	AND4	AN	—	ADC Channel input.
	SEG28	—	AN	LCD Analog output.
RD5/AND5/SEG29	RD5	TTL/ST	CMOS/OD	General purpose I/O.
	AND5	AN	—	ADC Channel input.
	SEG29	AN	—	LCD Analog output.
RD6/AND6/SEG30	RD6	TTL/ST	CMOS/OD	General purpose I/O.
	AND6	AN	—	ADC Channel input.
	SEG30	—	AN	LCD Analog output.

Legend: AN = Analog input or output; CMOS = CMOS compatible input or output; OD = Open-Drain; TTL = TTL compatible input‘; ST = Schmitt Trigger input with CMOS levels; I^2C = Schmitt Trigger input with I^2C; HV = High Voltage; XTAL = Crystal levels

Note 1: This is a PPS remappable input signal. The input function may be moved from the default location shown to one of several other PORTx pins. Refer to Table 14-2 for details on which PORT pins may be used for this signal.

2: All output signals shown in this row are PPS remappable. These signals may be mapped to output onto one of several PORTx pin options as described in Table 14-3.

3: This is a bidirectional signal. For normal module operation, the firmware should map this signal to the same pin in both the PPS input and PPS output registers.

4: These pins are configured for I^2C logic levels. The SCLx/SDAx signals may be assigned to any of the RB1/RB2/RC3/RC4 pins. PPS assignments to the other pins (e.g., RA5) will operate, but input logic levels will be standard TTL/ST, as selected by the INLVL register, instead of the I^2C specific or SMBus input buffer thresholds.

TABLE 1-4: PIC16(L)F19185/86 PINOUT DESCRIPTION (CONTINUED)

Name	Function	Input Types	Output Types	Description
RD7/AND7/SEG31	RD7	TTL/ST	CMOS/OD	General purpose I/O.
	AND7	AN	—	ADC Channel input.
	SEG31	AN	—	LCD Analog output.
RE0/ANE0/SEG32	RE0	TTL/ST	CMOS/OD	General purpose I/O.
	ANE0	AN	—	ADC Channel input.
	SEG32	—	AN	LCD Analog output.
RE1/ANE2/SEG33/COM6	RE1	TTL/ST	CMOS/OD	General purpose I/O.
	ANE2	AN	—	ADC Channel input.
	SEG33	—	AN	LCD analog input
	COM6	—	AN	LCD Driver Common Outputs.
RE2/ANE2/SEG34/COM7	RE2	TTL/ST	CMOS/OD	General purpose I/O.
	ANE2	AN	—	ADC Channel input.
	SEG34	—	AN	LCD analog input
	COM7	—	AN	LCD Driver Common Outputs.
RE3/IOCE3/MCLR	RE3	TTL/ST	CMOS/OD	General purpose I/O.
	IOCE3	TTL/ST	—	Interrupt-on-change input.
	MCLR	ST	—	Master clear input with internal weak pull up resistor.
RF0/ANF0/SEG40	RF0	TTL/ST	CMOS/OD	General purpose I/O.
	ANF0	AN	—	ADC Channel input.
	SEG40	—	AN	LCD Analog output.
RF1/ANF1/SEG41	RF1	TTL/ST	CMOS/OD	General purpose I/O.
	ANF1	AN	—	ADC Channel input.
	SEG41	—	AN	LCD Analog output.
RF2/ANF2/SEG42	RF2	TTL/ST	CMOS/OD	General purpose I/O.
	ANF2	AN	—	ADC Channel input.
	SEG42	—	AN	LCD Analog output.
RF3/ANF3/SEG43	RF3	TTL/ST	CMOS/OD	General purpose I/O.
	ANF3	AN	—	ADC Channel input.
	SEG43	—	AN	LCD Analog output.
RF4/ANF4/SEG44	RF4	TTL/ST	CMOS/OD	General purpose I/O.
	ANF4	AN	—	ADC Channel input.
	SEG44	—	AN	LCD Analog output.
RF5/ANF5/SEG45	RF5	TTL/ST	CMOS/OD	General purpose I/O.
	ANF5	AN	—	ADC Channel input.
	SEG45	—	AN	LCD Analog output.
RF6/ANF6/SEG46	RF6	TTL/ST	CMOS/OD	General purpose I/O.
	ANF6	AN	—	ADC Channel input.
	SEG46	—	AN	LCD Analog output.

Legend: AN = Analog input or output; CMOS = CMOS compatible input or output; OD = Open-Drain; TTL = TTL compatible input‘; ST = Schmitt Trigger input with CMOS levels; I^2C = Schmitt Trigger input with I^2C; HV = High Voltage; XTAL = Crystal levels

Note 1: This is a PPS remappable input signal. The input function may be moved from the default location shown to one of several other PORTx pins. Refer to Table 14-2 for details on which PORT pins may be used for this signal.

2: All output signals shown in this row are PPS remappable. These signals may be mapped to output onto one of several PORTx pin options as described in Table 14-3.

3: This is a bidirectional signal. For normal module operation, the firmware should map this signal to the same pin in both the PPS input and PPS output registers.

4: These pins are configured for I^2C logic levels. The SCLx/SDAx signals may be assigned to any of the RB1/RB2/RC3/RC4 pins. PPS assignments to the other pins (e.g., RA5) will operate, but input logic levels will be standard TTL/ST, as selected by the INLVL register, instead of the I^2C specific or SMBus input buffer thresholds.

TABLE 1-4: PIC16(L)F19185/86 PINOUT DESCRIPTION (CONTINUED)

Name	Function	Input Types	Output Types	Description
RF7/ANF7/SEG47	RF7	TTL/ST	CMOS/OD	General purpose I/O.
	ANF7	AN	—	ADC Channel input.
	SEG47	—	AN	LCD Analog output.
VLCD3	VLCD3	AN	—	LCD analog input
VDD	VDD	Power	P	Positive supply voltage input.
VSS	VDD	Power	P	Ground reference.

Legend: AN = Analog input or output; CMOS = CMOS compatible input or output; OD = Open-Drain; TTL = TTL compatible input'; ST = Schmitt Trigger input with CMOS levels; I^2C = Schmitt Trigger input with I^2C; HV = High Voltage; XTAL = Crystal levels

Note 1: This is a PPS remappable input signal. The input function may be moved from the default location shown to one of several other PORTx pins. Refer to Table 14-2 for details on which PORT pins may be used for this signal.

2: All output signals shown in this row are PPS remappable. These signals may be mapped to output onto one of several PORTx pin options as described in Table 14-3.

3: This is a bidirectional signal. For normal module operation, the firmware should map this signal to the same pin in both the PPS input and PPS output registers.

4: These pins are configured for I^2C logic levels. The SCLx/SDAx signals may be assigned to any of the RB1/RB2/RC3/RC4 pins. PPS assignments to the other pins (e.g., RA5) will operate, but input logic levels will be standard TTL/ST, as selected by the INLVL register, instead of the I^2C specific or SMBus input buffer thresholds.

2.0 GUIDELINES FOR GETTING STARTED WITH PIC16(L)F19155/56/75/76/85/86 MICROCONTROLLERS

2.1 Basic Connection Requirements

Getting started with the PIC16(L)F19155/56/75/76/85/86 family of 8-bit microcontrollers requires attention to a minimal set of device pin connections before proceeding with development.

The following pins must always be connected:

- All VDD and VSS pins
  (see **Section 2.2 "Power Supply Pins"**)
- $\overline{\text{MCLR}}$ pin (when configured for external operation)
  (see **Section 2.3 "Master Clear (MCLR) Pin"**)

These pins must also be connected if they are being used in the end application:

- ICSPCLK/ICSPDAT pins used for In-Circuit Serial Programming™ (ICSP™) and debugging purposes (see **Section 2.4 "ICSP™ Pins"**)
- OSC1, OSC2, SOSCO and SOSCI pins when an external oscillator source is used
  (see **Section 2.5 "External Oscillator Pins"**)

Additionally, the following pins may be required:

- VREF+ pins are used when external voltage reference for analog modules is implemented

The minimum mandatory connections are shown in Figure 2-1.

FIGURE 2-1: RECOMMENDED MINIMUM CONNECTIONS

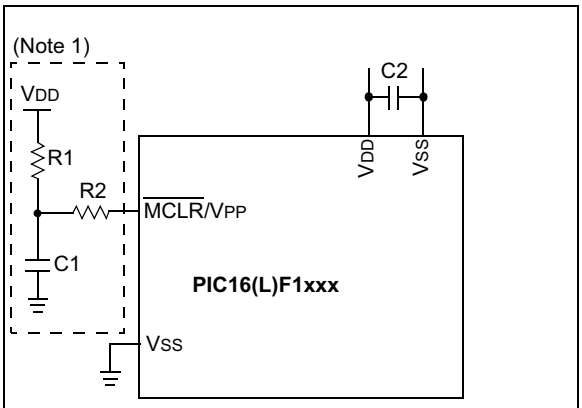

Key (all values are recommendations):
C1: 10 nF, 16V ceramic
C2: 0.1 µF, 16V ceramic
R1: 10 kΩ
R2: 100Ω to 470Ω

Note1: Only when MCLRE configuration bit is 1 and the $\overline{\text{MCLR}}$ pin does not have a weak pull-up.

2.2 Power Supply Pins

2.2.1 DECOUPLING CAPACITORS

The use of decoupling capacitors on every pair of power supply pins (VDD and VSS) is required. All VDD and VSS pins must be connected. None can be left floating.

Consider the following criteria when using decoupling capacitors:

- **Value and type of capacitor:** A 0.1 µF (100 nF), 10-25V capacitor is recommended. The capacitor should be a low-ESR device, with a resonance frequency in the range of 200 MHz and higher. Ceramic capacitors are recommended.
- **Placement on the printed circuit board:** The decoupling capacitors should be placed as close to the pins as possible. It is recommended to place the capacitors on the same side of the board as the device. If space is constricted, the capacitor can be placed on another layer on the PCB using a via; however, ensure that the trace length from the pin to the capacitor is no greater than 0.25 inch (6 mm).
- **Handling high-frequency noise:** If the board is experiencing high-frequency noise (upward of tens of MHz), add a second ceramic type capacitor in parallel to the above described decoupling capacitor. The value of the second capacitor can be in the range of 0.01 µF to 0.001 µF. Place this second capacitor next to each primary decoupling capacitor. In high-speed circuit designs, consider implementing a decade pair of capacitances as close to the power and ground pins as possible (e.g., 0.1 µF in parallel with 0.001 µF).
- **Maximizing performance:** On the board layout from the power supply circuit, run the power and return traces to the decoupling capacitors first, and then to the device pins. This ensures that the decoupling capacitors are first in the power chain. Equally important is to keep the trace length between the capacitor and the power pins to a minimum, thereby reducing PCB trace inductance.

2.2.2 TANK CAPACITORS

On boards with power traces running longer than six inches in length, it is suggested to use a tank capacitor for integrated circuits, including microcontrollers, to supply a local power source. The value of the tank capacitor should be determined based on the trace resistance that connects the power supply source to the device, and the maximum current drawn by the device in the application. In other words, select the tank capacitor so that it meets the acceptable voltage sag at the device. Typical values range from 4.7 µF to 47 µF.

2.3 Master Clear ($\overline{\text{MCLR}}$) Pin

The $\overline{\text{MCLR}}$ pin provides three specific device functions:

- Device Reset (when MCLRE = 1)
- Digital input pin (when MCLRE = 0)
- Device Programming and Debugging

If programming and debugging are not required in the end application then either set the MCLRE Configuration bit to '1' and use the pin as a digital input or clear the MCLRE Configuration bit and leave the pin open to use the internal weak pull-up. The addition of other components, to help increase the application's resistance to spurious Resets from voltage sags, may be beneficial. A typical configuration is shown in Figure 2-1. Other circuit designs may be implemented, depending on the application's requirements.

During programming and debugging, the resistance and capacitance that can be added to the pin must be considered. Device programmers and debuggers drive the $\overline{\text{MCLR}}$ pin. Consequently, specific voltage levels (V_{IH} and V_{IL}) and fast signal transitions must not be adversely affected. Therefore, the programmer $\overline{\text{MCLR}}$/V_{PP} output should be connected directly to the pin so that R1 isolates the capacitor, C1 from the $\overline{\text{MCLR}}$ pin during programming and debugging operations.

Any components associated with the $\overline{\text{MCLR}}$ pin should be placed within 0.25 inch (6 mm) of the pin.

2.4 ICSP™ Pins

The ICSPCLK and ICSPDAT pins are used for In-Circuit Serial Programming™ (ICSP™) and debugging purposes. It is recommended to keep the trace length between the ICSP connector and the ICSP pins on the device as short as possible. If the ICSP connector is expected to experience an ESD event, a series resistor is recommended, with the value in the range of a few tens of ohms, not to exceed 100Ω.

Pull-up resistors, series diodes and capacitors on the ICSPCLK and ICSPDAT pins are not recommended as they will interfere with the programmer/debugger communications to the device. If such discrete components are an application requirement, they should be isolated from the programmer by resistors between the application and the device pins or removed from the circuit during programming. Alternatively, refer to the AC/DC characteristics and timing requirements information in the respective device Flash programming specification for information on capacitive loading limits, and pin input voltage high (VIH) and input low (VIL) requirements.

For device emulation, ensure that the "Communication Channel Select" (i.e., ICSPCLK/ICSPDAT pins), programmed into the device, matches the physical connections for the ICSP to the Microchip debugger/emulator tool.

For more information on available Microchip development tools connection requirements, refer to **Section 41.0 "Development Support"**.

2.5 External Oscillator Pins

Many microcontrollers have options for at least two oscillators: a high-frequency primary oscillator and a low-frequency secondary oscillator (refer to **Section 9.0 "Oscillator Module (with Fail-Safe Clock Monitor)"** for details).

The oscillator circuit should be placed on the same side of the board as the device. Place the oscillator circuit close to the respective oscillator pins with no more than 0.5 inch (12 mm) between the circuit components and the pins. The load capacitors should be placed next to the oscillator itself, on the same side of the board.

Use a grounded copper pour around the oscillator circuit to isolate it from surrounding circuits. The grounded copper pour should be routed directly to the MCU ground. Do not run any signal traces or power traces inside the ground pour. Also, if using a two-sided board, avoid any traces on the other side of the board where the crystal is placed.

Layout suggestions are shown in Figure 2-2. In-line packages may be handled with a single-sided layout that completely encompasses the oscillator pins. With fine-pitch packages, it is not always possible to completely surround the pins and components. A suitable solution is to tie the broken guard sections to a mirrored ground layer. In all cases, the guard trace(s) must be returned to ground.

In planning the application's routing and I/O assignments, ensure that adjacent port pins, and other signals in close proximity to the oscillator, are benign (i.e., free of high frequencies, short rise and fall times, and other similar noise).

For additional information and design guidance on oscillator circuits, please refer to these Microchip Application Notes, available at the corporate website (www.microchip.com):

- AN826, *"Crystal Oscillator Basics and Crystal Selection for rfPIC™ and PICmicro® Devices"*
- AN849, *"Basic PICmicro® Oscillator Design"*
- AN943, *"Practical PICmicro® Oscillator Analysis and Design"*
- AN949, *"Making Your Oscillator Work"*

2.6 Unused I/Os

Unused I/O pins should be configured as outputs and driven to a logic low state. Alternatively, connect a 1 kΩ to 10 kΩ resistor to VSS on unused pins and drive the output logic low.

FIGURE 2-2: SUGGESTED PLACEMENT OF THE OSCILLATOR CIRCUIT

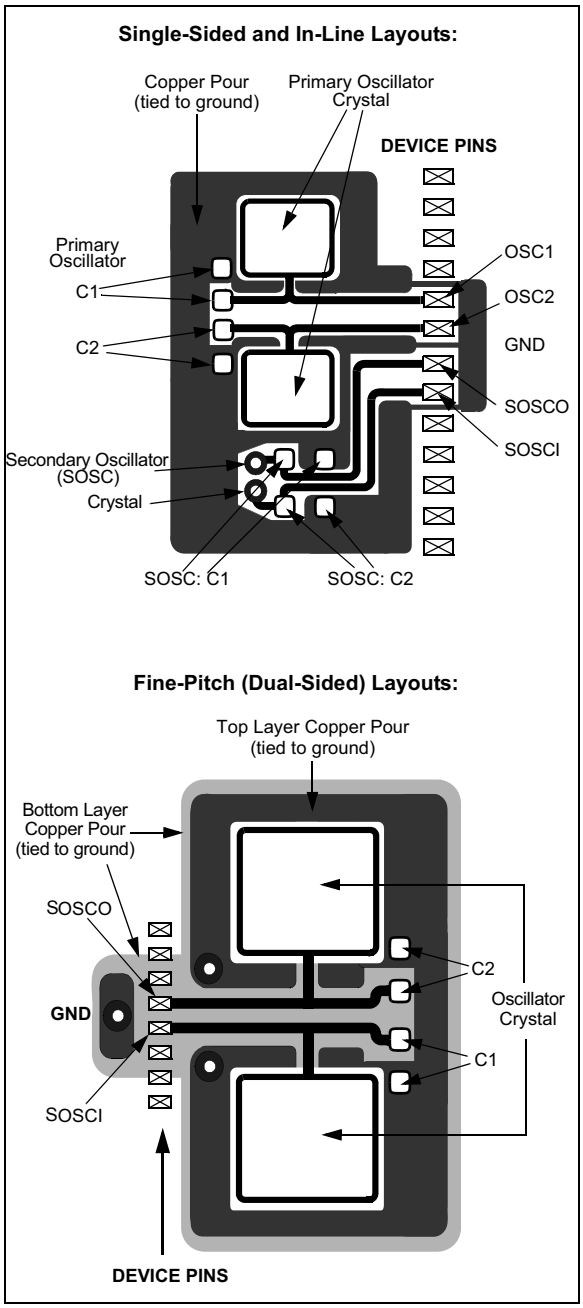

3.0 ENHANCED MID-RANGE CPU

This family of devices contains an enhanced mid-range 8-bit CPU core. The CPU has 48 instructions. Interrupt capability includes automatic context saving.

The hardware stack is 16-levels deep and has Overflow and Underflow Reset capability. Direct, Indirect, and Relative Addressing modes are available. Two File Select Registers (FSRs) provide the ability to read program and data memory.

FIGURE 3-1: CORE DATA PATH DIAGRAM

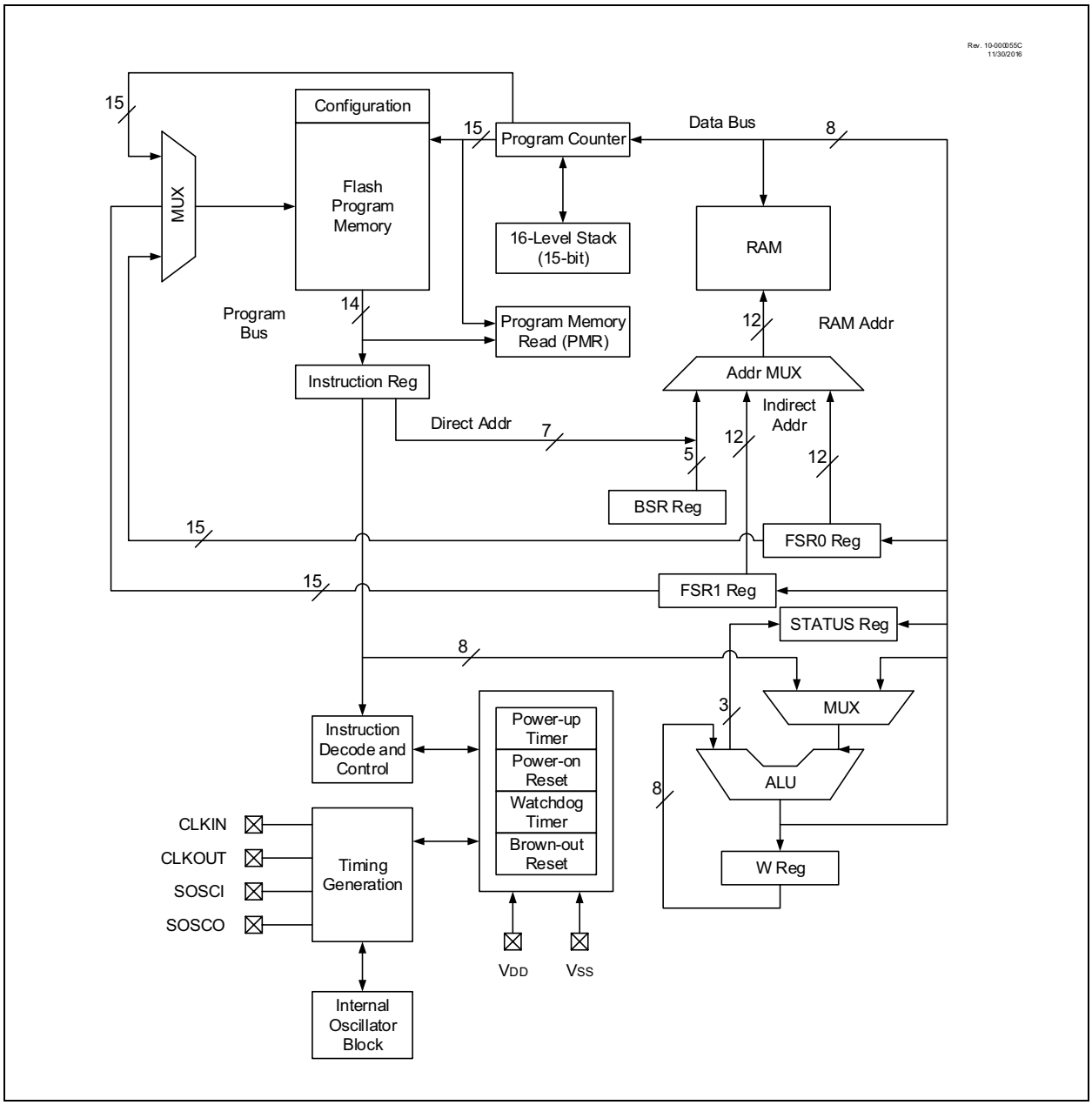

3.1 Automatic Interrupt Context Saving

During interrupts, certain registers are automatically saved in shadow registers and restored when returning from the interrupt. This saves stack space and user code. See **Section 10.5 "Automatic Context Saving"** for more information.

3.2 16-Level Stack with Overflow and Underflow

These devices have a hardware stack memory 15 bits wide and 16 words deep. A Stack Overflow or Underflow will set the appropriate bit (STKOVF or STKUNF) in the PCON register, and if enabled, will cause a software Reset. See **Section 4.5 "Stack"** for more details.

3.3 File Select Registers

There are two 16-bit File Select Registers (FSR). FSRs can access all file registers, program memory, and data EEPROM, which allows one Data Pointer for all memory. When an FSR points to program memory, there is one additional instruction cycle in instructions using INDF to allow the data to be fetched. General purpose memory can also be addressed linearly, providing the ability to access contiguous data larger than 80 bytes. See **Section 4.6 "Indirect Addressing"** for more details.

3.4 Instruction Set

There are 48 instructions for the enhanced mid-range CPU to support the features of the CPU. See **Section 37.0 "Instruction Set Summary"** for more details.

4.0 MEMORY ORGANIZATION

These devices contain the following types of memory:

- Program Memory
  - Configuration Words
  - Device ID
  - User ID
  - Program Flash Memory
  - Device Information Area (DIA)
  - Device Configuration Information (DCI)
  - Revision ID
- Data Memory
  - Core Registers
  - Special Function Registers
  - General Purpose RAM (GPR)
  - Common RAM
- Data EEPROM

The following features are associated with access and control of program memory and data memory:

- PCL and PCLATH
- Stack
- Indirect Addressing
- NVMREG access

4.1 Program Memory Organization

The enhanced mid-range core has a 15-bit program counter capable of addressing 32K x 14 program memory space. Table 4-1 shows the memory sizes implemented. The Reset vector is at 0000h and the interrupt vector is at 0004h (see Figure 4-1).

TABLE 4-1: DEVICE SIZES AND ADDRESSES

Device	Program Flash Memory Size (Words)	Last Program Memory Address
PIC16(L)F19155	8k	1FFFh
PIC16(L)F19175	8k	1FFFh
PIC16(L)F19185	8k	1FFFh
PIC16(L)F19156	16k	3FFFh
PIC16(L)F19176	16k	3FFFh
PIC16(L)F19186	16k	3FFFh

© 2017-2019 Microchip Technology Inc.

FIGURE 4-1: PROGRAM MEMORY MAP AND STACK FOR PIC16(L)F19155/56/75/76/85/86

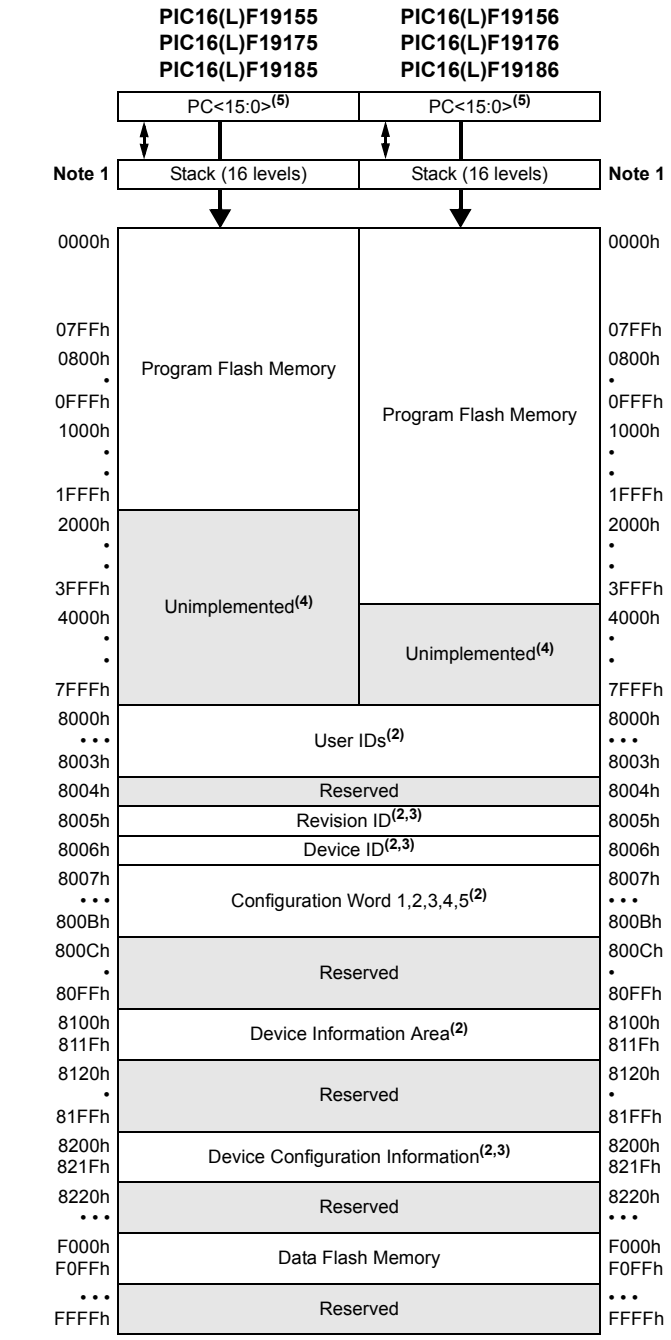

Note 1: The stack is a separate SRAM panel, apart from all user memory panels.

2: Not code-protected.

3: Device Configuration Information, Device/Revision IDs are hard-coded in silicon.

4: The addresses do not roll over. The region is read as '0'.

5: For the purposes of instruction fetching during program execution, only 15 bits (PC<14:0>) are used. However, for the purposes of nonvolatile memory reading and writing through ICSP™ programming operations, the PC uses all 16 bits (PC<15:0>), and the "Load PC Address" command requires a full 16-bit data payload.

4.1.1 READING PROGRAM MEMORY AS DATA

There are three methods of accessing constants in program memory. The first method is to use tables of `RETLW` instructions. The second method is to set an FSR to point to the program memory. The third method is to use the NVMREG interface to access the program memory. Refer to **Section 13.4 "NVMREG Access"**.

4.1.1.1 `RETLW` Instruction

The `RETLW` instruction can be used to provide access to tables of constants. The recommended way to create such a table is shown in Example 4-1.

EXAMPLE 4-1: `RETLW` INSTRUCTION

```
constants
    BRW                 ;Add Index in W to
                        ;program counter to
                        ;select data
    RETLW DATA0         ;Index0 data
    RETLW DATA1         ;Index1 data
    RETLW DATA2
    RETLW DATA3


my_function
    ;… LOTS OF CODE…
    MOVLW       DATA_INDEX
    call constants
    ;… THE CONSTANT IS IN W
```

The `BRW` instruction makes this type of table very simple to implement.

4.1.1.2 Indirect Read with FSR

The program memory can be accessed as data by setting bit 7 of an FSRxH register and reading the matching INDFx register. The `MOVIW` instruction will place the lower eight bits of the addressed word in the W register. Writes to the program memory cannot be performed via the INDF registers. Instructions that read the program memory via the FSR require one extra instruction cycle to complete. Example 4-2 demonstrates reading the program memory via an FSR.

The HIGH directive will set bit 7 if a label points to a location in the program memory. This applies to the assembly code Example 4-2 shown below.

EXAMPLE 4-2: ACCESSING PROGRAM MEMORY VIA FSR

```
constants
    RETLW DATA0         ;Index0 data
    RETLW DATA1         ;Index1 data
    RETLW DATA2
    RETLW DATA3
my_function
    ;… LOTS OF CODE…
    MOVLW   LOW constants
    MOVWF   FSR1L
    MOVLW   HIGH constants
    MOVWF   FSR1H
    MOVIW   0[FSR1]
;THE PROGRAM MEMORY IS IN W
```

4.2 Memory Access Partition (MAP)

User Flash is partitioned into:
- Application Block
- Boot Block, and
- Storage Area Flash (SAF) Block

The user can allocate the memory usage by setting the $\overline{\text{BBEN}}$ bit, selecting the size of the partition defined by BBSIZE<2:0> bits and enabling the Storage Area Flash by the $\overline{\text{SAFEN}}$ bit of the Configuration Word (see Register 5-4). Refer to Table 4-2 for the different user Flash memory partitions.

4.2.1 APPLICATION BLOCK

Default settings of the Configuration bits ($\overline{\text{BBEN}}$ = 1 and $\overline{\text{SAFEN}}$ = 1) assign all memory in the user Flash area to the Application Block.

4.2.2 BOOT BLOCK

If $\overline{\text{BBEN}}$ = 1, the Boot Block is enabled and a specific address range is alloted as the Boot Block based on the value of the BBSIZE bits of Configuration Word (Register 5-4) and the sizes provided in Table 5-1.

4.2.3 STORAGE AREA FLASH

Storage Area Flash (SAF) is enabled by clearing the $\overline{\text{SAFEN}}$ bit of the Configuration Word in Register 5-4. If enabled, the SAF block is placed at the end of memory and spans 128 words. If the Storage Area Flash (SAF) is enabled, the SAF area is not available for program execution.

4.2.4 MEMORY WRITE PROTECTION

All the memory blocks have corresponding write protection fuses WRTAPP and WRTB bits in the Configuration Word (Register 5-4). If write-protected locations are written from NVMCON registers, memory is not changed and the WRERR bit defined in Register 12-5 is set as explained in **Section 13.4.9 "WRERR Bit"**.

4.2.5 MEMORY VIOLATION

A Memory Execution Violation Reset occurs while executing an instruction that has been fetched from outside a valid execution area, clearing the $\overline{\text{MEMV}}$ bit. Refer to **Section 8.13 "Memory Execution Violation"** for the available valid program execution areas and the PCON1 register definition (Register 8-3) for $\overline{\text{MEMV}}$ bit conditions.

TABLE 4-2: MEMORY ACCESS PARTITION

REG	Address	Partition			
		$\overline{\text{BBEN}}$ = 1 SAFEN = 1	$\overline{\text{BBEN}}$ = 1 SAFEN = 0	$\overline{\text{BBEN}}$ = 0 SAFEN = 1	$\overline{\text{BBEN}}$ = 0 SAFEN = 0
PFM	00 0000h • • • Last Boot Block Memory Address	APPLICATION BLOCK (**Note 4**)	APPLICATION BLOCK (**Note 4**)	BOOT BLOCK (**Note 4**)	BOOT BLOCK (**Note 4**)
	Last Boot Block Memory Address + 1(1) • • • Last Program Memory Address - 80h			APPLICATION BLOCK (**Note 4**)	APPLICATION BLOCK (**Note 4**)
	Last Program Memory Address - 7Fh(2) • • • Last Program Memory Address		SAF (**Note 4**)		SAF (**Note 4**)
CONF IG	Config Memory Address(3)	CONFIG (**Note 4**)			

Note 1: Last Boot Block Memory Address is based on BBSIZE[2:0] given in Table 5-1.
2: Last Program Memory Address is the Flash size given in Table 4-1.
3: Config Memory Address are the address locations of the Configuration Words given in Table 13-2.
4: Each memory block has a corresponding write protection fuse defined by the $\overline{\text{WRTAPP}}$, $\overline{\text{WRTB}}$ and $\overline{\text{WRTSAF}}$ bits in the Configuration Word (Register 5-4).

4.3 Data Memory Organization

The data memory is partitioned into 64 memory banks with 128 bytes in each bank. Each bank consists of (**Section 4.3.6 "Device Memory Maps"**):

FIGURE 4-2: BANKED MEMORY PARTITIONING

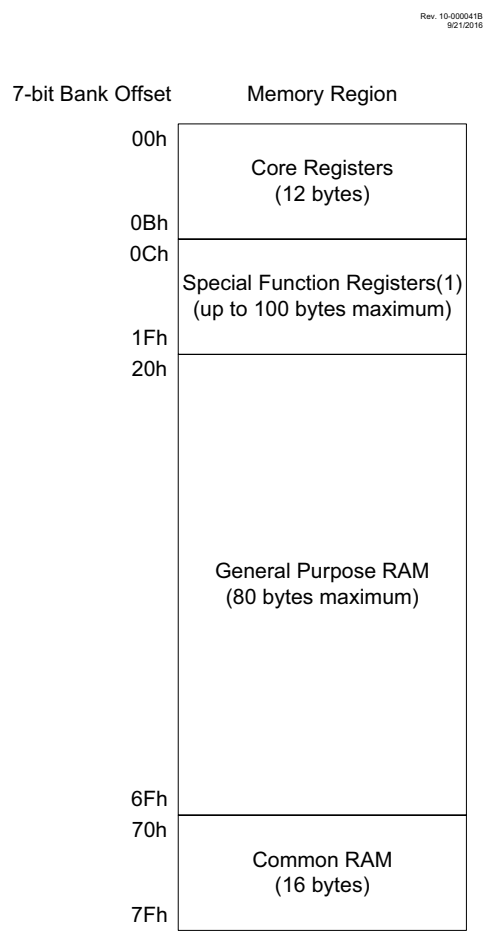

Note 1: This table shows the address for an example bank with 20 bytes of SFRs only.

- 12 core registers
- Up to 100 Special Function Registers (SFR)
- Up to 80 bytes of General Purpose RAM (GPR)
- 16 bytes of common RAM

4.3.1 BANK SELECTION

The active bank is selected by writing the bank number into the Bank Select Register (BSR). Unimplemented memory will read as '0'. All data memory can be accessed either directly (via instructions that use the file registers) or indirectly via the two File Select Registers (FSR). See **Section 4.6 "Indirect Addressing"** for more information.

Data memory uses a 12-bit address. The upper five bits of the address define the Bank address and the lower seven bits select the registers/RAM in that bank.

4.3.2 CORE REGISTERS

The core registers contain the registers that directly affect the basic operation. The core registers occupy the first 12 addresses of every data memory bank (addresses x00h/x08h through x0Bh/x8Bh). These registers are listed below in Table 4-3. For detailed information, see Table 4-3.

TABLE 4-3: CORE REGISTERS

Addresses	BANKx
x00h or x80h	INDF0
x01h or x81h	INDF1
x02h or x82h	PCL
x03h or x83h	STATUS
x04h or x84h	FSR0L
x05h or x85h	FSR0H
x06h or x86h	FSR1L
x07h or x87h	FSR1H
x08h or x88h	BSR
x09h or x89h	WREG
x0Ah or x8Ah	PCLATH
x0Bh or x8Bh	INTCON

4.3.2.1 STATUS Register

The STATUS register, shown in Register 4-1, contains:

- the arithmetic status of the ALU
- the Reset status

The STATUS register can be the destination for any instruction, like any other register. If the STATUS register is the destination for an instruction that affects the Z, DC or C bits, then the write to these three bits is disabled. These bits are set or cleared according to the device logic. Furthermore, the $\overline{TO}$ and $\overline{PD}$ bits are not writable. Therefore, the result of an instruction with the STATUS register as destination may be different than intended.

For example, `CLRF STATUS` will clear the upper three bits and set the Z bit. This leaves the STATUS register as '`000u u1uu`' (where `u` = unchanged).

It is recommended, therefore, that only `BCF`, `BSF`, `SWAPF` and `MOVWF` instructions are used to alter the STATUS register, because these instructions do not affect any Status bits. For other instructions not affecting any Status bits (refer to **Section 37.0 "Instruction Set Summary"**).

> **Note 1:** The C and DC bits operate as $\overline{\text{Borrow}}$ and $\overline{\text{Digit Borrow}}$ out bits, respectively, in subtraction.

REGISTER 4-1: STATUS: STATUS REGISTER

U-0	U-0	U-0	R-1/q	R-1/q	R/W-0/u	R/W-0/u	R/W-0/u
—	—	—	$\overline{TO}$	$\overline{PD}$	Z	DC(1)	C(1)
bit 7							bit 0

Legend:		
R = Readable bit	W = Writable bit	U = Unimplemented bit, read as '0'
u = Bit is unchanged	x = Bit is unknown	-n/n = Value at POR and BOR/Value at all other Resets
'1' = Bit is set	'0' = Bit is cleared	q = Value depends on condition

bit 7-5 **Unimplemented:** Read as '`0`'

bit 4 **$\overline{TO}$:** Time-Out bit
`1` = After power-up, `CLRWDT` instruction or `SLEEP` instruction
`0` = A WDT time-out occurred

bit 3 **$\overline{PD}$:** Power-Down bit
`1` = After power-up or by the `CLRWDT` instruction
`0` = By execution of the `SLEEP` instruction

bit 2 **Z:** Zero bit
`1` = The result of an arithmetic or logic operation is zero
`0` = The result of an arithmetic or logic operation is not zero

bit 1 **DC:** Digit Carry/$\overline{\text{Digit Borrow}}$ bit (`ADDWF`, `ADDLW`, `SUBLW`, `SUBWF` instructions)(1)
`1` = A carry-out from the 4th low-order bit of the result occurred
`0` = No carry-out from the 4th low-order bit of the result

bit 0 **C:** Carry/$\overline{\text{Borrow}}$ bit(1) (`ADDWF`, `ADDLW`, `SUBLW`, `SUBWF` instructions)(1)
`1` = A carry-out from the Most Significant bit of the result occurred
`0` = No carry-out from the Most Significant bit of the result occurred

Note 1: For $\overline{\text{Borrow}}$, the polarity is reversed. A subtraction is executed by adding the two's complement of the second operand. For rotate (`RRF`, `RLF`) instructions, this bit is loaded with either the high-order or low-order bit of the source register.

4.3.3 SPECIAL FUNCTION REGISTER

The Special Function Registers are registers used by the application to control the desired operation of peripheral functions in the device. The Special Function Registers occupy the 20 bytes of the data banks 0-59 and 100 bytes of the data banks 60-63, after the core registers.

The SFRs associated with the operation of the peripherals are described in the appropriate peripheral chapter of this data sheet.

4.3.4 GENERAL PURPOSE RAM

There are up to 80 bytes of GPR in each data memory bank.

TABLE 4-4: GENERAL PURPOSE RAM SIZE AND BANK LOCATION

Bank	PIC16(L)F19155, PIC16(L)F19175, PIC16(L)F19185		PIC16(L)F19156, PIC16(L)F19176, PIC16(L)F19186	
	Address	Size (Bytes)	Address	Size (Bytes)
0	020h-07Fh	96	020h-07Fh	96
1	0A0h-0EFh	80	0A0h-0EFh	80
2	120h-16Fh	80	120h-16Fh	80
3	1A0h-1EFh	80	1A0h-1EFh	80
4	220h-26Fh	80	220h-26Fh	80
5	2A0h-2EFh	80	2A0h-2EFh	80
6	320h-36Fh	80	320h-36Fh	80
7	3A0h-3EFh	80	3A0h-EFh	80
8	420h-46Fh	80	420h-46Fh	80
9	4A0h-4EFh	80	4A0h-4EFh	80
10	520h-560h	80	520h-560h	80
11	5A0h-5EFh	80	5A0h-5EFh	80
12	620h-64Fh	48	620h-64Fh	80
13			6A0h-6EFh	80
14			720h-76Fh	80
15			7A0h-7EFh	80
16			820h-96Fh	80
17			8A0h-8EFh	80
18			920h-96Fh	80
19			9A0h-9EFh	80
20			A20h-A6Fh	80
21			AA0h-AEFh	80
22			B20h-B6Fh	80
23			BA0h-BEFh	80
24			C20h-C6Fh	80
25			CA0h-CBFh	32

Legend: = Unimplemented GPR locations

TABLE 4-5: GENERAL PURPOSE RAM SIZE AND BANK LOCATION

Device	General Purpose RAM Size (Bytes)
PIC16(L)F19155	1024
PIC16(L)F19175	1024
PIC16(L)F19185	1024
PIC16(L)F19156	2048
PIC16(L)F19176	2048
PIC16(L)F19186	2048

4.3.4.1 Linear Access to GPR

The general purpose RAM can be accessed in a non-banked method via the FSRs. This can simplify access to large memory structures. See **Section 4.6.2 "Linear Data Memory"** for more information.

4.3.5 COMMON RAM

There are 16 bytes of common RAM accessible from all banks.

4.3.6 DEVICE MEMORY MAPS

The memory maps are as shown in Table 4-6 through Table 4-12.

TABLE 4-6: PIC16(L)F19155/56/75/76/85/86 MEMORY MAP, BANKS 0-7

	BANK 0		BANK 1		BANK 2		BANK 3		BANK 4		BANK 5		BANK 6		BANK 7
000h	Core Registers (Table 4-3)	080h	Core Registers (Table 4-3)	100h	Core Registers (Table 4-3)	180h	Core Registers (Table 4-3)	200h	Core Registers (Table 4-3)	280h	Core Registers (Table 4-3)	300h	Core Registers (Table 4-3)	380h	Core Registers (Table 4-3)
00Bh		08Bh		10Bh		18Bh		20Bh		28Bh		30Bh		38Bh	
00Ch	PORTA	08Ch	ADLTHL	10Ch	ADACQL	18Ch	SSP1BUF	20Ch	TMR1L	28Ch	T2TMR	30Ch	CCPR1L	38Ch	—
00Dh	PORTB	08Dh	ADLTHH	10Dh	ADACQH	18Dh	SSP1ADD	20Dh	TMR1H	28Dh	T2PR	30Dh	CCPR1H	38Dh	—
00Eh	PORTC	08Eh	ADUTHL	10Eh	ADCAP	18Eh	SSP1MSK	20Eh	T1CON	28Eh	T2CON	30Eh	CCP1CON	38Eh	—
00Fh	PORTD(2)	08Fh	ADUTHH	10Fh	ADPREL	18Fh	SSP1STAT	20Fh	T1GCON	28Fh	T2HLT	30Fh	CCP1CAP	38Fh	—
010h	PORTE	090h	ADERRL	110h	ADPREH	190h	SSP1CON1	210h	T1GATE	290h	T2CLKCON	310h	CCPR2L	390h	—
011h	PORTF(3)	091h	ADERRH	111h	ADCON0	191h	SSP1CON2	211h	T1CLK	291h	T2RST	311h	CCPR2H	391h	—
012h	TRISA	092h	ADSTPTL	112h	ADCON1	192h	SSP1CON3	212h	—	292h	T4TMR	312h	CCP2CON	392h	—
013h	TRISB	093h	ADSTPTH	113h	ADCON2	193h	—	213h	—	293h	T4PR	313h	CCP2CAP	393h	—
014h	TRISC	094h	ADFLTRL	114h	ADCON3	194h	—	214h	—	294h	T4CON	314h	PWM3DCL	394h	—
015h	TRISD(2)	095h	ADFLTRH	115h	ADSTAT	195h	—	215h	—	295h	T4HLT	315h	PWM3DCH	395h	—
016h	TRISE(2)	096h	ADACCL	116h	ADREF	196h	—	216h	—	296h	T4CLKCON	316h	PWM3CON	396h	—
017h	TRISF(3)	097h	ADACCH	117h	ADACT	197h	—	217h	—	297h	T4RST	317h	—	397h	—
018h	LATA	098h	ADACCU	118h	ADCLK	198h	—	218h	—	298h	—	318h	PWM4DCL	398h	—
019h	LATB	099h	ADCNT	119h	RC1REG	199h	—	219h	—	299h	—	319h	PWM4DCH	399h	—
01Ah	LATC	09Ah	ADRPT	11Ah	TX1REG	19Ah	—	21Ah	—	29Ah	—	31Ah	PWM4CON	39Ah	—
01Bh	LATD(2)	09Bh	ADPREVL	11Bh	SP1BRGL	19Bh	—	21Bh	—	29Bh	—	31Bh	—	39Bh	—
01Ch	LATE(2)	09Ch	ADPREVH	11Ch	SP1BRGH	19Ch	—	21Ch	—	29Ch	—	31Ch	—	39Ch	—
01Dh	LATF(3)	09Dh	ADRESL	11Dh	RC1STA	19Dh	—	21Dh	—	29Dh	—	31Dh	—	39Dh	—
01Eh	—	09Eh	ADRESH	11Eh	TX1STA	19Eh	—	21Eh	CCPTMRS0	29Eh	—	31Eh	—	39Eh	—
01Fh	—	09Fh	—	11Fh	BAUD1CON	19Fh	—	21Fh	—	29Fh	—	31Fh	—	39Fh	—
020h	General Purpose Register 96 Bytes	0A0h	General Purpose Register 80 Bytes	120h	General Purpose Register 80 Bytes	1A0h	General Purpose Register 80 Bytes	220h	General Purpose Register 80 Bytes	2A0h	General Purpose Register 80 Bytes	320h	General Purpose Register 80 Bytes	3A0h	General Purpose Register 80 Bytes
		0EFh		16Fh		1EFh		26Fh		2EFh		36Fh		3EFh	
		0F0h	Accesses 70h – 7Fh	170h	Accesses 70h – 7Fh	1F0h	Accesses 70h – 7Fh	270h	Accesses 70h – 7Fh	2F0h	Accesses 70h – 7Fh	370h	Accesses 70h – 7Fh	3F0h	Accesses 70h – 7Fh
07Fh		0FFh		17Fh		1FFh		27Fh		2FFh		37Fh		3FFh	

Note 1: Unimplemented locations read as '0'.
2: Present only on PIC16(L)F19175/76/85/86.
3: Present only on PIC16(L)F19185/86.

© 2017-2019 Microchip Technology Inc.

TABLE 4-7: PIC16(L)F19155/56/75/76/85/86 MEMORY MAP, BANKS 8-15

	BANK 8		BANK 9		BANK 10		BANK 11		BANK 12		BANK 13		BANK 14		BANK 15
400h	Core Registers (Table 4-3)	480h	Core Registers (Table 4-3)	500h	Core Registers (Table 4-3)	580h	Core Registers (Table 4-3)	600h	Core Registers (Table 4-3)	680h	Core Registers (Table 4-3)	700h	Core Registers (Table 4-3)	780h	Core Registers (Table 4-3)
40Ch	—	48Ch	SMT1TMRL	50Ch	—	58Ch	—	60Ch	CWG1CLKCON	68Ch	—	70Ch	PIR0	78Ch	—
40Dh	—	48Dh	SMT1TMRH	50Dh	—	58Dh	—	60Dh	CWG1ISM	68Dh	—	70Dh	PIR1	78Dh	—
40Eh	—	48Eh	SMT1TMRU	50Eh	—	58Eh	—	60Eh	CWG1DBR	68Eh	—	70Eh	PIR2	78Eh	—
40Fh	—	48Fh	SMT1CPRL	50Fh	—	58Fh	—	60Fh	CWG1DBF	68Fh	—	70Fh	PIR3	78Fh	—
410h	—	490h	SMT1CPRH	510h	—	590h	—	610h	CWG1CON0	690h	—	710h	PIR4	790h	—
411h	—	491h	SMT1CPRU	511h	—	591h	—	611h	CWG1CON1	691h	—	711h	PIR5	791h	—
412h	—	492h	SMT1CPWL	512h	—	592h	—	612h	CWG1AS0	692h	—	712h	PIR6	792h	—
413h	—	493h	SMT1CPWH	513h	—	593h	—	613h	CWG1AS1	693h	—	713h	PIR7	793h	—
414h	—	494h	SMT1CPWU	514h	—	594h	—	614h	CWG1STR	694h	—	714h	PIR8	794h	—
415h	—	495h	SMT1PRL	515h	—	595h	—	615h	—	695h	—	715h	—	795h	—
416h	—	496h	SMT1PRH	516h	—	596h	—	616h	—	696h	—	716h	PIE0	796h	PMD0
417h	—	497h	SMT1PRU	517h	—	597h	—	617h	—	697h	—	717h	PIE1	797h	PMD1
418h	—	498h	SMT1CON0	518h	—	598h	—	618h	—	698h	—	718h	PIE2	798h	PMD2
419h	—	499h	SMT1CON1	519h	—	599h	—	619h	—	699h	—	719h	PIE3	799h	PMD3
41Ah	—	49Ah	SMT1STAT	51Ah	—	59Ah	—	61Ah	—	69Ah	—	71Ah	PIE4	79Ah	PMD4
41Bh	—	49Bh	SMT1CLK	51Bh	—	59Bh	—	61Bh	—	69Bh	—	71Bh	PIE5	79Bh	PMD5
41Ch	—	49Ch	SMT1SIG	51Ch	—	59Ch	TMR0L	61Ch	—	69Ch	—	71Ch	PIE6	79Ch	—
41Dh	—	49Dh	SMT1WIN	51Dh	—	59Dh	TMR0H	61Dh	—	69Dh	—	71Dh	PIE7	79Dh	—
41Eh	—	49Eh	—	51Eh	—	59Eh	T0CON0	61Eh	—	69Eh	—	71Eh	PIE8	79Eh	—
41Fh	—	49Fh	—	51Fh	—	59Fh	T0CON1	61Fh	—	69Fh	—	71Fh	—	79Fh	—
420h 46Fh	General Purpose Register 80 Bytes	4A0h 4EFh	General Purpose Register 80 Bytes	520h 56Fh	General Purpose Register 80 Bytes	5A0h 5EFh	General Purpose Register 80 Bytes	620h 64Fh	General Purpose Register 48 Bytes	6A0h 6EFh	General Purpose Register 80 Bytes(2)	720h 76Fh	General Purpose Register 80 Bytes(2)	7A0h 7EFh	General Purpose Register 80 Bytes(2)
								650h 66Fh	General Purpose Register 32 Bytes(2)						
470h 47Fh	Common RAM Accesses 470h-47Fh	4F0h 4FFh	Common RAM Accesses 4F0h-4FFh	570h 57Fh	Common RAM Accesses 570h-57Fh	5F0h 5FFh	Common RAM Accesses 5F0h-5FFh	670h 67Fh	Common RAM Accesses 670h-67Fh	6F0h 6FFh	Common RAM Accesses 6F0h-6FFh	770h 77Fh	Common RAM Accesses 770h-77Fh	7F0h 7FFh	Common RAM Accesses 7F0h-7FFh

Note 1: Unimplemented locations read as '0'.
2: Present only on PIC16(L)F19156/76/86.

© 2017-2019 Microchip Technology Inc.

TABLE 4-8: PIC16(L)F19155/56/75/76/85/86 MEMORY MAP, BANKS 16-23

	BANK 16		BANK 17		BANK 18		BANK 19		BANK 20		BANK 21		BANK 22		BANK 23
800h	Core Registers (Table 4-3)	880h	Core Registers (Table 4-3)	900h	Core Registers (Table 4-3)	980h	Core Registers (Table 4-3)	A00h	Core Registers (Table 4-3)	A80h	Core Registers (Table 4-3)	B00h	Core Registers (Table 4-3)	B80h	Core Registers (Table 4-3)
80Ch	WDTCON0	88Ch	CPUDOZE	90Ch	FVRCON	98Ch	—	A0Ch	—	A8Ch	—	B0Ch	—	B8Ch	—
80Dh	WDTCON1	88Dh	OSCCON1	90Dh	—	98Dh	—	A0Dh	—	A8Dh	—	B0Dh	—	B8Dh	—
80Eh	WDTPSL	88Eh	OSCCON2	90Eh	DAC1CON0	98Eh	—	A0Eh	—	A8Eh	—	B0Eh	—	B8Eh	—
80Fh	WDTPSH	88Fh	OSCCON3	90Fh	DAC1CON1	98Fh	CMOUT	A0Fh	—	A8Fh	—	B0Fh	—	B8Fh	—
810h	WDTTMR	890h	OSCSTAT	910h	—	990h	CM1CON0	A10h	—	A90h	—	B10h	—	B90h	—
811h	BORCON	891h	OSCEN	911h	—	991h	CM1CON1	A11h	—	A91h	—	B11h	—	B91h	—
812h	VREGCON	892h	OSCTUNE	912h	—	992h	CM1NSEL	A12h	—	A92h	—	B12h	—	B92h	—
813h	PCON0	893h	OSCFRQ	913h	—	993h	CM1PSEL	A13h	—	A93h	—	B13h	—	B93h	—
814h	PCON1	894h	ACTCON	914h	—	994h	CM2CON0	A14h	—	A94h	—	B14h	—	B94h	—
815h	—	895h	—	915h	—	995h	CM2CON1	A15h	—	A95h	—	B15h	—	B95h	—
816h	—	896h	—	916h	—	996h	CM2NSEL	A16h	—	A96h	—	B16h	—	B96h	—
817h	—	897h	—	917h	—	997h	CM2PSEL	A17h	—	A97h	—	B17h	—	B97h	—
818h	—	898h	—	918h	—	998h	—	A18h	—	A98h	—	B18h	—	B98h	—
819h	—	899h	—	919h	—	999h	—	A19h	RC2REG	A99h	—	B19h	—	B99h	—
81Ah	NVMADRL	89Ah	—	91Ah	—	99Ah	—	A1Ah	TX2REG	A9Ah	—	B1Ah	—	B9Ah	—
81Bh	NVMADRH	89Bh	—	91Bh	—	99Bh	—	A1Bh	SP2BRGL	A9Bh	—	B1Bh	—	B9Bh	—
81Ch	NVMDATL	89Ch	—	91Ch	—	99Ch	—	A1Ch	SP2BRGH	A9Ch	—	B1Ch	—	B9Ch	—
81Dh	NVMDATH	89Dh	—	91Dh	—	99Dh	—	A1Dh	RC2STA	A9Dh	—	B1Dh	—	B9Dh	—
81Eh	NVMCON1	89Eh	—	91Eh	—	99Eh	—	A1Eh	TX2STA	A9Eh	—	B1Eh	—	B9Eh	—
81Fh	NVMCON2	89Fh	—	91Fh	ZCDCON	99Fh	—	A1Fh	BAUD2CON	A9Fh	—	B1Fh	—	B9Fh	—
820h 86Fh	General Purpose Register 80 Bytes(2)	8A0h 8EFh	General Purpose Register 80 Bytes(2)	920h 96Fh	General Purpose Register 80 Bytes(2)	9A0h 9EFh	General Purpose Register 80 Bytes(2)	A20h A6Fh	General Purpose Register 80 Bytes(2)	AA0h AEFh	General Purpose Register 80 Bytes(2)	B20h B6Fh	General Purpose Register 80 Bytes(2)	BA0h BEFh	General Purpose Register 80 Bytes(2)
870h 87Fh	Common RAM Accesses 70h-7Fh	8F0h 8FFh	Common RAM Accesses 70h-7Fh	970h 97Fh	Common RAM Accesses 70h-7Fh	9F0h 9FFh	Common RAM Accesses 70h-7Fh	A70h A7Fh	Common RAM Accesses 70h-7Fh	AF0h AFFh	Common RAM Accesses 70h-7Fh	B70h B7Fh	Common RAM Accesses 70h-7Fh	BF0h BFFh	Common RAM Accesses 70h-7Fh

Note 1: Unimplemented locations read as '0'
2: Present only on PIC16(L)F19156/76/86.

© 2017-2019 Microchip Technology Inc.

TABLE 4-9: PIC16(L)F19155/56/75/76/85/86 MEMORY MAP, BANKS 24-29

	BANK 24		BANK 25		Bank 26		Bank 27		Bank 28		Bank 29
C00h	Core Registers (Table 4-3)	C80h	Core Registers (Table 4-3)	D00h	Core Registers (Table 4-3)	D80h	Core Registers (Table 4-3)	E00h	Core Registers (Table 4-3)	E80h	Core Registers (Table 4-3)
C0Ch	RTCCON	C8Ch	—	D0Ch	—	D8Ch	—	E0Ch	—	E8Ch	VB0GPR
C0Dh	RTCCAL	C8Dh	—	D0Dh	—	D8Dh	—	E0Dh	—	E8Dh	VB1GPR
C0Eh	ALRMCON	C8Eh	—	D0Eh	—	D8Eh	—	E0Eh	—	E8Eh	VB2GPR
C0Fh	ALRMRPT	C8Fh	—	D0Fh	—	D8Fh	—	E0Fh	—	E8Fh	VB3GPR
C10h	YEAR	C90h	—	D10h	—	D90h	—	E10h	—	E90h	—
C11h	MONTH	C91h	—	D11h	—	D91h	—	E11h	—	E91h	—
C12h	WEEKDAY	C92h	—	D12h	—	D92h	—	E12h	—	E92h	—
C13h	DAY	C93h	—	D13h	—	D93h	—	E13h	—	E93h	—
C14h	HOURS	C94h	—	D14h	—	D94h	—	E14h	—	E94h	—
C15h	MINUTES	C95h	—	D15h	—	D95h	—	E15h	—	E95h	—
C16h	SECONDS	C96h	—	D16h	—	D96h	—	E16h	—	E96h	—
C17h	ALRMMTH	C97h	—	D17h	—	D97h	—	E17h	—	E97h	—
C18h	ALRMWD	C98h	—	D18h	—	D98h	—	E18h	—	E98h	—
C19h	ALRMDAY	C99h	—	D19h	—	D99h	—	E19h	—	E99h	—
C1Ah	ALRMHR	C9Ah	—	D1Ah	—	D9Ah	—	E1Ah	—	E9Ah	—
C1Bh	ALRMMIN	C9Bh	—	D1Bh	—	D9Bh	—	E1Bh	—	E9Bh	—
C1Ch	ALRMSEC	C9Ch	—	D1Ch	—	D9Ch	—	E1Ch	—	E9Ch	—
C1Dh	—	C9Dh	—	D1Dh	—	D9Dh	—	E1Dh	—	E9Dh	—
C1Eh	—	C9Eh	—	D1Eh	—	D9Eh	—	E1Eh	—	E9Eh	—
C1Fh	—	C9Fh	—	D1Fh	—	D9Fh	—	E1Fh	—	E9Fh	—
C20h	General Purpose Register 80 Bytes(2)	CA0h	General Purpose Register 32 Bytes(2)	D20h	—	DA0h	—	E20h	—	EA0h	—
		CBFh									
		CC0h	—								
C6Fh		CEFh		D6Fh		DEFh		E6Fh		EEFh	
C70h	Common RAM Accesses 70h-7Fh	CF0h	Common RAM Accesses 70h-7Fh	D70h	Common RAM Accesses 70h-7Fh	DF0h	Common RAM Accesses 70h-7Fh	E70h	Common RAM Accesses 70h-7Fh	EF0h	Common RAM Accesses 70h-7Fh
C7Fh		CFFh		D7Fh		DFFh		E7Fh		EFFh	

Note 1: Unimplemented locations read as '0'.
2: Present only on PIC16(L)F19156/76/86.
3: Present only on PIC16(L)F19185/86.
4: Banks 30-57 have been omitted from the tables in the data sheet since they have unimplemented registers.
5: See Table 4-4 for general purpose RAM size and bank location.

© 2017-2019 Microchip Technology Inc.

TABLE 4-10: PIC16(L)F19155/56/75/76/85/86 MEMORY MAP, BANKS 58-63

	Bank 58		Bank 59		Bank 60		Bank 61		Bank 62		Bank 63
1D00h	Core Registers (Table 4-3)	1D80h	Core Registers (Table 4-3)	1E00h	Core Registers (Table 4-3)	1E80h	Core Registers (Table 4-3)	1F00h	Core Registers (Table 4-3)	1F80h	Core Registers (Table 4-3)
1D0Ch	LCDCON	1D8Ch	—	1E0Ch	—	1E8Ch	—	1F0Ch	—	1F8Ch	—
1D0Dh	LCDPS	1D8Dh	—	1E0Dh	—	1E8Dh	—	1F0Dh	—	1F8Dh	—
1D0Eh	LCDSE0	1D8Eh	—	1E0Eh	—	1E8Eh	—	1F0Eh	—	1F8Eh	—
1D0Fh	LCDSE1	1D8Fh	—	1E0Fh	CLCDATA	1E8Fh	PPSLOCK	1F0Fh	—	1F8Fh	—
1D10h	LCDSE2	1D90h	—	1E10h	CLC1CON	1E90h	INTPPS	1F10h	RA0PPS	1F90h	—
1D11h	LCDSE3	1D91h	—	1E11h	CLC1POL	1E91h	T0CKIPPS	1F11h	RA1PPS	1F91h	—
1D12h	LCDSE4	1D92h	—	1E12h	CLC1SEL0	1E92h	T1CKIPPS	1F12h	RA2PPS	1F92h	—
1D13h	LCDSE5	1D93h	—	1E13h	CLC1SEL1	1E93h	T1GPPS	1F13h	RA3PPS	1F93h	—
1D14h	LCDVCON1	1D94h	—	1E14h	CLC1SEL2	1E94h	—	1F14h	RA4PPS	1F94h	—
1D15h	LCDVCON2	1D95h	—	1E15h	CLC1SEL3	1E95h	—	1F15h	RA5PPS	1F95h	—
1D16h	LCDREF	1D96h	—	1E16h	CLC1GLS0	1E96h	—	1F16h	RA6PPS	1F96h	—
1D17h	LCDRL	1D97h	—	1E17h	CLC1GLS1	1E97h	—	1F17h	RA7PPS	1F97h	—
1D18h	LCDDATA0	1D98h	—	1E18h	CLC1GLS2	1E98h	—	1F18h	RB0PPS	1F98h	—
1D19h	LCDDATA1	1D99h	—	1E19h	CLC1GLS3	1E99h	—	1F19h	RB1PPS	1F99h	—
1D1Ah	LCDDATA2	1D9Ah	—	1E1Ah	CLC2CON	1E9Ah	—	1F1Ah	RB2PPS	1F9Ah	—
1D1Bh	LCDDATA3	1D9Bh	—	1E1Bh	CLC2POL	1E9Bh	—	1F1Bh	RB3PPS	1F9Bh	—
1D1Ch	LCDDATA4	1D9Ch	—	1E1Ch	CLC2SEL0	1E9Ch	T2AINPPS	1F1Ch	RB4PPS	1F9Ch	—
1D1Dh	LCDDATA5	1D9Dh	—	1E1Dh	CLC2SEL1	1E9Dh	T4AINPPS	1F1Dh	RB5PPS	1F9Dh	—
1D1Eh	LCDDATA6	1D9Eh	—	1E1Eh	CLC2SEL2	1E9Eh	—	1F1Eh	RB6PPS	1F9Eh	—
1D1Fh	LCDDATA7	1D9Fh	—	1E1Fh	CLC2SEL3	1E9Fh	—	1F1Fh	RB7PPS	1F9Fh	—
1D20h	LCDDATA8	1DA0h	—	1E20h	CLC2GLS0	1EA0h	—	1F20h	RC0PPS	1FA0h	—
1D21h	LCDDATA9	1DA1h	—	1E21h	CLC2GLS1	1EA1h	CCP1PPS	1F21h	RC1PPS	1FA1h	—
1D22h	LCDDATA10	1DA2h	—	1E22h	CLC2GLS2	1EA2h	CCP2PPS	1F22h	RC2PPS	1FA2h	—
1D23h	LCDDATA11	1DA3h	—	1E23h	CLC2GLS3	1EA3h	—	1F23h	RC3PPS	1FA3h	—
1D24h	LCDDATA12	1DA4h	—	1E24h	CLC3CON	1EA4h	—	1F24h	RC4PPS	1FA4h	—
1D25h	LCDDATA13	1DA5h	—	1E25h	CLC3POL	1EA5h	—	1F25h	—	1FA5h	—
1D26h	LCDDATA14	1DA6h	—	1E26h	CLC3SEL0	1EA6h	—	1F26h	RC6PPS	1FA6h	—
1D27h	LCDDATA15	1DA7h	—	1E27h	CLC3SEL1	1EA7h	—	1F27h	RC7PPS	1FA7h	—
1D28h	LCDDATA16	1DA8h	—	1E28h	CLC3SEL2	1EA8h	—	1F28h	RD0PPS(2)	1FA8h	—
1D29h	LCDDATA17	1DA9h	—	1E29h	CLC3SEL3	1EA9h	SMT1WINPPS	1F29h	RD1PPS(2)	1FA9h	—
1D2Ah	LCDDATA18	1DAAh	—	1E2Ah	CLC3GLS0	1EAAh	SMT1SIGPPS	1F2Ah	RD2PPS(2)	1FAAh	—
1D2Bh	LCDDATA19	1DABh	—	1E2Bh	CLC3GLS1	1EABh	—	1F2Bh	RD3PPS(2)	1FABh	—
1D2Ch	LCDDATA20	1DACh	—	1E2Ch	CLC3GLS2	1EACh	—	1F2Ch	RD4PPS(2)	1FACh	—
1D2Dh	LCDDATA21	1DADh	—	1E2Dh	CLC3GLS3	1EADh	—	1F2Dh	RD5PPS(2)	1FADh	—
1D2Eh	LCDDATA22	1DAEh	—	1E2Eh	CLC4CON	1EAEh	—	1F2Eh	RD6PPS(2)	1FAEh	—
1D2Fh	LCDDATA23	1DAFh	—	1E2Fh	CLC4POL	1EAFh	—	1F2Fh	RD7PPS(2)	1FAFh	—
1D30h	LCDDATA24	1DB0h	—	1E30h	CLC4SEL0	1EB0h	—	1F30h	RE0PPS(2)	1FB0h	—
1D31h	LCDDATA25	1DB1h	—	1E31h	CLC4SEL1	1EB1h	CWG1PPS	1F31h	RE1PPS(2)	1FB1h	—
1D32h	LCDDATA26	1DB2h	—	1E32h	CLC4SEL2	1EB2h	—	1F32h	RE2PPS(2)	1FB2h	—
1D33h	LCDDATA27	1DB3h	—	1E33h	CLC4SEL3	1EB3h	—	1F33h	—	1FB3h	—
1D34h	LCDDATA28	1DB4h	—	1E34h	CLC4GLS0	1EB4h	—	1F34h	—	1FB4h	—
1D35h	LCDDATA29	1DB5h	—	1E35h	CLC4GLS1	1EB5h	—	1F35h	—	1FB5h	—
1D36h	LCDDATA30	1DB6h	—	1E36h	CLC4GLS2	1EB6h	—	1F36h	—	1FB6h	—
1D37h	LCDDATA31	1DB7h	—	1E37h	CLC4GLS3	1EB7h	—	1F37h	—	1FB7h	—
1D38h	LCDDATA32	1DB8h	—	1E38h	RF0PPS(3)	1EB8h	—	1F38h	ANSELA	1FB8h	—
1D39h	LCDDATA33	1DB9h	—	1E39h	RF1PPS(3)	1EB9h	—	1F39h	WPUA	1FB9h	—
1D3Ah	LCDDATA34	1DBAh	—	1E3Ah	RF2PPS(3)	1EBAh	—	1F3Ah	ODCONA	1FBAh	—

Note 1: Unimplemented locations read as '0'.
2: Present only on PIC16(L)F19175/76/85/86.
3: Present only on PIC16(L)F19185/86.

	Bank 58		Bank 59		Bank 60		Bank 61		Bank 62		Bank 63
1D3Bh	LCDDATA35	1DBBh	—	1E3Bh	RF3PPS(3)	1EBBh	CLCIN0PPS	1F3Bh	SLRCONA	1FBBh	—
1D3Ch	LCDDATA36	1DBCh	—	1E3Ch	RF4PPS(3)	1EBCh	CLCIN1PPS	1F3Ch	INLVLA	1FBCh	—
1D3Dh	LCDDATA37	1DBDh	—	1E3Dh	RF5PPS(3)	1EBDh	CLCIN2PPS	1F3Dh	IOCAP	1FBDh	—
1D3Eh	LCDDATA38	1DBEh	—	1E3Eh	RF6PPS(3)	1EBEh	CLCIN3PPS	1F3Eh	IOCAN	1FBEh	—
1D3Fh	LCDDATA39	1DBFh	—	1E3Fh	RF7PPS(3)	1EBFh	—	1F3Fh	IOCAF	1FBFh	—
1D40h	LCDDATA40	1DC0h	—	1E40h	—	1EC0h	—	1F40h	—	1FC0h	—
1D41h	LCDDATA41	1DC1h	—	1E41h	—	1EC1h	—	1F41h	—	1FC1h	—
1D42h	LCDDATA42	1DC2h	—	1E42h	—	1EC2h	—	1F42h	—	1FC2h	—
1D43h	LCDDATA43	1DC3h	—	1E43h	—	1EC3h	ADCACTPPS	1F43h	ANSELB	1FC3h	—
1D44h	LCDDATA44	1DC4h	—	1E44h	—	1EC4h	—	1F44h	WPUB	1FC4h	—
1D45h	LCDDATA45	1DC5h	—	1E45h	—	1EC5h	SSP1CLKPPS	1F45h	ODCONB	1FC5h	—
1D46h	LCDDATA46	1DC6h	—	1E46h	—	1EC6h	SSP1DATPPS	1F46h	SLRCONB	1FC6h	—
1D47h	LCDDATA47	1DC7h	—	1E47h	—	1EC7h	SSP1SSPPS	1F47h	INLVLB	1FC7h	—
1D48h	—	1DC8h	—	1E48h	—	1EC8h	—	1F48h	IOCBP	1FC8h	—
1D49h	—	1DC9h	—	1E49h	—	1EC9h	—	1F49h	IOCBN	1FC9h	—
1D4Ah	—	1DCAh	—	1E4Ah	—	1ECAh	—	1F4Ah	IOCBF	1FCAh	—
1D4Bh	—	1DCBh	—	1E4Bh	—	1ECBh	RX1PPS	1F4Bh	—	1FCBh	—
1D4Ch	—	1DCCh	—	1E4Ch	—	1ECCh	TX1PPS	1F4Ch	—	1FCCh	—
1D4Dh	—	1DCDh	—	1E4Dh	—	1ECDh	RX2PPS	1F4Dh	—	1FCDh	—
1D4Eh	—	1DCEh	—	1E4Eh	—	1ECEh	TX2PPS	1F4Eh	ANSELC	1FCEh	—
1D4Fh	—	1DCFh	—	1E4Fh	—	1ECFh	—	1F4Fh	WPUC	1FCFh	—
1D50h	—	1DD0h	—	1E50h	ANSELF(3)	1ED0h	—	1F50h	ODCONC	1FD0h	—
1D51h	—	1DD1h	—	1E51h	WPUF(3)	1ED1h	—	1F51h	SLRCONC	1FD1h	—
1D52h	—	1DD2h	—	1E52h	ODCONF(3)	1ED2h	—	1F52h	INLVLC	1FD2h	—
1D53h	—	1DD3h	—	1E53h	SLRCONF(3)	1ED3h	—	1F53h	IOCCP	1FD3h	—
1D54h	—	1DD4h	—	1E54h	INLVLF(3)	1ED4h	—	1F54h	IOCCN	1FD4h	—
1D55h	—	1DD5h	—	1E55h	—	1ED5h	—	1F55h	IOCCF	1FD5h	—
1D56h	—	1DD6h	—	1E56h	—	1ED6h	—	1F56h	—	1FD6h	—
1D57h	—	1DD7h	—	1E57h	—	1ED7h	—	1F57h	—	1FD7h	—
1D58h	—	1DD8h	—	1E58h	—	1ED8h	—	1F58h	—	1FD8h	—
1D59h	—	1DD9h	—	1E59h	—	1ED9h	—	1F59h	ANSELD(2)	1FD9h	—
1D5Ah	—	1DDAh	—	1E5Ah	—	1EDAh	—	1F5Ah	WPUD(2)	1FDAh	—
1D5Bh	—	1DDBh	—	1E5Bh	—	1EDBh	—	1F5Bh	ODCOND(2)	1FDBh	—
1D5Ch	—	1DDCh	—	1E5Ch	—	1EDCh	—	1F5Ch	SLRCOND(2)	1FDCh	—
1D5Dh	—	1DDDh	—	1E5Dh	—	1EDDh	—	1F5Dh	INLVLD(2)	1FDDh	—
1D5Eh	—	1DDEh	—	1E5Eh	—	1EDEh	—	1F5Eh	—	1FDEh	—
1D5Fh	—	1DDFh	—	1E5Fh	—	1EDFh	—	1F5Fh	—	1FDFh	—
1D60h	—	1DE0h	—	1E60h	—	1EE0h	—	1F60h	—	1FE0h	—
1D61h	—	1DE1h	—	1E61h	—	1EE1h	—	1F61h	—	1FE1h	—
1D62h	—	1DE2h	—	1E62h	—	1EE2h	—	1F62h	—	1FE2h	—
1D63h	—	1DE3h	—	1E63h	—	1EE3h	—	1F63h	—	1FE3h	—
1D64h	—	1DE4h	—	1E64h	—	1EE4h	—	1F64h	ANSELE(2)	1FE4h	STATUS_SHAD
1D65h	—	1DE5h	—	1E65h	—	1EE5h	—	1F65h	WPUE	1FE5h	WREG_SHAD
1D66h	—	1DE6h	—	1E66h	—	1EE6h	—	1F66h	ODCONE(2)	1FE6h	BSR_SHAD
1D67h	—	1DE7h	—	1E67h	—	1EE7h	—	1F67h	SLRCONE(2)	1FE7h	PCLATH_SHAD
1D68h	—	1DE8h	—	1E68h	—	1EE8h	—	1F68h	INLVLE	1FE8h	FSR0L_SHAD
1D69h	—	1DE9h	—	1E69h	—	1EE9h	—	1F69h	IOCEP	1FE9h	FSR0H_SHAD
1D6Ah	—	1DEAh	—	1E6Ah	—	1EEAh	—	1F6Ah	IOCEN	1FEAh	FSR1L_SHAD
1D6Bh	—	1DEBh	—	1E6Bh	—	1EEBh	—	1F6Bh	IOCEF	1FEBh	FSR1H_SHAD
1D6Ch	—	1DECh	—	1E6Ch	—	1EECh	—	1F6Ch	—	1FECh	—

Note 1: Unimplemented locations read as '0'.
2: Present only on PIC16(L)F19175/76/85/86.
3: Present only on PIC16(L)F19185/86.

	Bank 58		Bank 59		Bank 60		Bank 61		Bank 62		Bank 63
1D6Dh	—	1DEDh	—	1E6Dh	—	1EEDh	—	1F6Dh	—	1FEDh	STKPTR
1D6Eh	—	1DEEh	—	1E6Eh	—	1EEEh	—	1F6Eh	—	1FEEh	TOSL
1D6Fh	—	1DEFh	—	1E6Fh	—	1EEFh	—	1F6Fh	—	1FEFh	TOSH
1D70h 1D7Fh	Common RAM Accesses 70h-7Fh	1DF0h 1DFFh	Common RAM Accesses 70h-7Fh	1E70h 1E7Fh	Common RAM Accesses 70h-7Fh	1EF0h 1EFFh	Common RAM Accesses 70h-7Fh	1F70h 1F7Fh	Common RAM Accesses 70h-7Fh	1FF0h 1FFFh	Common RAM Accesses 70h-7Fh

Note 1: Unimplemented locations read as '0'.
2: Present only on PIC16(L)F19175/76/85/86.
3: Present only on PIC16(L)F19185/86.

TABLE 4-11: SPECIAL FUNCTION REGISTER SUMMARY BANKS 0-63 (ALL BANKS)

Bank Offset Bank 0-Bank 63	Name	Bit 7	Bit 6	Bit 5	Bit 4	Bit 3	Bit 2	Bit 1	Bit 0	Value on: POR, BOR	Value on: MCLR
All Banks											
x00h or x80h	INDF0	INDF0								xxxx xxxx	xxxx xxxx
x01h or x81h	INDF1	INDF1								xxxx xxxx	xxxx xxxx
x02h or x82h	PCL	PCL								0000 0000	0000 0000
x03h or x83h	STATUS	—	—	—	$\overline{TO}$	$\overline{PD}$	Z	DC	C	---1 1000	---q quuu
x04h or x84h	FSR0L	FSR0L								0000 0000	uuuu uuuu
x05h or x85h	FSR0H	FSR0H								0000 0000	0000 0000
x06h or x86h	FSR1L	FSR1L								0000 0000	uuuu uuuu
x07h or x87h	FSR1H	FSR1H								0000 0000	0000 0000
x08h or x88h	BSR	—	—	BSR						--00 0000	--00 0000
x09h or x89h	WREG	WREG0								0000 0000	uuuu uuuu
x0Ah or x8Ah	PCLATH	—	PCLATH							-000 0000	-000 0000
x0Bh or x8Bh	INTCON	GIE	PEIE	—	—	—	—	—	INTEDG	00-- ---1	00-- ---1

Legend: x = unknown, u = unchanged, q = depends on condition, - = unimplemented, read as '0', r = reserved. Shaded locations unimplemented, read as '0'.

Note 1: These Registers can be accessed from any bank

© 2017-2019 Microchip Technology Inc.

TABLE 4-12: SPECIAL FUNCTION REGISTER SUMMARY BANKS 0-63 PIC16(L)F19155/56/75/76/85/86

Address	Name	Bit 7	Bit 6	Bit 5	Bit 4	Bit 3	Bit 2	Bit 1	Bit 0	Value on: POR, BOR	Value on: MCLR
Bank 0											
CPU CORE REGISTERS; see Table 4-3 for specifics											
0Ch	PORTA	RA7	RA6	RA5	RA4	RA3	RA2	RA1	RA0	xxxx xxxx	uuuu uuuu
0Dh	PORTB	RB7	RB6	RB5	RB4	RB3	RB2	RB1	RB0	xxxx xxxx	uuuu uuuu
0Eh	PORTC	RC7	RC6	—	RC4	RC3	RC2	RC1	RC0	xxxx xxxx	uuuu uuuu
0Fh	PORTD(2)	RD7	RD6	RD5	RD4	RD3	RD2	RD1	RD0	xxxx xxxx	uuuu uuuu
010h	PORTE	—	—	—	—	RE3	RE2(2)	RE1(2)	RE0(2)	---- xxxx	---- uuuu
011h	PORTF(3)	RF7	RF6	RF5	RF4	RF3	RF2	RF1	RF0	xxxx xxxx	uuuu uuuu
012h	TRISA	TRISA7	TRISA6	—	TRISA4	TRISA3	TRISA2	TRISA1	TRISA0	11-1 1111	11-1 1111
013h	TRISB	TRISB7	TRISB6	TRISB5	TRISB4	TRISB3	TRISB2	TRISB1	TRISB0	1111 1111	1111 1111
014h	TRISC	TRISC7	TRISC6	—	TRISC4	TRISC3	TRISC2	TRISC1	TRISC0	11-1 1111	11-1 1111
015h	TRISD(2)	TRISD7	TRISD6	TRISD5	TRISD4	TRISD3	TRISD2	TRISD1	TRISD0	1111 1111	1111 1111
016h	TRISE	—	—	—	—	—	TRISE2(2)	TRISE1(2)	TRISE0(2)	---- 1111	---- 1111
017h	TRISF(3)	TRISF7	TRISF6	TRISF5	TRISF4	TRISF3	TRISF2	TRISF1	TRISF0	1111 1111	1111 1111
018h	LATA	LATA7	LATA6	—	LATA4	LATA3	LATA2	LATA1	LATA0	xx-x xxxx	uu-u uuuu
019h	LATB	LATB7	LATB6	LATB5	LATB4	LATB3	LATB2	LATB1	LATB0	xxxx xxxx	uuuu uuuu
01Ah	LATC	LATC7	LATC6	—	LATC4	LATC3	LATC2	LATC1	LATC0	xx-x xxxx	uu-u uuuu
01Bh	LATD(2)	LATD7	LATD6	LATD5	LATD4	LATD3	LATD2	LATD1	LATD0	xxxx xxxx	uuuu uuuu
01Ch	LATE(2)	—	—	—	—	—	LATE2	LATE1	LATE0	---- -xxx	---- -uuu
01Dh	LATF(3)	LATF7	LATF6	LATF5	LATF4	LATF3	LATF2	LATF1	LATF0	xxxx xxxx	uuuu uuuu
01Eh	—	Unimplemented								---- ----	---- ----
01Fh	ADCPCON0	ADCPON	—	—	—	—	—	—	ADCPRDY	x--- ---x	u--- ---u

Legend: x = unknown, u = unchanged, q = depends on condition, - = unimplemented, read as '0', r = reserved. Shaded locations unimplemented, read as '0'.

Note 1: Unimplemented data memory locations, read as '0'.
2: Present only on PIC16(L)F19175/76/85/86.
3: Present only on PIC16(L)F19185/86.

© 2017-2019 Microchip Technology Inc.

TABLE 4-12: SPECIAL FUNCTION REGISTER SUMMARY BANKS 0-63 PIC16(L)F19155/56/75/76/85/86 (CONTINUED)

Address	Name	Bit 7	Bit 6	Bit 5	Bit 4	Bit 3	Bit 2	Bit 1	Bit 0	Value on: POR, BOR	Value on: MCLR
Bank 1											
CPU CORE REGISTERS; see Table 4-3 for specifics											
08Ch	ADLTHL	LTH								0000 0000	0000 0000
08Dh	ADLTHH	LTH								0000 0000	0000 0000
08Eh	ADUTHL	UTH								0000 0000	0000 0000
08Fh	ADUTHH	UTH								0000 0000	0000 0000
090h	ADERRL	ERR								xxxx xxxx	xxxx xxxx
091h	ADERRH	ERR								xxxx xxxx	xxxx xxxx
092h	ADSTPTL	STPT								0000 0000	0000 0000
093h	ADSTPTH	STPT								0000 0000	0000 0000
094h	ADFLTRL	FLTR								xxxx xxxx	xxxx xxxx
095h	ADFLTRH	FLTR								xxxx xxxx	xxxx xxxx
096h	ADACCL	ACC								xxxx xxxx	xxxx xxxx
097h	ADACCH	ACC								xxxx xxxx	xxxx xxxx
098h	ADACCU	—	—	—	—	—	—	ACC<17:16>		---- -xxx	---- -xxx
099h	ADCNT	CNT								xxxx xxxx	uuuu uuuu
09Ah	ADRPT	RPT								0000 0000	0000 0000
09Bh	ADPREVL	PREV								xxxx xxxx	xxxx xxxx
09Ch	ADPREVH	PREV								xxxx xxxx	xxxx xxxx
09Dh	ADRESL	RES								0000 0000	0000 0000
09Eh	ADRESH	RES								0000 0000	0000 0000
09Fh	ADPCH	—	—	ADPCH<5:0>						--00 0000	--00 0000

Legend: x = unknown, u = unchanged, q = depends on condition, - = unimplemented, read as '0', r = reserved. Shaded locations unimplemented, read as '0'.

Note 1: Unimplemented data memory locations, read as '0'.

© 2017-2019 Microchip Technology Inc.

TABLE 4-12: SPECIAL FUNCTION REGISTER SUMMARY BANKS 0-63 PIC16(L)F19155/56/75/76/85/86 (CONTINUED)

Address	Name	Bit 7	Bit 6	Bit 5	Bit 4	Bit 3	Bit 2	Bit 1	Bit 0	Value on: POR, BOR	Value on: MCLR
Bank 2											
CPU CORE REGISTERS; see Table 4-3 for specifics											
10Ch	ADACQL	ACQ<7:0>								0000 0000	0000 0000
10Dh	ADACQH	—	—	—	ACQ<4:0>					---0 0000	---0 0000
10Eh	ADCAP	—	—	—	ADCAP<4:0>					---0 0000	---0 0000
10Fh	ADPREL	PRE<7:0>								0000 0000	0000 0000
110h	ADPREH	—	—	—	PRE<4:0>					---0 0000	0000 0000
111h	ADCON0	ON	CONT	—	CS	—	FM	—	GO	00-0 -x-0	00-0 -0-0
112h	ADCON1	PPOL	IPEN	GPOL	—	—	—	—	DSEN	000- ---0	000- ---0
113h	ADCON2	PSIS	CRS<2:0>			ACLR	MD<2:0>			0000 0000	0000 0000
114h	ADCON3	—	CALC<2:0>			SOI	TMD<2:0>			-000 0000	-000 0000
115h	ADSTAT	OV	UTHR	LTHR	MATH	—	STAT<2:0>			0000 -000	0000 -000
116h	ADREF	—	—	—	—	—	—	PREF<1:0>		---- -000	---- -000
117h	ADACT	—	—	—	ACT<4:0>					---0 0000	0000 0000
118h	ADCLK	—	—	CS<5:0>						--00 0000	--00 0000
119h	RC1REG	RC1REG								0000 0000	0000 0000
11Ah	TX1REG	TX1REG								0000 0000	0000 0000
11Bh	SP1BRGL	SP1BRGL								0000 0000	0000 0000
11Ch	SP1BRGH	SP1BRGH								0000 0000	0000 0000
11Dh	RC1STA	SPEN	RX9	SREN	CREN	ADDEN	FERR	OERR	RX9D	0000 0000	0000 0000
11Eh	TX1STA	CSRC	TX9	TXEN	SYNC	SENDB	BRGH	TRMT	TX9D	0000 0010	0000 0010
11Fh	BAUD1CON	ABDOVF	RCIDL	—	SCKP	BRG16	—	WUE	ABDEN	01-0 0-00	01-0 0-00

Legend: x = unknown, u = unchanged, q = depends on condition, - = unimplemented, read as '0', r = reserved. Shaded locations unimplemented, read as '0'.

Note 1: Unimplemented data memory locations, read as '0'.

© 2017-2019 Microchip Technology Inc.

TABLE 4-12: SPECIAL FUNCTION REGISTER SUMMARY BANKS 0-63 PIC16(L)F19155/56/75/76/85/86 (CONTINUED)

Address	Name	Bit 7	Bit 6	Bit 5	Bit 4	Bit 3	Bit 2	Bit 1	Bit 0	Value on: POR, BOR	Value on: MCLR
Bank 3											
CPU CORE REGISTERS; see Table 4-3 for specifics											
18Ch	SSP1BUF	SSPxBUF								xxxx xxxx	xxxx xxxx
18Dh	SSP1ADD	SSPxADD								0000 0000	0000 0000
18Eh	SSP1MSK	SSPxMSK								1111 1111	1111 1111
18Fh	SSP1STAT	SMP	CKE	D/$\overline{A}$	P	S	R/$\overline{W}$	UA	BF	0000 0000	0000 0000
190h	SSP1CON1	WCOL	SSPOV	SSPEN	CKP	SSPM3	SSPM2	SSPM1	SSPM0	0000 0000	0000 0000
191h	SSP1CON2	GCEN	ACKSTAT	ACKDT	ACKEN	RCEN	PEN	RSEN	SEN	0000 0000	0000 0000
192h	SSP1CON3	ACKTIM	PCIE	SCIE	BOEN	SDAHT	SBCDE	AHEN	DHEN	0000 0000	0000 0000
193h	—	Unimplemented								---- ----	---- ----
194h	—	Unimplemented								---- ----	---- ----
195h	—	Unimplemented								---- ----	---- ----
196h	—	Unimplemented								---- ----	---- ----
197h	—	Unimplemented								---- ----	---- ----
198h	—	Unimplemented								---- ----	---- ----
199h	—	Unimplemented								---- ----	---- ----
19Ah	—	Unimplemented								---- ----	---- ----
19Bh	—	Unimplemented								---- ----	---- ----
19Ch	—	Unimplemented								---- ----	---- ----
19Dh	—	Unimplemented								---- ----	---- ----
19Eh	—	Unimplemented								---- ----	---- ----
19Fh	—	Unimplemented								---- ----	---- ----

Legend: x = unknown, u = unchanged, q = depends on condition, - = unimplemented, read as '0', r = reserved. Shaded locations unimplemented, read as '0'.

Note 1: Unimplemented data memory locations, read as '0'.

© 2017-2019 Microchip Technology Inc.

TABLE 4-12: SPECIAL FUNCTION REGISTER SUMMARY BANKS 0-63 PIC16(L)F19155/56/75/76/85/86 (CONTINUED)

Address	Name	Bit 7	Bit 6	Bit 5	Bit 4	Bit 3	Bit 2	Bit 1	Bit 0	Value on: POR, BOR	Value on: MCLR
Bank 4											
CPU CORE REGISTERS; see Table 4-3 for specifics											
20Ch	TMR1L	TMR1L7	TMR1L6	TMR1L5	TMR1L4	TMR1L3	TMR1L2	TMR1L1	TMR1L0	0000 0000	uuuu uuuu
		TMR1L								0000 0000	uuuu uuuu
20Dh	TMR1H	TMR1H7	TMR1H6	TMR1H5	TMR1H4	TMR1H3	TMR1H2	TMR1H1	TMR1H0	0000 0000	uuuu uuuu
		TMR1H								0000 0000	uuuu uuuu
20Eh	T1CON	—	—	CKPS<1:0>		—	$\overline{\text{SYNC}}$	RD16	ON	--00 -000	--uu -u0u
20Fh	T1GCON	GE	GPOL	GTM	GSPM	GGO/$\overline{\text{DONE}}$	GVAL	—	—	0000 0x--	uuuu ux--
210h	T1GATE	—	—	—	GSS<4:0>					---0 0000	---u uuuu
211h	T1CLK	—	—	—	—	CS<3:0>				---- 0000	---- uuuu
212h	—	Unimplemented								---- ----	---- ----
213h	—	Unimplemented								---- ----	---- ----
214h	—	Unimplemented								---- ----	---- ----
215h	—	Unimplemented								---- ----	---- ----
216h	—	Unimplemented								---- ----	---- ----
217h	—	Unimplemented								---- ----	---- ----
218h	—	Unimplemented								---- ----	---- ----
219h	—	Unimplemented								---- ----	---- ----
21Ah	—	Unimplemented								---- ----	---- ----
21Bh	—	Unimplemented								---- ----	---- ----
21Ch	—	Unimplemented								---- ----	---- ----
21Dh	—	Unimplemented								---- ----	---- ----
21Eh	CCPTMRS0	P4TSEL<1:0>		P3TSEL1:0>		C2TSEL<1:0>		C1TSEL<1:0>		0101 0101	0101 0101
21Fh	—	Unimplemented								---- ----	---- ----

Legend: x = unknown, u = unchanged, q = depends on condition, - = unimplemented, read as '0', r = reserved. Shaded locations unimplemented, read as '0'.

Note 1: Unimplemented data memory locations, read as '0'.

© 2017-2019 Microchip Technology Inc.

TABLE 4-12: SPECIAL FUNCTION REGISTER SUMMARY BANKS 0-63 PIC16(L)F19155/56/75/76/85/86 (CONTINUED)

Address	Name	Bit 7	Bit 6	Bit 5	Bit 4	Bit 3	Bit 2	Bit 1	Bit 0	Value on: POR, BOR	Value on: MCLR
Bank 5											
CPU CORE REGISTERS; see Table 4-3 for specifics											
28Ch	T2TMR	TMR2								0000 0000	0000 0000
28Dh	T2PR	PR2								1111 1111	1111 1111
28Eh	T2CON	ON	CKPS<2:0>			OUTPS<3:0>				0000 0000	0000 0000
28Fh	T2HLT	PSYNC	CKPOL	CKSYNC	MODE<4:0>					0000 0000	0000 0000
290h	T2CLKCON	—	—	—	—	CS<3:0>				---- 0000	---- 0000
291h	T2RST	—	—	—	—	RSEL<3:0>				---- 0000	---- 0000
292h	T4TMR	TMR4								0000 0000	0000 0000
293h	T4PR	PR4								1111 1111	1111 1111
294h	T4CON	ON	CKPS<2:0>			OUTPS<3:0>				0000 0000	0000 0000
295h	T4HLT	PSYNC	CKPOL	CKSYNC	MODE<4:0>					0000 0000	0000 0000
296h	T4CLKCON	—	—	—	—	CS<3:0>				---- 0000	---- 0000
297h	T4RST	—	—	—	—	RSEL<3:0>				---- 0000	---- 0000
298h	—	Unimplemented								---- ----	---- ----
299h	—	Unimplemented								---- ----	---- ----
29Ah	—	Unimplemented								---- ----	---- ----
29Bh	—	Unimplemented								---- ----	---- ----
29Ch	—	Unimplemented								---- ----	---- ----
29Dh	—	Unimplemented								---- ----	---- ----
29Eh	—	Unimplemented								---- ----	---- ----
29Fh	—	Unimplemented								---- ----	---- ----

Legend: x = unknown, u = unchanged, q = depends on condition, - = unimplemented, read as '0', r = reserved. Shaded locations unimplemented, read as '0'.

Note 1: Unimplemented data memory locations, read as '0'.

© 2017-2019 Microchip Technology Inc.

TABLE 4-12: SPECIAL FUNCTION REGISTER SUMMARY BANKS 0-63 PIC16(L)F19155/56/75/76/85/86 (CONTINUED)

Address	Name	Bit 7	Bit 6	Bit 5	Bit 4	Bit 3	Bit 2	Bit 1	Bit 0	Value on: POR, BOR	Value on: MCLR
Bank 6											
CPU CORE REGISTERS; see Table 4-3 for specifics											
30Ch	CCPR1L	RL								xxxx xxxx	uuuu uuuu
30Dh	CCPR1H	RH								xxxx xxxx	uuuu uuuu
30Eh	CCP1CON	CCP1EN	—	CCP1OUT	CCP1FMT	CCP1MODE<3:0>				0-00 0000	0-00 0000
		—		—	—	CCP1MODE3	CCP1MODE2	CCP1MODE1	CCP1MODE0	-0-- 0000	-0-- 0000
30Fh	CCP1CAP	CCP1CTS								0000 0000	0000 0000
		—	—	—	—	—	CCP1CTS2	CCP1CTS1	CCP1CTS0	---- -000	---- -000
310h	CCPR2L	RL								xxxx xxxx	uuuu uuuu
311h	CCPR2H	RH								xxxx xxxx	uuuu uuuu
312h	CCP2CON	CCP2EN	—	CCP2OUT	CCP2FMT	CCP2MODE<3:0>				0-00 0000	0-00 0000
		—		—	—	CCP2MODE3	CCP2MODE2	CCP2MODE1	CCP2MODE0	-0-- 0000	-0-- 0000
313h	CCP2CAP	CCP2CTS								0000 0000	0000 0000
		—	—	—	—	—	CCP2CTS2	CCP2CTS1	CCP2CTS0	---- -000	---- -000
314h	PWM3DCL	PWM3DC<1:0>		—	—	—	—	—	—	xx-- ----	uu-- ----
		PWM3DC1	PWM3DC0	—	—	—	—	—	—	xx-- ----	uu-- ----
315h	PWM3DCH	PWM3DC								xxxx xxxx	uuuu uuuu
		PWM3DC9	PWM3DC8	PWM3DC7	PWM3DC6	PWM3DC5	PWM3DC4	PWM3DC3	PWM3DC2	xxxx xxxx	uuuu uuuu
316h	PWM3CON	PWM3EN	—	PWM3OUT	PWM3POL	—	—	—	—	0-00 ----	0-00 ----
317h	—	Unimplemented								---- ----	---- ----
318h	PWM4DCL	PWM4DC<1:0>		—	—	—	—	—	—	xx-- ----	uu-- ----
		PWM4DC1	PWM4DC0	—	—	—	—	—	—	xx-- ----	uu-- ----
319h	PWM4DCH	PWM4DC								xxxx xxxx	uuuu uuuu
		PWM4DC9	PWM4DC8	PWM4DC7	PWM4DC6	PWM4DC5	PWM4DC4	PWM4DC3	PWM4DC2	xxxx xxxx	uuuu uuuu
31Ah	PWM4CON	PWM4EN	—	PWM4OUT	PWM4POL	—	—	—	—	0-00 ----	0-00 ----
31Bh 31Fh	—	Unimplemented								---- ----	---- ----

Legend: x = unknown, u = unchanged, q = depends on condition, - = unimplemented, read as '0', r = reserved. Shaded locations unimplemented, read as '0'.

Note 1: Unimplemented data memory locations, read as '0'.

© 2017-2019 Microchip Technology Inc.

TABLE 4-12: SPECIAL FUNCTION REGISTER SUMMARY BANKS 0-63 PIC16(L)F19155/56/75/76/85/86 (CONTINUED)

Address	Name	Bit 7	Bit 6	Bit 5	Bit 4	Bit 3	Bit 2	Bit 1	Bit 0	Value on: POR, BOR	Value on: MCLR
Bank 7											
CPU CORE REGISTERS; see Table 4-3 for specifics											
38Ch	—	Unimplemented								---- ----	---- ----
38Dh	—	Unimplemented								---- ----	---- ----
38Eh	—	Unimplemented								---- ----	---- ----
38Fh	—	Unimplemented								---- ----	---- ----
390h	—	Unimplemented								---- ----	---- ----
391h	—	Unimplemented								---- ----	---- ----
392h	—	Unimplemented								---- ----	---- ----
393h	—	Unimplemented								---- ----	---- ----
394h	—	Unimplemented								---- ----	---- ----
395h	—	Unimplemented								---- ----	---- ----
396h	—	Unimplemented								---- ----	---- ----
397h	—	Unimplemented								---- ----	---- ----
398h	—	Unimplemented								---- ----	---- ----
399h	—	Unimplemented								---- ----	---- ----
39Ah	—	Unimplemented								---- ----	---- ----
39Bh	—	Unimplemented								---- ----	---- ----
39Ch	—	Unimplemented								---- ----	---- ----
39Dh	—	Unimplemented								---- ----	---- ----
39Eh	—	Unimplemented								---- ----	---- ----
39Fh	—	Unimplemented								---- ----	---- ----

Legend: x = unknown, u = unchanged, q = depends on condition, - = unimplemented, read as '0', r = reserved. Shaded locations unimplemented, read as '0'.

Note 1: Unimplemented data memory locations, read as '0'.

© 2017-2019 Microchip Technology Inc.

TABLE 4-12: SPECIAL FUNCTION REGISTER SUMMARY BANKS 0-63 PIC16(L)F19155/56/75/76/85/86 (CONTINUED)

Address	Name	Bit 7	Bit 6	Bit 5	Bit 4	Bit 3	Bit 2	Bit 1	Bit 0	Value on: POR, BOR	Value on: MCLR
Bank 8											
CPU CORE REGISTERS; see Table 4-3 for specifics											
40Ch	—	Unimplemented								---- ----	---- ----
40Dh	HIDRVB	—	—	—	—	—	—	HIDB1	—	---- ---0-	---- ---0-
40Eh	—	Unimplemented								---- ----	---- ----
40Fh	—	Unimplemented								---- ----	---- ----
410h	—	Unimplemented								---- ----	---- ----
411h	—	Unimplemented								---- ----	---- ----
412h	—	Unimplemented								---- ----	---- ----
413h	—	Unimplemented								---- ----	---- ----
414h	—	Unimplemented								---- ----	---- ----
415h	—	Unimplemented								---- ----	---- ----
416h	—	Unimplemented								---- ----	---- ----
417h	—	Unimplemented								---- ----	---- ----
418h	—	Unimplemented								---- ----	---- ----
419h	—	Unimplemented								---- ----	---- ----
41Ah	—	Unimplemented								---- ----	---- ----
41Bh	—	Unimplemented								---- ----	---- ----
41Ch	—	Unimplemented								---- ----	---- ----
41Dh	—	Unimplemented								---- ----	---- ----
41Eh	—	Unimplemented								---- ----	---- ----
41Fh	—	Unimplemented								---- ----	---- ----

Legend: x = unknown, u = unchanged, q = depends on condition, - = unimplemented, read as '0', r = reserved. Shaded locations unimplemented, read as '0'.

Note 1: Unimplemented data memory locations, read as '0'.

© 2017-2019 Microchip Technology Inc.

TABLE 4-12: SPECIAL FUNCTION REGISTER SUMMARY BANKS 0-63 PIC16(L)F19155/56/75/76/85/86 (CONTINUED)

Address	Name	Bit 7	Bit 6	Bit 5	Bit 4	Bit 3	Bit 2	Bit 1	Bit 0	Value on: POR, BOR	Value on: MCLR
Bank 9											
CPU CORE REGISTERS; see Table 4-3 for specifics											
48Ch	SMT1TMRL	SMT1TMR								0000 0000	0000 0000
48Dh	SMT1TMRH	SMT1TMR								0000 0000	0000 0000
48Eh	SMT1TMRU	SMT1TMR								0000 0000	0000 0000
48Fh	SMT1CPRL	CPR								xxxx xxxx	xxxx xxxx
490h	SMT1CPRH	CPR								xxxx xxxx	xxxx xxxx
491h	SMT1CPRU	CPR								xxxx xxxx	xxxx xxxx
492h	SMT1CPWL	CPW								xxxx xxxx	xxxx xxxx
493h	SMT1CPWH	CPW								xxxx xxxx	xxxx xxxx
494h	SMT1CPWU	CPW								xxxx xxxx	xxxx xxxx
495h	SMT1PRL	SMT1PR								1111 1111	1111 1111
496h	SMT1PRH	SMT1PR								1111 1111	1111 1111
497h	SMT1PRU	SMT1PR								1111 1111	1111 1111
498h	SMT1CON0	EN	—	STP	WPOL	SPOL	CPOL	SMT1PS<1:0>		0-00 0000	0-00 0000
499h	SMT1CON1	SMT1GO	REPEAT	—	—	MODE<3:0>				00-- 0000	00-- 0000
49Ah	SMT1STAT	CPRUP	CPWUP	RST	—	—	TS	WS	AS	000- -000	000- -000
49Bh	SMT1CLK	—	—	—	—	—	CSEL<2:0>			---- -000	---- -000
49Ch	SMT1SIG	—	—	—	SSEL<4:0>					---0 0000	---0 0000
49Dh	SMT1WIN	—	—	—	WSEL<4:0>					---0 0000	---0 0000
49Eh	—	Unimplemented								---- ----	---- ----
49Fh	—	Unimplemented								---- ----	---- ----

Legend: x = unknown, u = unchanged, q = depends on condition, - = unimplemented, read as '0', r = reserved. Shaded locations unimplemented, read as '0'.

Note 1: Unimplemented data memory locations, read as '0'.

© 2017-2019 Microchip Technology Inc.

TABLE 4-12: SPECIAL FUNCTION REGISTER SUMMARY BANKS 0-63 PIC16(L)F19155/56/75/76/85/86 (CONTINUED)

Address	Name	Bit 7	Bit 6	Bit 5	Bit 4	Bit 3	Bit 2	Bit 1	Bit 0	Value on: POR, BOR	Value on: MCLR
Bank 10											
CPU CORE REGISTERS; see Table 4-3 for specifics											
50Ch	—	Unimplemented								---- ----	---- ----
50Dh	—	Unimplemented								---- ----	---- ----
50Eh	—	Unimplemented								---- ----	---- ----
50Fh	—	Unimplemented								---- ----	---- ----
510h	—	Unimplemented								---- ----	---- ----
511h	—	Unimplemented								---- ----	---- ----
512h	—	Unimplemented								---- ----	---- ----
513h	—	Unimplemented								---- ----	---- ----
514h	—	Unimplemented								---- ----	---- ----
515h	—	Unimplemented								---- ----	---- ----
516h	—	Unimplemented								---- ----	---- ----
517h	—	Unimplemented								---- ----	---- ----
518h	—	Unimplemented								---- ----	---- ----
519h	—	Unimplemented								---- ----	---- ----
51Ah	—	Unimplemented								---- ----	---- ----
51Bh	—	Unimplemented								---- ----	---- ----
51Ch	—	Unimplemented								---- ----	---- ----
51Dh	—	Unimplemented								---- ----	---- ----
51Eh	—	Unimplemented								---- ----	---- ----
51Fh	—	Unimplemented								---- ----	---- ----

Legend: x = unknown, u = unchanged, q = depends on condition, - = unimplemented, read as '0', r = reserved. Shaded locations unimplemented, read as '0'.

Note 1: Unimplemented data memory locations, read as '0'.

© 2017-2019 Microchip Technology Inc.

TABLE 4-12: SPECIAL FUNCTION REGISTER SUMMARY BANKS 0-63 PIC16(L)F19155/56/75/76/85/86 (CONTINUED)

Address	Name	Bit 7	Bit 6	Bit 5	Bit 4	Bit 3	Bit 2	Bit 1	Bit 0	Value on: POR, BOR	Value on: MCLR
Bank 11											
CPU CORE REGISTERS; see Table 4-3 for specifics											
58Ch	—	Unimplemented								---- ----	---- ----
58Dh	—	Unimplemented								---- ----	---- ----
58Eh	—	Unimplemented								---- ----	---- ----
58Fh	—	Unimplemented								---- ----	---- ----
590h	—	Unimplemented								---- ----	---- ----
591h	—	Unimplemented								---- ----	---- ----
592h	—	Unimplemented								---- ----	---- ----
593h	—	Unimplemented								---- ----	---- ----
594h	—	Unimplemented								---- ----	---- ----
595h	—	Unimplemented								---- ----	---- ----
596h	—	Unimplemented								---- ----	---- ----
597h	—	Unimplemented								---- ----	---- ----
598h	—	Unimplemented								---- ----	---- ----
599h	—	Unimplemented								---- ----	---- ----
59Ah	—	Unimplemented								---- ----	---- ----
59Bh	—	Unimplemented								---- ----	---- ----
59Ch	TMR0L	TMR0L								0000 0000	0000 0000
59Dh	TMR0H	TMR0H								1111 1111	1111 1111
		T0PR								1111 1111	1111 1111
59Eh	T0CON0	T0EN	—	T0OUT	T016BIT	T0OUTPS<3:0>				0-00 0000	0-00 0000
59Fh	T0CON1	T0CS<2:0>			T0ASYNC	T0CKPS<3:0>				0000 0000	0000 0000

Legend: x = unknown, u = unchanged, q = depends on condition, - = unimplemented, read as '0', r = reserved. Shaded locations unimplemented, read as '0'.

Note 1: Unimplemented data memory locations, read as '0'.

© 2017-2019 Microchip Technology Inc.

TABLE 4-12: SPECIAL FUNCTION REGISTER SUMMARY BANKS 0-63 PIC16(L)F19155/56/75/76/85/86 (CONTINUED)

Address	Name	Bit 7	Bit 6	Bit 5	Bit 4	Bit 3	Bit 2	Bit 1	Bit 0	Value on: POR, BOR	Value on: MCLR
Bank 12											
CPU CORE REGISTERS; see Table 4-3 for specifics											
60Ch	CWG1CLKCON	—	—	—	—	—	—	—	CS	---- ---0	---- ---0
60Dh	CWG1ISM	—	—	—	—	IS<3:0>				---- 0000	---- 0000
60Eh	CWG1DBR	—	—	DBR<5:0>						--00 0000	--00 0000
60Fh	CWG1DBF	—	—	DBF<5:0>						--00 0000	--00 0000
610h	CWG1CON0	EN	LD	—	—	—	MODE<2:0>			00-- -000	00-- -000
611h	CWG1CON1	—	—	IN	—	POLD	POLC	POLB	POLA	--x- 0000	--u- 0000
612h	CWG1AS0	SHUTDOWN	REN	LSBD<1:0>		LSAC<1:0>		—	—	0001 01--	0001 01--
613h	CWG1AS1	—	—	—	AS4E	AS3E	AS2E	AS1E	AS0E	---0 0000	---u 0000
614h	CWG1STR	OVRD	OVRC	OVRB	OVRA	STRD	STRC	STRB	STRA	0000 0000	0000 0000
615h	—	Unimplemented								---- ----	---- ----
616h	—	Unimplemented								---- ----	---- ----
617h	—	Unimplemented								---- ----	---- ----
618h	—	Unimplemented								---- ----	---- ----
619h	—	Unimplemented								---- ----	---- ----
61Ah	—	Unimplemented								---- ----	---- ----
61Bh	—	Unimplemented								---- ----	---- ----
61Ch	—	Unimplemented								---- ----	---- ----
61Dh	—	Unimplemented								---- ----	---- ----
61Eh	—	Unimplemented								---- ----	---- ----
61Fh	—	Unimplemented								---- ----	---- ----

Legend: x = unknown, u = unchanged, q = depends on condition, - = unimplemented, read as '0', r = reserved. Shaded locations unimplemented, read as '0'.

Note 1: Unimplemented data memory locations, read as '0'.

© 2017-2019 Microchip Technology Inc.

TABLE 4-12: SPECIAL FUNCTION REGISTER SUMMARY BANKS 0-63 PIC16(L)F19155/56/75/76/85/86 (CONTINUED)

Address	Name	Bit 7	Bit 6	Bit 5	Bit 4	Bit 3	Bit 2	Bit 1	Bit 0	Value on: POR, BOR	Value on: MCLR
Bank 13											
CPU CORE REGISTERS; see Table 4-3 for specifics											
68Ch	—	Unimplemented								---- ----	---- ----
68Dh	—	Unimplemented								---- ----	---- ----
68Eh	—	Unimplemented								---- ----	---- ----
68Fh	—	Unimplemented								---- ----	---- ----
690h	—	Unimplemented								---- ----	---- ----
691h	—	Unimplemented								---- ----	---- ----
692h	—	Unimplemented								---- ----	---- ----
693h	—	Unimplemented								---- ----	---- ----
694h	—	Unimplemented								---- ----	---- ----
695h	—	Unimplemented								---- ----	---- ----
696h	—	Unimplemented								---- ----	---- ----
697h	—	Unimplemented								---- ----	---- ----
698h	—	Unimplemented								---- ----	---- ----
699h	—	Unimplemented								---- ----	---- ----
69Ah	—	Unimplemented								---- ----	---- ----
69Bh	—	Unimplemented								---- ----	---- ----
69Ch	—	Unimplemented								---- ----	---- ----
69Dh	—	Unimplemented								---- ----	---- ----
69Eh	—	Unimplemented								---- ----	---- ----
69Fh	—	Unimplemented								---- ----	---- ----

Legend: x = unknown, u = unchanged, q = depends on condition, - = unimplemented, read as '0', r = reserved. Shaded locations unimplemented, read as '0'.

Note 1: Unimplemented data memory locations, read as '0'.

© 2017-2019 Microchip Technology Inc.

TABLE 4-12: SPECIAL FUNCTION REGISTER SUMMARY BANKS 0-63 PIC16(L)F19155/56/75/76/85/86 (CONTINUED)

Address	Name	Bit 7	Bit 6	Bit 5	Bit 4	Bit 3	Bit 2	Bit 1	Bit 0	Value on: POR, BOR	Value on: MCLR
Bank 14											
CPU CORE REGISTERS; see Table 4-3 for specifics											
70Ch	PIR0	—	—	TMR0IF	IOCIF	—	—	—	INTF	--00 ---1	00-- ---1
70Dh	PIR1	OSFIF	CSWIF	—	—	—	—	ADTIF	ADIF	00-- --00	00-- --00
70Eh	PIR2	—	ZCDIF	—	—	—	—	C2IF	C1IF	-0-- --00	-0-- --00
70Fh	PIR3	RC2IF	TX2IF	RC1IF	TX1IF	—	—	BCL1IF	SSP1IF	0000 --00	0000 --00
710h	PIR4	—	—	—	—	TMR4IF	—	TMR2IF	TMR1IF	---- 0-00	---- 0-00
711h	PIR5	CLC4IF	CLC3IF	CLC2IF	CLC1IF	—	—	—	TMR1GIF	0000 ---0	0000 ---0
712h	PIR6	CRIF	—	—	—	—	—	CCP2IF	CCP1IF	0--- --00	0--- --00
713h	PIR7	—	—	NVMIF	—	—	—	—	CWG1IF	--0- ---0	--0- ---0
714h	PIR8	LCDIF	RTCCIF	—	—	—	SMT1PWAIF	SMT1PRAIF	SMT1IF	00-- -000	00-- -000
715h	—	Unimplemented								---- ----	---- ----
716h	PIE0	—	—	TMR0IE	IOCIE	—	—	—	INTE	--00 ---0	--00 ---0
717h	PIE1	OSFIE	CSWIE	—	—	—	—	ADTIE	ADIE	00-- --00	00-- --00
718h	PIE2	—	ZCDIE	—	—	—	—	C2IE	C1IE	-0-- --00	-0-- --00
719h	PIE3	RC2IE	TX2IE	RC1IE	TX1IE	—	—	BCL1IE	SSP1IE	0000 --00	0000 --00
71Ah	PIE4	—	—	—	—	TMR4IF	—	TMR2IE	TMR1IE	---- 0-00	---- 0-00
71Bh	PIE5	CLC4IE	CLC3IE	CLC2IE	CLC1IE	—	—	—	TMR1GIE	0000 ---0	0000 ---0
71Ch	PIE6	CRIE	—	—	—	—	—	CCP2IE	CCP1IE	0--- --00	0--- --00
71Dh	PIE7	—	—	NVMIE	—	—	—	—	CWG1IE	--0- ---0	--0- ---0
71Eh	PIE8	LCDIE	RTCCIE	—	—	—	SMT1PWAIE	SMT1PRAIE	SMT1IE	00-- -000	00-- -000
71Fh	—	Unimplemented								---- ----	---- ----

Legend: x = unknown, u = unchanged, q = depends on condition, - = unimplemented, read as '0', r = reserved. Shaded locations unimplemented, read as '0'.

Note 1: Unimplemented data memory locations, read as '0'.

© 2017-2019 Microchip Technology Inc.

TABLE 4-12: SPECIAL FUNCTION REGISTER SUMMARY BANKS 0-63 PIC16(L)F19155/56/75/76/85/86 (CONTINUED)

Address	Name	Bit 7	Bit 6	Bit 5	Bit 4	Bit 3	Bit 2	Bit 1	Bit 0	Value on: POR, BOR	Value on: MCLR
Bank 15											
CPU CORE REGISTERS; see Table 4-3 for specifics											
78Ch	—	Unimplemented								---- ----	---- ----
78Dh	—	Unimplemented								---- ----	---- ----
78Eh	—	Unimplemented								---- ----	---- ----
78Fh	—	Unimplemented								---- ----	---- ----
790h	—	Unimplemented								---- ----	---- ----
791h	—	Unimplemented								---- ----	---- ----
792h	—	Unimplemented								---- ----	---- ----
793h	—	Unimplemented								---- ----	---- ----
794h	—	Unimplemented								---- ----	---- ----
795h	—	Unimplemented								---- ----	---- ----
796h	PMD0	SYSCMD	FVRMD	ACTMD	—	—	NVMMD	—	IOCMD	000- -0-0	000- -0-0
797h	PMD1	—	—	—	TMR4MD	—	TMR2MD	TMR1MD	TMR0MD	---0 -000	0000 0000
798h	PMD2	RTCCMD	DACMD	ADCMD	—	—	CMP2MD	CMP1MD	ZCDMD	000- -000	000- -000
799h	PMD3	—	—	—	—	PWM4MD	PWM3MD	CCP2MD	CCP1MD	---- 0000	---- 0000
79Ah	PMD4	UART2MD	UART1MD	—	MSSP1MD	—	—	—	CWG1MD	00-0 ---0	00-0 ---0
79Bh	PMD5	—	SMT1MD	LCDMD	CLC4MD	CLC3MD	CLC2MD	CLC1MD	—	-000 000-	-000 000-
79Ch	—	Unimplemented								---- ----	---- ----
79Dh	—	Unimplemented								---- ----	---- ----
79Eh	—	Unimplemented								---- ----	---- ----
79Fh	—	Unimplemented								---- ----	---- ----

Legend: x = unknown, u = unchanged, q = depends on condition, - = unimplemented, read as '0', r = reserved. Shaded locations unimplemented, read as '0'.

Note 1: Unimplemented data memory locations, read as '0'.

© 2017-2019 Microchip Technology Inc.

TABLE 4-12: SPECIAL FUNCTION REGISTER SUMMARY BANKS 0-63 PIC16(L)F19155/56/75/76/85/86 (CONTINUED)

Address	Name	Bit 7	Bit 6	Bit 5	Bit 4	Bit 3	Bit 2	Bit 1	Bit 0	Value on: POR, BOR	Value on: MCLR
Bank 16											
CPU CORE REGISTERS; see Table 4-3 for specifics											
80Ch	WDTCON0	—	—	WDTPS<4:0>					SWDTEN	--qq qqq0	--qq qqq0
80Dh	WDTCON1	—	WDTCS<2:0>			—	WINDOW<2:0>			-qqq -qqq	-qqq -qqq
80Eh	WDTPSL	PSCNT								0000 0000	0000 0000
80Fh	WDTPSH	PSCNT								0000 0000	0000 0000
810h	WDTTMR	—	WDTTMR<3:0>				STATE	PSCNT17	PSCNT16	-xxx x000	-xxx x000
811h	BORCON	SBOREN	—	—	—	—	—	—	BORRDY	1--- ---q	u--- ---u
812h	VREGCON	—	—	—	—	—	—	VREGPM	—	---- --x-	---- --x-
813h	PCON0	STKOVF	STKUNF	$\overline{\text{WDTWV}}$	$\overline{\text{RWDT}}$	$\overline{\text{RMCLR}}$	$\overline{\text{RI}}$	$\overline{\text{POR}}$	$\overline{\text{BOR}}$	0011 110q	qqqq qquu
814h	PCON1	—	—	—	—	—	—	$\overline{\text{MEMV}}$	$\overline{\text{VBATBOR}}$	---- --1x	---- --qu
815h	—	Unimplemented								---- ----	---- ----
816h	—	Unimplemented								---- ----	---- ----
817h	—	Unimplemented								---- ----	---- ----
818h	—	Unimplemented								---- ----	---- ----
819h	—	Unimplemented								---- ----	---- ----
81Ah	NVMADRL	NVMADR7	NVMADR6	NVMADR5	NVMADR4	NVMADR3	NVMADR2	NVMADR1	NVMADR0	xxxx xxxx	uuuu uuuu
81Bh	NVMADRH	—	NVMADR14	NVMADR13	NVMADR12	NVMADR11	NVMADR10	NVMADR9	NVMADR8	1xxx xxxx	1uuu uuuu
81Ch	NVMDATL	NVMDAT7	NVMDAT6	NVMDAT5	NVMDAT4	NVMDAT3	NVMDAT2	NVMDAT1	NVMDAT0	0000 0000	0000 0000
81Dh	NVMDATH	—	—	NVMDAT13	NVMDAT12	NVMDAT11	NVMDAT10	NVMDAT9	NVMDAT8	--00 0000	--00 0000
81Eh	NVMCON1	—	NVMREGS	LWLO	FREE	WRERR	WREN	WR	RD	-000 0000	-000 0000
81Fh	NVMCON2	NVMCON2<7:0>								---- ----	---- ----

Legend: x = unknown, u = unchanged, q = depends on condition, - = unimplemented, read as '0', r = reserved. Shaded locations unimplemented, read as '0'.

Note 1: Unimplemented data memory locations, read as '0'.

© 2017-2019 Microchip Technology Inc.

TABLE 4-12: SPECIAL FUNCTION REGISTER SUMMARY BANKS 0-63 PIC16(L)F19155/56/75/76/85/86 (CONTINUED)

Address	Name	Bit 7	Bit 6	Bit 5	Bit 4	Bit 3	Bit 2	Bit 1	Bit 0	Value on: POR, BOR	Value on: MCLR
Bank 17											
CPU CORE REGISTERS; see Table 4-3 for specifics											
88Ch	CPUDOZE	IDLEN	DOZEN	ROI	DOE	—	DOZE2	DOZE1	DOZE0	0000 -000	0000 -000
88Dh	OSCCON1	—	NOSC<2:0>			NDIV<3:0>				-qqq 0000	-qqq 0000
88Eh	OSCCON2	—	COSC<2:0>			CDIV<3:0>				-qqq qqqq	-qqq qqqq
88Fh	OSCCON3	CSWHOLD	SOSCPWR	—	ORDY	NOSCR	—	—	—	00-- 00--	00-- 00--
890h	OSCSTAT	EXTOR	HFOR	MFOR	LFOR	SOR	ADOR	—	PLLR	q000 qq-0	qqqq qq-q
891h	OSCEN	EXTOEN	HFOEN	MFOEN	LFOEN	SOSCEN	ADOEN	—	—	0000 00--	0000 00--
892h	OSCTUNE	—	—	HFTUN<5:0>						--00 0000	--00 0000
893h	OSCFRQ	—	—	—	—	—	HFFRQ<2:0>			---- -qqq	---- -qqq
894h	ACTCON	ACTEN	ACTUD	—	—	ACTLOCK	—	ACTORS	—	00-- 0-0-	00-- 0-0-
895h	—	Unimplemented								---- ----	---- ----
896h	—	Unimplemented								---- ----	---- ----
897h	—	Unimplemented								---- ----	---- ----
898h	—	Unimplemented								---- ----	---- ----
899h	—	Unimplemented								---- ----	---- ----
89Ah	—	Unimplemented								---- ----	---- ----
89Bh	—	Unimplemented								---- ----	---- ----
89Ch	—	Unimplemented								---- ----	---- ----
89Dh	—	Unimplemented								---- ----	---- ----
89Eh	—	Unimplemented								---- ----	---- ----
89Fh	—	Unimplemented								---- ----	---- ----

Legend: x = unknown, u = unchanged, q = depends on condition, - = unimplemented, read as '0', r = reserved. Shaded locations unimplemented, read as '0'.

Note 1: Unimplemented data memory locations, read as '0'.

© 2017-2019 Microchip Technology Inc.

TABLE 4-12: SPECIAL FUNCTION REGISTER SUMMARY BANKS 0-63 PIC16(L)F19155/56/75/76/85/86 (CONTINUED)

Address	Name	Bit 7	Bit 6	Bit 5	Bit 4	Bit 3	Bit 2	Bit 1	Bit 0	Value on: POR, BOR	Value on: MCLR
Bank 18											
CPU CORE REGISTERS; see Table 4-3 for specifics											
90Ch	FVRCON	FVREN	FVRRDY	TSEN	TSRNG	CDAFVR<1:0>		ADFVR<1:0>		0x00 xxxx	0q00 uuuu
90Dh	—	Unimplemented								---- ----	---- ----
90Eh	DAC1CON0	EN	—	OE1	OE2	DAC1PSS<1:0>		—	—	0-00 00--	0-00 00--
90Fh	DAC1CON1	—	—	—	DAC1R<4:0>					---x xxxx	---u uuuu
90Fh		—	—	—	DAC1R4	DAC1R3	DAC1R2	DAC1R1	DAC1R0	---x xxxx	---u uuuu
910h	—	Unimplemented								---- ----	---- ----
911h	—	Unimplemented								---- ----	---- ----
912h	—	Unimplemented								---- ----	---- ----
913h	—	Unimplemented								---- ----	---- ----
914h	—	Unimplemented								---- ----	---- ----
915h	—	Unimplemented								---- ----	---- ----
916h	—	Unimplemented								---- ----	---- ----
917h	—	Unimplemented								---- ----	---- ----
918h	—	Unimplemented								---- ----	---- ----
919h	—	Unimplemented								---- ----	---- ----
91Ah	—	Unimplemented								---- ----	---- ----
91Bh	—	Unimplemented								---- ----	---- ----
91Ch	—	Unimplemented								---- ----	---- ----
91Dh	—	Unimplemented								---- ----	---- ----
91Eh	—	Unimplemented								---- ----	---- ----
91Fh	ZCDCON	ZCDSEN	—	ZCDOUT	ZCDPOL	—	—	ZCDINTP	ZCDINTN	0-x0 --00	0-x0 --00

Legend: x = unknown, u = unchanged, q = depends on condition, - = unimplemented, read as '0', r = reserved. Shaded locations unimplemented, read as '0'.

Note 1: Unimplemented data memory locations, read as '0'.

© 2017-2019 Microchip Technology Inc.

TABLE 4-12: SPECIAL FUNCTION REGISTER SUMMARY BANKS 0-63 PIC16(L)F19155/56/75/76/85/86 (CONTINUED)

Address	Name	Bit 7	Bit 6	Bit 5	Bit 4	Bit 3	Bit 2	Bit 1	Bit 0	Value on: POR, BOR	Value on: MCLR
Bank 19											
CPU CORE REGISTERS; see Table 4-3 for specifics											
98Ch	—	Unimplemented								---- ----	---- ----
98Dh	—	Unimplemented								---- ----	---- ----
98Eh	—	Unimplemented								---- ----	---- ----
98Fh	CMOUT	—	—	—	—	—	—	MC2OUT	MC1OUT	---- --00	---- --00
990h	CM1CON0	ON	OUT	—	POL	—	—	HYS	SYNC	00-0 --00	00-0 --00
991h	CM1CON1	—	—	—	—	—	—	INTP	INTN	---- --00	---- --00
992h	CM1NSEL	—	—	—	—	—	NCH<2:0>			---- -000	---- -000
992h		—	—	—	—	—	NCH2	NCH1	NCH0	---- -000	---- -000
993h	CM1PSEL	—	—	—	—	PCH<3:0>				---- 0000	---- 0000
993h		—	—	—	—	—	PCH2	PCH1	PCH0	---- -000	---- -000
994h	CM2CON0	ON	OUT	—	POL	—	—	HYS	SYNC	00-0 --00	00-0 --00
995h	CM2CON1	—	—	—	—	—	—	INTP	INTN	---- --00	---- --00
996h	CM2NSEL	—	—	—	—	—	NCH<2:0>			---- -000	---- -000
996h		—	—	—	—	—	NCH2	NCH1	NCH0	---- -000	---- -000
997h	CM2PSEL	—	—	—	—	—	PCH<2:0>			---- -000	---- -000
997h		—	—	—	—	—	PCH2	PCH1	PCH0	---- -000	---- -000
998h	—	Unimplemented								---- ----	---- ----
999h	—	Unimplemented								---- ----	---- ----
99Ah	—	Unimplemented								---- ----	---- ----
99Bh	—	Unimplemented								---- ----	---- ----
99Ch	—	Unimplemented								---- ----	---- ----
99Dh	—	Unimplemented								---- ----	---- ----
99Eh	—	Unimplemented								---- ----	---- ----
99Fh	—	Unimplemented								---- ----	---- ----

Legend: x = unknown, u = unchanged, q = depends on condition, - = unimplemented, read as '0', r = reserved. Shaded locations unimplemented, read as '0'.

Note 1: Unimplemented data memory locations, read as '0'.

© 2017-2019 Microchip Technology Inc.

TABLE 4-12: SPECIAL FUNCTION REGISTER SUMMARY BANKS 0-63 PIC16(L)F19155/56/75/76/85/86 (CONTINUED)

Address	Name	Bit 7	Bit 6	Bit 5	Bit 4	Bit 3	Bit 2	Bit 1	Bit 0	Value on: POR, BOR	Value on: MCLR
Bank 20											
CPU CORE REGISTERS; see Table 4-3 for specifics											
A0Ch	—	Unimplemented								---- ----	---- ----
A0Dh	—	Unimplemented								---- ----	---- ----
A0Eh	—	Unimplemented								---- ----	---- ----
A0Fh	—	Unimplemented								---- ----	---- ----
A10h	—	Unimplemented								---- ----	---- ----
A11h	—	Unimplemented								---- ----	---- ----
A12h	—	Unimplemented								---- ----	---- ----
A13h	—	Unimplemented								---- ----	---- ----
A14h	—	Unimplemented								---- ----	---- ----
A15h	—	Unimplemented								---- ----	---- ----
A16h	—	Unimplemented								---- ----	---- ----
A17h	—	Unimplemented								---- ----	---- ----
A18h	—	Unimplemented								---- ----	---- ----
A19h	RC2REG	RC2REG								0000 0000	0000 0000
A1Ah	TX2REG	TX2REG								0000 0000	0000 0000
A1Bh	SP2BRGL	SP2BRGL								0000 0000	0000 0000
A1Ch	SP2BRGH	SP2BRGH								0000 0000	0000 0000
A1Dh	RC2STA	SPEN	RX9	SREN	CREN	ADDEN	FERR	OERR	RX9D	0000 0000	0000 0000
A1Eh	TX2STA	CSRC	TX9	TXEN	SYNC	SENDB	BRGH	TRMT	TX9D	0000 0010	0000 0010
A1Fh	BAUD2CON	ABDOVF	RCIDL	—	SCKP	BRG16	—	WUE	ABDEN	01-0 0-00	01-0 0-00

Legend: x = unknown, u = unchanged, q = depends on condition, - = unimplemented, read as '0', r = reserved. Shaded locations unimplemented, read as '0'.

Note 1: Unimplemented data memory locations, read as '0'.

© 2017-2019 Microchip Technology Inc.

TABLE 4-12: SPECIAL FUNCTION REGISTER SUMMARY BANKS 0-63 PIC16(L)F19155/56/75/76/85/86 (CONTINUED)

Address	Name	Bit 7	Bit 6	Bit 5	Bit 4	Bit 3	Bit 2	Bit 1	Bit 0	Value on: POR, BOR	Value on: MCLR
Bank 21-23											
CPU CORE REGISTERS; see Table 4-3 for specifics											
A8Ch — A9Fh	—	Unimplemented								---- ----	---- ----
B0Ch — B1Fh	—	Unimplemented								---- ----	---- ----
B8Ch — B9Fh	—	Unimplemented								---- ----	---- ----

Legend: x = unknown, u = unchanged, q = depends on condition, - = unimplemented, read as '0', r = reserved. Shaded locations unimplemented, read as '0'.

Note 1: Unimplemented data memory locations, read as '0'.

© 2017-2019 Microchip Technology Inc.

TABLE 4-12: SPECIAL FUNCTION REGISTER SUMMARY BANKS 0-63 PIC16(L)F19155/56/75/76/85/86 (CONTINUED)

Address	Name	Bit 7	Bit 6	Bit 5	Bit 4	Bit 3	Bit 2	Bit 1	Bit 0	Value on: POR, BOR	Value on: MCLR
Bank 24											
CPU CORE REGISTERS; see Table 4-3 for specifics											
C0Ch	RTCCON	RTCEN	—	RTCWREN	RTCSYNC	HALFSEC	—	RTCCLKSEL<1:0>		0-00 0-00	u-uu u-uu
C0Dh	RTCCAL	CAL								0000 0000	uuuu uuuu
C0Eh	ALRMCON	ALRMEN	CHIME	AMASK<3:0>				—	—	0000 00--	000000--
C0Fh	ALRMRPT	ARPT								0000 0000	0000 0000
C10h	YEAR	YEARH<3:0>				YEARL<3:0>				xxxx xxxx	xxxx xxxx
C11h	MONTH	—	—	—	MONTHH	MONTHL<3:0>				---- xxxx	---- xxxx
C12h	WEEKDAY	—	—	—	—	—	WDAY<2:0>			---- -xxx	---- -xxx
C13h	DAY	—	—	DAYH<1:0>		DAYL<3:0>				--xx xxxx	--xx xxxx
C14h	HOURS	—	—	HRH<1:0>		HRL<3:0>				--xx xxxx	--xx xxxx
C15h	MINUTES	—	MINH<2:0>			MINL<3:0>				-xxx xxxx	-xxx xxxx
C16h	SECONDS	—	SECH<2:0>			SECL<3:0>				-xxx xxxx	-xxx xxxx
C17h	ALRMMTH	—	—	—	ALRMHMONTH	ALRMLMONTH <3:0>				---x xxxx	---x xxxx
C18h	ALRMWD	—	—	—	—	—	ALRMLWDAY<2:0>			---- -xxx	---- -xxx
C19h	ALRMDAY	—	—	ALRMHDAY<1:0>		ALRMLDAY<3:0>				--xx xxxx	--xx xxxx
C1Ah	ALRMHR	—	—	ALRMHHR<1:0>		ALRMLHR<3:0>				--xx xxxx	--xx xxxx
C1Bh	ALRMMIN	—	ALRMHMIN<2:0>			ALRMLMIN<3:0>				-xxx xxxx	-xxx xxxx
C1Ch	ALRMSEC	—	ALRMHSEC<2:0>			ALRMLSEC<3:0>				-xxx xxxx	-uuu uuuu
C1Dh	—	Unimplemented								---- ----	---- ----
C1Eh	—	Unimplemented								---- ----	---- ----
C1Fh	—	Unimplemented								---- ----	---- ----

Legend: x = unknown, u = unchanged, q = depends on condition, - = unimplemented, read as '0', r = reserved. Shaded locations unimplemented, read as '0'.

Note 1: Unimplemented data memory locations, read as '0'.

© 2017-2019 Microchip Technology Inc.

TABLE 4-12: SPECIAL FUNCTION REGISTER SUMMARY BANKS 0-63 PIC16(L)F19155/56/75/76/85/86 (CONTINUED)

Address	Name	Bit 7	Bit 6	Bit 5	Bit 4	Bit 3	Bit 2	Bit 1	Bit 0	Value on: POR, BOR	Value on: MCLR
Banks 25-28											
CPU CORE REGISTERS; see Table 4-3 for specifics											
C8Ch — C9Fh	—	Unimplemented								---- ----	---- ----
D0Ch — D1Fh	—	Unimplemented								---- ----	---- ----
D8Ch — D9Fh	—	Unimplemented								---- ----	---- ----
E0Ch — E1Fh	—	Unimplemented								---- ----	---- ----

Legend: x = unknown, u = unchanged, q = depends on condition, - = unimplemented, read as '0', r = reserved. Shaded locations unimplemented, read as '0'.

Note 1: Unimplemented data memory locations, read as '0'.

© 2017-2019 Microchip Technology Inc.

TABLE 4-12: SPECIAL FUNCTION REGISTER SUMMARY BANKS 0-63 PIC16(L)F19155/56/75/76/85/86 (CONTINUED)

Address	Name	Bit 7	Bit 6	Bit 5	Bit 4	Bit 3	Bit 2	Bit 1	Bit 0	Value on: POR, BOR	Value on: MCLR
Bank 29											
CPU CORE REGISTERS; see Table 4-3 for specifics											
E8Ch	VB0GPR	VB0GPR								0000 0000	uuuu uuuu
E8Dh	VB1GPR	VB1GPR								0000 0000	uuuu uuuu
E8Eh	VB2GPR	VB2GPR								0000 0000	uuuu uuuu
E8Fh	VB3GPR	VB3GPR								0000 0000	uuuu uuuu
E90h	—	Unimplemented								---- ----	---- ----
E91h	—	Unimplemented								---- ----	---- ----
E92h	—	Unimplemented								---- ----	---- ----
E93h	—	Unimplemented								---- ----	---- ----
E94h	—	Unimplemented								---- ----	---- ----
E95h	—	Unimplemented								---- ----	---- ----
E96h	—	Unimplemented								---- ----	---- ----
E97h	—	Unimplemented								---- ----	---- ----
E98h	—	Unimplemented								---- ----	---- ----
E99h	—	Unimplemented								---- ----	---- ----
E9Ah	—	Unimplemented								---- ----	---- ----
E9Bh	—	Unimplemented								---- ----	---- ----
E9Ch	—	Unimplemented								---- ----	---- ----
E9Dh	—	Unimplemented								---- ----	---- ----
E9Eh	—	Unimplemented								---- ----	---- ----
E9Fh	—	Unimplemented								---- ----	---- ----

Legend: x = unknown, u = unchanged, q = depends on condition, - = unimplemented, read as '0', r = reserved. Shaded locations unimplemented, read as '0'.

Note 1: Unimplemented data memory locations, read as '0'.

© 2017-2019 Microchip Technology Inc.

TABLE 4-12: SPECIAL FUNCTION REGISTER SUMMARY BANKS 0-63 PIC16(L)F19155/56/75/76/85/86 (CONTINUED)

Address	Name	Bit 7	Bit 6	Bit 5	Bit 4	Bit 3	Bit 2	Bit 1	Bit 0	Value on: POR, BOR	Value on: MCLR
Banks 30-57											
CPU CORE REGISTERS; see Table 4-3 for specifics											
F0Ch — 1C9Fh	—	Unimplemented								---- ----	---- ----

Legend: x = unknown, u = unchanged, q = depends on condition, - = unimplemented, read as '0', r = reserved. Shaded locations unimplemented, read as '0'.

Note 1: Unimplemented data memory locations, read as '0'.

© 2017-2019 Microchip Technology Inc.

TABLE 4-12: SPECIAL FUNCTION REGISTER SUMMARY BANKS 0-63 PIC16(L)F19155/56/75/76/85/86 (CONTINUED)

Address	Name	Bit 7	Bit 6	Bit 5	Bit 4	Bit 3	Bit 2	Bit 1	Bit 0	Value on: POR, BOR	Value on: MCLR
Bank 58											
CPU CORE REGISTERS; see Table 4-3 for specifics											
1D0Ch	LCDCON	LCDEN	SLPEN	WERR	CS	LMUX<3:0>				0000 0000	0000 0000
1D0Dh	LCDPS	WFT	—	LCDA	WA	LP<3:0>				0-00 0000	0-000000
1D0Eh	LCDSE0	SE07	SE06	SE05	SE04	SE03	SE02	SE01	SE00	0000 0000	0000 0000
1D0Fh	LCDSE1	SE15	SE14	SE13	SE12	SE11	SE10	SE09	SE08	0000 0000	0000 0000
1D10h	LCDSE2	SE23	SE22	SE21	SE20	SE19	SE18	SE17	SE16	0000 0000	0000 0000
1D11h	LCDSE3	SE31	SE30	SE29	SE28	SE27	SE26	SE25	SE24	0000 0000	0000 0000
1D12h	LCDSE4	SE39	SE38	SE37	SE36	SE35	SE34	SE33	SE32	0000 0000	0000 0000
1D13h	LCDSE5	SE47	SE46	SE45	SE44	SE43	SE42	SE41	SE40	0000 0000	0000 0000
1D14h	LCDVCON1	LPEN	EN5V	—	—	—	BIAS<2:0>			00-- -000	xx-- -000
1D15h	LCDVCON2	—	—	—	—	LCDVSRC3	LCDVSRC2	LCDVSRC1	LCDVSRC0	---0 0000	---0 0000
1D16h	LCDREF	—	—	—	—	—	LCDCST<2:0>			---- -000	---- -000
1D17h	LCDRL	LRLAP<1:0>		LRLBP<1:0>		LCDIRI	LRLAT<2:0>			0000 0000	0000 0000
1D18h	LCDDATA0	S07C0	S06C0	—	S04C0	S03C0	S02C0	S01C0	S00C0	00-0 0000	00-0 0000
1D19h	LCDDATA1	S15C0	S14C0	S13C0	—	S11C0	S10C0	S09C0	S08C0	000- 0000	000- 0000
1D1Ah	LCDDATA2	S23C0	S22C0	—	S20C0	S19C0	S18C0	—	—	00-0 00--	00-0 00--
1D1Bh	LCDDATA3	S31C0	S30C0	S29C0	S28C0	S27C0	S26C0	S25C0	S24C0	0000 0000	0000 0000
1D1Ch	LCDDATA4	—	—	—	—	—	S34C0	S33C0	S32C0	---- -000	---- -000
1D1Dh	LCDDATA5	S47C0	S46C0	S45C0	S44C0	S43C0	S42C0	S41C0	S40C0	0000 0000	0000 0000
1D1Eh	LCDDATA6	S07C1	S06C1	—	S04C1	S03C1	S02C1	S01C1	S00C1	00-0 0000	00-0 0000
1D1Fh	LCDDATA7	S15C1	S14C1	S13C1	—	S11C1	S10C1	S09C1	S08C1	000- 0000	000- 0000
1D20h	LCDDATA8	S23C1	S22C1	—	S20C1	S19C1	S18C1	—	—	00-0 00--	00-0 00--
1D21h	LCDDATA9	S31C1	S30C1	S29C1	S28C1	S27C1	S26C1	S25C1	S24C1	0000 0000	0000 0000
1D22h	LCDDATA10	—	—	—	—	—	S34C1	S33C1	S32C1	---- -000	---- -000
1D23h	LCDDATA11	S47C1	S46C1	S45C1	S44C1	S43C1	S42C1	S41C1	S40C1	0000 0000	0000 0000
1D24h	LCDDATA12	S07C2	S06C2	—	S04C2	S3C2	S2C2	S01C2	S00C2	00-0 0000	00-0 0000
1D25h	LCDDATA13	S15C2	S14C2	S13C2	—	S11C2	S10C2	S09C2	S08C2	000- 0000	000- 0000
1D26h	LCDDATA14	S23C2	S22C2	—	S20C2	S19C2	S18C2	—	—	00-0 00--	00-0 00--
1D27h	LCDDATA15	S31C2	S30C2	S29C2	S28C2	S27C2	S26C2	S25C2	S24C2	0000 0000	0000 0000
1D28h	LCDDATA16	—	—	—	—	—	S34C2	S33C2	S32C2	---- -000	---- -000
1D29h	LCDDATA17	S47C2	S46C2	S45C2	S44C2	S43C2	S42C2	S41C2	S40C2	0000 0000	0000 0000

© 2017-2019 Microchip Technology Inc.

TABLE 4-12: SPECIAL FUNCTION REGISTER SUMMARY BANKS 0-63 PIC16(L)F19155/56/75/76/85/86 (CONTINUED)

Address	Name	Bit 7	Bit 6	Bit 5	Bit 4	Bit 3	Bit 2	Bit 1	Bit 0	Value on: POR, BOR	Value on: MCLR
Bank 58 (continued)											
1D2Ah	LCDDATA18	S15C3	S14C3	S13C3	—	SE11C3	S10C3	S09C3	S08C3	000- 0000	000- 0000
1D2Bh	LCDDATA19	S23C3	S22C3	—	S20C3	S19C3	S18C3	—	—	00-0 00--	00-0 00--
1D2Ch	LCDDATA20	S31C3	S30C3	S29C3	S28C3	S27C3	S26C3	S25C3	S24C3	0000 0000	0000 0000
1D2Dh	LCDDATA21	—	—	—	—	—	S34C3	S33C3	S32C3	---- -000	---- -000
1D2Eh	LCDDATA22	S47C3	S46C3	S45C3	S44C3	S43C3	S42C3	S41C3	S40C3	0000 0000	0000 0000
1D2Fh	LCDDATA23	S07C4	S06C4	—	S04C4	S03C4	S02C4	S01C4	S00C4	00-0 0000	00-0 0000
1D30h	LCDDATA24	S15C4	S14C4	S13C4	—	S11C4	S10C4	S09C4	S08C4	000- 0000	000- 0000
1D31h	LCDDATA25	S23C4	S22C4	—	S20C4	S19C4	S18C4	—	—	00-0 00--	00-0 00--
1D32h	LCDDATA26	S31C4	S30C4	S29C4	S28C4	S27C4	S26C4	S25C4	S24C4	0000 0000	0000 0000
1D33h	LCDDATA27	—	—	—	—	—	S34C4	S33C4	S32C4	---- -000	---- -000
1D34h	LCDDATA28	S47C4	S46C4	S45C4	S44C4	S43C4	S42C4	S41C4	S40C4	0000 0000	0000 0000
1D35h	LCDDATA29	S07C5	S06C5	—	S04C5	S03C5	S02C5	S01C5	S00C5	00-0 0000	00-0 0000
1D36h	LCDDATA30	S15C5	S14C5	S13C5	—	S11C5	S10C5	S09C5	S08C5	000- 0000	000- 0000
1D37h	LCDDATA31	S23C5	S22C5	—	S20C5	S19C5	S18C5	—	—	00-0 00--	00-0 00--
1D38h	LCDDATA32	S31C5	S30C5	S29C5	S28C5	S27C5	S26C5	S25C5	S24C5	0000 0000	0000 0000
1D39h	LCDDATA33	—	—	—	—	—	S34C5	S33C5	S32C5	---- -000	---- -000
1D3Ah	LCDDATA34	S47C5	S46C5	S45C5	S44C5	S43C5	S42C5	S41C5	S40C5	0000 0000	0000 0000
1D3Bh	LCDDATA35	S07C6	S06C6	—	S04C6	S03C6	S02C6	S01C6	S00C6	00-0 0000	00-0 0000
1D3Ch	LCDDATA36	S15C6	S14C6	S13C6	—	S11C6	S10C6	S09C6	S08C6	000- 0000	000- 0000
1D3Dh	LCDDATA37	S23C6	S22C6	—	S20C6	S19C6	S18C6	—	—	00-0 00--	00-0 00--
1D3Eh	LCDDATA38	S31C6	S30C6	S29C6	S28C6	S27C6	S26C6	S25C6	S24C6	0000 0000	0000 0000
1D3Fh	LCDDATA39	—	—	—	—	—	S34C6	S33C6	S32C6	---- -000	---- -000
1D40h	LCDDATA40	S47C6	S46C6	S45C6	S44C6	S43C6	S42C6	S41C6	S40C6	0000 0000	0000 0000
1D41h	LCDDATA41	S07C7	S06C7	—	S04C7	S03C7	S02C7	S01C7	S00C7	00-0 0000	00-0 0000
1D42h	LCDDATA42	S15C7	S14C7	S13C7	—	S11C7	S10C7	S09C7	S08C7	000- 0000	000- 0000
1D43h	LCDDATA43	S23C7	S22C7	—	S20C7	S19C7	S18C7	—	—	00-0 00--	00-0 00--
1D44h	LCDDATA44	S31C7	S30C7	S29C7	S28C7	S27C7	S26C7	S25C7	S24C7	0000 0000	0000 0000
1D45h	LCDDATA45	—	—	—	—	—	S34C7	S33C7	S32C7	---- -000	---- -000
1D46h	LCDDATA46	S47C7	S46C7	S45C7	S44C7	S43C7	S42C7	S41C7	S40C7	0000 0000	0000 0000
1D47h	LCDDATA47	S07C0	S06C0	—	S04C0	S03C0	S02C0	S01C0	S00C0	00-0 0000	00-0 0000

© 2017-2019 Microchip Technology Inc.

TABLE 4-12: SPECIAL FUNCTION REGISTER SUMMARY BANKS 0-63 PIC16(L)F19155/56/75/76/85/86 (CONTINUED)

Address	Name	Bit 7	Bit 6	Bit 5	Bit 4	Bit 3	Bit 2	Bit 1	Bit 0	Value on: POR, BOR	Value on: MCLR
Bank 58 (continued)											
1D48h — 1D6Fh	—	Unimplemented								---- ----	---- ----

Legend: x = unknown, u = unchanged, q = depends on condition, - = unimplemented, read as '0', r = reserved. Shaded locations unimplemented, read as '0'.

Note 1: Unimplemented data memory locations, read as '0'.

© 2017-2019 Microchip Technology Inc.

TABLE 4-12: SPECIAL FUNCTION REGISTER SUMMARY BANKS 0-63 PIC16(L)F19155/56/75/76/85/86 (CONTINUED)

Address	Name	Bit 7	Bit 6	Bit 5	Bit 4	Bit 3	Bit 2	Bit 1	Bit 0	Value on: POR, BOR	Value on: MCLR
Bank 59											
CPU CORE REGISTERS; see Table 4-3 for specifics											
1D8Ch — 1D9Fh	—	Unimplemented								---- ----	---- ----

Legend: x = unknown, u = unchanged, q = depends on condition, - = unimplemented, read as '0', r = reserved. Shaded locations unimplemented, read as '0'.

Note 1: Unimplemented data memory locations, read as '0'.

© 2017-2019 Microchip Technology Inc.

TABLE 4-12: SPECIAL FUNCTION REGISTER SUMMARY BANKS 0-63 PIC16(L)F19155/56/75/76/85/86 (CONTINUED)

Address	Name	Bit 7	Bit 6	Bit 5	Bit 4	Bit 3	Bit 2	Bit 1	Bit 0	Value on: POR, BOR	Value on: MCLR
Bank 60											
CPU CORE REGISTERS; see Table 4-3 for specifics											
1E0Ch	—	Unimplemented								---- ----	---- ----
1E0Dh	—	Unimplemented								---- ----	---- ----
1E0Eh	—	Unimplemented								---- ----	---- ----
1E0Fh	CLCDATA	—	—	—	—	MLC4OUT	MLC3OUT	MLC2OUT	MLC1OUT	---- 0000	---- 0000
1E10h	CLC1CON	LC1EN	—	LC1OUT	LC1INTP	LC1INTN	LC1MODE<2:0>			0-000000	0-000000
1E11h	CLC1POL	LC1POL	—	—	—	LC1G4POL	LC1G3POL	LC1G2POL	LC1G1POL	0--- xxxx	0--- uuuu
1E12h	CLC1SEL0	—	—	LC1D1S<5:0>						--xx xxxx	--uu uuuu
1E13h	CLC1SEL1	—	—	LC1D2S<5:0>						--xx xxxx	--uu uuuu
1E14h	CLC1SEL2	—	—	LC1D3S<5:0>						--xx xxxx	--uu uuuu
1E15h	CLC1SEL3	—	—	LC1D4S<5:0>						--xx xxxx	--uu uuuu
1E16h	CLC1GLS0	LC1G1D4T	LC1G1D4N	LC1G1D3T	LC1G1D3N	LC1G1D2T	LC1G1D2N	LC1G1D1T	LC1G1D1N	xxxx xxxx	uuuu uuuu
1E17h	CLC1GLS1	LC1G2D4T	LC1G2D4N	LC1G2D3T	LC1G2D3N	LC1G2D2T	LC1G2D2N	LC1G2D1T	LC1G2D1N	xxxx xxxx	uuuu uuuu
1E18h	CLC1GLS2	LC1G3D4T	LC1G3D4N	LC1G3D3T	LC1G3D3N	LC1G3D2T	LC1G3D2N	LC1G3D1T	LC1G3D1N	xxxx xxxx	uuuu uuuu
1E19h	CLC1GLS3	LC1G4D4T	LC1G4D4N	LC1G4D3T	LC1G4D3N	LC1G4D2T	LC1G4D2N	LC1G4D1T	LC1G4D1N	xxxx xxxx	uuuu uuuu
1E1Ah	CLC2CON	LC2EN	—	LC2OUT	LC2INTP	LC2INTN	LC2MODE<2:0>			0-00 0000	0-00 0000
1E1Bh	CLC2POL	LC2POL	—	—	—	LC2G4POL	LC2G3POL	LC2G2POL	LC2G1POL	0--- xxxx	0--- uuuu
1E1Ch	CLC2SEL0	—	—	LC2D1S<5:0>						--xx xxxx	--uu uuuu
1E1Dh	CLC2SEL1	—	—	LC2D2S<5:0>						--xx xxxx	--uu uuuu
1E1Eh	CLC2SEL2	—	—	LC2D3S<5:0>						--xx xxxx	--uu uuuu
1E1Fh	CLC2SEL3	—	—	LC2D4S<5:0>						--xx xxxx	--uu uuuu
1E20h	CLC2GLS0	LC2G1D4T	LC1G1D4N	LC2G1D3T	LC2G1D3N	LC2G1D2T	LC2G1D2N	LC2G1D1T	LC2G1D1N	xxxx xxxx	uuuu uuuu
1E21h	CLC2GLS1	LC2G2D4T	LC1G2D4N	LC2G2D3T	LC2G2D3N	LC2G2D2T	LC2G2D2N	LC2G2D1T	LC2G2D1N	xxxx xxxx	uuuu uuuu

Legend: x = unknown, u = unchanged, q = depends on condition, - = unimplemented, read as '0', r = reserved. Shaded locations unimplemented, read as '0'.

Note 1: Unimplemented data memory locations, read as '0'.

© 2017-2019 Microchip Technology Inc.

TABLE 4-12: SPECIAL FUNCTION REGISTER SUMMARY BANKS 0-63 PIC16(L)F19155/56/75/76/85/86 (CONTINUED)

Address	Name	Bit 7	Bit 6	Bit 5	Bit 4	Bit 3	Bit 2	Bit 1	Bit 0	Value on: POR, BOR	Value on: MCLR
Bank 60 (Continued)											
1E22h	CLC2GLS2	LC2G3D4T	LC1G3D4N	LC2G3D3T	LC2G3D3N	LC2G3D2T	LC2G3D2N	LC2G3D1T	LC2G3D1N	xxxx xxxx	uuuu uuuu
1E23h	CLC2GLS3	LC2G4D4T	LC1G4D4N	LC2G4D3T	LC2G4D3N	LC2G4D2T	LC2G4D2N	LC2G4D1T	LC2G4D1N	xxxx xxxx	uuuu uuuu
1E24h	CLC3CON	LC3EN	—	LC3OUT	LC3INTP	LC3INTN	LC3MODE<2:0>			0-00 0000	0-00 0000
1E25h	CLC3POL	LC3POL	—	—	—	LC3G4POL	LC3G3POL	LC3G2POL	LC3G1POL	0--- xxxx	0--- uuuu
1E26h	CLC3SEL0	—	—	LC3D1S						--xx xxxx	--uu uuuu
1E27h	CLC3SEL1	—	—	LC3D2S						--xx xxxx	--uu uuuu
1E28h	CLC3SEL2	—	—	LC3D3S						--xx xxxx	--uu uuuu
1E29h	CLC3SEL3	—	—	LC3D4S						--xx xxxx	--uu uuuu
1E2Ah	CLC3GLS0	LC3G1D4T	LC3G1D4N	LC3G1D3T	LC3G1D3N	LC3G1D2T	LC3G1D2N	LC3G1D1T	LC3G1D1N	xxxx xxxx	uuuu uuuu
1E2Bh	CLC3GLS1	LC3G2D4T	LC3G2D4N	LC3G2D3T	LC3G2D3N	LC3G2D2T	LC3G2D2N	LC3G2D1T	LC3G2D1N	xxxx xxxx	uuuu uuuu
1E2Ch	CLC3GLS2	LC3G3D4T	LC3G3D4N	LC3G3D3T	LC3G3D3N	LC3G3D2T	LC3G3D2N	LC3G3D1T	LC3G3D1N	xxxx xxxx	uuuu uuuu
1E2Dh	CLC3GLS3	LC3G4D4T	LC3G4D4N	LC3G4D3T	LC3G4D3N	LC3G4D2T	LC3G4D2N	LC3G4D1T	LC3G4D1N	xxxx xxxx	uuuu uuuu
1E2Eh	CLC4CON	LC4EN	—	LC4OUT	LC4INTP	LC4INTN	LC4MODE<2:0>			0-00 0000	0-00 0000
1E2Fh	CLC4POL	LC4POL	—	—	—	LC4G4POL	LC4G3POL	LC4G2POL	LC4G1POL	0--- xxxx	0--- uuuu
1E30h	CLC4SEL0	—	—	LC4D1S<5:0>						--xx xxxx	--uu uuuu
1E31h	CLC4SEL1	—	—	LC4D2S<5:0>						--xx xxxx	--uu uuuu
1E32h	CLC4SEL2	—	—	LC4D3S<5:0>						--xx xxxx	--uu uuuu
1E33h	CLC4SEL3	—	—	LC4D4S<5:0>						--xx xxxx	--uu uuuu
1E34h	CLC4GLS0	LC4G1D4T	LC4G1D4N	LC4G1D3T	LC4G1D3N	LC4G1D2T	LC4G1D2N	LC4G1D1T	LC4G1D1N	xxxx xxxx	uuuu uuuu
1E35h	CLC4GLS1	LC4G2D4T	LC4G2D4N	LC4G2D3T	LC4G2D3N	LC4G2D2T	LC4G2D2N	LC4G2D1T	LC4G2D1N	xxxx xxxx	uuuu uuuu
1E36h	CLC4GLS2	LC4G3D4T	LC4G3D4N	LC4G3D3T	LC4G3D3N	LC4G3D2T	LC4G3D2N	LC4G3D1T	LC4G3D1N	xxxx xxxx	uuuu uuuu

Legend: x = unknown, u = unchanged, q = depends on condition, - = unimplemented, read as '0', r = reserved. Shaded locations unimplemented, read as '0'.

Note 1: Unimplemented data memory locations, read as '0'.

© 2017-2019 Microchip Technology Inc.

TABLE 4-12: SPECIAL FUNCTION REGISTER SUMMARY BANKS 0-63 PIC16(L)F19155/56/75/76/85/86 (CONTINUED)

Address	Name	Bit 7	Bit 6	Bit 5	Bit 4	Bit 3	Bit 2	Bit 1	Bit 0	Value on: POR, BOR	Value on: MCLR
Bank 60 (Continued)											
1E37h	CLC4GLS3	LC4G4D4T	LC4G4D4N	LC4G4D3T	LC4G4D3N	LC4G4D2T	LC4G4D2N	LC4G4D1T	LC4G4D1N	xxxx xxxx	uuuu uuuu
1E38h	RF0PPS(3)	—	—	—	RF0PPS4	RF0PPS3	RF0PPS2	RF0PPS1	RF0PPS0	---x xxxx	---u uuuu
1E39h	RF1PPS(3)	—	—	—	RF1PPS4	RF1PPS3	RF1PPS2	RF1PPS1	RF1PPS0	---x xxxx	---u uuuu
1E3Ah	RF2PPS(3)	—	—	—	RF2PPS4	RF2PPS3	RF2PPS2	RF2PPS1	RF2PPS0	---x xxxx	---u uuuu
1E3Bh	RF3PPS(3)	—	—	—	RF3PPS4	RF3PPS3	RF3PPS2	RF3PPS1	RF3PPS0	---x xxxx	---u uuuu
1E3Ch	RF4PPS(3)	—	—	—	RF4PPS4	RF4PPS3	RF4PPS2	RF4PPS1	RF4PPS0	---x xxxx	---u uuuu
1E3Dh	RF5PPS(3)	—	—	—	RF5PPS4	RF5PPS3	RF5PPS2	RF5PPS1	RF5PPS0	---x xxxx	---u uuuu
1E3Eh	RF6PPS(3)	—	—	—	RF6PPS4	RF6PPS3	RF6PPS2	RF6PPS1	RF6PPS0	---x xxxx	---u uuuu
1E3Fh	RF7PPS(3)	—	—	—	RF7PPS4	RF7PPS3	RF7PPS2	RF7PPS1	RF7PPS0	---x xxxx	---u uuuu
1E40h	—	Unimplemented								---- ----	---- ----
1E41h	—	Unimplemented								---- ----	---- ----
1E42h	—	Unimplemented								---- ----	---- ----
1E43h	—	Unimplemented								---- ----	---- ----
1E44h	—	Unimplemented								---- ----	---- ----
1E45h	—	Unimplemented								---- ----	---- ----
1E46h	—	Unimplemented								---- ----	---- ----
1E47h	—	Unimplemented								---- ----	---- ----
1E48h	—	Unimplemented								---- ----	---- ----
1E49h	—	Unimplemented								---- ----	---- ----
1E4Ah	—	Unimplemented								---- ----	---- ----
1E4Bh	—	Unimplemented								---- ----	---- ----
1E4Ch	—	Unimplemented								---- ----	---- ----
1E4Dh	—	Unimplemented								---- ----	---- ----
1E4Eh	—	Unimplemented								---- ----	---- ----
1E4Fh	—	Unimplemented								---- ----	---- ----

Legend: x = unknown, u = unchanged, q = depends on condition, - = unimplemented, read as '0', r = reserved. Shaded locations unimplemented, read as '0'.

Note 1: Unimplemented data memory locations, read as '0'.
2: Present only on PIC16(L)F19175/76/85/86.
3: Present only on PIC16(L)F19185/86.

© 2017-2019 Microchip Technology Inc.

TABLE 4-12: SPECIAL FUNCTION REGISTER SUMMARY BANKS 0-63 PIC16(L)F19155/56/75/76/85/86 (CONTINUED)

Address	Name	Bit 7	Bit 6	Bit 5	Bit 4	Bit 3	Bit 2	Bit 1	Bit 0	Value on: POR, BOR	Value on: MCLR
Bank 60 (Continued)											
1E50h	ANSELF(3)	ANSF7	ANSF6	ANSF5	ANSF4	ANSF3	ANSF2	ANSF1	ANSF0	1111 1111	1111 1111
1E51h	WPUF(3)	WPUF7	WPUF6	WPUF5	WPUF4	WPUF3	WPUF2	WPUF1	WPUF0	0000 0000	0000 0000
1E52h	ODCONF(3)	ODCF7	ODCF6	ODCF5	ODCF4	ODCF3	ODCF2	ODCF1	ODCF0	0000 0000	0000 0000
1E53h	SLRCONF(3)	SLRF7	SLRF6	SLRF5	SLRF4	SLRF3	SLRF2	SLRF1	SLRF0	1111 1111	1111 1111
1E54h	INLVLF(3)	INLVLF7	INLVLF6	INLVLF5	INLVLF4	INLVLF3	INLVLF2	INLVLF1	INLVLF0	1111 1111	1111 1111
1E55h	—	Unimplemented								---- ----	---- ----
1E56h	—	Unimplemented								---- ----	---- ----
1E57h	—	Unimplemented								---- ----	---- ----
1E58h	—	Unimplemented								---- ----	---- ----
1E59h	—	Unimplemented								---- ----	---- ----
1E5Ah	—	Unimplemented								---- ----	---- ----
1E5Bh	—	Unimplemented								---- ----	---- ----
1E5Ch	—	Unimplemented								---- ----	---- ----
1E5Dh	—	Unimplemented								---- ----	---- ----
1E5Eh	—	Unimplemented								---- ----	---- ----
1E5Fh	—	Unimplemented								---- ----	---- ----
1E60h	—	Unimplemented								---- ----	---- ----
1E61h	—	Unimplemented								---- ----	---- ----
1E62h	—	Unimplemented								---- ----	---- ----
1E63h	—	Unimplemented								---- ----	---- ----
1E64h	—	Unimplemented								---- ----	---- ----
1E65h	—	Unimplemented								---- ----	---- ----
1E66h	—	Unimplemented								---- ----	---- ----
1E67h	—	Unimplemented								---- ----	---- ----
1E68h	—	Unimplemented								---- ----	---- ----
1E69h	—	Unimplemented								---- ----	---- ----
1E6Ah	—	Unimplemented								---- ----	---- ----

Legend: x = unknown, u = unchanged, q = depends on condition, - = unimplemented, read as '0', r = reserved. Shaded locations unimplemented, read as '0'.

Note 1: Unimplemented data memory locations, read as '0'.
2: Present only on PIC16(L)F19175/76/85/86.
3: Present only on PIC16(L)F19185/86.

© 2017-2019 Microchip Technology Inc.

TABLE 4-12: SPECIAL FUNCTION REGISTER SUMMARY BANKS 0-63 PIC16(L)F19155/56/75/76/85/86 (CONTINUED)

Address	Name	Bit 7	Bit 6	Bit 5	Bit 4	Bit 3	Bit 2	Bit 1	Bit 0	Value on: POR, BOR	Value on: MCLR
Bank 60 (Continued)											
1E6Bh	—	Unimplemented								---- ----	---- ----
1E6Ch	—	Unimplemented								---- ----	---- ----
1E6Dh	—	Unimplemented								---- ----	---- ----
1E6Eh	—	Unimplemented								---- ----	---- ----
1E6Fh	—	Unimplemented								---- ----	---- ----

Legend: x = unknown, u = unchanged, q = depends on condition, - = unimplemented, read as '0', r = reserved. Shaded locations unimplemented, read as '0'.

Note 1: Unimplemented data memory locations, read as '0'.

© 2017-2019 Microchip Technology Inc.

TABLE 4-12: SPECIAL FUNCTION REGISTER SUMMARY BANKS 0-63 PIC16(L)F19155/56/75/76/85/86 (CONTINUED)

Address	Name	Bit 7	Bit 6	Bit 5	Bit 4	Bit 3	Bit 2	Bit 1	Bit 0	Value on: POR, BOR	Value on: MCLR
Bank 61											
CPU CORE REGISTERS; see Table 4-3 for specifics											
1E8Ch	—	Unimplemented								---- ----	---- ----
1E8Dh	—	Unimplemented								---- ----	---- ----
1E8Eh	—	Unimplemented								---- ----	---- ----
1E8Fh	PPSLOCK	—	—	—	—	—	—	—	PPSLOCKED	---- ---0	---- ---0
1E90h	INTPPS	—	—	—	INTPPS<4:0>					---0 1000	---u uuuu
1E91h	T0CKIPPS	—	—	—	T0CKIPPS<4:0>					---0 0100	---u uuuu
1E92h	T1CKIPPS	—	—	—	T1CKIPPS<4:0>					---1 0000	---u uuuu
1E93h	T1GPPS	—	—	—	T1GPPS<4:0>					---0 1101	---u uuuu
1E94h	—	Unimplemented								---- ----	---- ----
1E95h	—	Unimplemented								---- ----	---- ----
1E96h	—	Unimplemented								---- ----	---- ----
1E97h	—	Unimplemented								---- ----	---- ----
1E98h	—	Unimplemented								---- ----	---- ----
1E99h	—	Unimplemented								---- ----	---- ----
1E9Ah	—	Unimplemented								---- ----	---- ----
1E9Bh	—	Unimplemented								---- ----	---- ----
1E9Ch	T2INPPS	—	—	—	T2INPPS<4:0>					---0 0001	---u uuuu
1E9Dh	T4INPPS	—	—	—	T4INPPS<4:0>					---0 0100	---u uuuu
1E9Eh	—	Unimplemented								---- ----	---- ----
1E9Fh	—	Unimplemented								---- ----	---- ----
1EA0h	—	Unimplemented								---- ----	---- ----

Legend: x = unknown, u = unchanged, q = depends on condition, - = unimplemented, read as '0', r = reserved. Shaded locations unimplemented, read as '0'.

Note 1: Unimplemented data memory locations, read as '0'.

© 2017-2019 Microchip Technology Inc.

TABLE 4-12: SPECIAL FUNCTION REGISTER SUMMARY BANKS 0-63 PIC16(L)F19155/56/75/76/85/86 (CONTINUED)

Address	Name	Bit 7	Bit 6	Bit 5	Bit 4	Bit 3	Bit 2	Bit 1	Bit 0	Value on: POR, BOR	Value on: MCLR
Bank 61 (Continued)											
1EA1h	CCP1PPS	—	—	—	CCP1PPS<4:0>					---1 0011	---u uuuu
1EA2h	CCP2PPS	—	—	—	CCP2PPS<4:0>					---1 0100	---u uuuu
1EA3h	—	Unimplemented								---- ----	---- ----
1EA4h	—	Unimplemented								---- ----	---- ----
1EA5h	—	Unimplemented								---- ----	---- ----
1EA6h	—	Unimplemented								---- ----	---- ----
1EA7h	—	Unimplemented								---- ----	---- ----
1EA8h	—	Unimplemented								---- ----	---- ----
1EA9h	SMT1WINPPS	—	—	—	SMT1WINPPS<4:0>					---0 0110	---u uuuu
1EAAh	SMT1SIGPPS	—	—	—	SMT1SIGPPS<4:0>					---0 0111	---u uuuu
1EABh	—	Unimplemented								---- ----	---- ----
1EACh	—	Unimplemented								---- ----	---- ----
1EADh	—	Unimplemented								---- ----	---- ----
1EAEh	—	Unimplemented								---- ----	---- ----
1EAFh	—	Unimplemented								---- ----	---- ----
1EB0h	—	Unimplemented								---- ----	---- ----
1EB1h	CWG1PPS	—	—	—	CWG1PPS<4:0>					---1 0010	---u uuuu
1EB2h	—	Unimplemented								---- ----	---- ----
1EB3h	—	Unimplemented								---- ----	---- ----
1EB4h	—	Unimplemented								---- ----	---- ----
1EB5h	—	Unimplemented								---- ----	---- ----
1EB6h	—	Unimplemented								---- ----	---- ----
1EB7h	—	Unimplemented								---- ----	---- ----
1EB8h	—	Unimplemented								---- ----	---- ----
1EB9h	—	Unimplemented								---- ----	---- ----
1EBAh	—	Unimplemented								---- ----	---- ----

Legend: x = unknown, u = unchanged, q = depends on condition, - = unimplemented, read as '0', r = reserved. Shaded locations unimplemented, read as '0'.

Note 1: Unimplemented data memory locations, read as '0'.

© 2017-2019 Microchip Technology Inc.

TABLE 4-12: SPECIAL FUNCTION REGISTER SUMMARY BANKS 0-63 PIC16(L)F19155/56/75/76/85/86 (CONTINUED)

Address	Name	Bit 7	Bit 6	Bit 5	Bit 4	Bit 3	Bit 2	Bit 1	Bit 0	Value on: POR, BOR	Value on: MCLR
Bank 61 (Continued)											
1EBBh	CLCIN0PPS	—	—	—	CLCIN0PPS<4:0>					---0 0000	---u uuuu
1EBCh	CLCIN1PPS	—	—	—	CLCIN1PPS<4:0>					---0 0001	---u uuuu
1EBDh	CLCIN2PPS	—	—	—	CLCIN2PPS<4:0>					---0 1110	---u uuuu
1EBEh	CLCIN3PPS	—	—	—	CLCIN3PPS<4:0>					---0 1111	---u uuuu
1EBFh	—	Unimplemented								---- ----	---- ----
1EC0h	—	Unimplemented								---- ----	---- ----
1EC1h	—	Unimplemented								---- ----	---- ----
1EC2h	—	Unimplemented								---- ----	---- ----
1EC3h	ADCACTPPS	—	—	ADCACTPPS<5:0>						--11 1001	--uu uuuu
1EC4h	—	Unimplemented								---- ----	---- ----
1EC5h	SSP1CLKPPS	—	—	—	SSP1CLKPPS<4:0>					---1 0011	---u uuuu
1EC6h	SSP1DATPPS	—	—	—	SSP1DATPPS<4:0>					---1 0101	---u uuuu
1EC7h	SSP1SSPPS	—	—	—	SSP1SSPPS<4:0>					---0 1111	---u uuuu
1EC8h	—	Unimplemented								---- ----	---- ----
1EC9h	—	Unimplemented								---- ----	---- ----
1ECAh	—	Unimplemented								---- ----	---- ----
1ECBh	RX1PPS	—	—	—	RX1PPS<4:0>					---1 0111	---u uuuu
1ECCh	TX1PPS	—	—	—	TX1PPS<4:0>					---1 0110	---u uuuu
1ECDh	RX2PPS	—	—	—	RX2PPS<4:0>					---1 0010	---u uuuu
1ECEh	TX2PPS	—	—	—	TX2PPS<4:0>					---1 0001	---u uuuu

Legend: x = unknown, u = unchanged, q = depends on condition, - = unimplemented, read as '0', r = reserved. Shaded locations unimplemented, read as '0'.

Note 1: Unimplemented data memory locations, read as '0'.

© 2017-2019 Microchip Technology Inc.

TABLE 4-12: SPECIAL FUNCTION REGISTER SUMMARY BANKS 0-63 PIC16(L)F19155/56/75/76/85/86 (CONTINUED)

Address	Name	Bit 7	Bit 6	Bit 5	Bit 4	Bit 3	Bit 2	Bit 1	Bit 0	Value on: POR, BOR	Value on: MCLR
Bank 61 (Continued)											
1ECFh	—	Unimplemented								---- ----	---- ----
1ED0h	—	Unimplemented								---- ----	---- ----
1ED1h	—	Unimplemented								---- ----	---- ----
1ED2h	—	Unimplemented								---- ----	---- ----
1ED3h	—	Unimplemented								---- ----	---- ----
1ED4h	—	Unimplemented								---- ----	---- ----
1ED5h	—	Unimplemented								---- ----	---- ----
1ED6h	—	Unimplemented								---- ----	---- ----
1ED7h	—	Unimplemented								---- ----	---- ----
1ED8h	—	Unimplemented								---- ----	---- ----
1ED9h	—	Unimplemented								---- ----	---- ----
1EDAh	—	Unimplemented								---- ----	---- ----
1EDBh	—	Unimplemented								---- ----	---- ----
1EDCh	—	Unimplemented								---- ----	---- ----
1EDDh	—	Unimplemented								---- ----	---- ----
1EDEh	—	Unimplemented								---- ----	---- ----
1EDFh	—	Unimplemented								---- ----	---- ----
1EE0h	—	Unimplemented								---- ----	---- ----
1EE1h	—	Unimplemented								---- ----	---- ----
1EE2h	—	Unimplemented								---- ----	---- ----
1EE3h	—	Unimplemented								---- ----	---- ----
1EE4h	—	Unimplemented								---- ----	---- ----

Legend: x = unknown, u = unchanged, q = depends on condition, - = unimplemented, read as '0', r = reserved. Shaded locations unimplemented, read as '0'.

Note 1: Unimplemented data memory locations, read as '0'.

© 2017-2019 Microchip Technology Inc.

TABLE 4-12: SPECIAL FUNCTION REGISTER SUMMARY BANKS 0-63 PIC16(L)F19155/56/75/76/85/86 (CONTINUED)

Address	Name	Bit 7	Bit 6	Bit 5	Bit 4	Bit 3	Bit 2	Bit 1	Bit 0	Value on: POR, BOR	Value on: MCLR
Bank 61 (Continued)											
1EE5h	—	Unimplemented								---- ----	---- ----
1EE6h	—	Unimplemented								---- ----	---- ----
1EE7h	—	Unimplemented								---- ----	---- ----
1EE8h	—	Unimplemented								---- ----	---- ----
1EE9h	—	Unimplemented								---- ----	---- ----
1EEAh	—	Unimplemented								---- ----	---- ----
1EEBh	—	Unimplemented								---- ----	---- ----
1EECh	—	Unimplemented								---- ----	---- ----
1EEDh	—	Unimplemented								---- ----	---- ----
1EEEh	—	Unimplemented								---- ----	---- ----
1EEFh	—	Unimplemented								---- ----	---- ----

Legend: x = unknown, u = unchanged, q = depends on condition, - = unimplemented, read as '0', r = reserved. Shaded locations unimplemented, read as '0'.

Note 1: Unimplemented data memory locations, read as '0'.

© 2017-2019 Microchip Technology Inc.

TABLE 4-12: SPECIAL FUNCTION REGISTER SUMMARY BANKS 0-63 PIC16(L)F19155/56/75/76/85/86 (CONTINUED)

Address	Name	Bit 7	Bit 6	Bit 5	Bit 4	Bit 3	Bit 2	Bit 1	Bit 0	Value on: POR, BOR	Value on: MCLR
Bank 62											
CPU CORE REGISTERS; see Table 4-3 for specifics											
1F0Ch	—	Unimplemented								---- ----	---- ----
1F0Dh	—	Unimplemented								---- ----	---- ----
1F0Eh	—	Unimplemented								---- ----	---- ----
1F0Fh	—	Unimplemented								---- ----	---- ----
1F10h	RA0PPS	—	—	—	RA0PPS4	RA0PPS3	RA0PPS2	RA0PPS1	RA0PPS0	---0 0000	---u uuuu
1F11h	RA1PPS	—	—	—	RA1PPS4	RA1PPS3	RA1PPS2	RA1PPS1	RA1PPS0	---0 0000	---u uuuu
1F12h	RA2PPS	—	—	—	RA2PPS4	RA2PPS3	RA2PPS2	RA2PPS1	RA2PPS0	---0 0000	---u uuuu
1F13h	RA3PPS	—	—	—	RA3PPS4	RA3PPS3	RA3PPS2	RA3PPS1	RA3PPS0	---0 0000	---u uuuu
1F14h	RA4PPS	—	—	—	RA4PPS4	RA4PPS3	RA4PPS2	RA4PPS1	RA4PPS0	---0 0000	---u uuuu
1F15h	RA5PPS	—	—	—	RA5PPS4	RA5PPS3	RA5PPS2	RA5PPS1	RA5PPS0	---0 0000	---u uuuu
1F16h	RA6PPS	—	—	—	RA6PPS4	RA6PPS3	RA6PPS2	RA6PPS1	RA6PPS0	---0 0000	---u uuuu
1F17h	RA7PPS	—	—	—	RA7PPS4	RA7PPS3	RA7PPS2	RA7PPS1	RA7PPS0	---0 0000	---u uuuu
1F18h	RB0PPS	—	—	—	RB0PPS4	RB0PPS3	RB0PPS2	RB0PPS1	RB0PPS0	---0 0000	---u uuuu
1F19h	RB1PPS	—	—	—	RB1PPS4	RB1PPS3	RB1PPS2	RB1PPS1	RB1PPS0	---0 0000	---u uuuu
1F1Ah	RB2PPS	—	—	—	RB2PPS4	RB2PPS3	RB2PPS2	RB2PPS1	RB2PPS0	---0 0000	---u uuuu
1F1Bh	RB3PPS	—	—	—	RB3PPS4	RB3PPS3	RB3PPS2	RB3PPS1	RB3PPS0	---0 0000	---u uuuu
1F1Ch	RB4PPS	—	—	—	RB4PPS4	RB4PPS3	RB4PPS2	RB4PPS1	RB4PPS0	---0 0000	---u uuuu
1F1Dh	RB5PPS	—	—	—	RB5PPS4	RB5PPS3	RB5PPS2	RB5PPS1	RB5PPS0	---0 0000	---u uuuu
1F1Eh	RB6PPS	—	—	—	RB6PPS4	RB6PPS3	RB6PPS2	RB6PPS1	RB6PPS0	---0 0000	---u uuuu
1F1Fh	RB7PPS	—	—	—	RB7PPS4	RB7PPS3	RB7PPS2	RB7PPS1	RB7PPS0	---0 0000	---u uuuu

Legend: x = unknown, u = unchanged, q = depends on condition, - = unimplemented, read as '0', r = reserved. Shaded locations unimplemented, read as '0'.

Note 1: Unimplemented data memory locations, read as '0'.

© 2017-2019 Microchip Technology Inc.

TABLE 4-12: SPECIAL FUNCTION REGISTER SUMMARY BANKS 0-63 PIC16(L)F19155/56/75/76/85/86 (CONTINUED)

Address	Name	Bit 7	Bit 6	Bit 5	Bit 4	Bit 3	Bit 2	Bit 1	Bit 0	Value on: POR, BOR	Value on: MCLR
Bank 62 (Continued)											
1F20h	RC0PPS	—	—	—	RC0PPS4	RC0PPS3	RC0PPS2	RC0PPS1	RC0PPS0	---0 0000	---u uuuu
1F21h	RC1PPS	—	—	—	RC1PPS4	RC1PPS3	RC1PPS2	RC1PPS1	RC1PPS0	---0 0000	---u uuuu
1F22h	RC2PPS	—	—	—	RC2PPS4	RC2PPS3	RC2PPS2	RC2PPS1	RC2PPS0	---0 0000	---u uuuu
1F23h	RC3PPS	—	—	—	RC3PPS4	RC3PPS3	RC3PPS2	RC3PPS1	RC3PPS0	---0 0000	---u uuuu
1F24h	RC4PPS	—	—	—	RC4PPS4	RC4PPS3	RC4PPS2	RC4PPS1	RC4PPS0	---0 0000	---u uuuu
1F25h	—	—	—	—	—	—	—	—	—	---- ----	---- ----
1F26h	RC6PPS	—	—	—	RC6PPS4	RC6PPS3	RC6PPS2	RC6PPS1	RC6PPS0	---0 0000	---u uuuu
1F27h	RC7PPS	—	—	—	RC7PPS4	RC7PPS3	RC7PPS2	RC7PPS1	RC7PPS0	---0 0000	---u uuuu
1F28h	RD0PPS(2)	—	—	—	RD0PPS4	RD0PPS3	RD0PPS2	RD0PPS1	RD0PPS0	---0 0000	---u uuuu
1F29h	RD1PPS(2)	—	—	—	RD1PPS4	RD1PPS3	RD1PPS2	RD1PPS1	RD1PPS0	---0 0000	---u uuuu
1F2Ah	RD2PPS(2)	—	—	—	RD2PPS4	RD2PPS3	RD2PPS2	RD2PPS1	RD2PPS0	---0 0000	---u uuuu
1F2Bh	RD3PPS(2)	—	—	—	RD3PPS4	RD3PPS3	RD3PPS2	RD3PPS1	RD3PPS0	---0 0000	---u uuuu
1F2Ch	RD4PPS(2)	—	—	—	RD4PPS4	RD4PPS3	RD4PPS2	RD4PPS1	RD4PPS0	---0 0000	---u uuuu
1F2Dh	RD5PPS(2)	—	—	—	RD5PPS4	RD5PPS3	RD5PPS2	RD5PPS1	RD5PPS0	---0 0000	---u uuuu
1F2Eh	RD6PPS(2)	—	—	—	RD6PPS4	RD6PPS3	RD6PPS2	RD6PPS1	RD6PPS0	---0 0000	---u uuuu
1F2Fh	RD7PPS(2)	—	—	—	RD7PPS4	RD7PPS3	RD7PPS2	RD7PPS1	RD7PPS0	---0 0000	---u uuuu
1F30h	RE0PPS(2)	—	—	—	RE0PPS4	RE0PPS3	RE0PPS2	RE0PPS1	RE0PPS0	---0 0000	---u uuuu
1F31h	RE1PPS(2)	—	—	—	RE1PPS4	RE1PPS3	RE1PPS2	RE1PPS1	RE1PPS0	---0 0000	---u uuuu
1F32h	RE2PPS(2)	—	—	—	RE2PPS4	RE2PPS3	RE2PPS2	RE2PPS1	RE2PPS0	---0 0000	---u uuuu
1F33h	—	Unimplemented								---- ----	---- ----
1F34h	—	Unimplemented								---- ----	---- ----
1F35h	—	Unimplemented								---- ----	---- ----
1F36h	—	Unimplemented								---- ----	---- ----

Legend: x = unknown, u = unchanged, q = depends on condition, - = unimplemented, read as '0', r = reserved. Shaded locations unimplemented, read as '0'.

Note 1: Unimplemented data memory locations, read as '0'.
2: Present only on PIC16(L)F19175/76/85/86.
3: Present only on PIC16(L)F19185/86.

© 2017-2019 Microchip Technology Inc.

TABLE 4-12: SPECIAL FUNCTION REGISTER SUMMARY BANKS 0-63 PIC16(L)F19155/56/75/76/85/86 (CONTINUED)

Address	Name	Bit 7	Bit 6	Bit 5	Bit 4	Bit 3	Bit 2	Bit 1	Bit 0	Value on: POR, BOR	Value on: MCLR
Bank 62 (Continued)											
1F37h	—	Unimplemented								---- ----	---- ----
1F38h	ANSELA	ANSA7	ANSA6	—	ANSA4	ANSA3	ANSA2	ANSA1	ANSA0	11-1 1111	11-1 1111
1F39h	WPUA	WPUA7	WPUA6	WPUA5	WPUA4	WPUA3	WPUA2	WPUA1	WPUA0	00-0 0000	00-0 0000
1F3Ah	ODCONA	ODCA7	ODCA6	—	ODCA4	ODCA3	ODCA2	ODCA1	ODCA0	00-0 0000	00-0 0000
1F3Bh	SLRCONA	SLRA7	SLRA6	—	SLRA4	SLRA3	SLRA2	SLRA1	SLRA0	11-1 1111	11-1 1111
1F3Ch	INLVLA	INLVLA7	INLVLA6	INLVLA5	INLVLA4	INLVLA3	INLVLA2	INLVLA1	INLVLA0	1111 1111	1111 1111
1F3Dh	IOCAP	IOCAP7	IOCAP6	IOCAP5	IOCAP4	IOCAP3	IOCAP2	IOCAP1	IOCAP0	0000 0000	0000 0000
1F3Eh	IOCAN	IOCAN7	IOCAN6	IOCAN5	IOCAN4	IOCAN3	IOCAN2	IOCAN1	IOCAN0	0000 0000	0000 0000
1F3Fh	IOCAF	IOCAF7	IOCAF6	IOCAF5	IOCAF4	IOCAF3	IOCAF2	IOCAF1	IOCAF0	0000 0000	0000 0000
1F40h	—	Unimplemented								---- ----	---- ----
1F41h	—	Unimplemented								---- ----	---- ----
1F42h	—	Unimplemented								---- ----	---- ----
1F43h	ANSELB	ANSB7	ANSB6	ANSB5	ANSB4	ANSB3	ANSB2	ANSB1	ANSB0	1111 1111	1111 1111
1F44h	WPUB	WPUB7	WPUB6	WPUB5	WPUB4	WPUB3	WPUB2	WPUB1	WPUB0	0000 0000	0000 0000
1F45h	ODCONB	ODCB7	ODCB6	ODCB5	ODCB4	ODCB3	ODCB2	ODCB1	ODCB0	0000 0000	0000 0000
1F46h	SLRCONB	SLRB7	SLRB6	SLRB5	SLRB4	SLRB3	SLRB2	SLRB1	SLRB0	1111 1111	1111 1111
1F47h	INLVLB	INLVLB7	INLVLB6	INLVLB5	INLVLB4	INLVLB3	INLVLB2	INLVLB1	INLVLB0	1111 1111	1111 1111
1F48h	IOCBP	IOCBP7	IOCBP6	IOCBP5	IOCBP4	IOCBP3	IOCBP2	IOCBP1	IOCBP0	0000 0000	0000 0000
1F49h	IOCBN	IOCBN7	IOCBN6	IOCBN5	IOCBN4	IOCBN3	IOCBN2	IOCBN1	IOCBN0	0000 0000	0000 0000
1F4Ah	IOCBF	IOCBF7	IOCBF6	IOCBF5	IOCBF4	IOCBF3	IOCBF2	IOCBF1	IOCBF0	0000 0000	0000 0000
1F4Bh	—	Unimplemented								---- ----	---- ----
1F4Ch	—	Unimplemented								---- ----	---- ----
1F4Dh	—	Unimplemented								---- ----	---- ----

Legend: x = unknown, u = unchanged, q = depends on condition, - = unimplemented, read as '0', r = reserved. Shaded locations unimplemented, read as '0'.

Note 1: Unimplemented data memory locations, read as '0'.

© 2017-2019 Microchip Technology Inc.

TABLE 4-12: SPECIAL FUNCTION REGISTER SUMMARY BANKS 0-63 PIC16(L)F19155/56/75/76/85/86 (CONTINUED)

Address	Name	Bit 7	Bit 6	Bit 5	Bit 4	Bit 3	Bit 2	Bit 1	Bit 0	Value on: POR, BOR	Value on: MCLR
Bank 62 (Continued)											
1F4Eh	ANSELC	ANSC7	ANSC6	—	ANSC4	ANSC3	ANSC2	ANSC1	ANSC0	11-1 1111	11-1 1111
1F4Fh	WPUC	WPUC7	WPUC6	—	WPUC4	WPUC3	WPUC2	WPUC1	WPUC0	00-0 0000	00-0 0000
1F50h	ODCONC	ODCC7	ODCC6	—	ODCC4	ODCC3	ODCC2	ODCC1	ODCC0	00-0 0000	00-0 0000
1F51h	SLRCONC	SLRC7	SLRC6	—	SLRC4	SLRC3	SLRC2	SLRC1	SLRC0	11-1 1111	11-1 1111
1F52h	INLVLC	INLVLC7	INLVLC6	—	INLVLC4	INLVLC3	INLVLC2	INLVLC1	INLVLC0	11--1 1111	11-1 1111
1F53h	IOCCP	IOCCP7	IOCCP6	—	IOCCP4	IOCCP3	IOCCP2	IOCCP1	IOCCP0	00-0 0000	00-0 0000
1F54h	IOCCN	IOCCN7	IOCCN6	—	IOCCN4	IOCCN3	IOCCN2	IOCCN1	IOCCN0	00-0 0000	00-0 0000
1F55h	IOCCF	IOCCF7	IOCCF6	—	IOCCF4	IOCCF3	IOCCF2	IOCCF1	IOCCF0	00-0 0000	00-0 0000
1F56h	—	Unimplemented								---- ----	---- ----
1F57h	—	Unimplemented								---- ----	---- ----
1F58h	—	Unimplemented								---- ----	---- ----
1F59h	ANSELD(2)	ANSD7	ANSD6	ANSD5	ANSD4	ANSD3	ANSD2	ANSD1	ANSD0	1111 1111	1111 1111
1F5Ah	WPUD(2)	WPUD7	WPUD6	WPUD5	WPUD4	WPUD3	WPUD2	WPUD1	WPUD0	0000 0000	0000 0000
1F5Bh	ODCOND(2)	ODCD7	ODCD6	ODCD5	ODCD4	ODCD3	ODCD2	ODCD1	ODCD0	0000 0000	0000 0000
1F5Ch	SLRCOND(2)	SLRD7	SLRD6	SLRD5	SLRD4	SLRD3	SLRD2	SLRD1	SLRD0	1111 1111	1111 1111
1F5Dh	INLVLD(2)	INLVLD7	INLVLD6	INLVLD5	INLVLD4	INLVLD3	INLVLD2	INLVLD1	INLVLD0	1111 1111	1111 1111
1F5Eh	—	Unimplemented								---- ----	---- ----
1F5Fh	—	Unimplemented								---- ----	---- ----
1F60h	—	Unimplemented								---- ----	---- ----
1F61h	—	Unimplemented								---- ----	---- ----
1F62h	—	Unimplemented								---- ----	---- ----
1F63h	—	Unimplemented								---- ----	---- ----

Legend: x = unknown, u = unchanged, q = depends on condition, - = unimplemented, read as '0', r = reserved. Shaded locations unimplemented, read as '0'.

Note 1: Unimplemented data memory locations, read as '0'.
2: Present only on PIC16(L)F19175/76/85/86.
3: Present only on PIC16(L)F19185/86.

© 2017-2019 Microchip Technology Inc.

TABLE 4-12: SPECIAL FUNCTION REGISTER SUMMARY BANKS 0-63 PIC16(L)F19155/56/75/76/85/86 (CONTINUED)

Address	Name	Bit 7	Bit 6	Bit 5	Bit 4	Bit 3	Bit 2	Bit 1	Bit 0	Value on: POR, BOR	Value on: MCLR
Bank 62 (Continued)											
1F64h	ANSELE(2)	—	—	—	—	—	ANSE2	ANSE1	ANSE0	---- -111	---- -111
1F65h	WPUE	—	—	—	—	WPUE3	WPUE2(2)	WPUE1(2)	WPUE0(2)	---- 0000	---- 0000
1F66h	ODCONE(2)	—	—	—	—	—	—	ODCE1	ODCE0	---- --00	---- --00
1F67h	SLRCONE(2)	—	—	—	—	—	SLRE2	SLRE1	SLRE0	---- -111	---- -111
1F68h	INLVLE	—	—	—	—	INLVLE3	INLVLE2(2)	INLVLE1(2)	INLVLE0(2)	---- 1111	---- 1111
1F69h	IOCEP	—	—	—	—	IOCEP3	—	—	—	---- 0---	---- 0---
1F6Ah	IOCEN	—	—	—	—	IOCEN3	—	—	—	---- 0---	---- 0---
1F6Bh	IOCEF	—	—	—	—	IOCEF3	—	—	—	---- 0---	---- 0---
1F6Ch	—	Unimplemented								---- ----	---- ----
1F6Dh	—	Unimplemented								---- ----	---- ----
1F6Fh	—	Unimplemented								---- ----	---- ----

Legend: x = unknown, u = unchanged, q = depends on condition, - = unimplemented, read as '0', r = reserved. Shaded locations unimplemented, read as '0'.

Note 1: Unimplemented data memory locations, read as '0'.
2: Present only on PIC16(L)F19175/76/85/86.
3: Present only on PIC16(L)F19185/86.

© 2017-2019 Microchip Technology Inc.

TABLE 4-12: SPECIAL FUNCTION REGISTER SUMMARY BANKS 0-63 PIC16(L)F19155/56/75/76/85/86 (CONTINUED)

Address	Name	Bit 7	Bit 6	Bit 5	Bit 4	Bit 3	Bit 2	Bit 1	Bit 0	Value on: POR, BOR	Value on: MCLR
Bank 63											
CPU CORE REGISTERS; see Table 4-3 for specifics											
1F8Ch	—	Unimplemented								---- ----	---- ----
1F8Dh	—	Unimplemented								---- ----	---- ----
1F8Eh	—	Unimplemented								---- ----	---- ----
1F8Fh	—	Unimplemented								---- ----	---- ----
1F90h	—	Unimplemented								---- ----	---- ----
1F91h	—	Unimplemented								---- ----	---- ----
1F92h	—	Unimplemented								---- ----	---- ----
1F93h	—	Unimplemented								---- ----	---- ----
1F94h	—	Unimplemented								---- ----	---- ----
1F95h	—	Unimplemented								---- ----	---- ----
1F96h	—	Unimplemented								---- ----	---- ----
1F97h	—	Unimplemented								---- ----	---- ----
1F98h	—	Unimplemented								---- ----	---- ----
1F99h	—	Unimplemented								---- ----	---- ----
1F9Ah	—	Unimplemented								---- ----	---- ----
1F9Bh	—	Unimplemented								---- ----	---- ----
1F9Ch	—	Unimplemented								---- ----	---- ----
1F9Dh	—	Unimplemented								---- ----	---- ----
1F9Eh	—	Unimplemented								---- ----	---- ----
1F9Fh	—	Unimplemented								---- ----	---- ----
1FA0h	—	Unimplemented								---- ----	---- ----

Legend: x = unknown, u = unchanged, q = depends on condition, - = unimplemented, read as '0', r = reserved. Shaded locations unimplemented, read as '0'.

Note 1: Unimplemented data memory locations, read as '0'.

© 2017-2019 Microchip Technology Inc.

TABLE 4-12: SPECIAL FUNCTION REGISTER SUMMARY BANKS 0-63 PIC16(L)F19155/56/75/76/85/86 (CONTINUED)

Address	Name	Bit 7	Bit 6	Bit 5	Bit 4	Bit 3	Bit 2	Bit 1	Bit 0	Value on: POR, BOR	Value on: MCLR
Bank 63 (Continued)											
1FA1h	—	Unimplemented								---- ----	---- ----
1FA2h	—	Unimplemented								---- ----	---- ----
1FA3h	—	Unimplemented								---- ----	---- ----
1FA4h	—	Unimplemented								---- ----	---- ----
1FA5h	—	Unimplemented								---- ----	---- ----
1FA6h	—	Unimplemented								---- ----	---- ----
1FA7h	—	Unimplemented								---- ----	---- ----
1FA8h	—	Unimplemented								---- ----	---- ----
1FA9h	—	Unimplemented								---- ----	---- ----
1FAAh	—	Unimplemented								---- ----	---- ----
1FABh	—	Unimplemented								---- ----	---- ----
1FACh	—	Unimplemented								---- ----	---- ----
1FADh	—	Unimplemented								---- ----	---- ----
1FAEh	—	Unimplemented								---- ----	---- ----
1FAFh	—	Unimplemented								---- ----	---- ----
1FB0h	—	Unimplemented								---- ----	---- ----
1FB1h	—	Unimplemented								---- ----	---- ----
1FB2h	—	Unimplemented								---- ----	---- ----
1FB3h	—	Unimplemented								---- ----	---- ----
1FB4h	—	Unimplemented								---- ----	---- ----
1FB5h	—	Unimplemented								---- ----	---- ----
1FB6h	—	Unimplemented								---- ----	---- ----
1FB7h	—	Unimplemented								---- ----	---- ----

Legend: x = unknown, u = unchanged, q = depends on condition, - = unimplemented, read as '0', r = reserved. Shaded locations unimplemented, read as '0'.

Note 1: Unimplemented data memory locations, read as '0'.

© 2017-2019 Microchip Technology Inc.

TABLE 4-12: SPECIAL FUNCTION REGISTER SUMMARY BANKS 0-63 PIC16(L)F19155/56/75/76/85/86 (CONTINUED)

Address	Name	Bit 7	Bit 6	Bit 5	Bit 4	Bit 3	Bit 2	Bit 1	Bit 0	Value on: POR, BOR	Value on: MCLR
Bank 63 (Continued)											
1FB8h	—	Unimplemented								---- ----	---- ----
1FB9h	—	Unimplemented								---- ----	---- ----
1FBAh	—	Unimplemented								---- ----	---- ----
1FBBh	—	Unimplemented								---- ----	---- ----
1FBCh	—	Unimplemented								---- ----	---- ----
1FBDh	—	Unimplemented								---- ----	---- ----
1FBEh	—	Unimplemented								---- ----	---- ----
1FBFh	—	Unimplemented								---- ----	---- ----
1FC0h	—	Unimplemented								---- ----	---- ----
1FC1h	—	Unimplemented								---- ----	---- ----
1FC2h	—	Unimplemented								---- ----	---- ----
1FC3h	—	Unimplemented								---- ----	---- ----
1FC4h	—	Unimplemented								---- ----	---- ----
1FC5h	—	Unimplemented								---- ----	---- ----
1FC6h	—	Unimplemented								---- ----	---- ----
1FC7h	—	Unimplemented								---- ----	---- ----
1FC8h	—	Unimplemented								---- ----	---- ----
1FC9h	—	Unimplemented								---- ----	---- ----
1FCAh	—	Unimplemented								---- ----	---- ----
1FCBh	—	Unimplemented								---- ----	---- ----
1FCCh	—	Unimplemented								---- ----	---- ----
1FCDh	—	Unimplemented								---- ----	---- ----
1FCEh	—	Unimplemented								---- ----	---- ----
1FCFh	—	Unimplemented								---- ----	---- ----

Legend: x = unknown, u = unchanged, q = depends on condition, - = unimplemented, read as '0', r = reserved. Shaded locations unimplemented, read as '0'.

Note 1: Unimplemented data memory locations, read as '0'.

© 2017-2019 Microchip Technology Inc.

TABLE 4-12: SPECIAL FUNCTION REGISTER SUMMARY BANKS 0-63 PIC16(L)F19155/56/75/76/85/86 (CONTINUED)

Address	Name	Bit 7	Bit 6	Bit 5	Bit 4	Bit 3	Bit 2	Bit 1	Bit 0	Value on: POR, BOR	Value on: MCLR
Bank 63 (Continued)											
1FD0h	—	Unimplemented								---- ----	---- ----
1FD1h	—	Unimplemented								---- ----	---- ----
1FD2h	—	Unimplemented								---- ----	---- ----
1FD3h	—	Unimplemented								---- ----	---- ----
1FD4h	—	Unimplemented								---- ----	---- ----
1FD5h	—	Unimplemented								---- ----	---- ----
1FD6h	—	Unimplemented								---- ----	---- ----
1FD7h	—	Unimplemented								---- ----	---- ----
1FD8h	—	Unimplemented								---- ----	---- ----
1FD9h	—	Unimplemented								---- ----	---- ----
1FDAh	—	Unimplemented								---- ----	---- ----
1FDBh	—	Unimplemented								---- ----	---- ----
1FDCh	—	Unimplemented								---- ----	---- ----
1FDDh	—	Unimplemented								---- ----	---- ----
1FDEh	—	Unimplemented								---- ----	---- ----
1FDFh	—	Unimplemented								---- ----	---- ----
1FE0h	—	Unimplemented								---- ----	---- ----
1FE1h	—	Unimplemented								---- ----	---- ----
1FE2h	—	Unimplemented								---- ----	---- ----
1FE3h	—	Unimplemented								---- ----	---- ----

Legend: x = unknown, u = unchanged, q = depends on condition, - = unimplemented, read as '0', r = reserved. Shaded locations unimplemented, read as '0'.

Note 1: Unimplemented data memory locations, read as '0'.

© 2017-2019 Microchip Technology Inc.

TABLE 4-12: SPECIAL FUNCTION REGISTER SUMMARY BANKS 0-63 PIC16(L)F19155/56/75/76/85/86 (CONTINUED)

Address	Name	Bit 7	Bit 6	Bit 5	Bit 4	Bit 3	Bit 2	Bit 1	Bit 0	Value on: POR, BOR	Value on: MCLR
Bank 63 (Continued)											
1FE4h	STATUS_SHAD	—	—	—	—	—	Z_SHAD	DC_SHAD	C_SHAD	---- -xxx	---- -uuu
1FE5h	WREG_SHAD	WREG_SHAD<7:0>								xxxx xxxx	uuuu uuuu
1FE6h	BSR_SHAD	—	—	—	BSR_SHAD<4:0>					---x xxxx	---u uuuu
1FE7h	PCLATH_SHAD	—	PCLATH_SHAD<6:0>							-xxx xxxx	-uuu uuuu
1FE8h	FSR0L_SHAD	FSR0L_SHAD<7:0>								xxxx xxxx	uuuu uuuu
1FE9h	FSR0H_SHAD	FSR0H_SHAD<7:0>								xxxx xxxx	uuuu uuuu
1FEAh	FSR1L_SHAD	FSR1L_SHAD<7:0>								xxxx xxxx	uuuu uuuu
1FEBh	FSR1H_SHAD	FSR1H_SHAD<7:0>								xxxx xxxx	uuuu uuuu
1FECh	—	Unimplemented								---- ----	---- ----
1FEDh	STKPTR	—	—	—	STKPTR<4:0>					---1 1100	---u uuuu
1FEEh	TOSL	TOSL<7:0>								xxxx xxxx	uuuu uuuu
1FEFh	TOSH	—	TOSH<6:0>							-xxx xxxx	-uuu uuuu

Legend: x = unknown, u = unchanged, q = depends on condition, - = unimplemented, read as '0', r = reserved. Shaded locations unimplemented, read as '0'.

Note 1: Unimplemented data memory locations, read as '0'.

© 2017-2019 Microchip Technology Inc.

4.4 PCL and PCLATH

The Program Counter (PC) is 15 bits wide. The low byte comes from the PCL register, which is a readable and writable register. The high byte (PC<14:8>) is not directly readable or writable and comes from PCLATH. On any Reset, the PC is cleared. Figure 4-3 shows the five situations for the loading of the PC.

FIGURE 4-3: LOADING OF PC IN DIFFERENT SITUATIONS

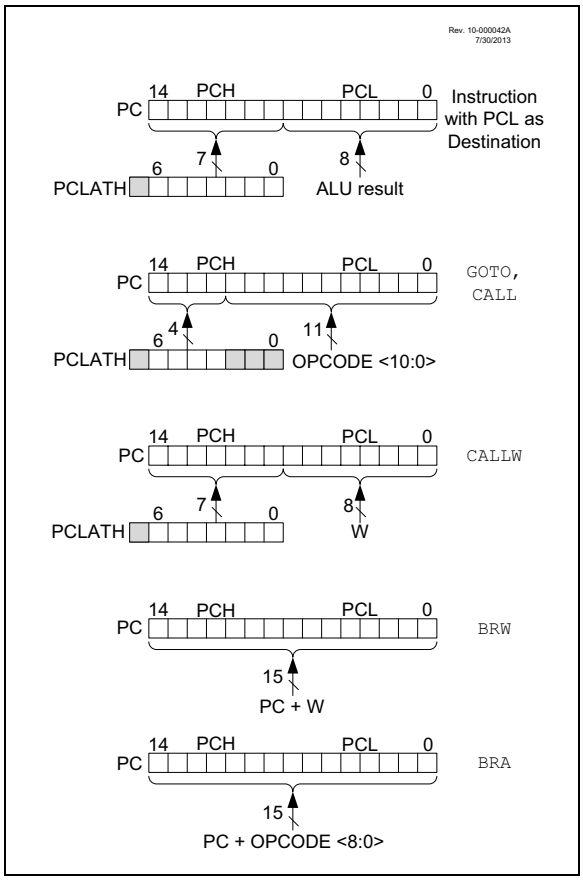

4.4.1 MODIFYING PCL

Executing any instruction with the PCL register as the destination simultaneously causes the Program Counter PC<14:8> bits (PCH) to be replaced by the contents of the PCLATH register. This allows the entire contents of the program counter to be changed by writing the desired upper seven bits to the PCLATH register. When the lower eight bits are written to the PCL register, all 15 bits of the program counter will change to the values contained in the PCLATH register and those being written to the PCL register.

4.4.2 COMPUTED GOTO

A computed GOTO is accomplished by adding an offset to the program counter (ADDWF PCL). When performing a table read using a computed GOTO method, care should be exercised if the table location crosses a PCL memory boundary (each 256-byte block). Refer to Application Note AN556, *"Implementing a Table Read"* (DS00556).

4.4.3 COMPUTED FUNCTION CALLS

A computed function CALL allows programs to maintain tables of functions and provide another way to execute state machines or look-up tables. When performing a table read using a computed function CALL, care should be exercised if the table location crosses a PCL memory boundary (each 256-byte block).

If using the CALL instruction, the PCH<2:0> and PCL registers are loaded with the operand of the CALL instruction. PCH<6:3> is loaded with PCLATH<6:3>.

The CALLW instruction enables computed calls by combining PCLATH and W to form the destination address. A computed CALLW is accomplished by loading the W register with the desired address and executing CALLW. The PCL register is loaded with the value of W and PCH is loaded with PCLATH.

4.4.4 BRANCHING

The branching instructions add an offset to the PC. This allows relocatable code and code that crosses page boundaries. There are two forms of branching, BRW and BRA. The PC will have incremented to fetch the next instruction in both cases. When using either branching instruction, a PCL memory boundary may be crossed.

If using BRW, load the W register with the desired unsigned address and execute BRW. The entire PC will be loaded with the address PC + 1 + W.

If using BRA, the entire PC will be loaded with PC + 1 + the signed value of the operand of the BRA instruction.

4.5 Stack

All devices have a 16-level x 15-bit wide hardware stack (refer to Figure 4-4 through Figure 4-7). The stack space is not part of either program or data space. The PC is PUSHed onto the stack when `CALL` or `CALLW` instructions are executed or an interrupt causes a branch. The stack is POPed in the event of a `RETURN`, `RETLW` or a `RETFIE` instruction execution. PCLATH is not affected by a PUSH or POP operation.

The stack operates as a circular buffer if the STVREN bit is programmed to '`0`' (Configuration Words). This means that after the stack has been PUSHed sixteen times, the seventeenth PUSH overwrites the value that was stored from the first PUSH. The eighteenth PUSH overwrites the second PUSH (and so on). The STKOVF and STKUNF flag bits will be set on an Overflow/Underflow, regardless of whether the Reset is enabled.

Note 1:	There are no instructions/mnemonics called PUSH or POP. These are actions that occur from the execution of the `CALL`, `CALLW`, `RETURN`, `RETLW` and `RETFIE` instructions or the vectoring to an interrupt address.

4.5.1 ACCESSING THE STACK

The stack is accessible through the TOSH, TOSL and STKPTR registers. STKPTR is the current value of the Stack Pointer. TOSH:TOSL register pair points to the TOP of the stack. Both registers are read/writable. TOS is split into TOSH and TOSL due to the 15-bit size of the PC. To access the stack, adjust the value of STKPTR, which will position TOSH:TOSL, then read/write to TOSH:TOSL. STKPTR is five bits to allow detection of overflow and underflow.

Note:	Care should be taken when modifying the STKPTR while interrupts are enabled.

During normal program operation, `CALL`, `CALLW` and interrupts will increment STKPTR while `RETLW`, `RETURN`, and `RETFIE` will decrement STKPTR. STKPTR can be monitored to obtain the value of stack memory left at any given time. The STKPTR always points at the currently used place on the stack. Therefore, a `CALL` or `CALLW` will increment the STKPTR and then write the PC, and a return will unload the PC value from the stack and then decrement the STKPTR.

Reference Figure 4-4 through Figure 4-7 for examples of accessing the stack.

FIGURE 4-4: ACCESSING THE STACK EXAMPLE 1

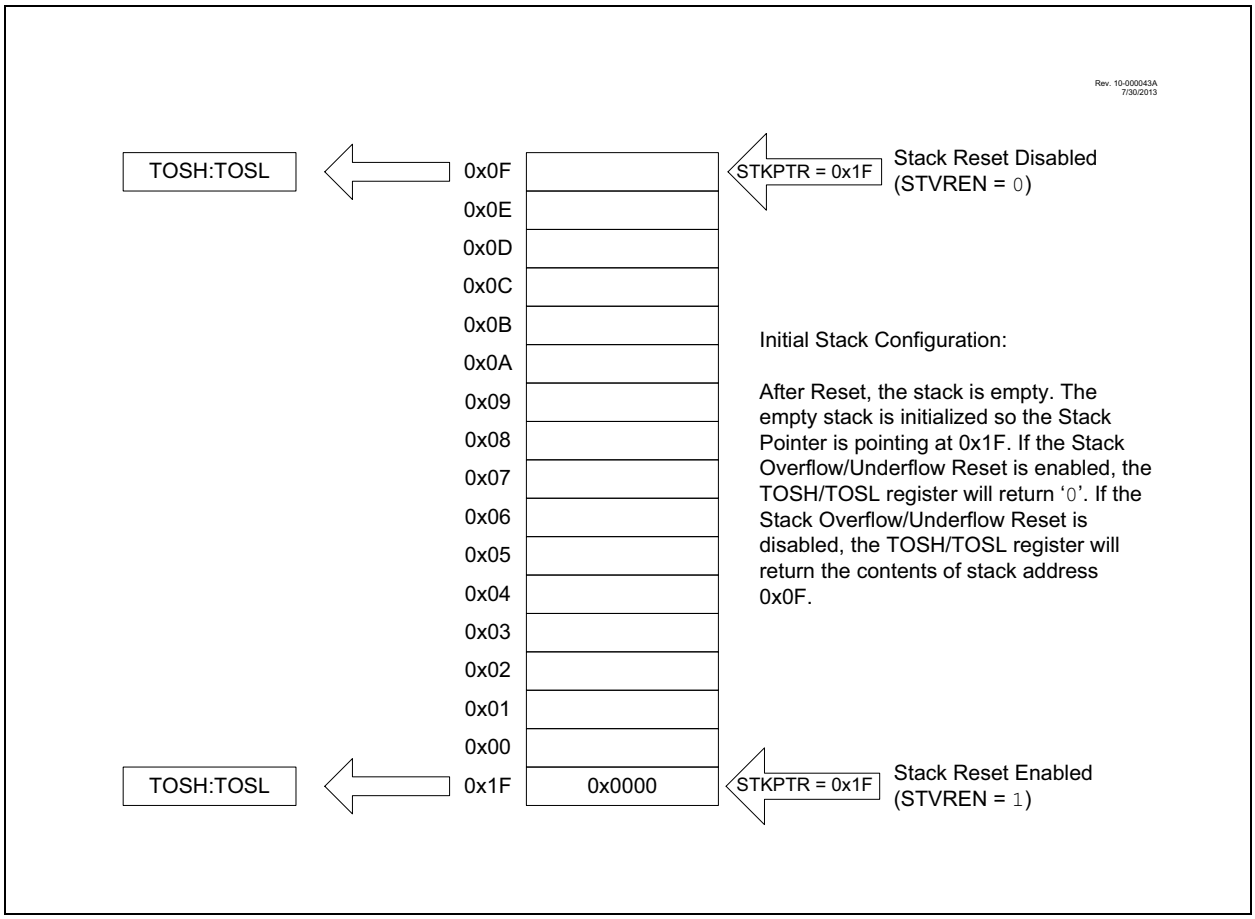

FIGURE 4-5: ACCESSING THE STACK EXAMPLE 2

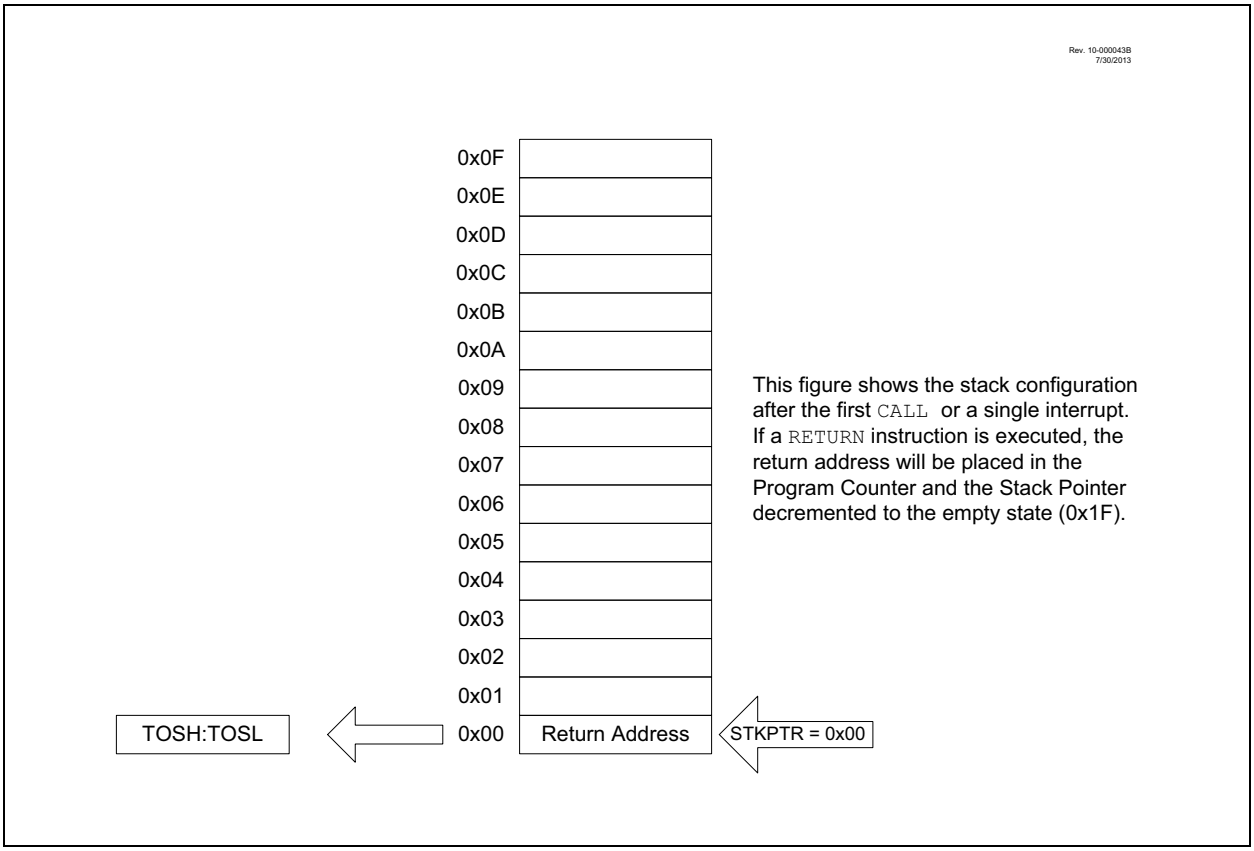

FIGURE 4-6: ACCESSING THE STACK EXAMPLE 3

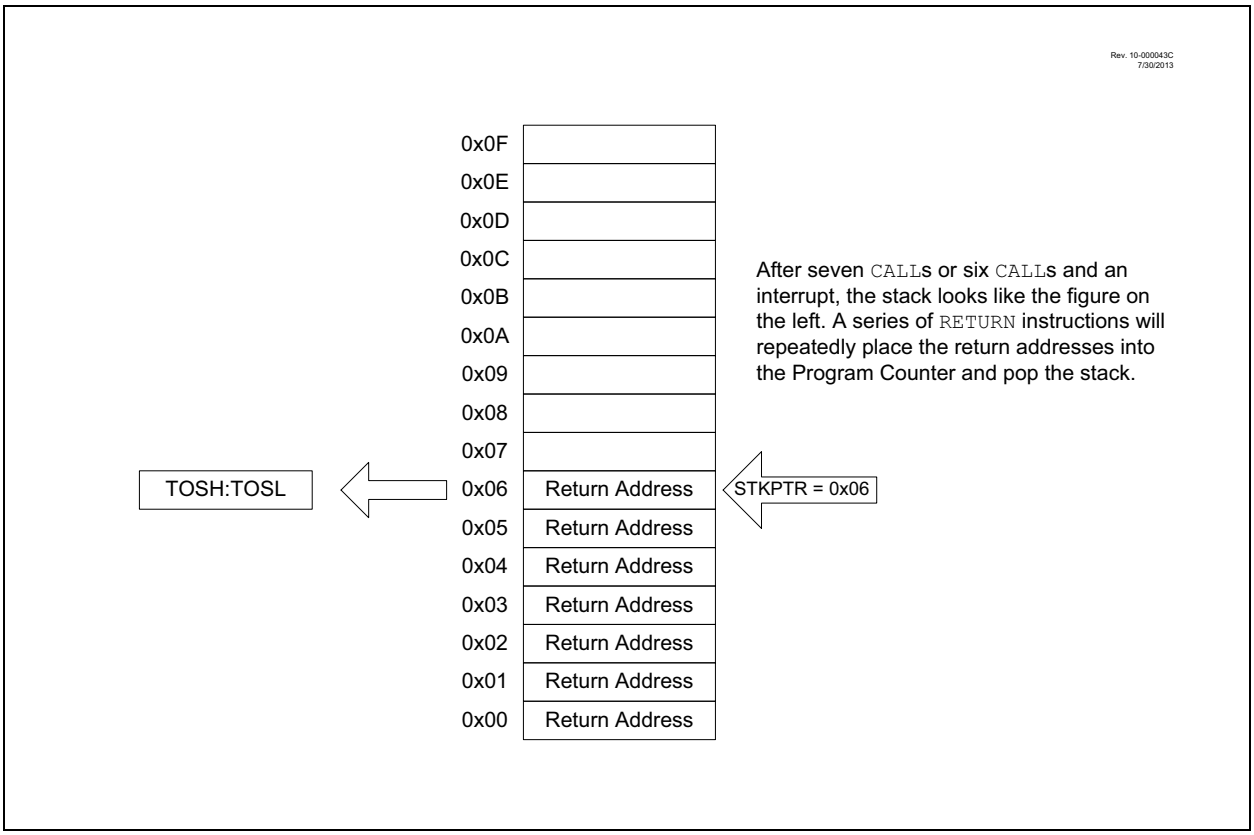

FIGURE 4-7: ACCESSING THE STACK EXAMPLE 4

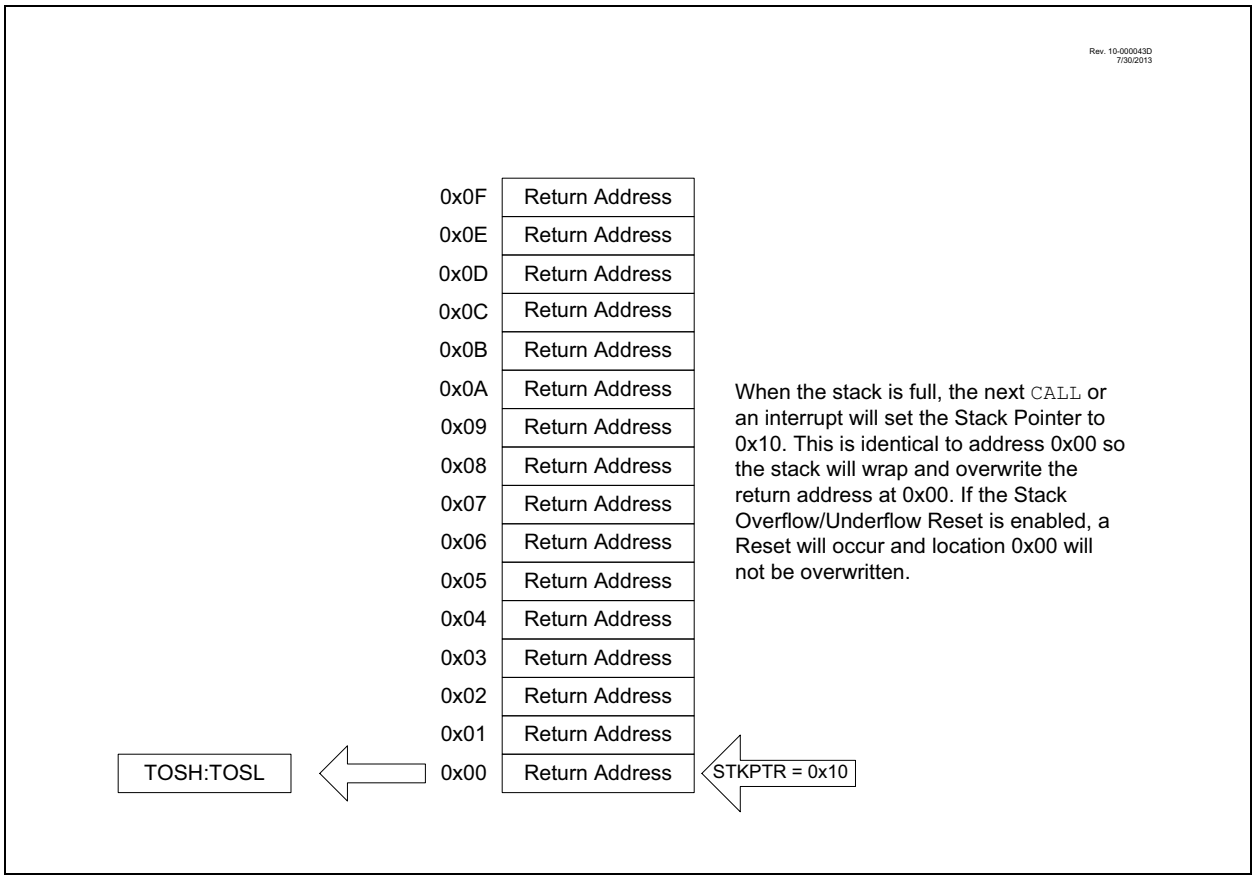

4.5.2 OVERFLOW/UNDERFLOW RESET

If the STVREN bit in Configuration Words (Register 5-2) is programmed to '1', the device will be Reset if the stack is PUSHed beyond the sixteenth level or POPed beyond the first level, setting the appropriate bits (STKOVF or STKUNF, respectively) in the PCON register.

4.6 Indirect Addressing

The INDFn registers are not physical registers. Any instruction that accesses an INDFn register actually accesses the register at the address specified by the File Select Registers (FSR). If the FSRn address specifies one of the two INDFn registers, the read will return '0' and the write will not occur (though Status bits may be affected). The FSRn register value is created by the pair FSRnH and FSRnL.

The FSR registers form a 16-bit address that allows an addressing space with 65536 locations. These locations are divided into four memory regions:

- Traditional/Banked Data Memory
- Linear Data Memory
- Program Flash Memory
- EEPROM

FIGURE 4-8: INDIRECT ADDRESSING PIC16(L)F19155/75/85

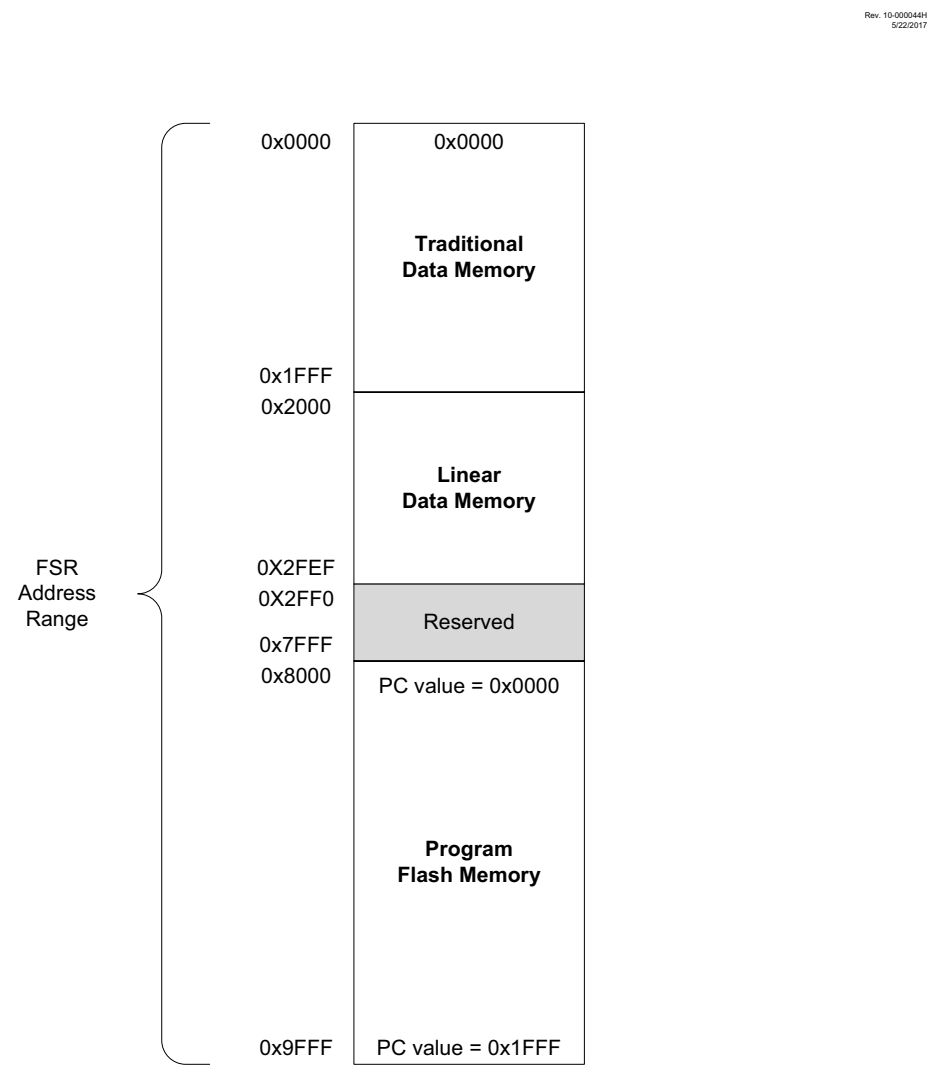

FIGURE 4-9: INDIRECT ADDRESSING PIC16(L)F19156/76/86

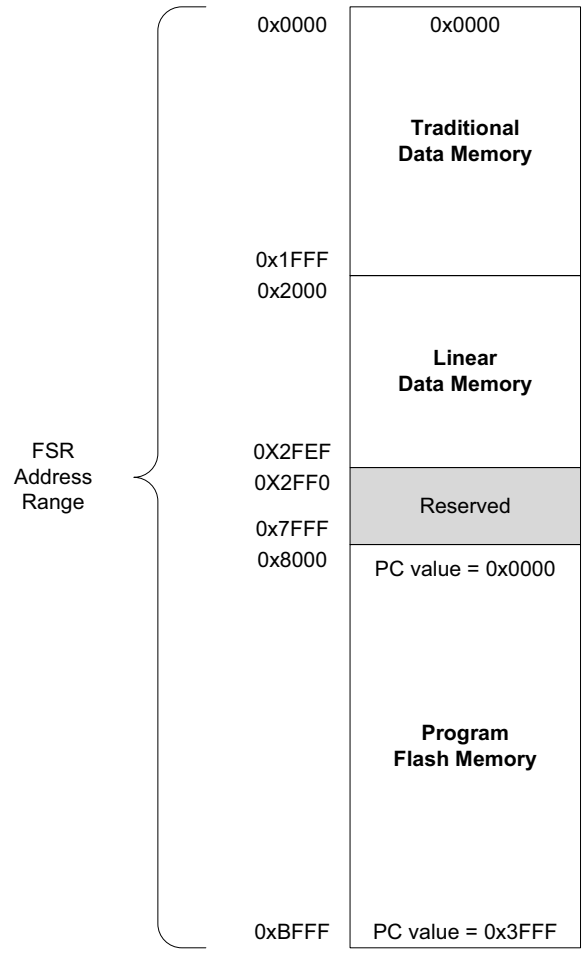

4.6.1 TRADITIONAL/BANKED DATA MEMORY

The traditional or banked data memory is a region from FSR address 0x000 to FSR address 0x1FFF. The addresses correspond to the absolute addresses of all SFR, GPR and common registers.

FIGURE 4-10: TRADITIONAL/BANKED DATA MEMORY MAP

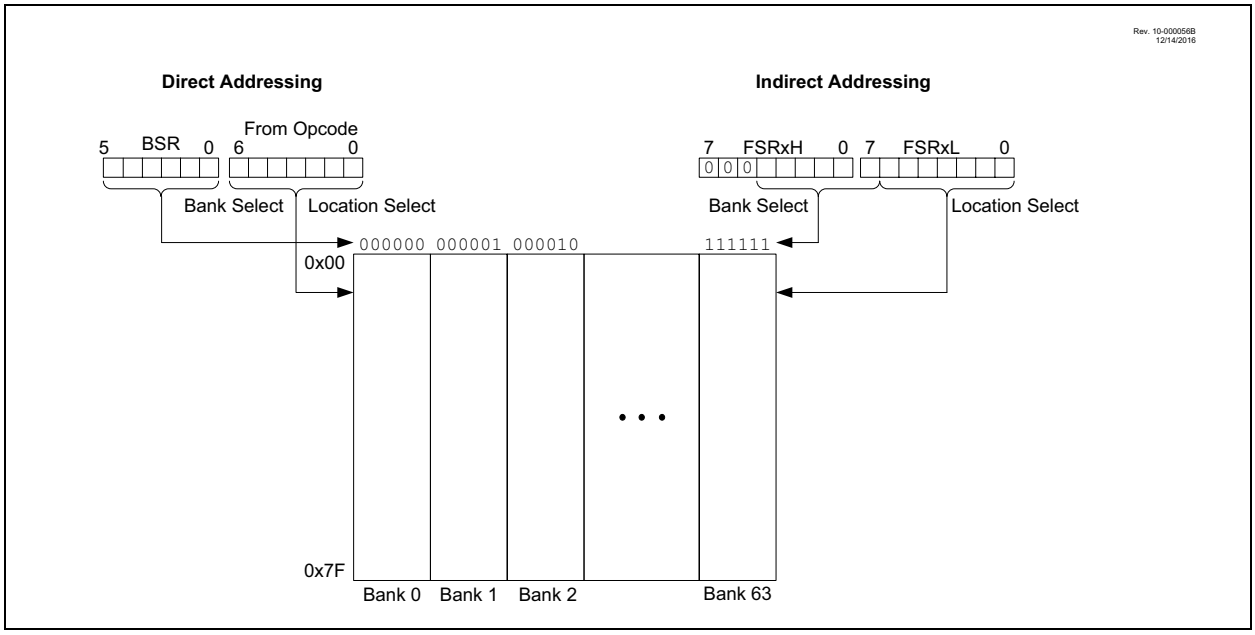

4.6.2 LINEAR DATA MEMORY

The linear data memory is the region from FSR address 0x2000 to FSR address 0X2FEF. This region is a virtual region that points back to the 80-byte blocks of GPR memory in all the banks. Refer to Figure 4-8 and Figure 4-9 for the Linear Data Memory Map.

> **Note:** The address range 0x2000 to 0x2FF0 represents the complete addressable Linear Data Memory up to Bank 50. The actual implemented Linear Data Memory will differ from one device to the other in a family. Confirm the memory limits on every device.

Unimplemented memory reads as `0x00`. Use of the linear data memory region allows buffers to be larger than 80 bytes because incrementing the FSR beyond one bank will go directly to the GPR memory of the next bank.

The 16 bytes of common memory are not included in the linear data memory region.

FIGURE 4-11: LINEAR DATA MEMORY MAP

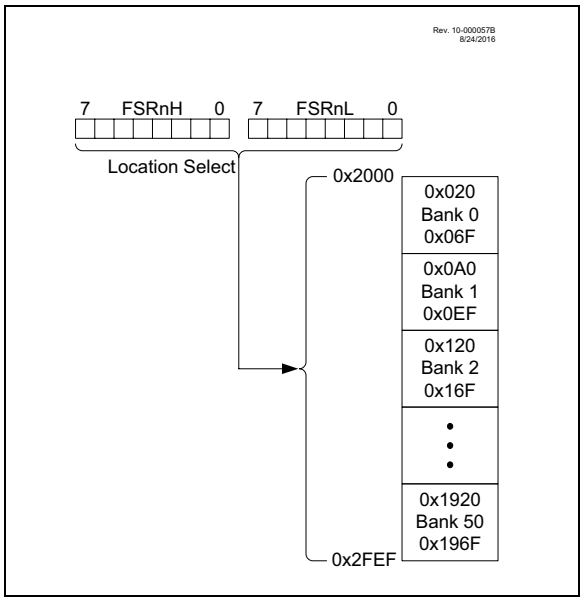

4.6.3 PROGRAM FLASH MEMORY

To make constant data access easier, the entire Program Flash Memory is mapped to the upper half of the FSR address space. When the MSB of FSRnH is set, the lower 15 bits are the address in program memory which will be accessed through INDF. Only the lower eight bits of each memory location is accessible via INDF. Writing to the Program Flash Memory cannot be accomplished via the FSR/INDF interface. All instructions that access Program Flash Memory via the FSR/INDF interface will require one additional instruction cycle to complete.

FIGURE 4-12: PROGRAM FLASH MEMORY MAP

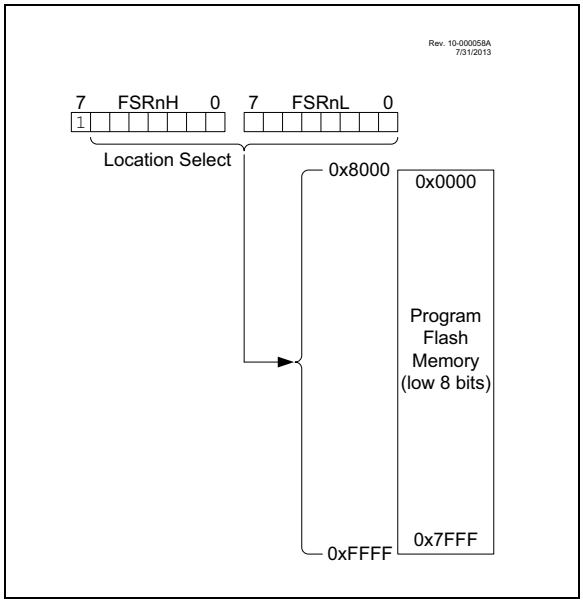

4.6.4 DATA EEPROM MEMORY

The EEPROM memory can be read or written through the NVMCON register interface (see **Section 13.2 "Data EEPROM Memory"**). However, to make access to the EEPROM easier, read-only access to the EEPROM contents are also available through indirect addressing via an FSR. When the MSP of the FSR (ex: FSRxH) is set to 0x70, the lower 8-bit address value (in FSRxL) determines the EEPROM location that may be read (via the INDF register). In other words, the EEPROM address range 0x00-0xFF is mapped into the FSR address space between 0x7000 and 0x70FF. Writing to the EEPROM cannot be accomplished via the FSR/INDF interface. Reads from the EEPROM through the FSR/INDF interface will require one additional instruction cycle to complete.

5.0 DEVICE CONFIGURATION

Device configuration consists of the Configuration Words, User ID, Device ID, Device Information Area (DIA), (see **Section 6.0 "Device Information Area"**), and the Device Configuration Information (DCI) regions, (see **Section 7.0 "Device Configuration Information"**).

5.1 Configuration Words

The devices have several Configuration Words starting at address 8007h. The Configuration bits establish configuration values prior to the execution of any software; Configuration bits enable or disable device-specific features.

In terms of programming, these important Configuration bits should be considered:

1. LVP: Low-Voltage Programming Enable bit

- 1 = ON – Low-Voltage Programming is enabled. $\overline{\text{MCLR}}$/VPP pin function is $\overline{\text{MCLR}}$. MCLRE Configuration bit is ignored.
- 0 = OFF – HV on $\overline{\text{MCLR}}$/VPP must be used for programming.

2. $\overline{\text{CP}}$: User Nonvolatile Memory (NVM) Program Memory Code Protection bit

- 1 = OFF – User NVM code protection disabled
- 0 = ON – User NVM code protection enabled

5.2 Register Definitions: Configuration Words

REGISTER 5-1: CONFIGURATION WORD 1: OSCILLATORS

R/P-1	U-1	R/P-1	R/P-1	R/P-1	R/P-1
FCMEN	—	CSWEN	LCDPEN	$\overline{\text{VBATEN}}$	$\overline{\text{CLKOUTEN}}$
bit 13					bit 8

U-1	R/P-1	R/P-1	R/P-1	U-1	R/P-1	R/P-1	R/P-1
—	RSTOSC2	RSTOSC1	RSTOSC0	—	FEXTOSC2	FEXTOSC1	FEXTOSC0
bit 7							bit 0

Legend:			
R = Readable bit	P = Programmable bit	x = Bit is unknown	U = Unimplemented bit, read as ‘1’
‘0’ = Bit is cleared	‘1’ = Bit is set	W = Writable bit	n = Value when blank or after Bulk Erase

bit 13 **FCMEN**: Fail-Safe Clock Monitor Enable bit
1 = FSCM timer enabled
0 = FSCM timer disabled

bit 12 **Unimplemented**: Read as ‘1’

bit 11 **CSWEN**: Clock Switch Enable bit
1 = Writing to NOSC and NDIV is allowed
0 = The NOSC and NDIV bits cannot be changed by user software

bit 10 **LCDPEN:** LCD Charge Pump Mode Enable bit
1 = User intends to enable LCD Charge Pump during LCD operation
0 = LCD Charge Pump forced off

bit 9 **$\overline{\text{VBATEN}}$:** VBAT Pin Enable bit
1 = VBAT functionality is disabled; VBAT pin becomes GPIO
0 = VBAT functionality is enabled; VBAT pin has a battery connected to it

bit 8 **$\overline{\text{CLKOUTEN}}$**: Clock Out Enable bit
If FEXTOSC = EC (high, mid or low) or Not Enabled:
1 = CLKOUT function is disabled; I/O or oscillator function on OSC2
0 = CLKOUT function is enabled; FOSC/4 clock appears at OSC2
Otherwise:
This bit is ignored.

bit 7 **Unimplemented**: Read as ‘1’

bit 6-4 **RSTOSC<2:0>**: Power-up Default Value for COSC bits
This value is the Reset-default value for COSC and selects the oscillator first used by user software.
111 = EXTOSC operating per FEXTOSC bits
110 = HFINTOSC with HFFRQ = 4’b0000
101 = LFINTOSC
100 = SOSC
011 = Reserved
010 = EXTOSC with 4x PLL, with EXTOSC operating per FEXTOSC bits
001 = HFINTOSC with 2x PLL = 32 MHz, with HFFRQ = ‘101’ and CDIV = ‘0000’
000 = HFINTOSC with OSCFRQ = 32 MHz and CDIV = 1:1

bit 3 **Unimplemented**: Read as ‘1’

bit 2-0 **FEXTOSC<2:0>**:FEXTOSC External Oscillator Mode Selection bits
111 = EC (External Clock) above 8 MHz
110 = EC (External Clock) for 500 kHz to 8 MHz
101 = EC (External Clock) below 500 kHz
100 = Oscillator not enabled
011 = Oscillator not enabled
010 = Oscillator not enabled
001 = Oscillator not enabled
000 = Oscillator not enabled

REGISTER 5-2: CONFIGURATION WORD 2: SUPERVISORS

R/P-1	R/P-1	R/P-1	R/P-1	R/P-1	U-1
$\overline{\text{DEBUG}}$(2)	STVREN	PPS1WAY	$\overline{\text{ZCD}}$	BORV	—
bit 13					bit 8

R/P-1	R/P-1	R/P-1	U-1	U-1	R/P-1	R/P-1	R/P-1
BOREN1	BOREN0	$\overline{\text{LPBOREN}}$	—	—	PWRTS1	PWRTS0	MCLRE
bit 7							bit 0

Legend:			
R = Readable bit	P = Programmable bit	x = Bit is unknown	U = Unimplemented bit, read as ‘1’
‘0’ = Bit is cleared	‘1’ = Bit is set	W = Writable bit	n = Value when blank or after Bulk Erase

bit 13 **$\overline{\text{DEBUG}}$**: Debugger Enable bit
1 = Background debugger disabled
0 = Background debugger enabled

bit 12 **STVREN**: Stack Overflow/Underflow Reset Enable bit
1 = Stack Overflow or Underflow will cause a Reset
0 = Stack Overflow or Underflow will not cause a Reset

bit 11 **PPS1WAY**: PPSLOCK One-Way Set Enable bit
1 = The PPSLOCK bit can be cleared and set only once; PPS registers remain locked after one clear/set cycle
0 = The PPSLOCK bit can be set and cleared repeatedly (subject to the unlock sequence)

bit 10 **$\overline{\text{ZCD}}$:** Zero-Cross Detect Disable bit
1 = ZCD disabled. ZCD can be enabled by setting the ZCDSEN bit of the ZCDCON register
0 = ZCD always enabled (ZCDSEN bit is ignored)

bit 9 **BORV**: Brown-out Reset Voltage Selection bit(1)
1 = Brown-out Reset voltage (V_{BOR}) set to lower trip point level
0 = Brown-out Reset voltage (V_{BOR}) set to higher trip point level

bit 8 **Unimplemented:** Read as ‘1’

bit 7-6 **BOREN<1:0>**: Brown-out Reset Enable bits
When enabled, Brown-out Reset Voltage (V_{BOR}) is set by the BORV bit
11 = Brown-out Reset is enabled; SBOREN bit is ignored
10 = Brown-out Reset is enabled while running, disabled in Sleep; SBOREN bit is ignored
01 = Brown-out Reset is enabled according to SBOREN
00 = Brown-out Reset is disabled

bit 5 **$\overline{\text{LPBOREN}}$**: Low-Power BOR Enable bit
1 = ULPBOR is disabled
0 = ULPBOR is enabled

bit 4-3 **Unimplemented**: Read as ‘1’

bit 2-1 **PWRTS<1:0>:** Power-up Timer selection bits
11 = PWRT disabled
10 = PWRT set at 64 ms
01 = PWRT set at 16 ms
00 = PWRT set at 1 ms

bit 0 **MCLRE**: Master Clear ($\overline{\text{MCLR}}$) Enable bit
If LVP = 1:
RG5 pin function is $\overline{\text{MCLR}}$ (it will reset the device when driven low)
If LVP = 0:
1 = $\overline{\text{MCLR}}$ pin is $\overline{\text{MCLR}}$ (it will reset the device when driven low)
0 = $\overline{\text{MCLR}}$ pin may be used as general purpose RG5 input

Note 1: See V_{BOR} parameter for specific trip point voltages.
2: The $\overline{\text{DEBUG}}$ bit in Configuration Words is managed automatically by device development tools including debuggers and programmers. For normal device operation, this bit should be maintained as a ‘1’.

REGISTER 5-3: CONFIGURATION WORD 3: WINDOWED WATCHDOG

R/P-1	R/P-1	R/P-1	R/P-1	R/P-1	R/P-1
WDTCCS2	WDTCCS1	WDTCCS0	WDTCWS2	WDTCWS1	WDTCWS0
bit 13					bit 8

U-1	R/P-1	R/P-1	R/P-1	R/P-1	R/P-1	R/P-1	R/P-1
—	WDTE1	WDTE0	WDTCPS4	WDTCPS3	WDTCPS2	WDTCPS1	WDTCPS0
bit 7							bit 0

Legend:			
R = Readable bit	P = Programmable bit	x = Bit is unknown	U = Unimplemented bit, read as ‘1’
‘0’ = Bit is cleared	‘1’ = Bit is set	W = Writable bit	n = Value when blank or after Bulk Erase

bit 13-11 **WDTCCS<2:0>**: WDT Input Clock Selector bits
`000` = WDT reference clock is the 31.25 kHz HFINTOSC (MFINTOSC) output
`001` = WDT reference clock is the 31.0 kHz LFINTOSC (default value)
`010` = Reserved
.
.
.
.
`110` = Reserved
`111` = Software Control

bit 10-8 **WDTCWS<2:0>**: WDT Window Select bits

WDTCWS	WDTWS at POR			Software control of WDTWS?	Keyed access required?
	Value	Window delay Percent of time	Window opening Percent of time		
000	000	87.5	12.5	No	Yes
001	001	75	25		
010	010	62.5	37.5		
011	011	50	50		
100	100	37.5	62.5		
101	101	25	75		
110	111	n/a	100		
111	111	n/a	100	Yes	No

bit 7 **Unimplemented**: Read as ‘`1`’

bit 6-5 **WDTE<1:0>**: WDT Operating mode:
`00` =WDT disabled, SWDTEN is ignored
`01` =WDT enabled/disabled by SWDTEN bit in WDTCON0
`10` =WDT enabled while Sleep = `0`, suspended when Sleep = `1`; SWDTEN ignored
`11` =WDT enabled regardless of Sleep; SWDTEN is ignored

REGISTER 5-3: CONFIGURATION WORD 3: WINDOWED WATCHDOG (CONTINUED)

bit 4-0 **WDTCPS<4:0>**: WDT Period Select bits

WDTCPS	WDTPS at POR				Software Control of WDTPS?
	Value	Divider Ratio		Typical Time Out (FIN = 31 kHz)	
00000	00000	1:32	2^5	1 ms	No
00001	00001	1:64	2^6	2 ms	
00010	00010	1:128	2^7	4 ms	
00011	00011	1:256	2^8	8 ms	
00100	00100	1:512	2^9	16 ms	
00101	00101	1:1024	2^{10}	32 ms	
00110	00110	1:2048	2^{11}	64 ms	
00111	00111	1:4096	2^{12}	128 ms	
01000	01000	1:8192	2^{13}	256 ms	
01001	01001	1:16384	2^{14}	512 ms	
01010	01010	1:32768	2^{15}	1 s	
01011	01011	1:65536	2^{16}	2s	
01100	01100	1:131072	2^{17}	4s	
01101	01101	1:262144	2^{18}	8s	
01110	01110	1:524299	2^{19}	16s	
01111	01111	1:1048576	2^{20}	32s	
10000	10000	1:2097152	2^{21}	64s	
10001	10001	1:4194304	2^{22}	128s	
10010	10010	1:8388608	2^{23}	256s	
10011 ... 11110	10011 ... 11110	1:32	2^5	1 ms	No
11111(1)	01011	1:65536	2^6	2s	Yes

Note 1: Default fuse – 5’b11111

REGISTER 5-4: CONFIGURATION WORD 4: MEMORY

R/W-1	U-1	R/W-1	R/W-1	R/W-1	R/W-1
LVP	—	$\overline{\text{WRTSAF}}$(1)	$\overline{\text{WRTD}}$(1)	$\overline{\text{WRTC}}$(1)	$\overline{\text{WRTB}}$(1)
bit 13	12	11	10	9	bit 8

R/W-1	U-1	U-1	R/W-1	R/W-1	R/W-1	R/W-1	R/W-1
$\overline{\text{WRTAPP}}$(1)	—	—	$\overline{\text{SAFEN}}$(1)	$\overline{\text{BBEN}}$(1)	BBSIZE2	BBSIZE1	BBSIZE0
bit 7	6	5	4	3	2	1	bit 0

Legend:			
R = Readable bit	P = Programmable bit	x = Bit is unknown	U = Unimplemented bit, read as ‘1’
‘0’ = Bit is cleared	‘1’ = Bit is set	W = Writable bit	n = Value when blank or after Bulk Erase

bit 13 **LVP:** Low Voltage Programming Enable bit
1 = Low voltage programming enabled. $\overline{\text{MCLR}}$/VPP pin function is $\overline{\text{MCLR}}$. MCLRE Configuration bit is ignored.
0 = HV on $\overline{\text{MCLR}}$/VPP must be used for programming.
The LVP bit cannot be written (to zero) while operating from the LVP programming interface. The purpose of this rule is to prevent the user from dropping out of LVP mode while programming from LVP mode, or accidentally eliminating LVP mode from the configuration state.
The preconditioned (erased) state for this bit is critical.

bit 12 **Unimplemented:** Read as ‘1’

bit 11 **$\overline{\text{WRTSAF}}$:** Storage Area Flash Write Protection bit
1 = SAF NOT write-protected
0 = SAF write-protected
Unimplemented, if SAF is not supported in the device family and only applicable if $\overline{\text{SAFEN}}$ = 0.

bit 10 **$\overline{\text{WRTD}}$:** Data EEPROM Write Protection bit
1 = Data EEPROM NOT write-protected
0 = Data EEPROM write-protected
Unimplemented if data EEPROM is not present.

bit 9 **$\overline{\text{WRTC}}$:** Configuration Register Write Protection bit
1 = Configuration Register NOT write-protected
0 = Configuration Register write-protected

bit 8 **$\overline{\text{WRTB}}$:** Boot Block Write Protection bit
1 = Boot Block NOT write-protected
0 = Boot Block write-protected
Only applicable if $\overline{\text{BBEN}}$ = 0.

bit 7 **$\overline{\text{WRTAPP}}$:** Application Block Write Protection bit
1 = Application Block NOT write-protected
0 = Application Block write-protected

bit 6-5 **Unimplemented:** Read as ‘1’.

bit 4 **$\overline{\text{SAFEN}}$:** SAF Enable bit
1 = SAF disabled
0 = SAF enabled

bit 3 **$\overline{\text{BBEN}}$:** Boot Block Enable bit
1 = Boot Block disabled
0 = Boot Block enabled

bit 2-0 **BBSIZE<2:0>:** Boot Block Size Selection bits
BBSIZE is used only when $\overline{\text{BBEN}}$ = 0
BBSIZ bits can only be written while $\overline{\text{BBEN}}$ = 1; after $\overline{\text{BBEN}}$ = 0, BBSIZ is write-protected.

Note 1: Bits are implemented as sticky bits. Once protection is enabled, it can only be reset through a Bulk Erase.

TABLE 5-1: BOOT BLOCK SIZE BITS

$\overline{\text{BBEN}}$	BBSIZE[2:0]	Actual Boot Block Size User Program Memory Size (words)			Last Boot Block Memory Access
		8k	16k	32k	
1	xxx	0	0	0	–
0	111	512	512	512	01FFh
0	110	1024	1024	1024	03FFh
0	101	2048	2048	2048	07FFh
0	100	4096	4096	4096	0FFFh
0	011	Note 1	8192	8192	1FFFh
0	010			16384	3FFFh
0	001				3FFFh
0	000				3FFFh

Note 1: The maximum boot block size is half the user program memory size. All selections higher than the maximum are set to half size. For example, all BBSIZE = 000 - 100 produce a boot block size of 4 kW on a 8 kW device.

REGISTER 5-5: CONFIGURATION WORD 5: CODE PROTECTION

U-1	U-1	U-1	U-1	U-1	U-1
—	—	—	—	—	—
bit 13					bit 8

U-1	U-1	U-1	U-1	U-1	U-1	U-1	R/P-1
—	—	—	—	—	—	—	$\overline{\text{CP}}$
bit 7							bit 0

Legend:			
R = Readable bit	P = Programmable bit	x = Bit is unknown	U = Unimplemented bit, read as ‘1’
‘0’ = Bit is cleared	‘1’ = Bit is set	W = Writable bit	n = Value when blank or after Bulk Erase

bit 13-1 **Unimplemented:** Read as ‘1’

bit 0 **$\overline{\text{CP}}$:** Program Flash Memory Code Protection bit
1 = Program Flash Memory code protection disabled
0 = Program Flash Memory code protection enabled

5.3 Code Protection

Code protection allows the device to be protected from unauthorized access. Program memory protection and data memory are controlled independently. Internal access to the program memory is unaffected by any code protection setting.

5.3.1 PROGRAM MEMORY PROTECTION

The entire program memory space is protected from external reads and writes by the $\overline{CP}$ bit in Configuration Words. When $\overline{CP}$ = 0, external reads and writes of program memory are inhibited and a read will return all '0's. The CPU can continue to read program memory, regardless of the protection bit settings. Self-writing the program memory is dependent upon the write protection setting. See **Section 5.4 "Write Protection"** for more information.

5.3.2 DATA MEMORY PROTECTION

The entire data EEPROM is protected from external reads and writes by the $\overline{WRTD}$ bit in the Configuration Words. When $\overline{WRTD}$ = 0, external reads and writes of EEPROM memory are inhibited and a read will return all '0's. The CPU can continue to read and write EEPROM memory, regardless of the protection bit settings.

5.4 Write Protection

Write protection allows the device to be protected from unintended self-writes. Applications, such as boot loader software, can be protected while allowing other regions of the program memory to be modified.

The $\overline{WRTAPP}$, $\overline{WRTSAF}$, $\overline{WRTB}$, $\overline{WRTC}$ bits in Configuration Words (Register 5-4) define whether the corresponding region of the program memory block is protected or not.

5.5 User ID

Four memory locations (8000h-8003h) are designated as ID locations where the user can store checksum or other code identification numbers. These locations are readable and writable during normal execution. See **Section 13.4.7 "NVMREG Access to Device Information Area, Device Configuration Area, User ID, Device ID and Configuration Words"** for more information on accessing these memory locations. For more information on checksum calculation, see the *"PIC16(L)F191XX Memory Programming Specification"* (DS40001880).

5.6 Device ID and Revision ID

The 14-bit Device ID word is located at 8006h and the 14-bit Revision ID is located at 8005h. These locations are read-only and cannot be erased or modified.

Development tools, such as device programmers and debuggers, may be used to read the Device ID, Revision ID and Configuration Words. These locations can also be read from the NVMCON register.

5.7 Register Definitions: Device and Revision

REGISTER 5-6: DEVID: DEVICE ID REGISTER

R	R	R	R	R	R
DEV<13:8>					
bit 13					bit 8

R	R	R	R	R	R	R	R
DEV<7:0>							
bit 7							bit 0

Legend:	
R = Readable bit	
‘1’ = Bit is set	‘0’ = Bit is cleared

bit 13-0 **DEV<13:0>:** Device ID bits

Device	DEVID<13:0> Values
PIC16F19155/56	11 0000 1001 1110 (309Eh)
PIC16LF19155/56	11 0000 1001 1111 (309Fh)
PIC16F19175/76	11 0000 1010 0000 (30A0h)
PIC16LF19175/76	11 0000 1010 0001 (30A1h)
PIC16F19185/86	11 0000 1010 0010 (30A2h)
PIC16LF19185/86	11 0000 1010 0011 (30A3h)

REGISTER 5-7: REVISIONID: REVISION ID REGISTER

R	R	R	R	R	R	R	R	R	R	R	R	R	R
1	0	MJRREV<5:0>						MNRREV<5:0>					
bit 13													bit 0

Legend:		
R = Readable bit		
‘0’ = Bit is cleared	‘1’ = Bit is set	x = Bit is unknown

bit 13-12 **Fixed Value**: Read-only bits
These bits are fixed with value ‘10’ for all devices included in this data sheet.

bit 11-6 **MJRREV<5:0>**: Major Revision ID bits
These bits are used to identify a major revision. A major revision is indicated by an all layer revision (B0, C0, etc.)

bit 5-0 **MNRREV<5:0>**: Minor Revision ID bits
These bits are used to identify a minor revision.

6.0 DEVICE INFORMATION AREA

The Device Information Area (DIA) is a dedicated region in the program memory space, it is a new feature in the PIC16(L)F19155/56/75/76/85/86 family of devices. The DIA contains the calibration data for the internal temperature indicator module, stores the Microchip Unique Identifier words and the Fixed Voltage Reference voltage readings measured in mV.

The complete DIA table is shown in Table 6-1, followed by a description of each region and its functionality. The data is mapped from 8100h to 811Fh in the PIC16(L)F19155/56/75/76/85/86 family. These locations are read-only and cannot be erased or modified. The data is programmed into the device during manufacturing.

TABLE 6-1: DEVICE INFORMATION AREA

Address Range	Name of Region	Standard Device Information
8100h-8108h	MUI0	Microchip Unique Identifier (9 Words)
	MUI1	
	MUI2	
	MUI3	
	MUI4	
	MUI5	
	MUI6	
	MUI7	
	MUI8	
8109h	MUI9	1 Word Reserved
810Ah-8111h	EUI0	Unassigned (8 Words)
	EUI1	
	EUI2	
	EUI3	
	EUI4	
	EUI5	
	EUI6	
	EUI7	
8112h	TSLR1	Unassigned (1 word) Temperature indicator ADC reading at 90°C (low-range setting)
8113h	TSLR2	
8114h	TSLR3	Unassigned(1 word)
8115h	TSHR1	Unassigned (1 word) Temperature indicator ADC reading at 90°C (high-range setting)
8116h	TSHR2	
8117h	TSHR3	Unassigned (1 Word)
8118h	FVRA1X	ADC FVR1 Output voltage for 1x setting (in mV)
8119h	FVRA2X	ADC FVR1 Output Voltage for 2x setting (in mV)
811Ah	FVRA4X(1)	ADC FVR1 Output Voltage for 4x setting (in mV)
811Bh	FVRC1X	Comparator FVR2 output voltage for 1x setting (in mV)
811Ch	FVRC2X	Comparator FVR2 output voltage for 2x setting (in mV)
811Dh	FVRC4X(1)	Comparator FVR2 output voltage for 4x setting (in mV)
811Eh-811Fh		Unassigned (1 Word)

Note 1: Value not present on LF devices.

6.1 Microchip Unique identifier (MUI)

The PIC16(L)F19155/56/75/76/85/86 devices are individually encoded during final manufacturing with a Microchip Unique Identifier, or MUI. The MUI cannot be erased by a Bulk Erase command or any other user-accessible means. This feature allows for manufacturing traceability of Microchip Technology devices in applications where this is required. It may also be used by the application manufacturer for a number of functions that require unverified unique identification, such as:

- Tracking the device
- Unique serial number

The MUI consists of nine program words. When taken together, these fields form a unique identifier. The MUI is stored in nine read-only locations, located between 8100h to 8109h in the DIA space. Table 6-1 lists the addresses of the identifier words.

Note:	For applications that require verified unique identification, contact the local Microchip Technology sales office to create a Serialized Quick Turn Programming (SQTP^{sm}) option.

6.2 External Unique Identifier (EUI)

The EUI data is stored at locations 810Ah to 8111h in the program memory region. This region is an optional space for placing application specific information. The data is coded per customer requirements during manufacturing.

Note:	Data is stored in this address range on receiving a request from the customer. The customer may contact the local sales representative, or Field Applications Engineer, and provide them the unique identifier information that is supposed to be stored in this region.

6.3 Analog-to-Digital Conversion Data of the Temperature Indicator

The purpose of the temperature indicator module is to provide a temperature-dependent voltage that can be measured by an analog module, see **Section 20.0 "Temperature Indicator Module (TIM)"**.

The DIA table contains the internal ADC measurement values of the temperature indicator for low and high range at fixed points of reference. The values are measured during test and are unique to each device. The measurement data is stored in the DIA memory region as hexadecimal numbers corresponding to the ADC conversion result. The calibration data can be used to plot the approximate sensor output voltage, V_{TSENSE} vs. Temperature curve without having to make calibration measurements in the application. For more information on the operation of the temperature indicator, refer to **Section 20.0 "Temperature Indicator Module (TIM)"**.

- **TSLR1-TSLR3**: Address 8112h to 8114h store the measurements for the low-range setting of the temperature indicator at V_{DD} = 3V.
- **TSHR1-TSHR3**: Address 8115h to 8117h store the measurements for the high-range setting of the temperature indicator at V_{DD} = 3V.
- The stored measurements are made by the device ADC using the internal V_{REF} = 2.048V.

6.4 Fixed Voltage Reference Data

The Fixed Voltage Reference, or FVR, is a stable voltage reference, independent of V_{DD}, with 1.024V, 2.048V or 4.096V selectable output levels. The output of the FVR can be configured to supply a reference voltage to the following:

- ADC input channel
- ADC positive reference
- Comparator positive input
- Digital-to-Analog Converter

For more information on the FVR, refer to **Section 18.0 "Fixed Voltage Reference (FVR)"**.

The DIA stores measured FVR voltages for this device in mV for the different buffer settings of 1x, 2x or 4x at program memory locations 8118h to 811Dh.

- FVRA1X stores the value of ADC FVR1 Output voltage for 1x setting (in mV)
- FVRA2X stores the value of ADC FVR1 Output Voltage for 2x setting (in mV)
- FVRA4X stores the value of ADC FVR1 Output Voltage for 4x setting (in mV)
- FVRC1X stores the value of Comparator FVR2 output voltage for 1x setting (in mV)
- FVRC2X stores the value of Comparator FVR2 output voltage for 2x setting (in mV)
- FVRC4X stores the value of Comparator FVR2 output voltage for 4x setting (in mV)

7.0 DEVICE CONFIGURATION INFORMATION

The Device Configuration Information (DCI) is a dedicated region in the Program Flash Memory mapped from 8200h to 821Fh. The data stored in the DCI memory is hard-coded into the device during manufacturing.

Refer to Table 7-1 for the complete DCI table address and description. The DCI holds information about the device which is useful for programming and bootloader applications. These locations are read-only and cannot be erased or modified.

TABLE 7-1: DEVICE CONFIGURATION INFORMATION FOR PIC16(L)F19155/56/75/76/85/86 FAMILY OF DEVICES

ADDRESS	Name	DESCRIPTION	VALUE	UNITS
8200h	ERSIZ	Erase Row Size	32	Words
8201h	WLSIZ	Number of write latches	32	
8202h	URSIZ	Number of User Rows	See Table 7-2	Rows
8203h	EESIZ	EE Data memory size	256	Bytes
8204h	PCNT	Pin Count	28/40/44/48	Pins

TABLE 7-2: MEMORY SIZE AND NUMBER OF USER ROWS

Part Name	Memory size	Number of User rows
PIC16(L)F19155	8k	256
PIC16(L)F19175	8k	256
PIC16(L)F19185	8k	256
PIC16(L)F19156	16k	512
PIC16(L)F19176	16k	512
PIC16(L)F19186	16k	512

7.1 DIA and DCI Access

The DIA and DCI addresses are read-only and cannot be erased or modified. See **Section 13.4.7 “NVMREG Access to Device Information Area, Device Configuration Area, User ID, Device ID and Configuration Words”** for more information on accessing these memory locations.

Development tools, such as device programmers and debuggers, may be used to read the DIA and DCI regions, similar to the Device ID and Revision ID.

8.0 RESETS AND VBAT

There are multiple ways to reset this device:

- Power-on Reset (POR)
- Brown-out Reset (BOR)
- Low-Power Brown-out Reset (LPBOR)
- $\overline{\text{MCLR}}$ Reset
- WDT Reset
- RESET instruction
- Stack Overflow
- Stack Underflow
- Programming mode exit
- Memory Violation Reset ($\overline{\text{MEMV}}$)

To allow VDD to stabilize, an optional Power-up Timer can be enabled to extend the Reset time after a BOR or POR event.

A simplified block diagram of the On-Chip Reset Circuit is shown in Figure 8-1.

8.1 VBAT

This device is equipped with a VBAT pin that allows the user to connect an external battery or an external supply. In the event of the VDD supply failing, the power source connected to the VBAT pin will keep the SOSC and RTCC modules running.

FIGURE 8-1: SIMPLIFIED BLOCK DIAGRAM OF ON-CHIP RESET CIRCUIT

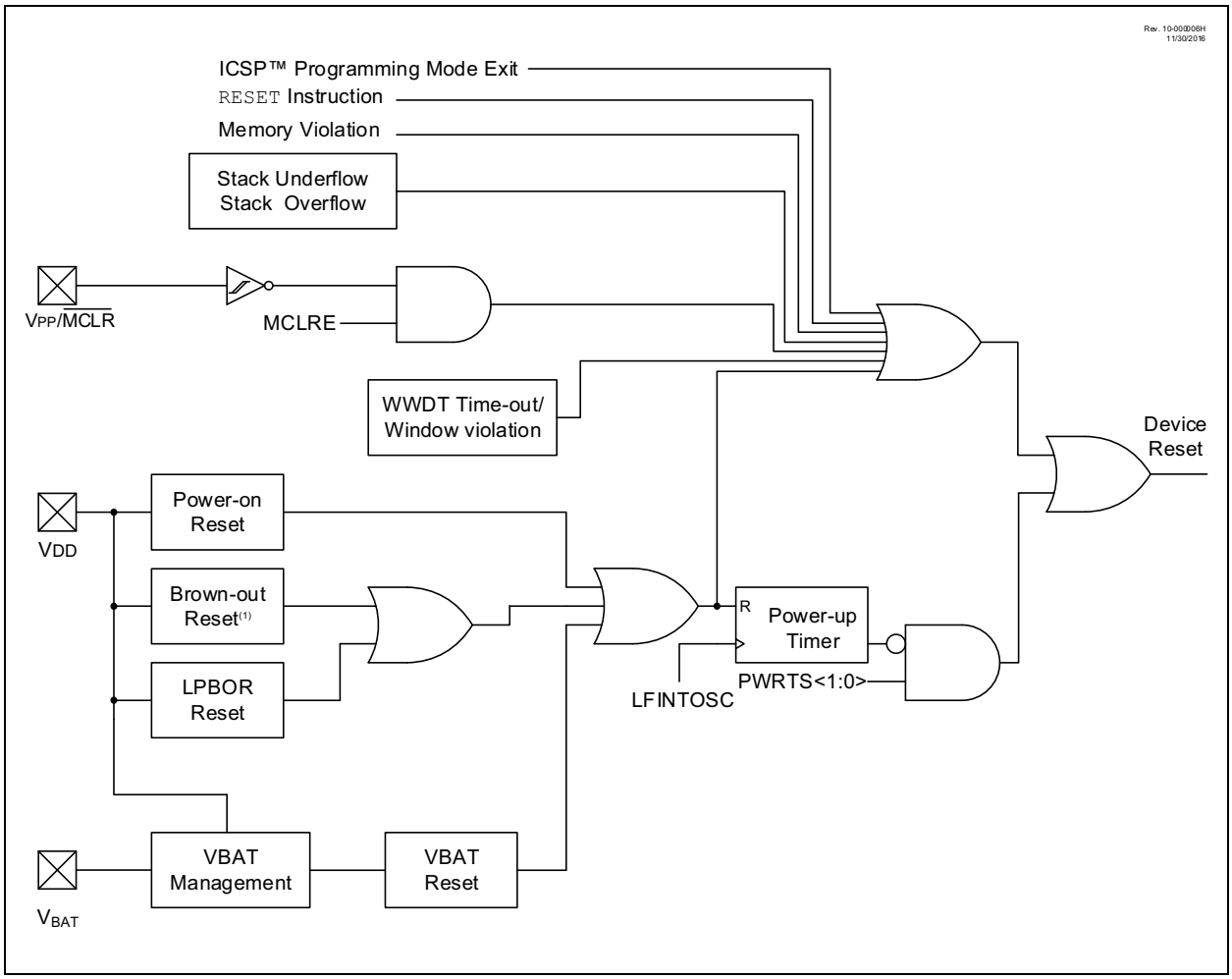

8.2 Power-on Reset (POR)

The POR circuit holds the device in Reset until VDD has reached an acceptable level for minimum operation. Slow rising VDD, fast operating speeds or analog performance may require greater than minimum VDD. The PWRT, BOR or $\overline{\text{MCLR}}$ features can be used to extend the start-up period until all device operation conditions have been met.

8.3 Brown-out Reset (BOR)

The BOR circuit holds the device in Reset when VDD reaches a selectable minimum level. Between the POR and BOR, complete voltage range coverage for execution protection can be implemented.

The Brown-out Reset module has four operating modes controlled by the BOREN<1:0> bits in Configuration Words. The four operating modes are:

- BOR is always on
- BOR is off when in Sleep
- BOR is controlled by software
- BOR is always off

Refer to Table 8-1 for more information.

The Brown-out Reset voltage level is selectable by configuring the BORV bit in Configuration Words.

A VDD noise rejection filter prevents the BOR from triggering on small events. If VDD falls below VBOR for a duration greater than parameter TBORDC, the device will reset. See Figure 8-2 for more information.

8.3.1 BOR IS ALWAYS ON

When the BOREN bits of Configuration Words are programmed to ‘11’, the BOR is always on. The device start-up will be delayed until the BOR is ready and VDD is higher than the BOR threshold.

BOR protection is active during Sleep. The BOR does not delay wake-up from Sleep.

8.3.2 BOR IS OFF IN SLEEP

When the BOREN bits of Configuration Words are programmed to ‘10’, the BOR is on, except in Sleep. The device start-up will be delayed until the BOR is ready and VDD is higher than the BOR threshold.

BOR protection is not active during Sleep. The device wake-up will be delayed until the BOR is ready.

TABLE 8-1: BOR OPERATING MODES

BOREN<1:0>	SBOREN	Device Mode	BOR Mode	Instruction Execution upon: Release of POR or Wake-up from Sleep
11	x	X	Active	Wait for release of BOR(1) (BORRDY = 1)
10	x	Awake	Active	Waits for release of BOR (BORRDY = 1) Waits for BOR Reset release
		Sleep	Disabled	
01	1	X	Active	Waits for BOR Reset release (BORRDY = 1)
	0	X	Disabled	Begins immediately (BORRDY = x)
00	x	X	Disabled	

Note 1: In this specific case, “Release of POR” and “Wake-up from Sleep”, there is no delay in start-up. The BOR ready flag, (BORRDY = 1), will be set before the CPU is ready to execute instructions because the BOR circuit is forced on by the BOREN<1:0> bits.

8.3.3 BOR CONTROLLED BY SOFTWARE

When the BOREN bits of Configuration Words are programmed to '01', the BOR is controlled by the SBOREN bit of the BORCON register. The device start-up is not delayed by the BOR ready condition or the VDD level.

BOR protection begins as soon as the BOR circuit is ready. The status of the BOR circuit is reflected in the BORRDY bit of the BORCON register.

BOR protection is unchanged by Sleep.

8.3.4 BOR IS ALWAYS OFF

When the BOREN bits of the Configuration Words are programmed to '00', the BOR is off at all times. The device start-up is not delayed by the BOR ready condition or the VDD level.

FIGURE 8-2: BROWN-OUT SITUATIONS

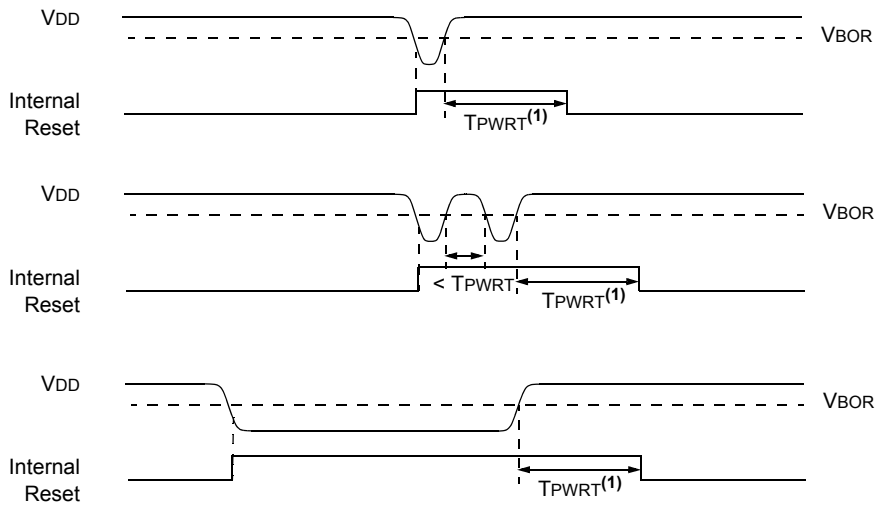

Note 1: TPWRT delay only if $\overline{\text{PWRTE}}$ bit is programmed to '0'.

8.4 Register Definitions: Brown-out Reset Control

REGISTER 8-1: BORCON: BROWN-OUT RESET CONTROL REGISTER

R/W-1/u	U-0	U-0	U-0	U-0	U-0	U-0	R-q/u
SBOREN(1)	—	—	—	—	—	—	BORRDY
bit 7							bit 0

Legend:		
R = Readable bit	W = Writable bit	U = Unimplemented bit, read as '0'
u = Bit is unchanged	x = Bit is unknown	-n/n = Value at POR and BOR/Value at all other Resets
'1' = Bit is set	'0' = Bit is cleared	q = Value depends on condition

bit 7 **SBOREN:** Software Brown-out Reset Enable bit(1)
If BOREN <1:0> in Configuration Words ≠ 01:
SBOREN is read/write, but has no effect on the BOR.
If BOREN <1:0> in Configuration Words = 01:
1 = BOR Enabled
0 = BOR Disabled

bit 6-1 **Unimplemented:** Read as '0'

bit 0 **BORRDY:** Brown-out Reset Circuit Ready Status bit
1 = The Brown-out Reset circuit is active
0 = The Brown-out Reset circuit is inactive

Note 1: BOREN<1:0> bits are located in Configuration Words.

8.5 Low-Power Brown-out Reset (LPBOR)

The Low-Power Brown-out Reset (LPBOR) is an essential part of the Rest subsystem. Refer to Figure 8-1 to see how the BOR interacts with other modules.

The LPBOR is used to monitor the external VDD pin. when too low of a voltage is detected, the device is held in Reset. When this occurs, a register bit ($\overline{BOR}$) is changed to indicate that a BOR Reset has occurred. The same bit is set for both the BOR and the LPBOR. Refer to Register 8-2.

8.5.1 ENABLING LPBOR

The LPBOR is controlled by the $\overline{LPBOR}$ bit of the Configuration Word (Register 5-1). When the device is erased, the LPBOR module defaults to disabled.

8.5.2 LPBOR MODULE OUTPUT

The output of the LPBOR module is a signal indicating whether or not a Reset is to be asserted. This signal is OR'd together with the Reset signal of the BOR module to provide the generic $\overline{BOR}$ signal, which goes to the PCON register and to the power control block.

8.6 $\overline{MCLR}$

The $\overline{MCLR}$ is an optional external input that can reset the device. The $\overline{MCLR}$ function is controlled by the MCLRE bit of Configuration Words and the LVP bit of Configuration Words (Table 8-2).

TABLE 8-2: $\overline{MCLR}$ CONFIGURATION

MCLRE	LVP	$\overline{MCLR}$
0	0	Disabled
1	0	Enabled
x	1	Enabled

8.6.1 $\overline{MCLR}$ ENABLED

When $\overline{MCLR}$ is enabled and the pin is held low, the device is held in Reset. The $\overline{MCLR}$ pin is connected to VDD through an internal weak pull-up.

The device has a noise filter in the $\overline{MCLR}$ Reset path. The filter will detect and ignore small pulses.

Note: A Reset does not drive the $\overline{MCLR}$ pin low.

8.6.2 $\overline{MCLR}$ DISABLED

When $\overline{MCLR}$ is disabled, the pin functions as a general purpose input and the internal weak pull-up is under software control. See **Section 14.1 "I/O Priorities"** for more information.

8.7 Windowed Watchdog Timer (WWDT) Reset

The Watchdog Timer generates a Reset if the firmware does not issue a `CLRWDT` instruction within the time-out period and the window is open. The $\overline{TO}$ and $\overline{PD}$ bits in the STATUS register and the $\overline{WDT}$ bit in PCON are changed to indicate a WDT Reset caused by the timer overflowing, and WDTWV bit in the PCON register is changed to indicate a WDT Reset caused by a window violation. See **Section 12.0 "Windowed Watchdog Timer (WWDT)"** for more information.

8.8 `RESET` Instruction

A `RESET` instruction will cause a device Reset. The $\overline{RI}$ bit in the PCON register will be set to '0'. See Table 8-4 for default conditions after a `RESET` instruction has occurred.

8.9 Stack Overflow/Underflow Reset

The device can reset when the Stack Overflows or Underflows. The STKOVF or STKUNF bits of the PCON register indicate the Reset condition. These Resets are enabled by setting the STVREN bit in Configuration Words. See **Section 4.5.2 "Overflow/Underflow Reset"** for more information.

8.10 Programming Mode Exit

Upon exit of In-Circuit Serial Programming™ (ICSP™) mode, the device will behave as if a POR had just occurred (the device does not reset upon run time self-programming/erase operations).

8.11 Power-up Timer

The Power-up Timer optionally delays device execution after a BOR or POR event. This timer is typically used to allow VDD to stabilize before allowing the device to start running.

The Power-up Timer is controlled by the $\overline{PWRTE}$ bit of the Configuration Words.

The Power-up Timer provides a nominal 64 ms time out on POR or Brown-out Reset. The device is held in Reset as long as PWRT is active. The PWRT delay allows additional time for the VDD to rise to an acceptable level. The Power-up Timer is enabled by clearing the $\overline{PWRTE}$ bit in the Configuration Words. The Power-up Timer starts after the release of the POR and BOR. For additional information, refer to Application Note AN607, "*Power-up Trouble Shooting*" (DS00607).

8.12 Start-up Sequence

Upon the release of a POR or BOR, the following must occur before the device will begin executing:

1. Power-up Timer runs to completion (if enabled).
2. Oscillator start-up timer runs to completion (if required for oscillator source).
3. $\overline{\text{MCLR}}$ must be released (if enabled).

The total time-out will vary based on oscillator configuration and Power-up Timer Configuration. See **Section 9.0 "Oscillator Module (with Fail-Safe Clock Monitor)"** for more information.

The Power-up Timer runs independently of $\overline{\text{MCLR}}$ Reset. If $\overline{\text{MCLR}}$ is kept low long enough, the Power-up Timer and oscillator start-up timer will expire. This is useful for testing purposes or to synchronize more than one device operating in parallel.

8.13 Memory Execution Violation

A memory execution violation Reset occurs if executing an instruction fetched from outside the valid execution area. There are different cases that define the Valid Execution area. If Storage Area Flash (SAF) is enabled (**Section 4.2.2 "Boot Block"**), the SAF area (Table 4-2) is not available for program execution.

Table 4-1 shows the addresses available on a device variant based on user Flash size. Execution outside this region generates a memory execution violation.

Prefetched instructions that are not executed do not cause memory execution violations. For example, a `GOTO` instruction in the last memory location will prefetch from an invalid location; this is not an error. If an instruction from an invalid location tries to execute, the memory violation is generated immediately, and any concurrent interrupt requests are not honored. When a memory execution violation is generated, the device is reset and flag $\overline{\text{MEMV}}$ is cleared in PCON1 (Register 8-3) to signal the cause. The flag needs to be set in code after a memory execution violation.

FIGURE 8-3: RESET START-UP SEQUENCE

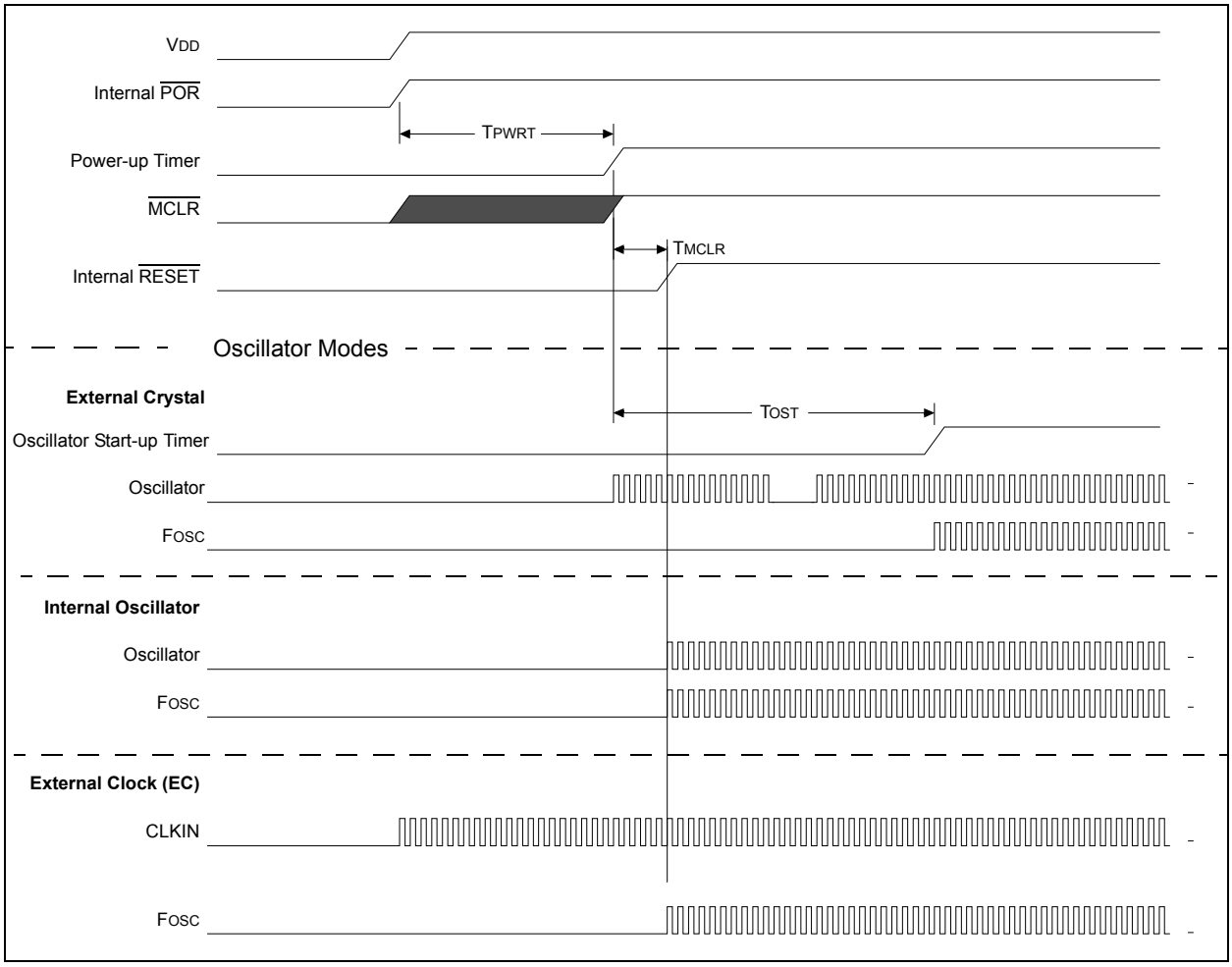

8.14 Determining the Cause of a Reset

Upon any Reset, multiple bits in the STATUS and PCON register are updated to indicate the cause of the Reset. Table 8-3 and Table 8-4 show the Reset conditions of these registers.

TABLE 8-3: RESET STATUS BITS AND THEIR SIGNIFICANCE

STKOVF	STKUNF	$\overline{\text{RWDT}}$	$\overline{\text{RMCLR}}$	$\overline{\text{RI}}$	$\overline{\text{POR}}$	$\overline{\text{BOR}}$	$\overline{\text{TO}}$	$\overline{\text{PD}}$	$\overline{\text{MEMV}}$	$\overline{\text{VBATBOR}}$	Condition
0	0	1	1	1	0	x	1	1	1	x	Power-on Reset
0	0	1	1	1	0	x	0	x	u	x	Illegal, $\overline{\text{TO}}$ is set on $\overline{\text{POR}}$
0	0	1	1	1	0	x	x	0	u	x	Illegal, $\overline{\text{PD}}$ is set on $\overline{\text{POR}}$
0	0	u	1	1	u	0	1	1	u	1	Brown-out Reset
u	u	0	u	u	u	u	0	u	u	u	WWDT Reset
u	u	u	u	u	u	u	0	0	u	u	WWDT Wake-up from Sleep
u	u	u	u	u	u	u	1	0	u	u	Interrupt Wake-up from Sleep
u	u	u	0	u	u	u	u	u	1	u	$\overline{\text{MCLR}}$ Reset during normal operation
u	u	u	0	u	u	u	1	0	u	u	$\overline{\text{MCLR}}$ Reset during Sleep
u	u	u	u	0	u	u	u	u	u	u	RESET Instruction Executed
1	u	u	u	u	u	u	u	u	u	u	Stack Overflow Reset (STVREN = 1)
u	1	u	u	u	u	u	u	u	u	u	Stack Underflow Reset (STVREN = 1)
u	u	u	u	u	u	u	u	u	0	x	Memory Violation Reset ($\overline{\text{MEMV}}$ = 0)
0	0	x	1	1	1	1	1	1	1	0	Brown-out Reset on VBAT

TABLE 8-4: RESET CONDITION FOR SPECIAL REGISTERS

Condition	Program Counter	STATUS Register	PCON0 Register	PCON1 Register
Power-on Reset	0000h	---1 1000	0011 110x	uuuu uuu1
$\overline{\text{MCLR}}$ Reset during normal operation	0000h	---u uuuu	uuuu 0uuu	uuuu uuu1
$\overline{\text{MCLR}}$ Reset during Sleep	0000h	---1 0uuu	uuuu 0uuu	uuuu uuu1
WWDT Reset	0000h	---0 uuuu	uuu0 uuuu	uuuu uuu1
WWDT Wake-up from Sleep	PC + 1	---0 0uuu	uuuu uuuu	uuuu uuu1
WWDT Window Violation	0000h	---u uuuu	uu0u uuuu	uuuu uuu1
Brown-out Reset	0000h	---1 1000	0011 11u0	uuuu uuu1
Interrupt Wake-up from Sleep	PC + 1(1)	---1 0uuu	uuuu uuuu	uuuu uuu1
RESET Instruction Executed	0000h	---u uuuu	uuuu u0uu	uuuu uuu1
Stack Overflow Reset (STVREN = 1)	0000h	---u uuuu	1uuu uuuu	uuuu uuu1
Stack Underflow Reset (STVREN = 1)	0000h	---u uuuu	u1uu uuuu	uuuu uuu1
Memory Violation Reset ($\overline{\text{MEMV}}$ = 0)	0000h	---u uuuu	uuuu uuuu	uuuu uuu1
VBAT Brown-Out Reset	0000h	---1 1000	0011 11u0	uuuu uuu0

Legend: u = unchanged, x = unknown, - = unimplemented bit, reads as '0'.

Note 1: When the wake-up is due to an interrupt and Global Enable bit (GIE) is set, the return address is pushed on the stack and PC is loaded with the interrupt vector (0004h) after execution of PC + 1.

8.15 Power Control (PCON) Registers

The Power Control (PCON) registers contain flag bits to differentiate between a:

- Power-on Reset ($\overline{\text{POR}}$)
- Brown-out Reset ($\overline{\text{BOR}}$)
- Reset Instruction Reset ($\overline{\text{RI}}$)
- $\overline{\text{MCLR}}$ Reset ($\overline{\text{RMCLR}}$)
- Watchdog Timer Reset ($\overline{\text{RWDT}}$)
- Watchdog Timer Window Violation Reset ($\overline{\text{WDTWV}}$)
- Stack Underflow Reset (STKUNF)
- Stack Overflow Reset (STKOVF)
- Memory Violation Reset ($\overline{\text{MEMV}}$)
- V_{BAT} Reset ($\overline{\text{VBATBOR}}$)

The PCON0 register bits are shown in Register 8-2.

The PCON1 register bits are shown in Register 8-3.

Hardware will change the corresponding register bit during the Reset process; if the Reset was not caused by the condition, the bit remains unchanged (Table 8-4).

Software should reset the bit to the inactive state after the restart (hardware will not reset the bit).

Software may also set any PCON bit to the active state, so that user code may be tested, but no reset action will be generated.

All bits in PCON1 and PCON0 will maintain their state when either V_{DD} or V_{BAT} is powered.

8.16 Register Definitions: Power Control

REGISTER 8-2: PCON0: POWER CONTROL REGISTER 0

R/W/HS-0/q	R/W/HS-0/q	R/W/HC-1/q	R/W/HC-1/q	R/W/HC-1/q	R/W/HC-1/q	R/W/HC-q/u	R/W/HC-q/u
STKOVF	STKUNF	$\overline{\text{WDTWV}}$	$\overline{\text{RWDT}}$	$\overline{\text{RMCLR}}$	$\overline{\text{RI}}$	$\overline{\text{POR}}$	$\overline{\text{BOR}}$
bit 7							bit 0

Legend:		
HC = Bit is cleared by hardware		HS = Bit is set by hardware
R = Readable bit	W = Writable bit	U = Unimplemented bit, read as ‘0’
u = Bit is unchanged	x = Bit is unknown	-m/n = Value at POR and BOR/Value at all other Resets
‘1’ = Bit is set	‘0’ = Bit is cleared	q = Value depends on condition

bit 7 **STKOVF:** Stack Overflow Flag bit
1 = A Stack Overflow occurred
0 = A Stack Overflow has not occurred or cleared by firmware

bit 6 **STKUNF:** Stack Underflow Flag bit
1 = A Stack Underflow occurred
0 = A Stack Underflow has not occurred or cleared by firmware

bit 5 **$\overline{\text{WDTWV}}$:** WDT Window Violation Flag bit
1 = A WDT Window Violation Reset has not occurred or set to ‘1’ by firmware
0 = A WDT Window Violation Reset has occurred (a CLRWDT instruction was executed either without arming the window or outside the window (cleared by hardware)

bit 4 **$\overline{\text{RWDT}}$:** Watchdog Timer Reset Flag bit
1 = A Watchdog Timer Reset has not occurred or set to ‘1’ by firmware
0 = A Watchdog Timer Reset has occurred (cleared by hardware)

bit 3 **$\overline{\text{RMCLR}}$:** $\overline{\text{MCLR}}$ Reset Flag bit
1 = A $\overline{\text{MCLR}}$ Reset has not occurred or set to ‘1’ by firmware
0 = A $\overline{\text{MCLR}}$ Reset has occurred (cleared by hardware)

bit 2 **$\overline{\text{RI}}$:** RESET Instruction Flag bit
1 = A RESET instruction has not been executed or set to ‘1’ by firmware
0 = A RESET instruction has been executed (cleared by hardware)

bit 1 **$\overline{\text{POR}}$:** Power-on Reset Status bit
1 = No Power-on Reset occurred
0 = A Power-on Reset occurred (must be set in software after a Power-on Reset occurs)

bit 0 **$\overline{\text{BOR}}$:** Brown-out Reset Status bit
1 = No Brown-out Reset occurred
0 = A Brown-out Reset occurred (must be set in software after a Power-on Reset or Brown-out Reset occurs)

REGISTER 8-3: PCON1: POWER CONTROL REGISTER 1

U-0	U-0	U-0	U-0	U-0	U-0	R/W/HC-1/u	R/W/HC-q/u
—	—	—	—	—	—	$\overline{\text{MEMV}}$	$\overline{\text{VBATBOR}}$
bit 7							bit 0

Legend:		
HC = Bit is cleared by hardware		HS = Bit is set by hardware
R = Readable bit	W = Writable bit	U = Unimplemented bit, read as ‘0’
u = Bit is unchanged	x = Bit is unknown	-m/n = Value at POR and BOR/Value at all other Resets
‘1’ = Bit is set	‘0’ = Bit is cleared	q = Value depends on condition

bit 7-2 **Unimplemented:** Read as ‘0’.

bit 1 **$\overline{\text{MEMV}}$:** Memory Violation Flag bit
1 = No Memory Violation Reset occurred or set to ‘1’ by firmware
0 = A Memory Violation Reset occurred (set ‘0’ in hardware when a Memory Violation occurs)

bit 0 **$\overline{\text{VBATBOR}}$:** VBAT Brown-Out Reset Status Bit
1 = No VBAT Brown-out Reset occurred.
0 = A VBAT Brown-out Reset occurred.

8.17 VBAT System

The VBAT subsystem allows the RTCC and SOSC to run from a battery connected to the VBAT pin in the event of a VDD failure. Typically, the battery is a 3V coin cell, however the system is designed to operate over the entire VDD voltage range. If VDD is greater than VBAT, the RTCC and SOSC will be powered by VDD. If VDD is less than VBAT, the RTCC and SOSC will switch over to VBAT. See Table 4-5 and Table 4-8 for more information on the VBAT registers.

> **Note:** It should be noted that in this second scenario, VDD may still be in the valid operating range, but anytime the VDD drops below VBAT, the RTCC and SOSC will switch over to VBAT. This means that in a system with a 3V battery and a 2.8V VDD, the RTCC and SOSC will run off VBAT even when VDD is present.

8.17.1 VBAT GPR SEMAPHORE REGISTERS

The VBAT voltage domain offers the user four registers: VB0GPR, VB1GPR, VB3GPR and VB4GPR. These registers can be used by firmware to write any information that needs to survive a VDD failure. As long as either VDD or VBAT is valid, these registers will hold the last value written.

TABLE 8-5: VDD VS. VBAT

VDD	VBAT	Description
>VBOR	>VBOR	• If VDD > VBAT, then all active modules operate on VDD. If VBAT > VDD, then RTCC and SOSC operate on Vbat and all other active modules operate on VDD. • $\overline{\text{VBATBOR}}$ bit in PCON1 unchanged • $\overline{\text{BOR}}$ bit in PCON0 unchanged
>VBOR	<VBOR	• All active modules operate on VDD • $\overline{\text{VBATBOR}}$ bit in PCON1 unchanged • $\overline{\text{BOR}}$ bit in PCON0 unchanged
<VBOR	>VBOR	• The RTCC, SOSC operate on VBAT • All other modules are held in Reset • $\overline{\text{VBATBOR}}$ bit in PCON1 unchanged • Clear $\overline{\text{BOR}}$ bit in PCON0 to indicate VDDBOR
<VBOR	<VBOR	• All modules are held in Reset. • The $\overline{\text{VBATBOR}}$ bit in PCON1 cleared to indicate $\overline{\text{VBATBOR}}$ • The $\overline{\text{BOR}}$ bit in PCON0 cleared to indicate VDDBOR

TABLE 8-6: SUMMARY OF REGISTERS ASSOCIATED WITH RESETS

Name	Bit 7	Bit 6	Bit 5	Bit 4	Bit 3	Bit 2	Bit 1	Bit 0	Register on Page
BORCON	SBOREN	—	—	—	—	—	—	BORRDY	135
PCON0	STKOVF	STKUNF	$\overline{\text{WDTWV}}$	$\overline{\text{RWDT}}$	$\overline{\text{RMCLR}}$	$\overline{\text{RI}}$	$\overline{\text{POR}}$	$\overline{\text{BOR}}$	140
PCON1	—	—	—	—	—	—	$\overline{\text{MEMV}}$	$\overline{\text{VBATBOR}}$	141
STATUS	—	—	—	$\overline{\text{TO}}$	$\overline{\text{PD}}$	Z	DC	C	50
WDTCON0	—	—	WDTPS<4:0>					SWDTEN	196
VB0GPR	VB0GPR								
VB1GPR	VB1GPR								
VP2GPR	VP2GPR								
VP3GPR	VP3GPR								

Legend: — = unimplemented location, read as '0'. Shaded cells are not used by Resets.

9.0 OSCILLATOR MODULE (WITH FAIL-SAFE CLOCK MONITOR)

9.1 Overview

The oscillator module has a wide variety of clock sources and selection features that allow it to be used in a wide range of applications while maximizing performance and minimizing power consumption. Figure 9-1 illustrates a block diagram of the oscillator module.

Clock sources can be supplied from external oscillators. In addition, the system clock source can be supplied from one of two internal oscillators and PLL circuits, with a choice of speeds selectable via software. Additional clock features include:

- Selectable system clock source between external or internal sources via software.
- Fail-Safe Clock Monitor (FSCM) designed to detect a failure of the external clock source (ECH, ECM, ECL) and switch automatically to the internal oscillator.
- Oscillator Start-up Timer (OST) ensures stability of SOSC.

The RSTOSC bits of Configuration Word 1 determine the type of oscillator that will be used when the device is reset, including when it is first powered up.

The internal clock configuration, LFINTOSC, HFINTOSC (set at 1 MHz), or HFINTOSC (set at 32 MHz) can be set through the RSTOSC bits.

If an external clock source is selected, the FEXTOSC bits of Configuration Word 1 must be used to select the external clock mode.

The external oscillator module can be configured in one of the following clock modes, by setting the FEXTOSC<2:0> bits of Configuration Word 1:

1. ECL – External Clock Low-Power mode
   ECL<= 500 kHz
2. ECM – External Clock Medium Power mode
   ECM <= 8 MHz
3. ECH – External Clock High-Power mode
   ECH <= 32 MHz

The ECH, ECM, and ECL Clock modes rely on an external logic level signal as the device clock source. Each mode is optimized for a different frequency range.

The INTOSC internal oscillator block produces low and high-frequency clock sources, designated LFINTOSC and HFINTOSC. (see Internal Oscillator Block, Figure 9-1). A wide selection of device clock frequencies may be derived from these clock sources.

FIGURE 9-1: SIMPLIFIED PIC® MCU CLOCK SOURCE BLOCK DIAGRAM

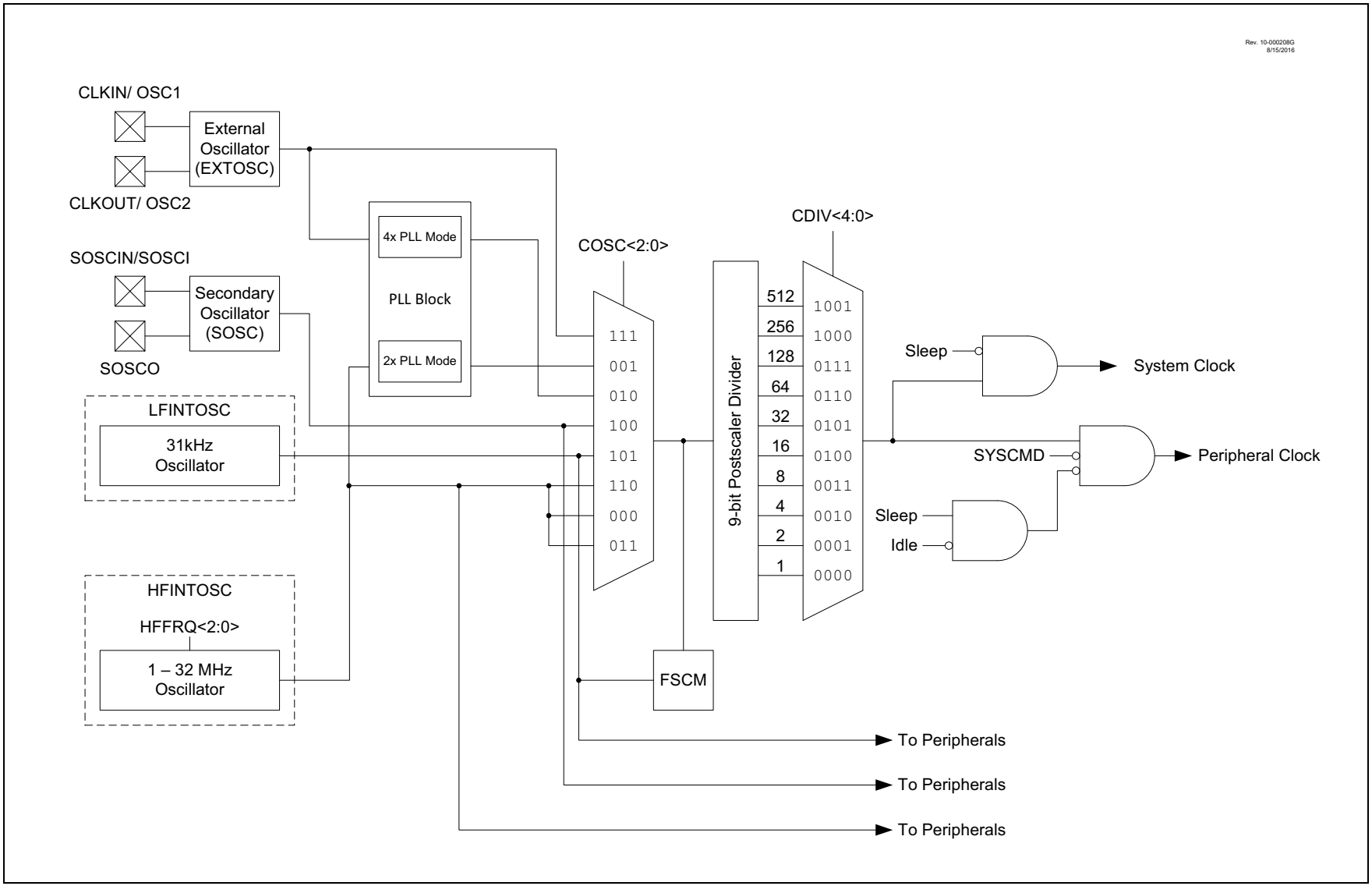

© 2017-2019 Microchip Technology Inc.

9.2 Clock Source Types

Clock sources can be classified as external or internal.

External clock sources rely on external circuitry for the clock source to function. Examples are: oscillator modules (ECH, ECM, ECL mode).

Internal clock sources are contained within the oscillator module. The internal oscillator block has two internal oscillators and a dedicated Phase Lock Loop (PLL) that are used to generate internal system clock sources. The High-Frequency Internal Oscillator (HFINTOSC) can produce a range from 1 to 32 MHz. The Low-Frequency Internal Oscillator (LFINTOSC) generates a 31 kHz frequency. The external oscillator block can also be used with the PLL.

The system clock can be selected between external or internal clock sources via the NOSC bits in the OSCCON1 register. See **Section 9.3 "Clock Switching"** for additional information.

9.2.1 EXTERNAL CLOCK SOURCES

An external clock source can be used as the device system clock by performing one of the following actions:

- Program the RSTOSC<2:0> bits in the Configuration Words to select an external clock source that will be used as the default system clock upon a device Reset
- Write the NOSC<2:0> and NDIV<3:0> bits in the OSCCON1 register to switch the system clock source

See **Section 9.3 "Clock Switching"** for more information.

9.2.1.1 EC Mode

The External Clock (EC) mode allows an externally generated logic level signal to be the system clock source. When operating in this mode, an external clock source is connected to the CLKIN input. CLKOUT is available for general purpose I/O or CLKOUT. Figure 9-2 shows the pin connections for EC mode.

EC mode has three power modes to select from through Configuration Words:

- ECH – High power, < = 32 MHz
- ECM – Medium power, < = 8 MHz
- ECL – Low power, < = 0.5 MHz

The Oscillator Start-up Timer (OST) is disabled when EC mode is selected. Therefore, there is no delay in operation after a Power-on Reset (POR) or wake-up from Sleep. Because the PIC® MCU design is fully static, stopping the external clock input will have the effect of halting the device while leaving all data intact. Upon restarting the external clock, the device will resume operation as if no time had elapsed.

FIGURE 9-2: EXTERNAL CLOCK (EC) MODE OPERATION

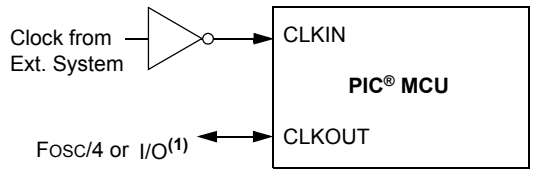

Note 1: Output depends upon $\overline{\text{CLKOUTEN}}$ bit of the Configuration Words.

9.2.1.2 Secondary Oscillator

The secondary oscillator is a separate oscillator block that can be used as an alternate system clock source. The secondary oscillator is optimized for 32.768 kHz, and can be used with an external crystal oscillator connected to the SOSCI and SOSCO device pins, or an external clock source connected to the SOSCI pin. Refer to **Section 9.3 "Clock Switching"** for more information.

FIGURE 9-3: QUARTZ CRYSTAL OPERATION (SECONDARY OSCILLATOR)

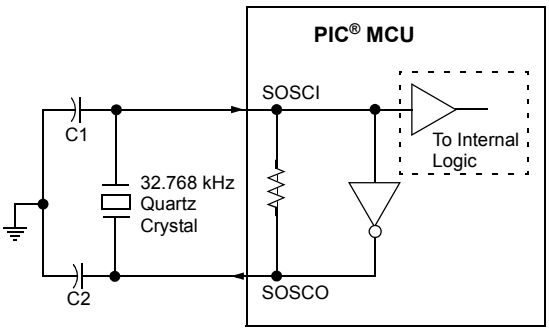

9.2.2 INTERNAL CLOCK SOURCES

The device may be configured to use an internal oscillator block as the system clock by performing one of the following actions:

- Program the RSTOSC<2:0> bits in Configuration Words to select the INTOSC clock source, which will be used as the default system clock upon a device Reset.
- Write the NOSC<2:0> bits in the OSCCON1 register to switch the system clock source to the internal oscillator during run-time. See **Section 9.3 "Clock Switching"** for more information.

In **INTOSC** mode, CLKIN is available for general purpose I/O. CLKOUT is available for general purpose I/O or CLKOUT.

The function of the CLKOUT pin is determined by the $\overline{\text{CLKOUTEN}}$ bit in Configuration Words.

The internal oscillator block has two independent oscillators that can produce two internal system clock sources.

1. The **HFINTOSC** (High-Frequency Internal Oscillator) is factory calibrated and operates up to 32 MHz. The frequency of HFINTOSC can be selected through the OSCFRQ Frequency Selection register, and fine-tuning can be done via the OSCTUNE register.
2. The **LFINTOSC** (Low-Frequency Internal Oscillator) is factory-calibrated and operates at 31 kHz.

9.2.2.1 HFINTOSC

The High-Frequency Internal Oscillator (HFINTOSC) is a precision digitally-controlled internal clock source that produces a stable clock up to 32 MHz. The HFINTOSC can be enabled through one of the following methods:

- Programming the RSTOSC<2:0> bits in Configuration Word 1 to '110' (1 MHz) or '000' (32 MHz) to set the oscillator upon device Power-up or Reset.
- Write to the NOSC<2:0> bits of the OSCCON1 register during run-time.

The HFINTOSC frequency can be selected by setting the HFFRQ<2:0> bits of the OSCFRQ register.

The MFINTOSC is an internal clock source within the HFINTOSC that provides two (500 kHz, 32 kHz) constant clock outputs. These constant clock outputs are available for selection to various peripherals, internally.

The NDIV<3:0> bits of the OSCCON1 register allow for division of the HFINTOSC output from a range between 1:1 and 1:512.

9.2.2.2 Internal Oscillator Frequency Adjustment

The internal oscillator is factory-calibrated. This internal oscillator can be adjusted in software by writing to the OSCTUNE register (Register 9-7).

The default value of the OSCTUNE register is 00h. The value is a 6-bit two's complement number. A value of 1Fh will provide an adjustment to the maximum frequency. A value of 20h will provide an adjustment to the minimum frequency.

When the OSCTUNE register is modified, the oscillator frequency will begin shifting to the new frequency. Code execution continues during this shift. There is no indication that the shift has occurred.

OSCTUNE does not affect the LFINTOSC frequency. Operation of features that depend on the LFINTOSC clock source frequency, such as the Power-up Timer (PWRT), Watchdog Timer (WWDT), Fail-Safe Clock Monitor (FSCM) and peripherals, are *not* affected by the change in frequency.

9.2.2.3 LFINTOSC

The Low-Frequency Internal Oscillator (LFINTOSC) is a factory calibrated 31 kHz internal clock source.

The LFINTOSC is the frequency for the Power-up Timer (PWRT), Watchdog Timer (WWDT) and Fail-Safe Clock Monitor (FSCM).

The LFINTOSC is enabled through one of the following methods:

- Programming the RSTOSC<2:0> bits of Configuration Word 1 to enable LFINTOSC.
- Write to the NOSC<2:0> bits of the OSCCON1 register.

Peripherals that use the LFINTOSC are:

- Power-up Timer (PWRT)
- Windowed Watchdog Timer (WWDT)
- Timer0
- Timer1
- Timer2
- Fail-Safe Clock Monitor (FSCM)
- Configurable Cell Logic (CLC)
- Signal Measurement Timer (SMT)
- Liquid Crystal Display (LCD) Controller

9.2.2.4 Oscillator Status and Manual Enable

The 'ready' status of each oscillator is displayed in the OSCSTAT register (Register 9-4). The oscillators can also be manually enabled through the OSCEN register (Register 9-5). Manual enabling makes it possible to verify the operation of the EXTOSC or SOSC crystal oscillators. This can be achieved by enabling the selected oscillator, then watching the corresponding 'ready' state of the oscillator in the OSCSTAT register.

9.3 Clock Switching

The system clock source can be switched between external and internal clock sources via software using the New Oscillator Source (NOSC) and New Divider selection request (NDIV) bits of the OSCCON1 register.

9.3.1 NEW OSCILLATOR SOURCE (NOSC) AND NEW DIVIDER SELECTION REQUEST (NDIV) BITS

The New Oscillator Source (NOSC) and New Divider selection request (NDIV) bits of the OSCCON1 register select the system clock source and the frequency that are used for the CPU and peripherals.

When new values of NOSC and NDIV are written to OSCCON1, the current oscillator selection will continue to operate while waiting for the new clock source to indicate that it is stable and ready. In some cases, the newly requested source may already be in use, and is ready immediately. In the case of a divider-only change, the new and old sources are the same, and will be immediately ready. The device may enter Sleep while waiting for the switch as described in **Section 9.3.3 "Clock Switch and Sleep"**.

When the new oscillator is ready, the New Oscillator is Ready (NOSCR) bit of OSCCON3 and the Clock Switch Interrupt Flag (CSWIF) bit of PIR1 become set (CSWIF = 1). If Clock Switch Interrupts are enabled (CSWIE = 1), an interrupt will be generated at that time. The Oscillator Ready (ORDY) bit of OSCCON3 can also be polled to determine when the oscillator is ready in lieu of an interrupt.

If the Clock Switch Hold (CSWHOLD) bit of OSCCON3 is clear, the oscillator switch will occur when the new Oscillator's READY bit (NOSCR) is set, and the interrupt (if enabled) will be serviced at the new oscillator setting.

If CSWHOLD is set, the oscillator switch is suspended, while execution continues using the current (old) clock source. When the NOSCR bit is set, software should:

- set CSWHOLD = 0 so the switch can complete, or
- copy COSC into NOSC to abandon the switch.

If Doze is in effect, the switch occurs on the next clock cycle, whether or not the CPU is operating during that cycle.

Changing the clock post-divider without changing the clock source (e.g., changing FOSC from 1 MHz to 2 MHz) is handled in the same manner as a clock source change, as described previously. The clock source will already be active, so the switch is relatively quick. CSWHOLD must be clear (CSWHOLD = 0) for the switch to complete.

The current COSC and CDIV are indicated in the OSCCON2 register up to the moment when the switch actually occurs, at which time OSCCON2 is updated and ORDY is set. NOSCR is cleared by hardware to indicate that the switch is complete.

9.3.2 PLL INPUT SWITCH

Switching between the PLL and any non-PLL source is managed as described above. The input to the PLL is established when NOSC selects the PLL, and maintained by the COSC setting.

When NOSC and COSC select the PLL with different input sources, the system continues to run using the COSC setting, and the new source is enabled per NOSC. When the new oscillator is ready (and CSWHOLD = 0), system operation is suspended while the PLL input is switched and the PLL acquires lock.

Note:	If the PLL fails to lock, the FSCM will trigger.

9.3.3 CLOCK SWITCH AND SLEEP

If OSCCON1 is written with a new value and the device is put to Sleep before the switch completes, the switch will not take place and the device will enter Sleep mode.

When the device wakes from Sleep and the CSWHOLD bit is clear, the device will wake with the 'new' clock active, and the clock switch interrupt flag bit (CSWIF) will be set.

When the device wakes from Sleep and the CSWHOLD bit is set, the device will wake with the 'old' clock active and the new clock will be requested again.

FIGURE 9-4: CLOCK SWITCH (CSWHOLD = 0)

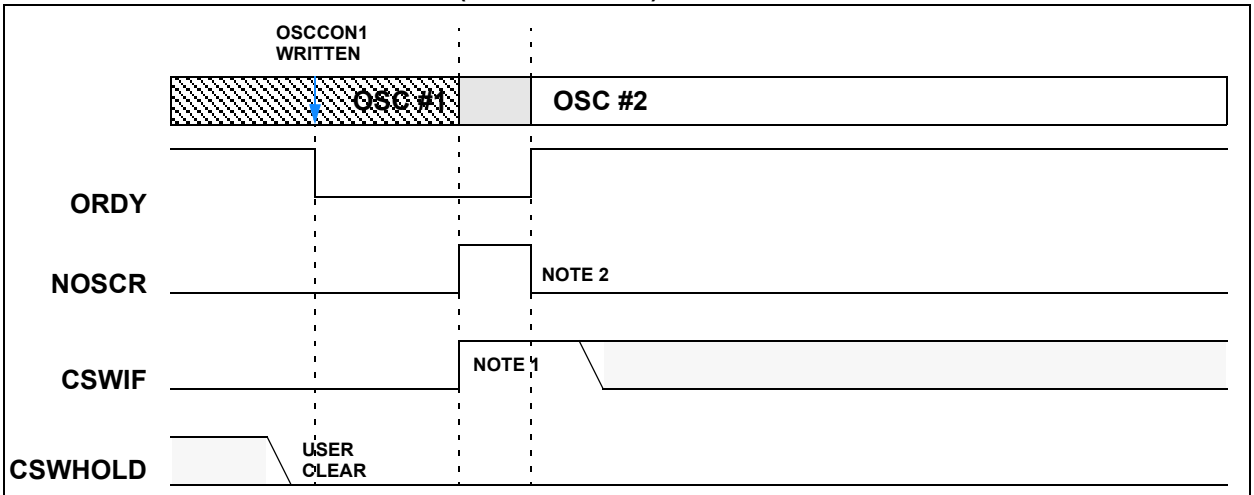

Note 1: CSWIF is asserted coincident with NOSCR; interrupt is serviced at OSC#2 speed.
2: The assertion of NOSCR is hidden from the user because it appears only for the duration of the switch.

FIGURE 9-5: CLOCK SWITCH (CSWHOLD = 1)

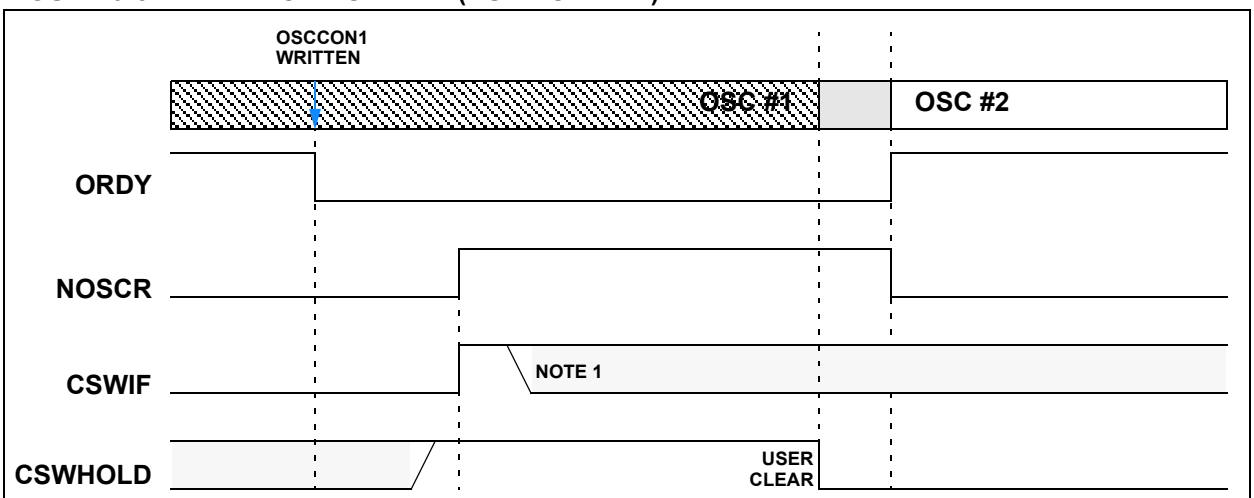

Note 1: CSWIF is asserted coincident with NOSCR, and may be cleared before or after clearing CSWHOLD = 0.

FIGURE 9-6: CLOCK SWITCH ABANDONED

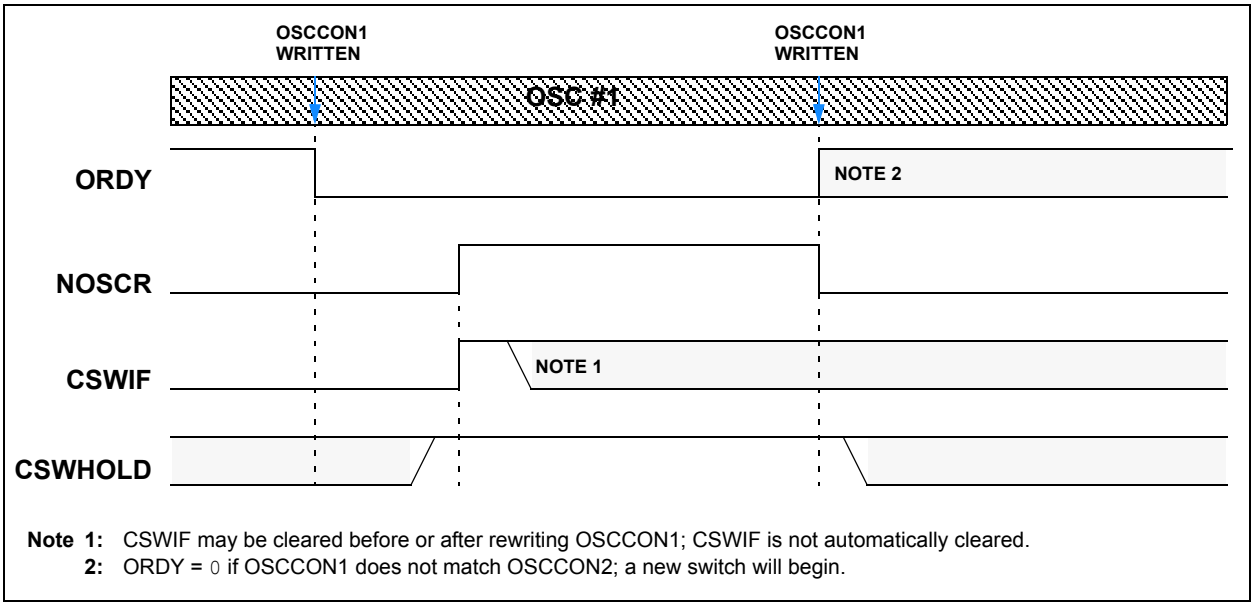

Note 1: CSWIF may be cleared before or after rewriting OSCCON1; CSWIF is not automatically cleared.
2: ORDY = 0 if OSCCON1 does not match OSCCON2; a new switch will begin.

9.4 Fail-Safe Clock Monitor

The Fail-Safe Clock Monitor (FSCM) allows the device to continue operating should the external oscillator fail. The FSCM is enabled by setting the FCMEN bit in the Configuration Words. The FSCM is applicable to all external Oscillator modes (ECL, ECM, ECH and Secondary Oscillator).

FIGURE 9-7: FSCM BLOCK DIAGRAM

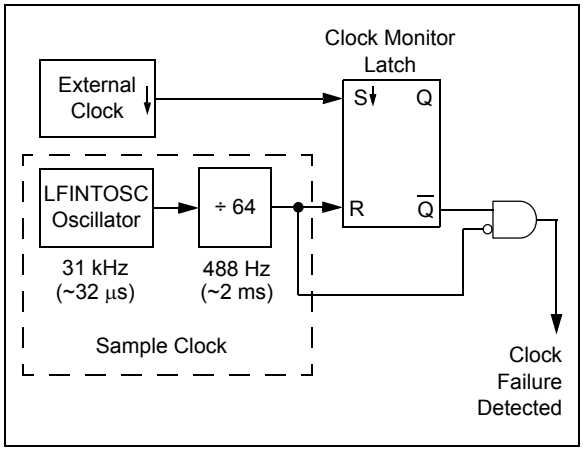

9.4.1 FAIL-SAFE DETECTION

The FSCM module detects a failed oscillator by comparing the external oscillator to the FSCM sample clock. The sample clock is generated by dividing the LFINTOSC by 64 (see Figure 9-7). Inside the fail detector block is a latch. The external clock sets the latch on each falling edge of the external clock. The sample clock clears the latch on each rising edge of the sample clock. A failure is detected when an entire half-cycle of the sample clock elapses before the external clock goes low.

9.4.2 FAIL-SAFE OPERATION

When the external clock fails, the FSCM switches the device clock to the HFINTOSC at 1 MHz clock frequency and sets the bit flag OSFIF of the PIR1 register. Setting this flag will generate an interrupt if the OSFIE bit of the PIE1 register is also set. The device firmware can then take steps to mitigate the problems that may arise from a failed clock. The system clock will continue to be sourced from the internal clock source until the device firmware successfully restarts the external oscillator and switches back to external operation, by writing to the NOSC and NDIV bits of the OSCCON1 register.

9.4.3 FAIL-SAFE CONDITION CLEARING

The Fail-Safe condition is cleared after a Reset, executing a `SLEEP` instruction or changing the NOSC and NDIV bits of the OSCCON1 register. When switching to the external oscillator, or external oscillator and PLL, the OST is restarted. While the OST is running, the device continues to operate from the INTOSC selected in OSCCON1. When the OST times out, the Fail-Safe condition is cleared after successfully switching to the external clock source. The OSFIF bit should be cleared prior to switching to the external clock source. If the Fail-Safe condition still exists, the OSFIF flag will again become set by hardware.

9.4.4 RESET OR WAKE-UP FROM SLEEP

The FSCM is designed to detect an oscillator failure after the Oscillator Start-up Timer (OST) has expired. The OST is used after waking up from Sleep and after any type of Reset. The OST is not used with the EC Clock modes so that the FSCM will be active as soon as the Reset or wake-up has completed. Therefore, the device will always be executing code while the OST is operating.

FIGURE 9-8: FSCM TIMING DIAGRAM

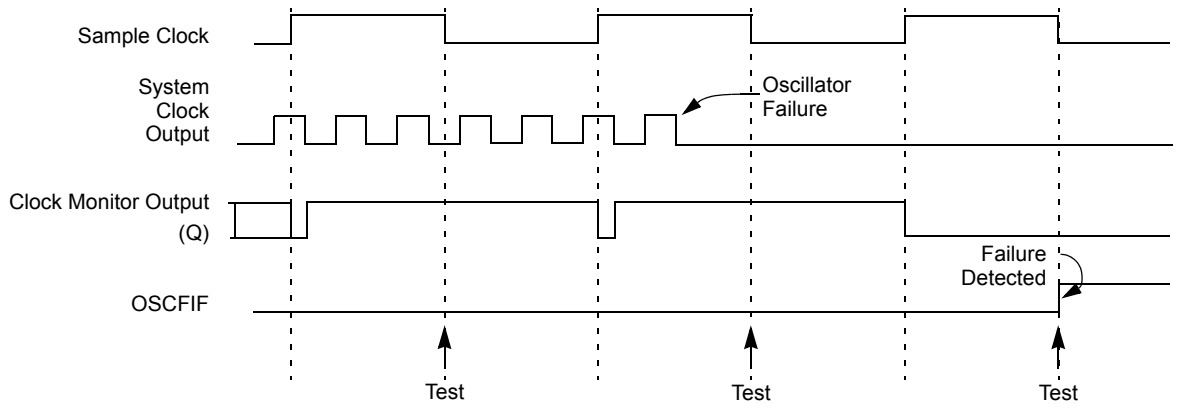

Note: The system clock is normally at a much higher frequency than the sample clock. The relative frequencies in this example have been chosen for clarity.

9.5 Active Clock Tuning

The Active Clock Tuning module (ACT) takes the SOSC frequency of 32.768 kHz and uses that time base to adjust the frequency of the HFINTOSC over voltage and temperature. The ACT module uses the same TUN<5:0> bits as supplied to the user. When clock recovery is enabled, the TUN bits are read-only to the user, and automatically updated.

9.6 Register Definitions: Oscillator Control

REGISTER 9-1: OSCCON1: OSCILLATOR CONTROL REGISTER1

U-0	R/W-f/f(1)	R/W-f/f(1)	R/W-f/f(1)	R/W-q/q	R/W-q/q	R/W-q/q	R/W-q/q
—	NOSC<2:0>(2,3)			NDIV<3:0>(2,3,4)			
bit 7							bit 0

Legend:		
R = Readable bit	W = Writable bit	U = Unimplemented bit, read as ‘0’
u = Bit is unchanged	x = Bit is unknown	-n/n = Value at POR and BOR/Value at all other Resets
‘1’ = Bit is set	‘0’ = Bit is cleared	f = determined by fuse setting

bit 7 **Unimplemented:** Read as ‘0’

bit 6-4 **NOSC<2:0>:** New Oscillator Source Request bits
The setting requests a source oscillator and PLL combination per Table 9-1.
POR value = RSTOSC (Register 5-1).

bit 3-0 **NDIV<3:0>:** New Divider Selection Request bits
The setting determines the new postscaler division ratio per Table 9-1.

Note 1: The default value (f/f) is set equal to the RSTOSC Configuration bits.
2: If NOSC is written with a reserved value (Table 9-1), the operation is ignored and neither NOSC nor NDIV is written.
3: When CSWEN = 0, this register is read-only and cannot be changed from the POR value.
4: When NOSC = 110 (HFINTOSC 4 MHz), the NDIV bits will default to ‘0010’ upon Reset; for all other NOSC settings the NDIV bits will default to ‘0000’ upon Reset.

REGISTER 9-2: OSCCON2: OSCILLATOR CONTROL REGISTER 2(1)

U-0	R-n/n(2)	R-n/n(2)	R-n/n(2)	R-n/n(2)	R-n/n(2)	R-n/n(2)	R-n/n(2)
—	COSC<2:0>			CDIV<3:0>			
bit 7							bit 0

Legend:		
R = Readable bit	W = Writable bit	U = Unimplemented bit, read as ‘0’
u = Bit is unchanged	x = Bit is unknown	-n/n = Value at POR and BOR/Value at all other Resets
‘1’ = Bit is set	‘0’ = Bit is cleared	

bit 7 **Unimplemented:** Read as ‘0’

bit 6-4 **COSC<2:0>:** Current Oscillator Source Select bits (read-only)
Indicates the current source oscillator and PLL combination per Table 9-1.

bit 3-0 **CDIV<3:0>:** Current Divider Select bits (read-only)
Indicates the current postscaler division ratio per Table 9-1.

Note 1: The POR value is the value present when user code execution begins.
2: The Reset value (n/n) is the same as the NOSC/NDIV bits.

TABLE 9-1: NOSC/COSC BIT SETTINGS

NOSC<2:0>/ COSC<2:0>	Clock Source
111	EXTOSC(1)
110	HFINTOSC(2)
101	LFINTOSC
100	SOSC
011	Reserved (operates like NOSC = 110)
010	EXTOSC with 4x PLL(1)
001	HFINTOSC with 2x PLL(1)
000	HFINTOSC with OSCFRQ = 32 MHz and CDIV = 1:1

Note 1: EXTOSC configured by the FEXTOSC bits of Configuration Word 1 (Register 5-1).

2: HFINTOSC settings are configured with the HFFRQ bits of the OSCFRQ register (Register 9-6).

TABLE 9-2: NDIV/CDIV BIT SETTINGS

NDIV<3:0>/ CDIV<3:0>	Clock divider
1111-1010	Reserved
1001	512
1000	256
0111	128
0110	64
0101	32
0100	16
0011	8
0010	4
0001	2
0000	1

REGISTER 9-3: OSCCON3: OSCILLATOR CONTROL REGISTER 3

R/W/HC-0/0	R/W-0/0	U-0	R-0/0	R-0/0	U-0	U-0	U-0
CSWHOLD	SOSCPWR	—	ORDY	NOSCR	—	—	—
bit 7							bit 0

Legend:		
R = Readable bit	W = Writable bit	U = Unimplemented bit, read as ‘0’
u = Bit is unchanged	x = Bit is unknown	-n/n = Value at POR and BOR/Value at all other Resets
‘1’ = Bit is set	‘0’ = Bit is cleared	

bit 7 **CSWHOLD:** Clock Switch Hold bit
- 1 = Clock switch will hold (with interrupt) when the oscillator selected by NOSC is ready
- 0 = Clock switch may proceed when the oscillator selected by NOSC is ready; if this bit is clear at the time that NOSCR becomes ‘1’, the switch will occur

bit 6 **SOSCPWR:** Secondary Oscillator Power Mode Select bit
- 1 = Secondary oscillator operating in High-power mode
- 0 = Secondary oscillator operating in Low-power mode

bit 5 **Unimplemented:** Read as ‘0’.

bit 4 **ORDY:** Oscillator Ready bit (read-only)
- 1 = OSCCON1 = OSCCON2; the current system clock is the clock specified by NOSC
- 0 = A clock switch is in progress

bit 3 **NOSCR:** New Oscillator is Ready bit (read-only)
- 1 = A clock switch is in progress and the oscillator selected by NOSC indicates a “ready” condition
- 0 = A clock switch is not in progress, or the NOSC-selected oscillator is not yet ready

bit 2-0 **Unimplemented:** Read as ‘0’

REGISTER 9-4: OSCSTAT: OSCILLATOR STATUS REGISTER 1

R-q/q	R-q/q	R-q/q	R-q/q	R-q/q	R-q/q	U-0	R-q/q
EXTOR	HFOR	MFOR	LFOR	SOR	ADOR	—	PLLR
bit 7							bit 0

Legend:		
R = Readable bit	W = Writable bit	U = Unimplemented bit, read as ‘0’
u = Bit is unchanged	x = Bit is unknown	-n/n = Value at POR and BOR/Value at all other Resets
‘1’ = Bit is set	‘0’ = Bit is cleared	

bit 7 **EXTOR:** EXTOSC (external) Oscillator Ready bit
1 = The oscillator is ready to be used
0 = The oscillator is not enabled, or is not yet ready to be used.

bit 6 **HFOR:** HFINTOSC Oscillator Ready bit
1 = The oscillator is ready to be used
0 = The oscillator is not enabled, or is not yet ready to be used.

bit 5 **MFOR:** MFINTOSC Oscillator Ready bit
1 = The oscillator is ready to be used
0 = The oscillator is not enabled, or is not yet ready to be used

bit 4 **LFOR:** LFINTOSC Oscillator Ready bit
1 = The oscillator is ready to be used
0 = The oscillator is not enabled, or is not yet ready to be used.

bit 3 **SOR:** Secondary (Timer1) Oscillator Ready bit
1 = The oscillator is ready to be used
0 = The oscillator is not enabled, or is not yet ready to be used.

bit 2 **ADOR:** ADOSC Oscillator Ready bit
1 = The oscillator is ready to be used
0 = The oscillator is not enabled, or is not yet ready to be used

bit 1 **Unimplemented:** Read as ‘0’

bit 0 **PLLR:** PLL is Ready bit
1 = The PLL is ready to be used
0 = The PLL is not enabled, the required input source is not ready, or the PLL is not locked.

REGISTER 9-5: OSCEN: OSCILLATOR MANUAL ENABLE REGISTER

R/W-0/0	R/W-0/0	R/W-0/0	R/W-0/0	R/W-0/0	R/W-0/0	U-0	U-0
EXTOEN	HFOEN	MFOEN	LFOEN	SOSCEN	ADOEN	—	—
bit 7							bit 0

Legend:		
R = Readable bit	W = Writable bit	U = Unimplemented bit, read as ‘0’
u = Bit is unchanged	x = Bit is unknown	-n/n = Value at POR and BOR/Value at all other Resets
‘1’ = Bit is set	‘0’ = Bit is cleared	

bit 7 **EXTOEN:** External Oscillator Manual Request Enable bit
1 = EXTOSC is explicitly enabled, operating as specified by FEXTOSC
0 = EXTOSC could be enabled by another module

bit 6 **HFOEN:** HFINTOSC Oscillator Manual Request Enable bit
1 = HFINTOSC is explicitly enabled, operating as specified by OSCFRQ
0 = HFINTOSC could be enabled by another module

bit 5 **MFOEN:** MFINTOSC Oscillator Manual Request Enable bit
1 = MFINTOSC is explicitly enabled
0 = MFINTOSC could be enabled by another module

bit 4 **LFOEN:** LFINTOSC (31 kHz) Oscillator Manual Request Enable bit
1 = LFINTOSC is explicitly enabled
0 = LFINTOSC could be enabled by another module

bit 3 **SOSCEN:** Secondary (Timer1) Oscillator Manual Request bit
1 = Secondary oscillator is explicitly enabled, operating as specified by SOSCPWR
0 = Secondary oscillator could be enabled by another module

bit 2 **ADOEN:** FRC Oscillator Manual Request Enable bit
1 = FRC is explicitly enabled
0 = FRC could be enabled by another module

bit 1-0 **Unimplemented:** Read as ‘0’

REGISTER 9-6: OSCFRQ: HFINTOSC FREQUENCY SELECTION REGISTER

U-0	U-0	U-0	U-0	U-0	R/W-q/q	R/W-q/q	R/W-q/q
—	—	—	—	—	HFFRQ<2:0>(1)		
bit 7							bit 0

Legend:		
R = Readable bit	W = Writable bit	U = Unimplemented bit, read as ‘0’
u = Bit is unchanged	x = Bit is unknown	-n/n = Value at POR and BOR/Value at all other Resets
‘1’ = Bit is set	‘0’ = Bit is cleared	

bit 7-3 **Unimplemented:** Read as ‘0’

bit 2-0 **HFFRQ<2:0>:** HFINTOSC Frequency Selection bits
Nominal Freq (MHz):
111 = Reserved
110 = 32
101 = 16
100 = 12
011 = 8
010 = 4
001 = 2
000 = 1

Note 1: When RSTOSC=110 (HFINTOSC 1 MHz), the HFFRQ bits will default to ‘010’ upon Reset; when RSTOSC = 000 (HFINTOSC 32 MHz), the HFFRQ bits will default to ‘110’ upon Reset.

REGISTER 9-7: OSCTUNE: HFINTOSC TUNING REGISTER

U-0	U-0	R/W-1/1	R/W-0/0	R/W-0/0	R/W-0/0	R/W-0/0	R/W-0/0
—	—	HFTUN<5:0>					
bit 7							bit 0

Legend:		
R = Readable bit	W = Writable bit	U = Unimplemented bit, read as ‘0’
u = Bit is unchanged	x = Bit is unknown	-n/n = Value at POR and BOR/Value at all other Resets
‘1’ = Bit is set	‘0’ = Bit is cleared	

bit 7-6 **Unimplemented:** Read as ‘0’

bit 5-0 **HFTUN<5:0>:** HFINTOSC Frequency Tuning bits(1)
01 1111 = Maximum frequency
01 1110 =
•
•
•
00 0001 =
00 0000 = Center frequency. Oscillator module is running at the calibrated frequency (default value).
11 1111 =
•
•
•
10 0001 =
10 0000 = Minimum frequency.

Note 1: Read-only when ACTEN = 1.

REGISTER 9-8: ACTCON: ACTIVE CLOCK TUNING (ACT) CONTROL REGISTER

R/W-0/0	R/W-0/0	U-0	U-0	R-0/0	R/W-0/0	R-0/0	U-0
ACTEN	ACTUD	—	—	ACTLOCK	—	ACTORS	—
bit 7							bit 0

Legend:		
R = Readable bit	W = Writable bit	U = Unimplemented bit, read as ‘0’
u = Bit is unchanged	x = Bit is unknown	-n/n = Value at POR and BOR/Value at all other Resets
‘1’ = Bit is set	‘0’ = Bit is cleared	

bit 7 **ACTEN:** Enable bit
1 = ACT Enabled – HFINTOSC oscillator tuning is controlled by the ACT
0 = ACT Disabled – HFINTOSC oscillator tuning is controlled by the OSCTUNE<5:0> register

bit 6 **ACTUD:** Active Clock Tuning Update Paused bit
1 = Changes to OSCTUNE register from ACT module are disabled. User cannot write to OSCTUNE register
0 = OSCTUNE register updates on each act event from the selected source

bit 5-4 **Unimplemented:** Read as ‘0’

bit 3 **ACTLOCK:** Active Clock Tuning Lock Status bit
1 = Locked – ACT is within ±1% of its nominal value
0 = Not locked – ACT may or may not be within ±1% of its nominal value

bit 2 **Unimplemented:** Read as ‘0’

bit 1 **ACTORS:** Active Clock Tuning Out-of-Range Status bit
1 = The tuning value required for the nominal oscillator frequency is outside of the range that the oscillator may be tuned
0 = The automatic tuning value from the ACT hardware is within the range that the oscillator may be tuned

bit 0 **Unimplemented:** Read as ‘0’

TABLE 9-3: SUMMARY OF REGISTERS ASSOCIATED WITH CLOCK SOURCES

Name	Bit 7	Bit 6	Bit 5	Bit 4	Bit 3	Bit 2	Bit 1	Bit 0	Register on Page
OSCCON1	—	NOSC<2:0>			NDIV<3:0>				152
OSCCON2	—	COSC<2:0>			CDIV<3:0>				152
OSCCON3	CWSHOLD	SOSCPWR	—	ORDY	NOSCR	—	—	—	154
OSCFRQ	—	—	—	—	—	HFFRQ<2:0>			157
OSCSTAT	EXTOR	HFOR	MFOR	LFOR	SOR	ADOR	—	PLLR	155
OSCTUNE	—	—	HFTUN<5:0>						157
OSCEN	EXTOEN	HFOEN	MFOEN	LFOEN	SOSCEN	ADOEN	—	—	156
ACTCON	ACTEN	ACTUD	—	—	ACTLOCK	—	ACTORS		158

Legend: — = unimplemented location, read as '0'. Shaded cells are not used by clock sources.

TABLE 9-4: SUMMARY OF CONFIGURATION WORD WITH CLOCK SOURCES

Name	Bits	Bit -/7	Bit -/6	Bit 13/5	Bit 12/4	Bit 11/3	Bit 10/2	Bit 9/1	Bit 8/0	Register on Page
CONFIG1	13:8	—	—	FCMEN	—	CSWEN	LCDPEN	$\overline{\text{VBATEN}}$	$\overline{\text{CLKOUTEN}}$	120
	7:0	—	RSTOSC<2:0>			—	FEXTOSC<2:0>			

Legend: — = unimplemented location, read as '0'. Shaded cells are not used by clock sources.

10.0 INTERRUPTS

The interrupt feature allows certain events to preempt normal program flow. Firmware is used to determine the source of the interrupt and act accordingly. Some interrupts can be configured to wake the MCU from Sleep mode.

This chapter contains the following information for Interrupts:

- Operation
- Interrupt Latency
- Interrupts During Sleep
- INT Pin
- Automatic Context Saving

Many peripherals produce interrupts. Refer to the corresponding chapters for details.

A block diagram of the interrupt logic is shown in Figure 10-1.

FIGURE 10-1: INTERRUPT LOGIC

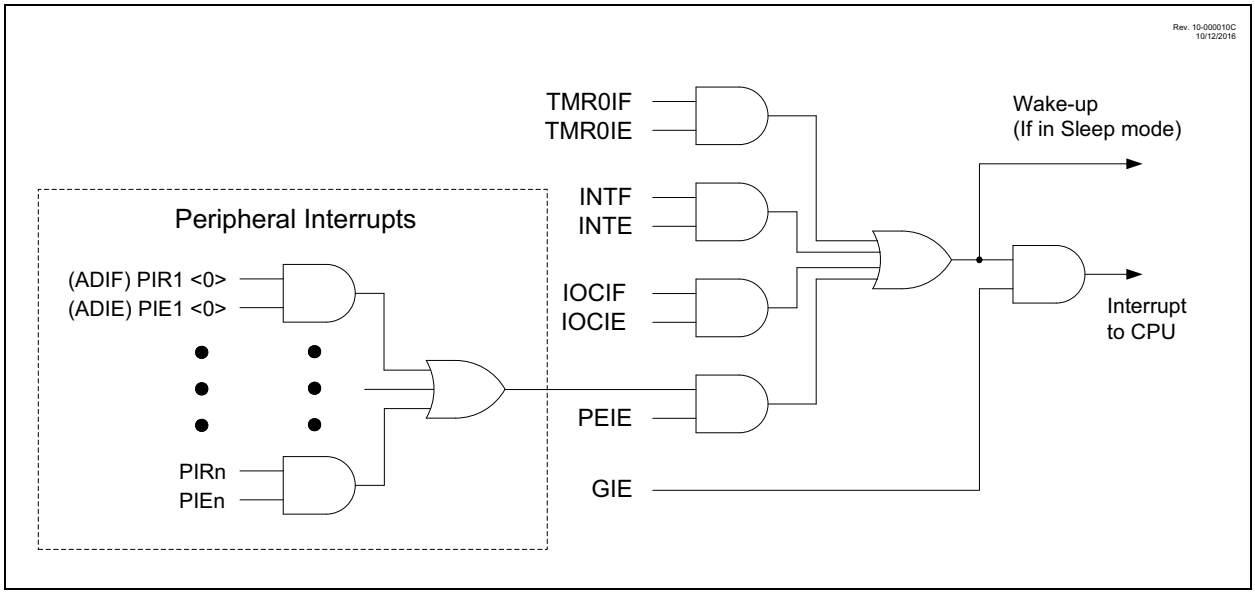

10.1 Operation

Interrupts are disabled upon any device Reset. They are enabled by setting the following bits:

- GIE bit of the INTCON register
- Interrupt Enable bit(s) of the PIEx[y] registers for the specific interrupt event(s)
- PEIE bit of the INTCON register (if the Interrupt Enable bit of the interrupt event is contained in the PIEx registers)

The PIR1, PIR2, PIR3, PIR4, PIR5, PIR6, PIR7 and PIR8 registers record individual interrupts via interrupt flag bits. Interrupt flag bits will be set, regardless of the status of the GIE, PEIE and individual interrupt enable bits.

The following events happen when an interrupt event occurs while interrupts are enabled:

- Current prefetched instruction is flushed
- GIE bit is cleared
- Current Program Counter (PC) is pushed onto the stack
- Critical registers are automatically saved to the shadow registers (See **"Section 10.5 "Automatic Context Saving"**)
- PC is loaded with the interrupt vector 0004h

The firmware within the Interrupt Service Routine (ISR) should determine the source of the interrupt by polling the interrupt flag bits. The interrupt flag bits must be cleared before exiting the ISR to avoid repeated interrupts. Because the GIE bit is cleared, any interrupt that occurs while executing the ISR will be recorded through its interrupt flag, but will not cause the processor to redirect to the interrupt vector.

The `RETFIE` instruction exits the ISR by popping the previous address from the stack, restoring the saved context from the shadow registers and setting the GIE bit.

For additional information on a specific interrupts operation, refer to its peripheral chapter.

Note 1:	Individual interrupt flag bits are set, regardless of the state of any other enable bits.
2:	All interrupts will be ignored while the GIE bit is cleared. Any interrupt occurring while the GIE bit is clear will be serviced when the GIE bit is set again.

10.2 Interrupt Latency

Interrupt latency is defined as the time from when the interrupt event occurs to the time code execution at the interrupt vector begins. The interrupt is sampled during Q1 of the instruction cycle. The actual interrupt latency then depends on the instruction that is executing at the time the interrupt is detected. See Figure 10-2 and Figure 10-3 for more details.

FIGURE 10-2: INTERRUPT LATENCY

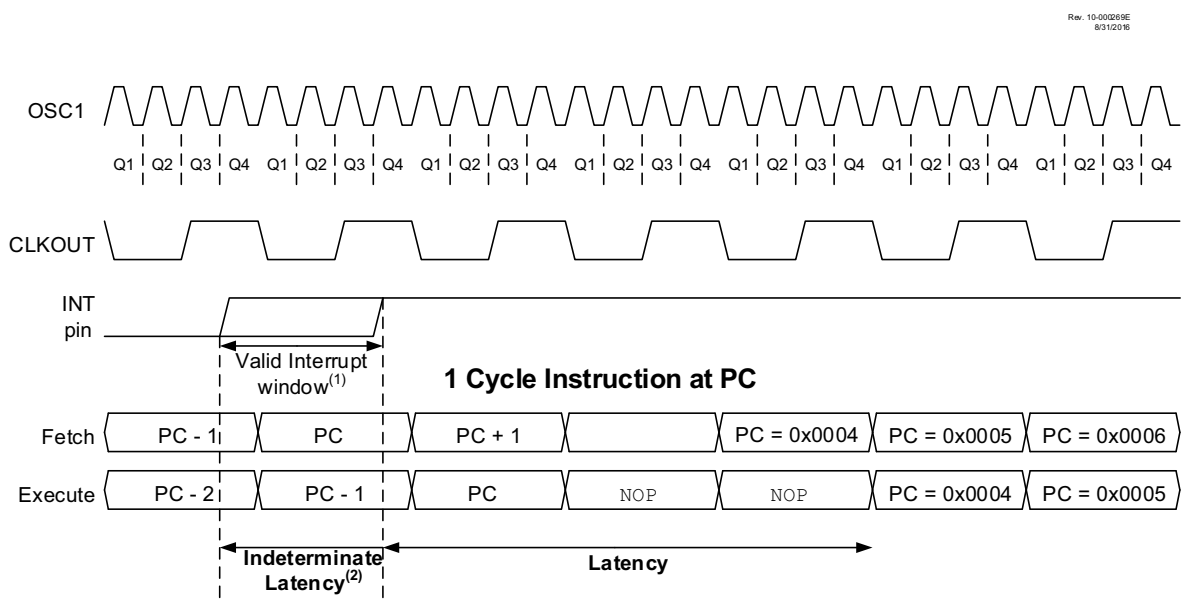

Note 1: An interrupt may occur at any time during the interrupt window.
2: Since an interrupt may occur any time during the interrupt window, the actual latency can vary.

FIGURE 10-3: INT PIN INTERRUPT TIMING

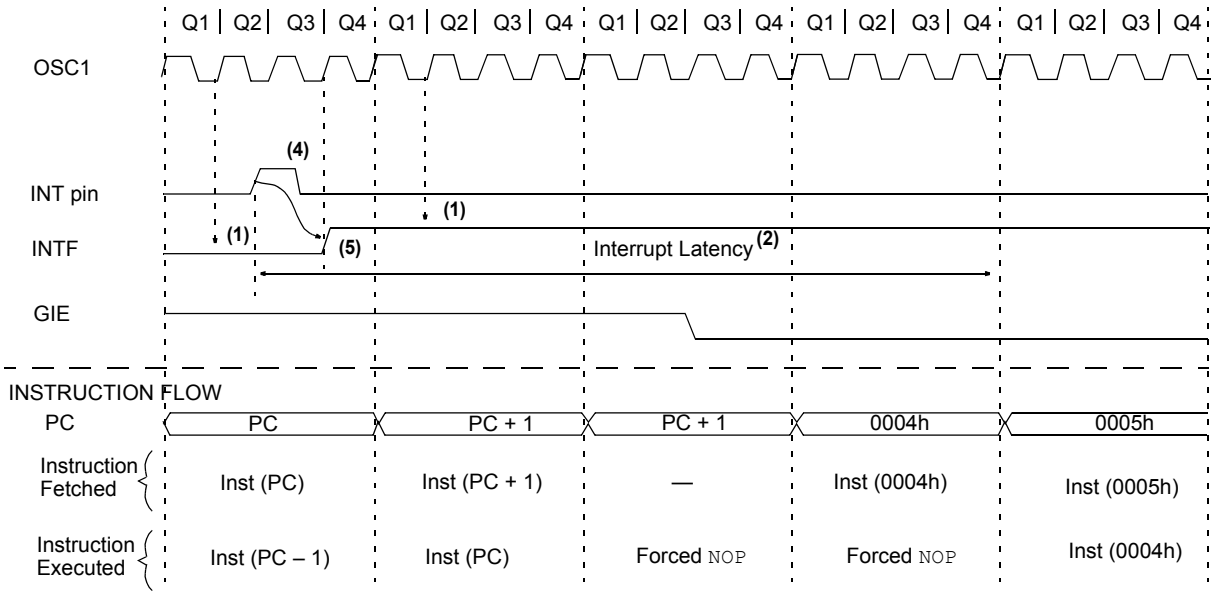

Note 1: INTF flag is sampled here (every Q1).

2: Asynchronous interrupt latency = 3-5 TCY. Synchronous latency = 3-4 TCY, where TCY = instruction cycle time. Latency is the same whether Inst (PC) is a single cycle or a 2-cycle instruction.

3: For minimum width of INT pulse, refer to AC specifications in **Section 39.0 "Electrical Specifications"**.

4: INTF is enabled to be set any time during the Q4-Q1 cycles.

10.3 Interrupts During Sleep

Interrupts can be used to wake from Sleep. To wake from Sleep, the peripheral must be able to operate without the system clock. The interrupt source must have the appropriate Interrupt Enable bit(s) set prior to entering Sleep.

On waking from Sleep, if the GIE bit is also set, the processor will branch to the interrupt vector. Otherwise, the processor will continue executing instructions after the `SLEEP` instruction. The instruction directly after the `SLEEP` instruction will always be executed before branching to the ISR. Refer to **Section 11.0 "Power-Saving Operation Modes"** for more details.

10.4 INT Pin

The INT pin can be used to generate an asynchronous edge-triggered interrupt. Refer to Figure 10-3. This interrupt is enabled by setting the INTE bit of the PIE0 register. The INTEDG bit of the INTCON register determines on which edge the interrupt will occur. When the INTEDG bit is set, the rising edge will cause the interrupt. When the INTEDG bit is clear, the falling edge will cause the interrupt. The INTF bit of the PIR0 register will be set when a valid edge appears on the INT pin. If the GIE and INTE bits are also set, the processor will redirect program execution to the interrupt vector.

10.5 Automatic Context Saving

Upon entering an interrupt, the return PC address is saved on the stack. Additionally, the following registers are automatically saved in the shadow registers:

- W register
- STATUS register (except for $\overline{TO}$ and $\overline{PD}$)
- BSR register
- FSR registers
- PCLATH register

Upon exiting the Interrupt Service Routine, these registers are automatically restored. Any modifications to these registers during the ISR will be lost. If modifications to any of these registers are desired, the corresponding shadow register should be modified and the value will be restored when exiting the ISR. The shadow registers are available in Bank 31 and are readable and writable. Depending on the user's application, other registers may also need to be saved.

10.6 Register Definitions: Interrupt Control

REGISTER 10-1: INTCON: INTERRUPT CONTROL REGISTER

R/W-0/0	R/W-0/0	U-0	U-0	U-0	U-0	U-0	R/W-1/1
GIE	PEIE	—	—	—	—	—	INTEDG
bit 7							bit 0

Legend:		
R = Readable bit	W = Writable bit	U = Unimplemented bit, read as ‘0’
u = Bit is unchanged	x = Bit is unknown	-n/n = Value at POR and BOR/Value at all other Resets
‘1’ = Bit is set	‘0’ = Bit is cleared	

bit 7 **GIE:** Global Interrupt Enable bit
1 = Enables all active interrupts
0 = Disables all interrupts

bit 6 **PEIE:** Peripheral Interrupt Enable bit
1 = Enables all active peripheral interrupts
0 = Disables all peripheral interrupts

bit 5-1 **Unimplemented:** Read as ‘0’

bit 0 **INTEDG:** Interrupt Edge Select bit
1 = Interrupt on rising edge of INT pin
0 = Interrupt on falling edge of INT pin

Note: Interrupt flag bits are set when an interrupt condition occurs, regardless of the state of its corresponding enable bit or the Global Enable bit, GIE, of the INTCON register. User software should ensure the appropriate interrupt flag bits are clear prior to enabling an interrupt.

REGISTER 10-2: PIE0: PERIPHERAL INTERRUPT ENABLE REGISTER 0

U-0	U-0	R/W-0/0	R/W-0/0	U-0	U-0	U-0	R/W-0/0
—	—	TMR0IE	IOCIE	—	—	—	INTE
bit 7							bit 0

Legend:		
R = Readable bit	W = Writable bit	U = Unimplemented bit, read as ‘0’
u = Bit is unchanged	x = Bit is unknown	-n/n = Value at POR and BOR/Value at all other Resets
‘1’ = Bit is set	‘0’ = Bit is cleared	HS = Hardware set

bit 7-6 **Unimplemented**: Read as ‘0’

bit 5 **TMR0IE:** Timer0 Overflow Interrupt Enable bit
- 1 = Enables the Timer0 interrupt
- 0 = Disables the Timer0 interrupt

bit 4 **IOCIE:** Interrupt-on-Change Interrupt Enable bit
- 1 = Enables the IOC change interrupt
- 0 = Disables the IOC change interrupt

bit 3-1 **Unimplemented**: Read as ‘0’

bit 0 **INTE:** INT External Interrupt Flag bit(1)
- 1 = Enables the INT external interrupt
- 0 = Disables the INT external interrupt

Note 1: The External Interrupt GPIO pin is selected by INTPPS (Register 15-1).

Note: Bit PEIE of the INTCON register must be set to enable any peripheral interrupt controlled by PIE1-PIE8. Interrupt sources controlled by the PIE0 register do not require PEIE to be set in order to allow interrupt vectoring (when GIE is set).

REGISTER 10-3: PIE1: PERIPHERAL INTERRUPT ENABLE REGISTER 1

R/W-0/0	R/W-0/0	U-0	U-0	U-0	U-0	R/W-0/0	R/W-0/0
OSFIE	CSWIE	—	—	—	—	ADTIE	ADIE
bit 7							bit 0

Legend:		
R = Readable bit	W = Writable bit	U = Unimplemented bit, read as ‘0’
u = Bit is unchanged	x = Bit is unknown	-n/n = Value at POR and BOR/Value at all other Resets
‘1’ = Bit is set	‘0’ = Bit is cleared	

bit 7 **OSFIE:** Oscillator Fail Interrupt Enable bit
1 = Enables the Oscillator Fail Interrupt
0 = Disables the Oscillator Fail Interrupt

bit 6 **CSWIE:** Clock Switch Complete Interrupt Enable bit
1 = The clock switch module interrupt is enabled
0 = The clock switch module interrupt is disabled

bit 5-2 **Unimplemented:** Read as ‘0’

bit 1 **ADTIE:** Analog-to-Digital Converter (ADC) Threshold Compare Interrupt Enable bit
1 = Enables the ADC threshold compare interrupt
0 = Disables the ADC threshold compare interrupt

bit 0 **ADIE:** Analog-to-Digital Converter (ADC) Interrupt Enable bit
1 = Enables the ADC interrupt
0 = Disables the ADC interrupt

Note: Bit PEIE of the INTCON register must be set to enable any peripheral interrupt controlled by registers PIE1-PIE8.

REGISTER 10-4: PIE2: PERIPHERAL INTERRUPT ENABLE REGISTER 2

U-0	R/W-0/0	U-0	U-0	U-0	U-0	R/W-0/0	R/W-0/0
—	ZCDIE	—	—	—	—	C2IE	C1IE
bit 7							bit 0

Legend:		
R = Readable bit	W = Writable bit	U = Unimplemented bit, read as ‘0’
u = Bit is unchanged	x = Bit is unknown	-n/n = Value at POR and BOR/Value at all other Resets
‘1’ = Bit is set	‘0’ = Bit is cleared	

bit 7 **Unimplemented:** Read as ‘0’

bit 6 **ZCDIE:** Zero-Cross Detection (ZCD) Interrupt Enable bit
1 = Enables the ZCD interrupt
0 = Disables the ZCD interrupt

bit 5-2 **Unimplemented:** Read as ‘0’

bit 1 **C2IE:** Comparator C2 Interrupt Enable bit
1 = Enables the Comparator C2 interrupt
0 = Disables the Comparator C2 interrupt

bit 0 **C1IE:** Comparator C1 Interrupt Enable bit
1 = Enables the Comparator C1 interrupt
0 = Disables the Comparator C1 interrupt

Note: Bit PEIE of the INTCON register must be set to enable any peripheral interrupt controlled by registers PIE1-PIE8.

REGISTER 10-5: PIE3: PERIPHERAL INTERRUPT ENABLE REGISTER 3

R/W-0/0	R/W-0/0	R/W-0/0	R/W-0/0	U-0	U-0	R/W-0/0	R/W-0/0
RC2IE	TX2IE	RC1IE	TX1IE	—	—	BCL1IE	SSP1IE
bit 7							bit 0

Legend:		
R = Readable bit	W = Writable bit	U = Unimplemented bit, read as ‘0’
u = Bit is unchanged	x = Bit is unknown	-n/n = Value at POR and BOR/Value at all other Resets
‘1’ = Bit is set	‘0’ = Bit is cleared	

bit 7 **RC2IE:** USART Receive Interrupt Enable bit
1 = Enables the USART receive interrupt
0 = Enables the USART receive interrupt

bit 6 **TX2IE:** USART Transmit Interrupt Enable bit
1 = Enables the USART transmit interrupt
0 = Disables the USART transmit interrupt

bit 5 **RC1IE:** USART Receive Interrupt Enable bit
1 = Enables the USART receive interrupt
0 = Enables the USART receive interrupt

bit 4 **TX1IE:** USART Transmit Interrupt Enable bit
1 = Enables the USART transmit interrupt
0 = Disables the USART transmit interrupt

bit 3-2 **Unimplemented:** Read as ‘0’

bit 1 **BCL1IE:** MSSP1 Bus Collision Interrupt Enable bit
1 = MSSP bus collision interrupt enabled
0 = MSSP bus collision interrupt disabled

bit 0 **SSP1IE:** Synchronous Serial Port (MSSP1) Interrupt Enable bit
1 = Enables the MSSP interrupt
0 = Disables the MSSP interrupt

Note: Bit PEIE of the INTCON register must be set to enable any peripheral interrupt controlled by PIE1-PIE8.

REGISTER 10-6: PIE4: PERIPHERAL INTERRUPT ENABLE REGISTER 4

U-0	U-0	U-0	U-0	R/W-0/0	U-0	R/W-0/0	R/W-0/0
—	—	—	—	TMR4IE	—	TMR2IE	TMR1IE
bit 7							bit 0

Legend:		
R = Readable bit	W = Writable bit	U = Unimplemented bit, read as ‘0’
u = Bit is unchanged	x = Bit is unknown	-n/n = Value at POR and BOR/Value at all other Resets
‘1’ = Bit is set	‘0’ = Bit is cleared	HS = Hardware set

bit 7-4 **Unimplemented:** Read as ‘0’

bit 3 **TMR4IE:** TMR4 to PR4 Match Interrupt Enable bit
1 = Enables the Timer4 to PR4 match interrupt
0 = Disables the Timer4 to PR4 match interrupt

bit 2 **Unimplemented:** Read as ‘0’

bit 1 **TMR2IE:** TMR2 to PR2 Match Interrupt Enable bit
1 = Enables the Timer2 to PR2 match interrupt
0 = Disables the Timer2 to PR2 match interrupt

bit 0 **TMR1IE:** Timer1 Overflow Interrupt Enable bit
1 = Enables the Timer1 overflow interrupt
0 = Enables the Timer1 overflow interrupt

Note: Bit PEIE of the INTCON register must be set to enable any peripheral interrupt controlled by registers PIE1-PIE8.

REGISTER 10-7: PIE5: PERIPHERAL INTERRUPT ENABLE REGISTER 5

R/W-0/0	R/W-0/0	R/W-0/0	R/W-0/0	U-0	U-0	U-0	R/W-0/0
CLC4IE	CLC3IE	CLC2IE	CLC1IE	—	—	—	TMR1GIE
bit 7							bit 0

Legend:		
R = Readable bit	W = Writable bit	U = Unimplemented bit, read as ‘0’
u = Bit is unchanged	x = Bit is unknown	-n/n = Value at POR and BOR/Value at all other Resets
‘1’ = Bit is set	‘0’ = Bit is cleared	HS = Hardware set

bit 7 **CLC4IE:** CLC4 Interrupt Enable bit
1 = CLC4 interrupt enabled
0 = CLC4 interrupt disabled

bit 6 **CLC3IE:** CLC3 Interrupt Enable bit
1 = CLC3 interrupt enabled
0 = CLC3 interrupt disabled

bit 5 **CLC2IE:** CLC2 Interrupt Enable bit
1 = CLC2 interrupt enabled
0 = CLC2 interrupt disabled

bit 4 **CLC1IE:** CLC1 Interrupt Enable bit
1 = CLC1 interrupt enabled
0 = CLC1 interrupt disabled

bit 3-1 **Unimplemented:** Read as ‘0’

bit 0 **TMR1GIE:** Timer1 Gate Interrupt Enable bit
1 = Enables the Timer1 gate acquisition interrupt
0 = Disables the Timer1 gate acquisition interrupt

Note: Bit PEIE of the INTCON register must be set to enable any peripheral interrupt controlled by registers PIE1-PIE8.

REGISTER 10-8: PIE6: PERIPHERAL INTERRUPT ENABLE REGISTER 6

R/W-0/0	U-0	U-0	U-0	U-0	U-0	R/W-0/0	R/W-0/0
CRIE	—	—	—	—	—	CCP2IE	CCP1IE
bit 7							bit 0

Legend:		
R = Readable bit	W = Writable bit	U = Unimplemented bit, read as ‘0’
u = Bit is unchanged	x = Bit is unknown	-n/n = Value at POR and BOR/Value at all other Resets
‘1’ = Bit is set	‘0’ = Bit is cleared	HS = Hardware set

bit 7 **CRIE:** Clock Recovery Interrupt Enable bit
1 = Clock Recovery interrupt is enabled
0 = Clock Recovery interrupt is disabled

bit 6-2 **Unimplemented:** Read as ‘0’

bit 1 **CCP2IE:** CCP2 Interrupt Enable bit
1 = CCP2 interrupt is enabled
0 = CCP2 interrupt is disabled

bit 0 **CCP1IE:** CCP1 Interrupt Enable bit
1 = CCP1 interrupt is enabled
0 = CCP1 interrupt is disabled

Note: Bit PEIE of the INTCON register must be set to enable any peripheral interrupt controlled by registers PIE1-PIE8.

REGISTER 10-9: PIE7: PERIPHERAL INTERRUPT ENABLE REGISTER 7

U-0	U-0	R/W-0/0	U-0	U-0	U-0	U-0	R/W-0/0
—	—	NVMIE	—	—	—	—	CWG1IE
bit 7							bit 0

Legend:		
R = Readable bit	W = Writable bit	U = Unimplemented bit, read as ‘0’
u = Bit is unchanged	x = Bit is unknown	-n/n = Value at POR and BOR/Value at all other Resets
‘1’ = Bit is set	‘0’ = Bit is cleared	HS = Hardware set

bit 7-6 **Unimplemented:** Read as ‘0’.

bit 5 **NVMIE:** NVM Interrupt Enable bit
1 = NVM task complete interrupt enabled
0 = NVM interrupt not enabled

bit 4-1 **Unimplemented:** Read as ‘0’.

bit 0 **CWG1IE:** Complementary Waveform Generator (CWG) Interrupt Enable bit
1 = CWG1 interrupt is enabled
0 = CWG1 interrupt disabled

Note: Bit PEIE of the INTCON register must be set to enable any peripheral interrupt controlled by registers PIE1-PIE8.

REGISTER 10-10: PIE8: PERIPHERAL INTERRUPT ENABLE REGISTER 8

R/W-0/0	R/W-0/0	U-0	U-0	U-0	R/W-0/0	R/W-0/0	R/W-0/0
LCDIE	RTCCIE	—	—	—	SMT1PWAIE	SMT1PRAIE	SMT1IE
bit 7							bit 0

Legend:		
R = Readable bit	W = Writable bit	U = Unimplemented bit, read as ‘0’
u = Bit is unchanged	x = Bit is unknown	-n/n = Value at POR and BOR/Value at all other Resets
‘1’ = Bit is set	‘0’ = Bit is cleared	HS = Hardware set

bit 7 **LCDIE:** LCD Interrupt Enable bit
1 = Enables the LCD interrupt
0 = Disables the LCD interrupt

bit 6 **RTCCIE:** SMT1 Overflow Interrupt Enable bit
1 = Enables the RTCC interrupt
0 = Disables the RTCC interrupt

bit 5-3 **Unimplemented:** Read as ‘0’

bit 2 **SMT1PWAIE:** SMT1 Pulse-Width Acquisition Interrupt Enable bit
1 = Enables the SMT acquisition interrupt
0 = Disables the SMT acquisition interrupt

bit 1 **SMT1PRAIE:** SMT1 Period Acquisition Interrupt Enable bit
1 = Enables the SMT acquisition interrupt
0 = Disables the SMT acquisition interrupt

bit 0 **SMT1IE:** SMT1 Overflow Interrupt Enable bit
1 = Enables the SMT overflow interrupt
0 = Disables the SMT overflow interrupt

Note: Bit PEIE of the INTCON register must be set to enable any peripheral interrupt controlled by registers PIE1-PIE8.

REGISTER 10-11: PIR0: PERIPHERAL INTERRUPT STATUS REGISTER 0

U-0	U-0	R/W/HS-0/0	R-0	U-0	U-0	U-0	R/W/HS-0/0
—	—	TMR0IF	IOCIF	—	—	—	INTF(1)
bit 7							bit 0

Legend:		
R = Readable bit	W = Writable bit	U = Unimplemented bit, read as ‘0’
u = Bit is unchanged	x = Bit is unknown	-n/n = Value at POR and BOR/Value at all other Resets
‘1’ = Bit is set	‘0’ = Bit is cleared	HS= Hardware Set

bit 7-6 **Unimplemented:** Read as ‘0’

bit 5 **TMR0IF:** Timer0 Overflow Interrupt Flag bit
- 1 = Timer0 register has overflowed (must be cleared in software)
- 0 = Timer0 register did not overflow

bit 4 **IOCIF:** Interrupt-on-Change Interrupt Flag bit (read-only)(2)
- 1 = One or more of the IOCAF-IOCEF register bits are currently set, indicating an enabled edge was detected by the IOC module.
- 0 = None of the IOCAF-IOCEF register bits are currently set

bit 3-1 **Unimplemented:** Read as ‘0’

bit 0 **INTF:** INT External Interrupt Flag bit(1)
- 1 = The INT external interrupt occurred (must be cleared in software)
- 0 = The INT external interrupt did not occur

Note 1: The External Interrupt GPIO pin is selected by INTPPS (Register 15-1).

2: The IOCIF bit is the logical OR of all the IOCAF-IOCEF flags. Therefore, to clear the IOCIF flag, application firmware must clear all of the lower level IOCAF-IOCEF register bits.

Note: Interrupt flag bits are set when an interrupt condition occurs, regardless of the state of its corresponding enable bit or the Global Enable bit, GIE, of the INTCON register. User software should ensure the appropriate interrupt flag bits are clear prior to enabling an interrupt.

REGISTER 10-12: PIR1: PERIPHERAL INTERRUPT REQUEST REGISTER 1

R/W/HS-0/0	R/W/HS-0/0	U-0	U-0	U-0	U-0	R/W/HS-0/0	R/W/HS-0/0
OSFIF	CSWIF	—	—	—	—	ADTIF	ADIF
bit 7							bit 0

Legend:		
R = Readable bit	W = Writable bit	U = Unimplemented bit, read as ‘0’
u = Bit is unchanged	x = Bit is unknown	-n/n = Value at POR and BOR/Value at all other Resets
‘1’ = Bit is set	‘0’ = Bit is cleared	HS = Hardware set

bit 7 **OSFIF**: Oscillator Fail-Safe Interrupt Flag bit
1 = Oscillator fail-safe interrupt has occurred (must be cleared in software)
0 = No oscillator fail-safe interrupt

bit 6 **CSWIF:** Clock Switch Complete Interrupt Flag bit
1 = The clock switch module indicates an interrupt condition and is ready to complete the clock switch operation (must be cleared in software)
0 = The clock switch does not indicate an interrupt condition

bit 5-2 **Unimplemented:** Read as ‘0’

bit 1 **ADTIF:** Analog-to-Digital Converter (ADC) Threshold Compare Interrupt Flag bit
1 = An A/D measurement was beyond the configured threshold (must be cleared in software)
0 = A/D measurements have been within the configured threshold

bit 0 **ADIF**: Analog-to-Digital Converter (ADC) Interrupt Flag bit
1 = An A/D conversion or complex operation has completed (must be cleared in software)
0 = An A/D conversion or complex operation is not complete

Note: Interrupt flag bits are set when an interrupt condition occurs, regardless of the state of its corresponding enable bit or the Global Enable bit, GIE, of the INTCON register. User software should ensure the appropriate interrupt flag bits are clear prior to enabling an interrupt.

REGISTER 10-13: PIR2: PERIPHERAL INTERRUPT REQUEST REGISTER 2

U-0	R/W/HS-0/0	U-0	U-0	U-0	U-0	R/W/HS-0/0	R/W/HS-0/0
—	ZCDIF	—	—	—	—	C2IF	C1IF
bit 7							bit 0

Legend:		
R = Readable bit	W = Writable bit	U = Unimplemented bit, read as ‘0’
u = Bit is unchanged	x = Bit is unknown	-n/n = Value at POR and BOR/Value at all other Resets
‘1’ = Bit is set	‘0’ = Bit is cleared	HS = Hardware set

bit 7 **Unimplemented**: Read as ‘0’

bit 6 **ZCDIF:** Zero-Cross Detect (ZCD1) Interrupt Flag bit
1 = An enabled rising and/or falling ZCD1 event has been detected (must be cleared in software)
0 = No ZCD1 event has occurred

bit 5-2 **Unimplemented**: Read as ‘0’

bit 1 **C2IF**: Comparator C2 Interrupt Flag bit
1 = Comparator 2 interrupt asserted (must be cleared in software)
0 = Comparator 2 interrupt not asserted

bit 0 **C1IF:** Comparator C1 Interrupt Flag bit
1 = Comparator 1 interrupt asserted (must be cleared in software)
0 = Comparator 1 interrupt not asserted

Note: Interrupt flag bits are set when an interrupt condition occurs, regardless of the state of its corresponding enable bit or the Global Enable bit, GIE, of the INTCON register. User software should ensure the appropriate interrupt flag bits are clear prior to enabling an interrupt.

REGISTER 10-14: PIR3: PERIPHERAL INTERRUPT REQUEST REGISTER 3

R-0	R-0	R-0	R-0	U-0	U-0	R/W/HS-0/0	R/W/HS-0/0
RC2IF	TX2IF	RC1IF	TX1IF	—	—	BCL1IF	SSP1IF
bit 7							bit 0

Legend:		
R = Readable bit	W = Writable bit	U = Unimplemented bit, read as ‘0’
u = Bit is unchanged	x = Bit is unknown	-n/n = Value at POR and BOR/Value at all other Resets
‘1’ = Bit is set	‘0’ = Bit is cleared	HS = Hardware clearable

bit 7 **RC2IF:** EUSART2 Receive Interrupt Flag (read-only) bit(1)
- 1 = The EUSART2 receive buffer is not empty (contains at least one byte)
- 0 = The EUSART2 receive buffer is empty

bit 6 **TX2IF:** EUSART2 Transmit Interrupt Flag (read-only) bit(1)
- 1 = The EUSART2 transmit buffer contains at least one unoccupied space
- 0 = The EUSART2 transmit buffer is currently full. The application firmware should not write to TXxREG

bit 5 **RC1IF:** EUSART1 Receive Interrupt Flag (read-only) bit (1)
- 1 = The EUSART1 receive buffer is not empty (contains at least one byte)
- 0 = The EUSART1 receive buffer is empty

bit 4 **TX1IF:** EUSART1 Transmit Interrupt Flag (read-only) bit(2)
- 1 = The EUSART1 transmit buffer contains at least one unoccupied space
- 0 = The EUSART1 transmit buffer is currently full. The application firmware should not write to TXxREG again, until more room becomes available in the transmit buffer.

bit 3-2 **Unimplemented:** Read as ‘0’

bit 1 **BCL1IF:** MSSP1 Bus Collision Interrupt Flag bit
- 1 = A bus collision was detected (must be cleared in software)
- 0 = No bus collision was detected

bit 0 **SSP1IF:** Synchronous Serial Port (MSSP1) Interrupt Flag bit
- 1 = The Transmission/Reception/Bus Condition is complete (must be cleared in software)
- 0 = Waiting for the Transmission/Reception/Bus Condition in progress

Note 1: The RCxIF flag is a read-only bit. To clear the RCxIF flag, the firmware must read from RCxREG enough times to remove all bytes from the receive buffer.

2: The TXxIF flag is a read-only bit, indicating if there is room in the transmit buffer. To clear the TXxIF flag, the firmware must write enough data to TXxREG to completely fill all available bytes in the buffer. The TXxIF flag does not indicate transmit completion (use TRMT for this purpose instead).

Note: Interrupt flag bits are set when an interrupt condition occurs, regardless of the state of its corresponding enable bit or the Global Enable bit, GIE, of the INTCON register. User software should ensure the appropriate interrupt flag bits are clear prior to enabling an interrupt.

REGISTER 10-15: PIR4: PERIPHERAL INTERRUPT REQUEST REGISTER 4

U-0	U-0	U-0	U-0	R/W/HS-0/0	U-0	R/W/HS-0/0	R/W/HS-0/0
—	—	—	—	TMR4IF	—	TMR2IF	TMR1IF
bit 7							bit 0

Legend:		
R = Readable bit	W = Writable bit	U = Unimplemented bit, read as ‘0’
u = Bit is unchanged	x = Bit is unknown	-n/n = Value at POR and BOR/Value at all other Resets
‘1’ = Bit is set	‘0’ = Bit is cleared	HS = Hardware set

bit 7-4 **Unimplemented:** Read as ‘0’

bit 3 **TRM4IF:** Timer4 Interrupt Flag bit
1 = The TMR4 postscaler overflowed, or in 1:1 mode, a TMR4 to PR4 match occurred (must be cleared in software)
0 = No TMR4 event has occurred

bit 2 **Unimplemented:** Read as ‘0’

bit 1 **TRM2IF:** Timer2 Interrupt Flag bit
1 = The TMR2 postscaler overflowed, or in 1:1 mode, a TMR2 to PR2 match occurred (must be cleared in software)
0 = No TMR2 event has occurred

bit 0 **TRM1IF:** Timer1 Overflow Interrupt Flag bit
1 = Timer1 overflow occurred (must be cleared in software)
0 = No Timer1 overflow occurred

Note: Interrupt flag bits are set when an interrupt condition occurs, regardless of the state of its corresponding enable bit or the Global Enable bit, GIE, of the INTCON register. User software should ensure the appropriate interrupt flag bits are clear prior to enabling an interrupt.

REGISTER 10-16: PIR5: PERIPHERAL INTERRUPT REQUEST REGISTER 5

R/W/HS-0/0	R/W/HS-0/0	R/W/HS-0/0	R/W/HS-0/0	U-0	U-0	U-0	R/W/HS-0/0
CLC4IF	CLC3IF	CLC2IF	CLC1IF	—	—	—	TMR1GIF
bit 7							bit 0

Legend:		
R = Readable bit	W = Writable bit	U = Unimplemented bit, read as ‘0’
u = Bit is unchanged	x = Bit is unknown	-n/n = Value at POR and BOR/Value at all other Resets
‘1’ = Bit is set	‘0’ = Bit is cleared	HS = Hardware set

bit 7 **CLC4IF:** CLC4 Interrupt Flag bit
1 = A CLC4OUT interrupt condition has occurred (must be cleared in software)
0 = No CLC4 interrupt event has occurred

bit 6 **CLC3IF:** CLC3 Interrupt Flag bit
1 = A CLC3OUT interrupt condition has occurred (must be cleared in software)
0 = No CLC3 interrupt event has occurred

bit 5 **CLC2IF:** CLC2 Interrupt Flag bit
1 = A CLC2OUT interrupt condition has occurred (must be cleared in software)
0 = No CLC2 interrupt event has occurred

bit 4 **CLC1IF:** CLC1 Interrupt Flag bit
1 = A CLC1OUT interrupt condition has occurred (must be cleared in software)
0 = No CLC1 interrupt event has occurred

bit 3-1 **Unimplemented:** Read as ‘0’

bit 0 **TMR1GIF:** Timer1 Gate Interrupt Flag bit
1 = The Timer1 Gate has gone inactive (the acquisition is complete)
0 = The Timer1 Gate has not gone inactive

Note: Interrupt flag bits are set when an interrupt condition occurs, regardless of the state of its corresponding enable bit or the Global Enable bit, GIE, of the INTCON register. User software should ensure the appropriate interrupt flag bits are clear prior to enabling an interrupt.

REGISTER 10-17: PIR6: PERIPHERAL INTERRUPT REQUEST REGISTER 6

R/W/HS-0/0	U-0	U-0	U-0	U-0	U-0	R/W/HS-0/0	R/W/HS-0/0
CRIF	—	—	—	—	—	CCP2IF	CCP1IF
bit 7							bit 0

Legend:		
R = Readable bit	W = Writable bit	U = Unimplemented bit, read as ‘0’
u = Bit is unchanged	x = Bit is unknown	-n/n = Value at POR and BOR/Value at all other Resets
‘1’ = Bit is set	‘0’ = Bit is cleared	HS = Hardware set

bit 7 **CRIF:** Clock Recovery Interrupt Flag bit
1 = A CRIF interrupt condition has occurred (must be cleared in software)
0 = No CRIF interrupt event has occurred

bit 6-2 **Unimplemented:** Read as ‘0’

bit 1 **CCP2IF:** CCP2 Interrupt Flag bit

Value	CCPM Mode		
	Capture	**Compare**	**PWM**
1	Capture occurred (must be cleared in software)	Compare match occurred (must be cleared in software)	Output trailing edge occurred (must be cleared in software)
0	Capture did not occur	Compare match did not occur	Output trailing edge did not occur

bit 0 **CCP1IF:** CCP1 Interrupt Flag bit

Value	CCPM Mode		
	Capture	**Compare**	**PWM**
1	Capture occurred (must be cleared in software)	Compare match occurred (must be cleared in software)	Output trailing edge occurred (must be cleared in software)
0	Capture did not occur	Compare match did not occur	Output trailing edge did not occur

Note: Interrupt flag bits are set when an interrupt condition occurs, regardless of the state of its corresponding enable bit or the Global Enable bit, GIE, of the INTCON register. User software should ensure the appropriate interrupt flag bits are clear prior to enabling an interrupt.

REGISTER 10-18: PIR7: PERIPHERAL INTERRUPT REQUEST REGISTER 7

U-0	U-0	R/W/HS-0/0	U-0	U-0	U-0	U-0	R/W/HS-0/0
—	—	NVMIF	—	—	—	—	CWG1IF
bit 7							bit 0

Legend:		
R = Readable bit	W = Writable bit	U = Unimplemented bit, read as ‘0’
u = Bit is unchanged	x = Bit is unknown	-n/n = Value at POR and BOR/Value at all other Resets
‘1’ = Bit is set	‘0’ = Bit is cleared	HS = Hardware set

bit 7-6 **Unimplemented:** Read as ‘0’

bit 5 **NVMIF:** Nonvolatile Memory (NVM) Interrupt Flag bit
1 = The requested NVM operation has completed
0 = NVM interrupt not asserted

bit 4-1 **Unimplemented:** Read as ‘0’

bit 0 **CWG1IF:** CWG1 Interrupt Flag bit
1 = CWG1 has gone into shutdown
0 = CWG1 is operating normally, or interrupt cleared

Note: Interrupt flag bits are set when an interrupt condition occurs, regardless of the state of its corresponding enable bit or the Global Enable bit, GIE, of the INTCON register. User software should ensure the appropriate interrupt flag bits are clear prior to enabling an interrupt.

REGISTER 10-19: PIR8: PERIPHERAL INTERRUPT REQUEST REGISTER 8

R/W/HS-0/0	R/W/HS-0/0	U-0	U-0	U-0	R/W/HS-0/0	R/W/HS-0/0	R/W/HS-0/0
LCDIF	RTCCIF	—	—	—	SMT1PWAIF	SMT1PRAIF	SMT1IF
bit 7							bit 0

Legend:		
R = Readable bit	W = Writable bit	U = Unimplemented bit, read as ‘0’
u = Bit is unchanged	x = Bit is unknown	-n/n = Value at POR and BOR/Value at all other Resets
‘1’ = Bit is set	‘0’ = Bit is cleared	HS = Hardware set

bit 7 **LCDIF:** LCD Interrupt Flag bit
1 = A LCDIF interrupt condition has occurred (must be cleared in software)
0 = No LCDIF interrupt event has occurred

bit 6 **RTCCIF:** LCD Interrupt Flag bit
1 = A RTCCIF interrupt condition has occurred (must be cleared in software)
0 = No RTCCIF interrupt event has occurred

bit 5-3 **Unimplemented:** Read as ‘0’

bit 2 **SMT1PWAIF:** SMT1 Pulse-Width Acquisition Interrupt Flag bit
1 = Interrupt is pending
0 = Interrupt is not pending

bit 1 **SMT1PRAIF:** SMT1 Period Acquisition Interrupt Flag bit
1 = Interrupt is pending
0 = Interrupt is not pending

bit 0 **SMT1IF:** SMT1 Overflow Interrupt Flag bit
1 = An SMT overflow event has occurred (must be cleared in software)
0 = No overflow event detected

TABLE 10-1: SUMMARY OF REGISTERS ASSOCIATED WITH INTERRUPTS

Name	Bit 7	Bit 6	Bit 5	Bit 4	Bit 3	Bit 2	Bit 1	Bit 0	Register on Page
INTCON	GIE	PEIE	—	—	—	—	—	INTEDG	164
PIE0	—	—	TMR0IE	IOCIE	—	—	—	INTE	165
PIE1	OSFIE	CSWIE	—	—	—	—	ADTIE	ADIE	166
PIE2	—	ZCDIE	—	—	—	—	C2IE	C1IE	167
PIE3	RC2IE	TX2IE	RC1IE	TX1IE	—	—	BCL1IE	SSP1IE	168
PIE4	—	—	—	—	TMR4IE	—	TMR2IE	TMR1IE	169
PIE5	CLC4IE	CLC3IE	CLC2IE	CLC1IE	—	—	—	TMR1GIE	170
PIE6	CRIE	—	—	—	—	—	CCP2IE	CCP1IE	171
PIE7	—	—	NVMIE	—	—	—	—	CWG1IE	172
PIE8	LCDIE	RTCCIE	—	—	—	SMT1PWAIE	SMT1PRAIE	SMT1IE	173
PIR0	—	—	TMR0IF	IOCIF	—	—	—	INTF	174
PIR1	OSFIF	CSWIF	—	—	—	—	ADTIF	ADIF	175
PIR2	—	ZCDIF	—	—	—	—	C2IF	C1IF	176
PIR3	RC2IF	TX2IF	RC1IF	TX1IF	—	—	BCL1IF	SSP1IF	177
PIR4	—	—	—	—	TMR4IF	—	TMR2IF	TMR1IF	178
PIR5	CLC4IF	CLC3IF	CLC2IF	CLC1IF	—	—	—	TMR1GIF	179
PIR6	CRIF	—	—	—	—	—	CCP2IF	CCP1IF	180
PIR7	—	—	NVMIF	—	—	—	—	CWG1IF	181
PIR8	LCDIF	RTCCIF	—	—	—	SMT1PWAIF	SMT1PRAIF	SMT1IF	182

Legend: — = unimplemented location, read as '0'. Shaded cells are not used by interrupts.

11.0 POWER-SAVING OPERATION MODES

The purpose of the Power-Down modes is to reduce power consumption. There are three Power-Down modes: Doze mode, Idle mode and Sleep mode.

11.1 Doze Mode

Doze mode saves power by reducing CPU execution and program memory (PFM) access, without affecting peripheral operation.

11.1.1 DOZE OPERATION

When the Doze Enable bit is set (DOZEN = 1), the CPU executes one instruction cycle out of every N cycles as defined by the DOZE<2:0> bits of the CPUDOZE register. FOSC and FOSC/4 clock sources are unaffected in Doze mode and peripherals can continue using these sources.

11.1.2 SYSTEM BEHAVIOR FOR INTERRUPTS DURING DOZE

If an interrupt occurs during Doze, it can be configured using the Recover-On-Interrupt bit (ROI) and the Doze-On-Exit bit (DOE). Refer to Table 11-1 for details about system behavior in all cases for a transition from *Main → ISR → Main*.

TABLE 11-1: SYSTEM BEHAVIOR FOR INTERRUPT DURING DOZE

DOZEN	ROI	Code flow			
		Main	ISR (1)	Return to Main	
0	0	Normal operation	Normal operation and DOE = DOZEN (in hardware) DOZEN = 0 (unchanged)	If DOE = 1 when return from interrupt; Doze operation and DOZEN = 1 (in hardware)	If DOE = 0 when return from interrupt; Normal operation and DOZEN = 0 (in hardware)
0	1	Normal operation	Normal operation and DOE = DOZEN (in hardware) DOZEN = 0 (in hardware)		
1	0	Doze operation	Doze operation and DOE = DOZEN (in hardware) DOZEN = 1 (unchanged)		
1	1	Doze operation	Normal operation and DOE = DOZEN (in hardware) DOZEN = 0 (in hardware)		

Note 1: User software can change the DOE bit in ISR.

For example, if ROI = 1 and DOZE<2:0> = 001, the instruction cycle ratio is 1:4. The CPU and memory operate for one instruction cycle and stay idle for the next three instruction cycles. The Doze operation is illustrated in Figure 11-1.

FIGURE 11-1: DOZE MODE OPERATION EXAMPLE

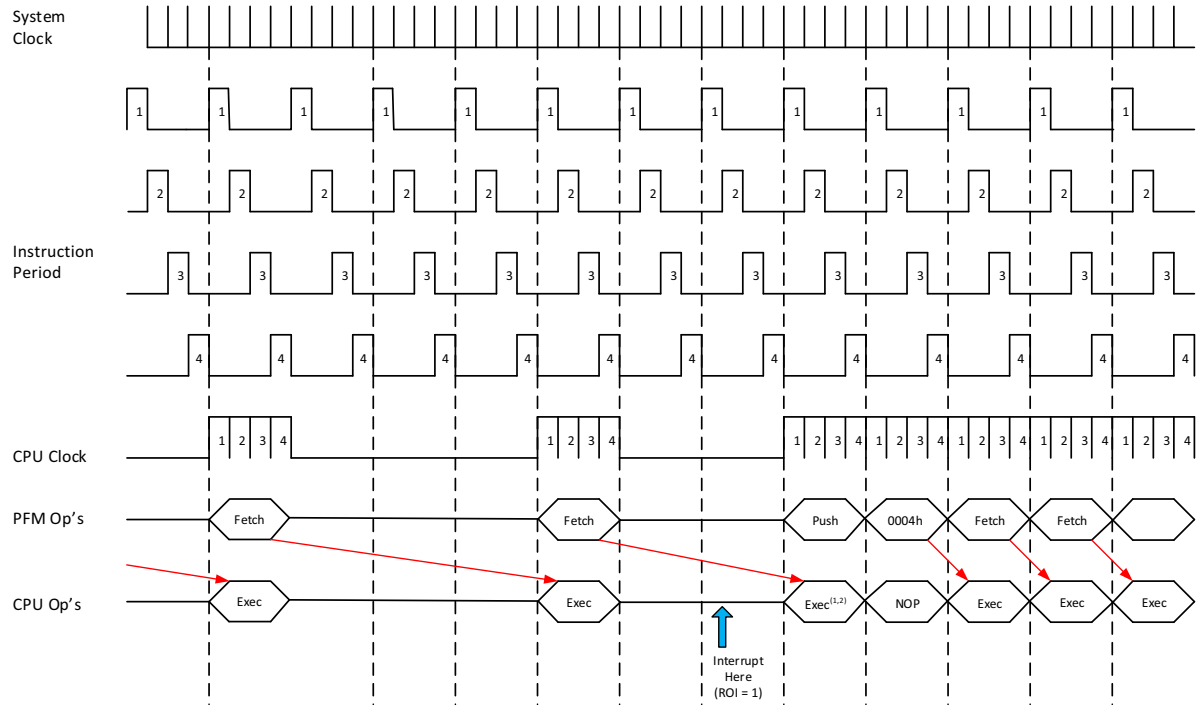

Note 1: Multi-cycle instructions are executed to completion before fetching 0004h.
2: If the pre-fetched instruction clears GIE, the ISR will not occur, but DOZEN is still cleared and the CPU will resume execution at full speed.

11.2 Sleep Mode

Sleep mode is entered by executing the `SLEEP` instruction, while the Idle Enable (IDLEN) bit of the CPUDOZE register is clear (IDLEN = `0`). If the `SLEEP` instruction is executed while the IDLEN bit is set (IDLEN = `1`), the CPU will enter the Idle mode (**Section 11.2.3 "Low-Power Sleep Mode"**).

Upon entering Sleep mode, the following conditions exist:

1. WWDT will be cleared but keeps running if enabled for operation during Sleep
2. The $\overline{PD}$ bit of the STATUS register is cleared
3. The $\overline{TO}$ bit of the STATUS register is set
4. CPU Clock and System Clock
5. 31 kHz LFINTOSC, HFINTOSC and SOSC are unaffected and peripherals using them may continue operation in Sleep.
6. ADC is unaffected if the dedicated FRC oscillator is selected the conversion will be left abandoned if FOSC is selected and ADRES will have an incorrect value
7. I/O ports maintain the status they had before Sleep was executed (driving high, low, or high-impedance). This does not apply in the case of any asynchronous peripheral which is active and may affect the I/O port value
8. Resets other than WWDT are not affected by Sleep mode

Refer to individual chapters for more details on peripheral operation during Sleep.

To minimize current consumption, the following conditions should be considered:

- I/O pins should not be floating
- External circuitry sinking current from I/O pins
- Internal circuitry sourcing current from I/O pins
- Current draw from pins with internal weak pull-ups
- Modules using any oscillator

I/O pins that are high-impedance inputs should be pulled to VDD or VSS externally to avoid switching currents caused by floating inputs.

Any module with a clock source that is not FOSC can be enabled. Examples of internal circuitry that might be sourcing current include modules such as the DAC and FVR modules. See **Section 21.0 "5-Bit Digital-to-Analog Converter (DAC1) Module"**, **Section 18.0 "Fixed Voltage Reference (FVR)"** for more information on these modules.

11.2.1 WAKE-UP FROM SLEEP

The device can wake-up from Sleep through one of the following events:

1. External Reset input on $\overline{\text{MCLR}}$ pin, if enabled.
2. BOR Reset, if enabled.
3. POR Reset.
4. Watchdog Timer, if enabled.
5. Any external interrupt.
6. Interrupts by peripherals capable of running during Sleep (see individual peripheral for more information).

The first three events will cause a device Reset. The last three events are considered a continuation of program execution. To determine whether a device Reset or wake-up event occurred, refer to **Section 8.14 "Determining the Cause of a Reset"**.

When the SLEEP instruction is being executed, the next instruction (PC + 1) is prefetched. For the device to wake-up through an interrupt event, the corresponding interrupt enable bit must be enabled. Wake-up will occur regardless of the state of the GIE bit. If the GIE bit is disabled, the device continues execution at the instruction after the SLEEP instruction. If the GIE bit is enabled, the device executes the instruction after the SLEEP instruction, the device will then call the Interrupt Service Routine. In cases where the execution of the instruction following SLEEP is not desirable, the user should have a NOP after the SLEEP instruction.

The WWDT is cleared when the device wakes-up from Sleep, regardless of the source of wake-up.

11.2.2 WAKE-UP USING INTERRUPTS

When global interrupts are disabled (GIE cleared) and any interrupt source, with the exception of the clock switch interrupt, has both its interrupt enable bit and interrupt flag bit set, one of the following will occur:

- If the interrupt occurs **before** the execution of a `SLEEP` instruction
  - `SLEEP` instruction will execute as a `NOP`
  - WWDT and WWDT prescaler will not be cleared
  - $\overline{TO}$ bit of the STATUS register will not be set
  - $\overline{PD}$ bit of the STATUS register will not be cleared
- If the interrupt occurs **during or after** the execution of a `SLEEP` instruction
  - `SLEEP` instruction will be completely executed
  - Device will immediately wake-up from Sleep
  - WWDT and WWDT prescaler will be cleared
  - $\overline{TO}$ bit of the STATUS register will be set
  - $\overline{PD}$ bit of the STATUS register will be cleared

Even if the flag bits were checked before executing a `SLEEP` instruction, it may be possible for flag bits to become set before the `SLEEP` instruction completes. To determine whether a `SLEEP` instruction executed, test the $\overline{PD}$ bit. If the $\overline{PD}$ bit is set, the `SLEEP` instruction was executed as a `NOP`.

FIGURE 11-2: WAKE-UP FROM SLEEP THROUGH INTERRUPT

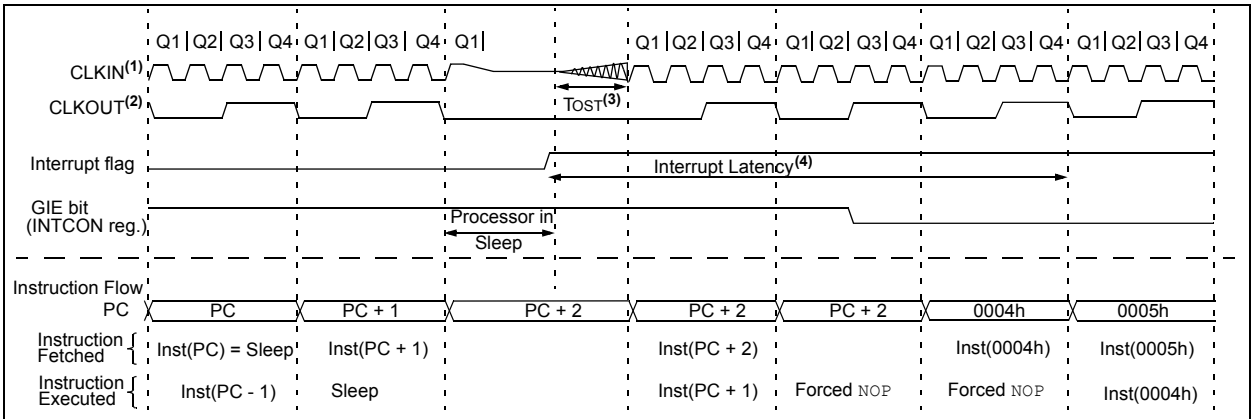

Note 1: External clock. High, Medium, Low mode assumed.
2: CLKOUT is shown here for timing reference.
3: TOST = 1024 TOSC. This delay does not apply to EC and INTOSC Oscillator modes.
4: GIE = `1` assumed. In this case after wake-up, the processor calls the ISR at 0004h. If GIE = `0`, execution will continue in-line.

11.2.3 LOW-POWER SLEEP MODE

The PIC16F19155/56/75/76/85/86 device contains an internal Low Dropout (LDO) voltage regulator, which allows the device I/O pins to operate at voltages up to 5.5V while the internal device logic operates at a lower voltage. The LDO and its associated reference circuitry must remain active when the device is in Sleep mode.

The PIC16F19155/56/75/76/85/86 allows the user to optimize the operating current in Sleep, depending on the application requirements.

Low-Power Sleep mode can be selected by setting the VREGPM bit of the VREGCON register. Depending on the configuration of these bits, the LDO and reference circuitry are placed in a low-power state when the device is in Sleep.

11.2.3.1 Sleep Current vs. Wake-up Time

In the default operating mode, the LDO and reference circuitry remain in the normal configuration while in Sleep. The device is able to exit Sleep mode quickly since all circuits remain active. In Low-Power Sleep mode, when waking-up from Sleep, an extra delay time is required for these circuits to return to the normal configuration and stabilize.

The Low-Power Sleep mode is beneficial for applications that stay in Sleep mode for long periods of time. The Normal mode is beneficial for applications that need to wake from Sleep quickly and frequently.

11.2.3.2 Peripheral Usage in Sleep

Some peripherals that can operate in Sleep mode will not operate properly with the Low-Power Sleep mode selected. The Low-Power Sleep mode is intended for use with these peripherals:

- Brown-out Reset (BOR)
- Windowed Watchdog Timer (WWDT)
- External interrupt pin/interrupt-on-change pins
- Timer1 (with external clock source)

It is the responsibility of the end user to determine what is acceptable for their application when setting the VREGPM settings in order to ensure operation in Sleep.

Note:	The PIC16LF19155/56/75/76/85/86 does not have a configurable Low-Power Sleep mode. PIC16LF19155/56/75/76/85/86 is an unregulated device and is always in the lowest power state when in Sleep, with no wake-up time penalty. This device has a lower maximum VDD and I/O voltage than the PIC16F19155/56/75/76/85/86. See **Section 39.0 "Electrical Specifications"** for more information.

11.3 Idle Mode

When the Idle Enable (IDLEN) bit is clear (IDLEN = 0), the SLEEP instruction will put the device into full Sleep mode (see **Section 11.2 "Sleep Mode"**). When IDLEN is set (IDLEN = 1), the SLEEP instruction will put the device into Idle mode. In Idle mode, the CPU and memory operations are halted, but the peripheral clocks continue to run. This mode is similar to Doze mode, except that in Idle both the CPU and PFM are shut off.

Note:	Peripherals using FOSC will continue running while in Idle (but not in Sleep). Peripherals using HFINTOSC, LFINTOSC, or SOSC will continue running in both Idle and Sleep.

Note:	If CLKOUT is enabled (CLKOUT = 0, Configuration Word 1), the output will continue operating while in Idle.

11.3.0.1 Idle and Interrupts

Idle mode ends when an interrupt occurs (even if GIE = 0), but IDLEN is not changed. The device can re-enter Idle by executing the SLEEP instruction.

If Recover-on-Interrupt is enabled (ROI = 1), the interrupt that brings the device out of Idle also restores full-speed CPU execution when doze is also enabled.

11.3.0.2 Idle and WWDT

When in Idle, the WWDT Reset is blocked and will instead wake the device. The WWDT wake-up is not an interrupt, therefore ROI does not apply.

Note:	The WWDT can bring the device out of Idle, in the same way it brings the device out of Sleep. The DOZEN bit is not affected.

11.4 Register Definitions: Voltage Regulator and Doze Control

REGISTER 11-1: VREGCON: VOLTAGE REGULATOR CONTROL REGISTER (1)

U-0	U-0	U-0	U-0	U-0	U-0	R/W-0/0	U-0
—	—	—	—	—	—	VREGPM	—
bit 7							bit 0

Legend:		
R = Readable bit	W = Writable bit	U = Unimplemented bit, read as ‘0’
u = Bit is unchanged	x = Bit is unknown	-n/n = Value at POR and BOR/Value at all other Resets
‘1’ = Bit is set	‘0’ = Bit is cleared	

bit 7-2 **Unimplemented:** Read as ‘0’

bit 1 **VREGPM**: Voltage Regulator Power Mode Selection bit
- 1 = Low-Power Sleep mode enabled in Sleep(2)
  Draws lowest current in Sleep, slower wake-up
- 0 = Normal Power mode enabled in Sleep(2)
  Draws higher current in Sleep, faster wake-up

bit 0 **Unimplemented:** Read as ‘0’

Note 1: PIC16F19155/56/75/76/85/86 only.

2: See **Section 39.0 “Electrical Specifications”**.

REGISTER 11-2: CPUDOZE: DOZE AND IDLE REGISTER

R/W-0/0	R/W/HC/HS-0/0	R/W-0/0	R/W/HC/HS-0/0	U-0	R/W-0/0	R/W-0/0	R/W-0/0
IDLEN	DOZEN(1,2)	ROI	DOE	—	DOZE<2:0>		
bit 7							bit 0

Legend:		
R = Readable bit	W = Writable bit	U = Unimplemented bit, read as ‘0’
u = Bit is unchanged	x = Bit is unknown	-n/n = Value at POR and BOR/Value at all other Resets
‘1’ = Bit is set	‘0’ = Bit is cleared	HC = Hardware clear-able HS = Hardware set-able

bit 7 **IDLEN:** Idle Enable bit
1 = A SLEEP instruction places device into Idle mode
0 = A SLEEP instruction places the device into full Sleep mode

bit 6 **DOZEN:** Doze Enable bit(1)
1 = Places the CPU into Doze mode
0 = Places the CPU into normal mode of operation

bit 5 **ROI:** Recover-on-Interrupt bit(1)
1 = Entering the Interrupt Service Routine (ISR) makes DOZEN = 0
0 = Entering ISR does not change DOZEN

bit 4 **DOE:** Doze on Exit bit(1)
1 = Exiting ISR makes DOZEN = 1
0 = Exiting ISR does not change DOZEN

bit 3 **Unimplemented:** Read as ‘0’

bit 2-0 **DOZE<2:0>:** Ratio of CPU Instruction Cycles to Peripheral Instruction Cycles
111 =1:256
110 =1:128
101 =1:64
100 =1:32
011 =1:16
010 =1:8
001 =1:4
000 =1:2

Note 1: Refer to Table 11-1 for more information.

TABLE 11-2: SUMMARY OF REGISTERS ASSOCIATED WITH POWER-DOWN MODE

Name	Bit 7	Bit 6	Bit 5	Bit 4	Bit 3	Bit 2	Bit 1	Bit 0	Register on Page
STATUS	—	—	—	$\overline{TO}$	$\overline{PD}$	Z	DC	C	50
VREGCON	—	—	—	—	—	—	VREGPM	—	189
CPUDOZE	IDLEN	DOZEN	ROI	DOE	—	DOZE<2:0>			190
WDTCON0	—	—	WDTPS<4:0>					SWDTEN	196

Legend: — = unimplemented location, read as '0'. Shaded cells are not used in Power-Down mode.

12.0 WINDOWED WATCHDOG TIMER (WWDT)

The Windowed Watchdog Timer (WWDT) is a system timer that generates a Reset if the firmware does not issue a `CLRWDT` instruction within the time-out period. The Watchdog Timer is typically used to recover the system from unexpected events. The Windowed Watchdog Timer (WWDT) differs in that `CLRWDT` instructions are only accepted when they are performed within a specific window during the time-out period.

The WWDT has the following features:

- Selectable clock source
- Multiple operating modes
  - WWDT is always on
  - WWDT is off when in Sleep
  - WWDT is controlled by software
  - WWDT is always off
- Configurable time-out period is from 1 ms to 256 seconds (nominal)
- Configurable window size from 12.5 to 100 percent of the time-out period
- Multiple Reset conditions
- Operation during Sleep

FIGURE 12-1: WATCHDOG TIMER BLOCK DIAGRAM

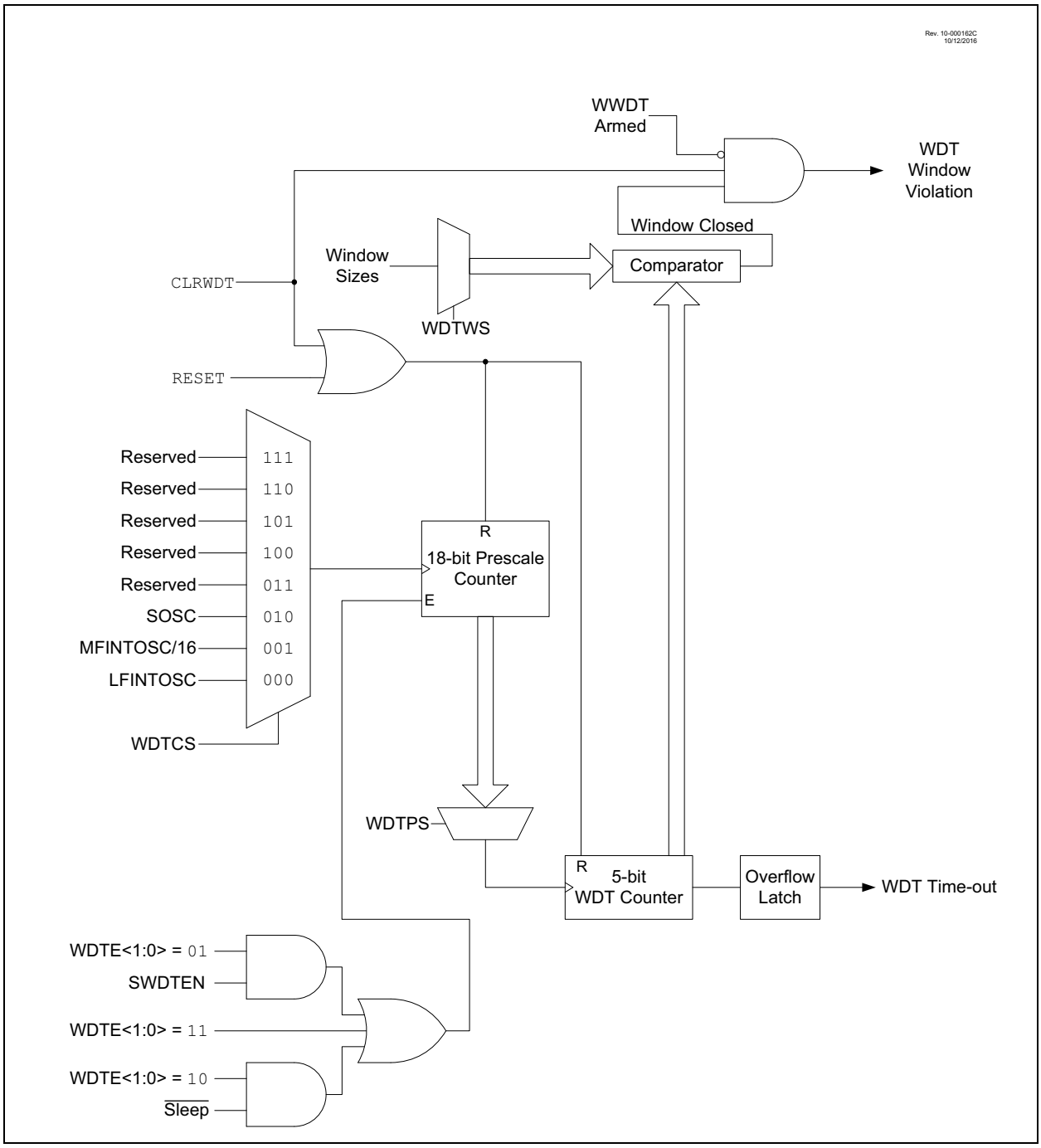

12.1 Independent Clock Source

The WWDT can derive its time base from either the 31 kHz LFINTOSC, or 31.25 kHz MFINTOSC internal oscillators or 32.768 kHz SOSC, depending on the value of either the WDTCCS<2:0> Configuration bits or the WDTCS<2:0> bits of WDTCON1. Time intervals in this chapter are based on a minimum nominal interval of 1 ms. See **Section 39.0 "Electrical Specifications"** for LFINTOSC and MFINTOSC tolerances.

12.2 WWDT Operating Modes

The Watchdog Timer module has four operating modes controlled by the WDTE<1:0> bits in Configuration Words. See Table 12-1.

12.2.1 WWDT IS ALWAYS ON

When the WDTE bits of Configuration Words are set to '11', the WWDT is always on.

WWDT protection is active during Sleep.

12.2.2 WWDT IS OFF IN SLEEP

When the WDTE bits of Configuration Words are set to '10', the WWDT is on, except in Sleep.

WWDT protection is not active during Sleep.

12.2.3 WWDT CONTROLLED BY SOFTWARE

When the WDTE bits of Configuration Words are set to '01', the WWDT is controlled by the SWDTEN bit of the WDTCON0 register.

12.2.4 WWDT IS OFF

When the WDTE bits of the Configuration Word are set to '00', the WWDT is always OFF.

WWDT protection is unchanged by Sleep. See Table 12-1 for more details.

TABLE 12-1: WWDT OPERATING MODES

WDTE<1:0>	SWDTEN	Device Mode	WWDT Mode
11	X	X	Active
10	X	Awake	Active
		Sleep	Disabled
01	1	X	Active
	0	X	Disabled
00	X	X	Disabled

12.3 Time-Out Period

The WDTPS bits of the WDTCON0 register set the time-out period from 1 ms to 256 seconds (nominal). After a Reset, the default time-out period is two seconds.

12.4 Watchdog Window

The Watchdog Timer has an optional Windowed mode that is controlled by the WDTCWS<2:0> Configuration bits and WINDOW<2:0> bits of the WDTCON1 register. In the Windowed mode, the `CLRWDT` instruction must occur within the allowed window of the WWDT period. Any `CLRWDT` instruction that occurs outside of this window will trigger a window violation and will cause a WWDT Reset, similar to a WWDT time out. See Figure 12-2 for an example.

The window size is controlled by the WDTCWS<2:0> Configuration bits, or the WINDOW<2:0> bits of WDTCON1, if WDTCWS<2:0> = `111`.

In the event of a window violation, a Reset will be generated and the $\overline{\text{WDTWV}}$ bit of the PCON register will be cleared. This bit is set by a POR or can be set in firmware.

12.5 Clearing the WWDT

The WWDT is cleared when any of the following conditions occur:

- Any Reset
- Valid `CLRWDT` instruction is executed
- Device enters Sleep
- Device wakes up from Sleep
- WWDT is disabled
- Oscillator Start-up Timer (OST) is running
- Any write to the WDTCON0 or WDTCON1 registers

12.5.1 `CLRWDT` CONSIDERATIONS (WINDOWED MODE)

When in Windowed mode, the WWDT must be armed before a `CLRWDT` instruction will clear the timer. This is performed by reading the WDTCON0 register. Executing a `CLRWDT` instruction without performing such an arming action will trigger a window violation.

See Table 12-2 for more information.

12.6 Operation During Sleep

When the device enters Sleep, the WWDT is cleared. If the WWDT is enabled during Sleep, the WWDT resumes counting. When the device exits Sleep, the WWDT is cleared again.

The WWDT remains clear until the OST, if enabled, completes. See **Section 9.0 "Oscillator Module (with Fail-Safe Clock Monitor)"** for more information on the OST.

When a WWDT time-out occurs while the device is in Sleep, no Reset is generated. Instead, the device wakes up and resumes operation. The $\overline{TO}$ and $\overline{PD}$ bits in the STATUS register are changed to indicate the event. The $\overline{RWDT}$ bit in the PCON register can also be used. See **Section 4.3.2.1 "STATUS Register"** for more information.

TABLE 12-2: WWDT CLEARING CONDITIONS

Conditions	WWDT
WDTE<1:0> = 00	Cleared
WDTE<1:0> = 01 and SWDTEN = 0	
WDTE<1:0> = 10 and enter Sleep	
CLRWDT Command	
Oscillator Fail Detected	
Exit Sleep + System Clock = SOSC, EXTOSC, INTOSC	
Change INTOSC divider (IRCF bits)	Unaffected

FIGURE 12-2: WINDOW PERIOD AND DELAY

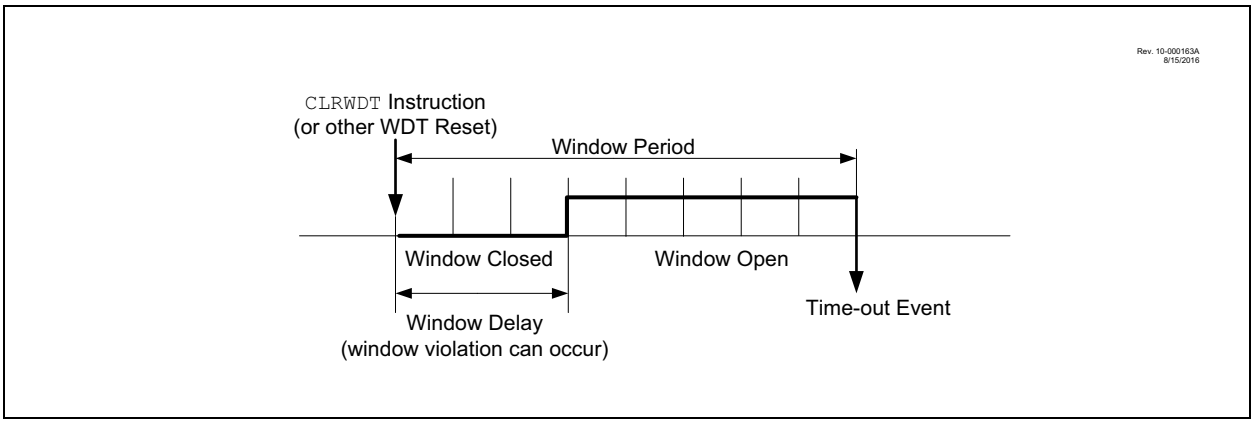

12.7 Register Definitions: Windowed Watchdog Timer Control

REGISTER 12-1: WDTCON0: WATCHDOG TIMER CONTROL REGISTER 0

U-0	U-0	R/W(3)-q/q(2)	R/W(3)-q/q(2)	R/W(3)-q/q(2)	R/W(3)-q/q(2)	R/W(3)-q/q(2)	R/W-0/0
—	—	WDTPS<4:0>(1)					SWDTEN
bit 7							bit 0

Legend:		
R = Readable bit	W = Writable bit	U = Unimplemented bit, read as ‘0’
u = Bit is unchanged	x = Bit is unknown	-n/n = Value at POR and BOR/Value at all other Resets
‘1’ = Bit is set	‘0’ = Bit is cleared	q = Value depends on condition

bit 7-6 **Unimplemented:** Read as ‘0’

bit 5-1 **WDTPS<4:0>:** Watchdog Timer Prescale Select bits(1)

Bit Value = Prescale Rate

11111 = Reserved. Results in minimum interval (1:32)
•
•
•
10011 = Reserved. Results in minimum interval (1:32)

10010 = 1:8388608 (2^{23}) (Interval 256s nominal)
10001 = 1:4194304 (2^{22}) (Interval 128s nominal)
10000 = 1:2097152 (2^{21}) (Interval 64s nominal)
01111 = 1:1048576 (2^{20}) (Interval 32s nominal)
01110 = 1:524288 (2^{19}) (Interval 16s nominal)
01101 = 1:262144 (2^{18}) (Interval 8s nominal)
01100 = 1:131072 (2^{17}) (Interval 4s nominal)
01011 = 1:65536 (Interval 2s nominal) (Reset value)
01010 = 1:32768 (Interval 1s nominal)
01001 = 1:16384 (Interval 512 ms nominal)
01000 = 1:8192 (Interval 256 ms nominal)
00111 = 1:4096 (Interval 128 ms nominal)
00110 = 1:2048 (Interval 64 ms nominal)
00101 = 1:1024 (Interval 32 ms nominal)
00100 = 1:512 (Interval 16 ms nominal)
00011 = 1:256 (Interval 8 ms nominal)
00010 = 1:128 (Interval 4 ms nominal)
00001 = 1:64 (Interval 2 ms nominal)
00000 = 1:32 (Interval 1 ms nominal)

bit 0 **SWDTEN:** Software Enable/Disable for Watchdog Timer bit

If WDTE<1:0> = 1x:
This bit is ignored.
If WDTE<1:0> = 01:
1 = WDT is turned on
0 = WDT is turned off
If WDTE<1:0> = 00:
This bit is ignored.

Note 1: Times are approximate. WWDT time is based on 31 kHz LFINTOSC.

2: When WDTCPS <4:0> in CONFIG3 = 11111, the Reset value of WDTPS<4:0> is 01011. Otherwise, the Reset value of WDTPS<4:0> is equal to WDTCPS<4:0> in CONFIG3.

3: When WDTCPS <4:0> in CONFIG3 ≠ 11111, these bits are read-only.

REGISTER 12-2: WDTCON1: WATCHDOG TIMER CONTROL REGISTER 1

U-0	R/W(3)-q/q(1)	R/W(3)-q/q(1)	R/W(3)-q/q(1)	U-0	R/W(4)-q/q(2)	R/W(4)-q/q(2)	R/W(4)-q/q(2)
—	WDTCS<2:0>			—	WINDOW<2:0>		
bit 7							bit 0

Legend:		
R = Readable bit	W = Writable bit	U = Unimplemented bit, read as ‘0’
u = Bit is unchanged	x = Bit is unknown	-n/n = Value at POR and BOR/Value at all other Resets
‘1’ = Bit is set	‘0’ = Bit is cleared	q = Value depends on condition

bit 7 **Unimplemented:** Read as ‘0’

bit 6-4 **WDTCS<2:0>:** Watchdog Timer Clock Select bits

111 = Reserved
•
•
•
010 = SOSC 32.768 kHz
001 = MFINTOSC/16 31.25 kHz
000 = LFINTOSC 31 kHz

bit 3 **Unimplemented:** Read as ‘0’

bit 2-0 **WINDOW<2:0>:** Watchdog Timer Window Select bits

WINDOW<2:0>	Window delay Percent of time	Window opening Percent of time
111	N/A	100
110	12.5	87.5
101	25	75
100	37.5	62.5
011	50	50
010	62.5	37.5
001	75	25
000	87.5	12.5

Note 1: If WDTCCS <2:0> in CONFIG3 = 111, the Reset value of WDTCS<2:0> is 000.

2: The Reset value of WINDOW<2:0> is determined by the value of WDTCWS<2:0> in the CONFIG3 register.

3: If WDTCCS<2:0> in CONFIG3 ≠ 111, these bits are read-only.

4: If WDTCWS<2:0> in CONFIG3 ≠ 111, these bits are read-only.

REGISTER 12-3: WDTPSL: WDT PRESCALE SELECT LOW BYTE REGISTER

R-0/0	R-0/0	R-0/0	R-0/0	R-0/0	R-0/0	R-0/0	R-0/0
PSCNT<7:0>(1)							
bit 7							bit 0

Legend:		
R = Readable bit	W = Writable bit	U = Unimplemented bit, read as ‘0’
u = Bit is unchanged	x = Bit is unknown	-n/n = Value at POR and BOR/Value at all other Resets
‘1’ = Bit is set	‘0’ = Bit is cleared	

bit 7-0 **PSCNT<7:0>**: Prescale Select Low Byte bits(1)

Note 1: The 18-bit WDT prescale value, PSCNT<17:0> includes the WDTPSL, WDTPSH and the lower bits of the WDTTMR registers. PSCNT<17:0> is intended for debug operations and should be read during normal operation.

REGISTER 12-4: WDTPSH: WDT PRESCALE SELECT HIGH BYTE REGISTER

R-0/0	R-0/0	R-0/0	R-0/0	R-0/0	R-0/0	R-0/0	R-0/0
PSCNT<15:8>(1)							
bit 7							bit 0

Legend:		
R = Readable bit	W = Writable bit	U = Unimplemented bit, read as ‘0’
u = Bit is unchanged	x = Bit is unknown	-n/n = Value at POR and BOR/Value at all other Resets
‘1’ = Bit is set	‘0’ = Bit is cleared	

bit 7-0 **PSCNT<15:8>**: Prescale Select High Byte bits(1)

Note 1: The 18-bit WDT prescale value, PSCNT<17:0> includes the WDTPSL, WDTPSH and the lower bits of the WDTTMR registers. PSCNT<17:0> is intended for debug operations and should be read during normal operation.

REGISTER 12-5: WDTTMR: WDT TIMER REGISTER

U-0	R-0/0	R-0/0	R-0/0	R-0/0	R-0/0	R-0/0	R-0/0
—	WDTTMR<3:0>				STATE	PSCNT<17:16>(1)	
bit 7							bit 0

Legend:		
R = Readable bit	W = Writable bit	U = Unimplemented bit, read as ‘0’
u = Bit is unchanged	x = Bit is unknown	-n/n = Value at POR and BOR/Value at all other Resets
‘1’ = Bit is set	‘0’ = Bit is cleared	

bit 7 **Unimplemented:** Read as ‘0’

bit 6-3 **WDTTMR<3:0>**: Watchdog Timer Value bits

bit 2 **STATE**: WDT Armed Status bit
1 = WDT is armed
0 = WDT is not armed

bit 1-0 **PSCNT<17:16>**: Prescale Select Upper Byte bits(1)

Note 1: The 18-bit WDT prescale value, PSCNT<17:0> includes the WDTPSL, WDTPSH and the lower bits of the WDTTMR registers. PSCNT<17:0> is intended for debug operations and should be read during normal operation.

TABLE 12-3: SUMMARY OF REGISTERS ASSOCIATED WITH WINDOWED WATCHDOG TIMER

Name	Bit 7	Bit 6	Bit 5	Bit 4	Bit 3	Bit 2	Bit 1	Bit 0	Register on Page
OSCCON1	—	NOSC<2:0>			NDIV<3:0>				152
OSCCON2	—	COSC<2:0>			CDIV<3:0>				152
OSCCON3	CSWHOLD	SOSCPWR	—	ORDY	NOSCR	—	—	—	154
PCON0	STKOVF	STKUNF	$\overline{\text{WDTWV}}$	$\overline{\text{RWDT}}$	$\overline{\text{RMCLR}}$	$\overline{\text{RI}}$	$\overline{\text{POR}}$	$\overline{\text{BOR}}$	140
STATUS	—	—	—	$\overline{\text{TO}}$	$\overline{\text{PD}}$	Z	DC	C	50
WDTCON0	—	—	WDTPS<4:0>					SWDTEN	196
WDTCON1	—	WDTCS<2:0>			—	WINDOW<2:0>			197
WDTPSL	PSCNT<7:0>								198
WDTPSH	PSCNT<15:8>								198
WDTTMR	—	WDTTMR<3:0>				STATE	PSCNT<17:16>		198

Legend: – = unimplemented locations read as '0'. Shaded cells are not used by Watchdog Timer.

TABLE 12-4: SUMMARY OF CONFIGURATION WORD WITH WATCHDOG TIMER

Name	Bits	Bit -/7	Bit -/6	Bit 13/5	Bit 12/4	Bit 11/3	Bit 10/2	Bit 9/1	Bit 8/0	Register on Page
CONFIG1	13:8	—	—	FCMEN	—	CSWEN	LCDPEN	$\overline{\text{VBATEN}}$	$\overline{\text{CLKOUTEN}}$	120
	7:0	—	RSTOSC<2:0>			—	FEXTOSC<2:0>			

Legend: — = unimplemented location, read as '0'. Shaded cells are not used by Watchdog Timer.

13.0 NONVOLATILE MEMORY (NVM) CONTROL

NVM is separated into two types:

- Program Flash Memory (PFM)
- Data EEPROM Memory

NVM is accessible by using both the FSR and the INDF registers, or through the NVMREG register interface. The write time is controlled by an on-chip timer. The write/erase voltages are generated by an on-chip charge pump rated to operate over the operating voltage range of the device. NVM can be protected in two ways: by either code protection or write protection. Code protection (CP and CPD bits in Configuration Word 5) disables access, reading and writing, to both the PFM and EEPROM via external device programmers. Code protection does not affect the self-write and erase functionality. Code protection can only be Reset by a device programmer performing a Bulk Erase to the device, clearing all nonvolatile memory, Configuration bits, and User IDs. Write protection prohibits self-write and erase to a portion or all of the PFM, as defined by the WRT<1:0> bits of Configuration Word 4. Write protection does not affect a device programmer's ability to read, write, or erase the device.

13.1 Program Flash Memory (PFM)

PFM consists of an array of 14-bit words as user memory, with additional words for User ID information, Configuration Words, and interrupt vectors. PFM provides storage locations for:

- User program instructions
- User defined data

PFM data can be read and/or written to through:

- CPU instruction fetch (read-only)
- FSR/INDF indirect access (read-only) (**Section 13.3 "FSR and INDF Access"**)
- NVMREG access (**Section 13.4 "NVMREG Access"**
- In-Circuit Serial Programming™ (ICSP™)

Read operations return a single word of memory. When write and erase operations are done on a row basis, the row size is defined in Table 13-1. PFM will erase to a logic '1' and program to a logic '0'.

TABLE 13-1: FLASH MEMORY ORGANIZATION BY DEVICE

Device	Row Erase (words)	Write Latches (words)	Total Program Flash (words)
PIC16(L)F19155	32	32	8k
PIC16(L)F19175	32	32	8k
PIC16(L)F19185	32	32	8k
PIC16(L)F19156	32	32	16k
PIC16(L)F19176	32	32	16k
PIC16(L)F19186	32	32	16k

It is important to understand the PFM memory structure for erase and programming operations. PFM is arranged in rows. A row consists of 32 14-bit program memory words. A row is the minimum size that can be erased by user software.

All or a portion of this row can be programmed. Data to be written into the program memory row is written to 14-bit wide data write latches. These latches are not directly accessible, but may be loaded via sequential writes to the NVMDATH:NVMDATL register pair.

Note: To modify only a portion of a previously programmed row, the contents of the entire row must be read. Then, the new data and retained data can be written into the write latches to reprogram the row of PFM. However, any unprogrammed locations can be written without first erasing the row. In this case, it is not necessary to save and rewrite the other previously programmed locations

13.1.1 PROGRAM MEMORY VOLTAGES

The PFM is readable and writable during normal operation over the full VDD range.

13.1.1.1 Programming Externally

The program memory cell and control logic support write and Bulk Erase operations down to the minimum device operating voltage.

13.1.1.2 Self-programming

The program memory cell and control logic will support write and row erase operations at high VDD. Bulk Erase is not available when self-programming.

13.2 Data EEPROM Memory

Data EEPROM Memory consists of 256 bytes of user data memory. The EEPROM provides storage locations for 8-bit user defined data. EEPROM can be read and/or written through:

- FSR/INDF indirect access (**Section 13.3 "FSR and INDF Access"**)
- NVMREG access (**Section 13.4 "NVMREG Access"**)
- In-Circuit Serial Programming™ (ICSP™)

Unlike PFM, which must be written to by row, EEPROM can be written to word by word.

13.3 FSR and INDF Access

The FSR and INDF registers allow indirect access to the PFM.

13.3.1 FSR READ

With the intended address loaded into an FSR register a `MOVIW` instruction or read of INDF will read data from the PFM.

Reading from NVM requires one instruction cycle. The CPU operation is suspended during the read, and resumes immediately after. Read operations return a single byte of memory.

13.3.2 FSR WRITE

Writing/erasing the NVM through the FSR registers (ex. `MOVWI` instruction) is not supported in the PIC16(L)F19155/56/75/76/85/86 devices.

13.4 NVMREG Access

The NVMREG interface allows read/write access to all the locations accessible by FSRs, and also read/write access to the User ID locations, and read-only access to the device identification, revision, and Configuration data.

Writing, or erasing of NVM via the NVMREG interface is prevented when the device is write-protected.

13.4.1 NVMREG READ OPERATION

To read a NVM location using the NVMREG interface, the user must:

1. Clear the NVMREGS bit of the NVMCON1 register if the user intends to access PFM locations, or set NMVREGS if the user intends to access User ID, or Configuration locations.
2. Write the desired address into the NVMADRH:NVMADRL register pair (Table 13-2).
3. Set the RD bit of the NVMCON1 register to initiate the read.

Once the read control bit is set, the CPU operation is suspended during the read, and resumes immediately after. The data is available in the very next cycle, in the NVMDATH:NVMDATL register pair; therefore, it can be read as two bytes in the following instructions.

NVMDATH:NVMDATL register pair will hold this value until another read or until it is written to by the user.

Upon completion, the RD bit is cleared by hardware.

FIGURE 13-1: FLASH PROGRAM MEMORY READ FLOWCHART

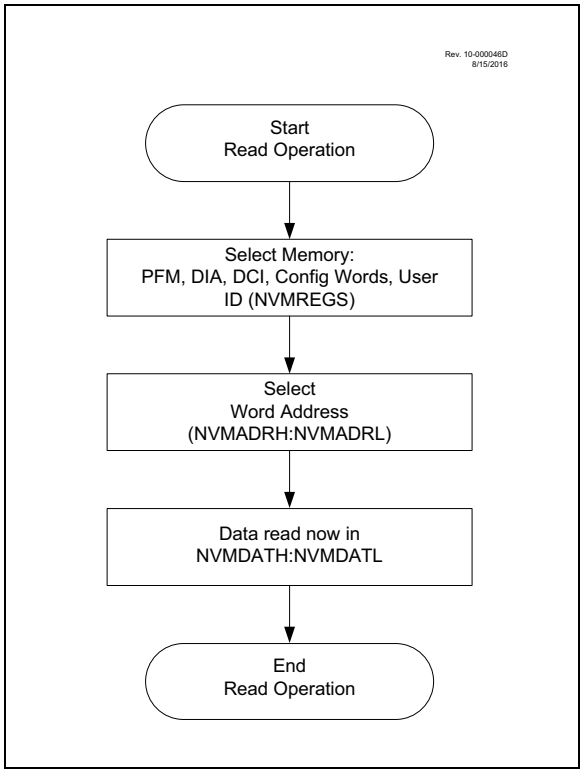

EXAMPLE 13-1: PFM PROGRAM MEMORY READ

```
* This code block will read 1 word of program
* memory at the memory address:
    PROG_ADDR_HI : PROG_ADDR_LO
*   data will be returned in the variables;
*   PROG_DATA_HI, PROG_DATA_LO

    BANKSEL  NVMADRL          ; Select Bank for NVMCON registers
    MOVLW    PROG_ADDR_LO     ;
    MOVWF    NVMADRL          ; Store LSB of address
    MOVLW    PROG_ADDR_HI     ;
    MOVWF    NVMADRH          ; Store MSB of address

    BCF      NVMCON1,NVMREGS  ; Do not select Configuration Space
    BSF      NVMCON1,RD       ; Initiate read

    MOVF     NVMDATL,W        ; Get LSB of word
    MOVWF    PROG_DATA_LO     ; Store in user location
    MOVF     NVMDATH,W        ; Get MSB of word
    MOVWF    PROG_DATA_HI     ; Store in user location
```

13.4.2 NVM UNLOCK SEQUENCE

The unlock sequence is a mechanism that protects the NVM from unintended self-write programming or erasing. The sequence must be executed and completed without interruption to successfully complete any of the following operations:

- PFM Row Erase
- Load of PFM write latches
- Write of PFM write latches to PFM memory
- Write of PFM write latches to User IDs

The unlock sequence consists of the following steps and must be completed in order:

- Write 55h to NVMCON2
- Write AAh to NMVCON2
- Set the WR bit of NVMCON1

Once the WR bit is set, the processor will stall internal operations until the operation is complete and then resume with the next instruction.

> **Note:** The two `NOP` instructions after setting the WR bit that were required in previous devices are not required for PIC16(L)F19155/56/75/76/85/86 devices. See Figure 13-2.

Since the unlock sequence must not be interrupted, global interrupts should be disabled prior to the unlock sequence and re-enabled after the unlock sequence is completed.

FIGURE 13-2: NVM UNLOCK SEQUENCE FLOWCHART

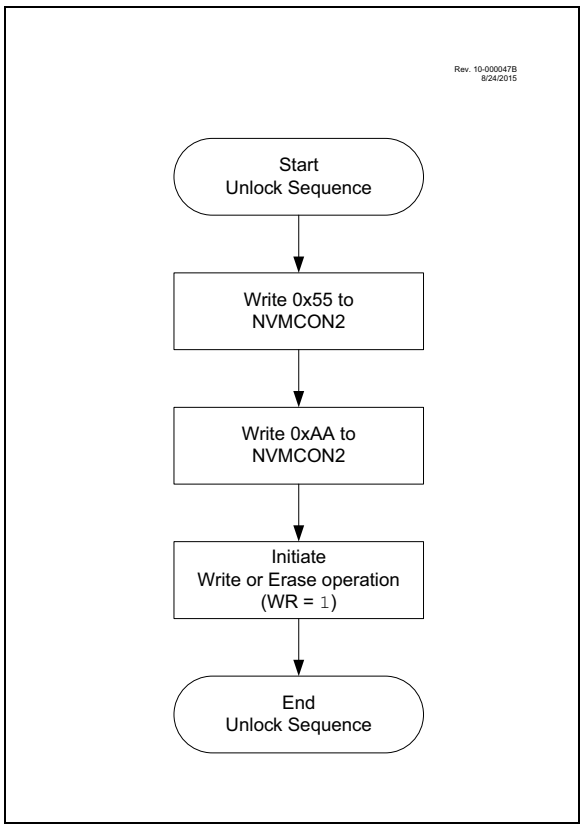

EXAMPLE 13-2: NVM UNLOCK SEQUENCE

```
BCF      INTCON, GIE      ; Recommended so sequence is not interrupted
BANKSEL  NVMCON1          ;
BSF      NVMCON1, WREN    ; Enable write/erase
MOVLW    55h              ; Load 55h
MOVWF    NVMCON2          ; Step 1: Load 55h into NVMCON2
MOVLW    AAh              ; Step 2: Load W with AAh
MOVWF    NVMCON2          ; Step 3: Load AAH into NVMCON2
BSF      NVMCON1, WR      ; Step 4: Set WR bit to begin write/erase
BSF      INTCON, GIE      ; Re-enable interrupts
```

Note 1: Sequence begins when NVMCON2 is written; steps 1-4 must occur in the cycle-accurate order shown.

2: Opcodes shown are illustrative; any instruction that has the indicated effect may be used.

13.4.3 NVMREG WRITE TO EEPROM

Writing to the EEPROM is accomplished by the following steps:

1. Set the NVMREGS and WREN bits of the NVMCON1 register.
2. Write the desired address (address + 7000h) into the NVMADRH:NVMADRL register pair (Table 13-2).
3. Perform the unlock sequence as described in **Section 13.4.2 “NVM Unlock Sequence”**.

A single EEPROM word is written with NVMDATA. The operation includes an implicit erase cycle for that word (it is not necessary to set the FREE bit), and requires many instruction cycles to finish. CPU execution continues in parallel and, when complete, WR is cleared by hardware, NVMIF is set, and an interrupt will occur if NVMIE is also set. Software must poll the WR bit to determine when writing is complete, or wait for the interrupt to occur. WREN will remain unchanged. Once the EEPROM write operation begins, clearing the WR bit will have no effect; the operation will continue to run to completion.

13.4.4 NVMREG ERASE OF PFM

Before writing to PFM, the word(s) to be written must be erased or previously unwritten. PFM can only be erased one row at a time. No automatic erase occurs upon the initiation of the write to PFM.

To erase a PFM row:

1. Clear the NVMREGS bit of the NVMCON1 register to erase PFM locations, or set the NMVREGS bit to erase User ID locations.
2. Write the desired address into the NVMADRH:NVMADRL register pair (Table 13-2).
3. Set the FREE and WREN bits of the NVMCON1 register.
4. Perform the unlock sequence as described in **Section 13.4.2 “NVM Unlock Sequence”**.

If the PFM address is write-protected, the WR bit will be cleared and the erase operation will not take place.

While erasing PFM, CPU operation is suspended, and resumes when the operation is complete. Upon completion, the NVMIF is set, and an interrupt will occur if the NVMIE bit is also set.

Write latch data is not affected by erase operations, and WREN will remain unchanged.

FIGURE 13-3: NVM ERASE FLOWCHART

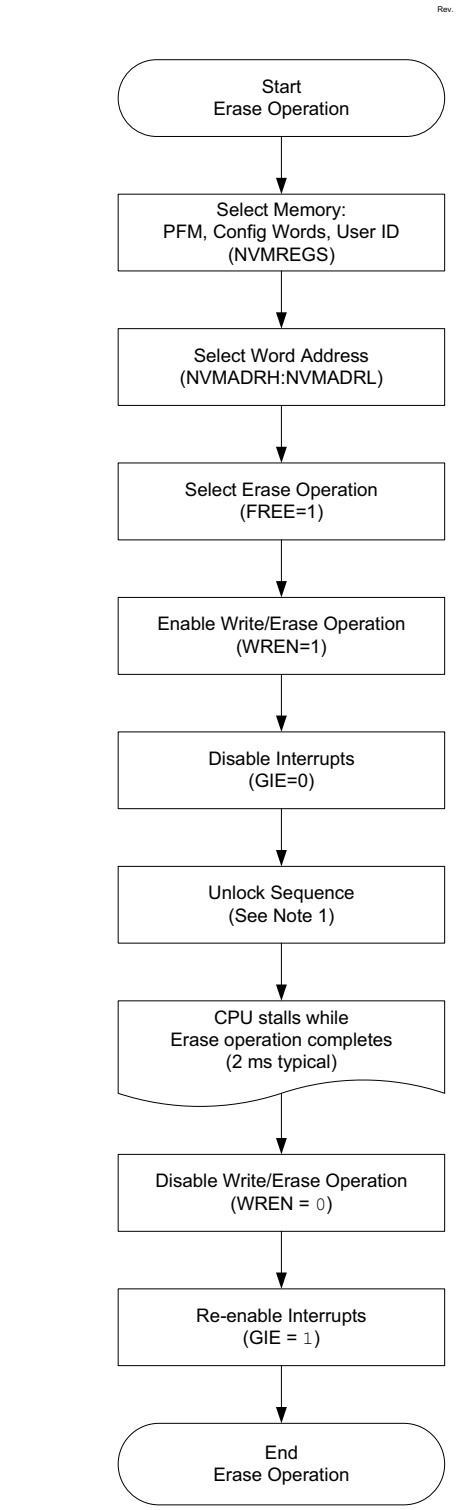

Note 1: See Figure 13-2.

EXAMPLE 13-3: ERASING ONE ROW OF PROGRAM FLASH MEMORY (PFM)

```
; This sample row erase routine assumes the following:
; 1.A valid address within the erase row is loaded in variables ADDRH:ADDRL
; 2.ADDRH and ADDRL are located in common RAM (locations 0x70 - 0x7F)

BANKSEL        NVMADRL
MOVF           ADDRL,W
MOVWF          NVMADRL              ; Load lower 8 bits of erase address boundary
MOVF           ADDRH,W
MOVWF          NVMADRH              ; Load upper 6 bits of erase address boundary
BCF            NVMCON1,NVMREGS      ; Choose PFM memory area
BSF            NVMCON1,FREE         ; Specify an erase operation
BSF            NVMCON1,WREN         ; Enable writes
BCF            INTCON,GIE           ; Disable interrupts during unlock sequence

; -------------------------------REQUIRED UNLOCK SEQUENCE:------------------------------

MOVLW          55h                  ; Load 55h to get ready for unlock sequence
MOVWF          NVMCON2              ; First step is to load 55h into NVMCON2
MOVLW          AAh                  ; Second step is to load AAh into W
MOVWF          NVMCON2              ; Third step is to load AAh into NVMCON2
BSF            NVMCON1,WR           ; Final step is to set WR bit

; ------------------------------------------------------------------------------------

BSF            INTCON,GIE           ; Re-enable interrupts, erase is complete
BCF            NVMCON1,WREN         ; Disable writes
```

TABLE 13-2: NVM ORGANIZATION AND ACCESS INFORMATION

Master Values			NVMREG Access			FSR Access	
Memory Function	**Program Counter (PC), ICSP™ Address**	**Memory Type**	**NVMREGS bit (NVMCON1)**	**NVMADR <14:0>**	**Allowed Operations**	**FSR Address**	**FSR Programming Address**
Reset Vector	0000h	PFM	0	0000h	Read Write	8000h	Read-Only
User Memory	0001h		0	0001h		8001h	
	0003h			0003h		8003h	
INT Vector	0004h		0	0004h		8004h	
User Memory	0005h		0	0005h		8005h	
	1FFFh(1) 3FFFh(2)			1FFFh(1) 3FFFh(2)		FFFFh	
User ID	8000h	PFM	1	0000h	Read Write	No Access	
	8003h			0003h			
Reserved	8004h	—	–	0004h	—		
Rev ID	8005h	PFM	1	0005h	Read-Only		
Device ID	8006h		1	0006h			
CONFIG1	8007h		1	0007h	Read Write		
CONFIG2	8008h		1	0008h			
CONFIG3	8009h		1	0009h			
CONFIG4	800Ah		1	000Ah			
CONFIG5	800Bh		1	000Bh	Read-Only		
DIA and DCI	8100h-82FFh	PFM and Hard coded	1	0100h-02FFh		No Access	
EEPROM	F000h-F0FFh	DFM	1	0000h-00FFh	Read Write	7000h-70FFh	Read-Only

Note 1: PIC16(L)F19155/75/85 only.

2: PIC16(L)F19156/76/86 only.

13.4.5 NVMREG WRITE TO PFM

Program memory is programmed using the following steps:

1. Load the address of the row to be programmed into NVMADRH:NVMADRL.
2. Load each write latch with data.
3. Initiate a programming operation.
4. Repeat steps 1 through 3 until all data is written.

Before writing to program memory, the word(s) to be written must be erased or previously unwritten. Program memory can only be erased one row at a time. No automatic erase occurs upon the initiation of the write.

Program memory can be written one or more words at a time. The maximum number of words written at one time is equal to the number of write latches. See Figure 13-4 (row writes to program memory with 32 write latches) for more details.

The write latches are aligned to the Flash row address boundary defined by the upper ten bits of NVMADRH:NVMADRL, (NVMADRH<6:0>:NVMADRL<7:5>) with the lower five bits of NVMADRL, (NVMADRL<4:0>) determining the write latch being loaded. Write operations do not cross these boundaries. At the completion of a program memory write operation, the data in the write latches is reset to contain 0x3FFF.

The following steps should be completed to load the write latches and program a row of program memory. These steps are divided into two parts. First, each write latch is loaded with data from the NVMDATH:NVMDATL using the unlock sequence with LWLO = `1`. When the last word to be loaded into the write latch is ready, the LWLO bit is cleared and the unlock sequence executed. This initiates the programming operation, writing all the latches into Flash program memory.

Note:	The special unlock sequence is required to load a write latch with data or initiate a Flash programming operation. If the unlock sequence is interrupted, writing to the latches or program memory will not be initiated.

1. Set the WREN bit of the NVMCON1 register.
2. Clear the NVMREGS bit of the NVMCON1 register.
3. Set the LWLO bit of the NVMCON1 register. When the LWLO bit of the NVMCON1 register is ‘`1`’, the write sequence will only load the write latches and will not initiate the write to Flash program memory.
4. Load the NVMADRH:NVMADRL register pair with the address of the location to be written.
5. Load the NVMDATH:NVMDATL register pair with the program memory data to be written.
6. Execute the unlock sequence (**Section 13.4.2 “NVM Unlock Sequence”**). The write latch is now loaded.
7. Increment the NVMADRH:NVMADRL register pair to point to the next location.
8. Repeat steps 5 through 7 until all but the last write latch has been loaded.
9. Clear the LWLO bit of the NVMCON1 register. When the LWLO bit of the NVMCON1 register is ‘`0`’, the write sequence will initiate the write to Flash program memory.
10. Load the NVMDATH:NVMDATL register pair with the program memory data to be written.
11. Execute the unlock sequence (**Section 13.4.2 “NVM Unlock Sequence”**). The entire program memory latch content is now written to Flash program memory.

Note:	The program memory write latches are reset to the blank state (0x3FFF) at the completion of every write or erase operation. As a result, it is not necessary to load all the program memory write latches. Unloaded latches will remain in the blank state.

An example of the complete write sequence is shown in Example 13-4. The initial address is loaded into the NVMADRH:NVMADRL register pair; the data is loaded using indirect addressing.

FIGURE 13-4: BLOCK WRITES TO PROGRAM FLASH MEMORY (PFM) WITH 32 WRITE LATCHES

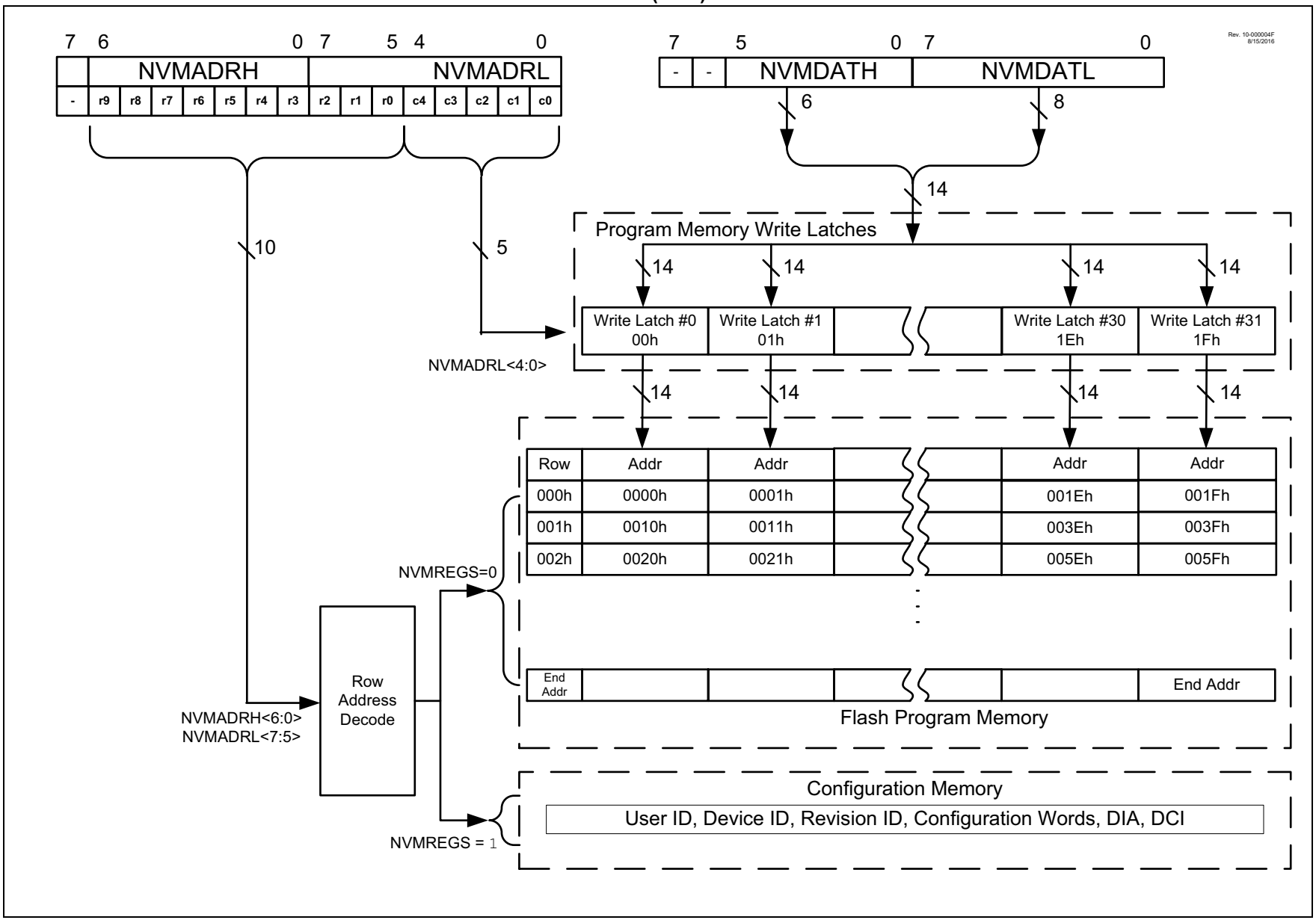

© 2017-2019 Microchip Technology Inc.

FIGURE 13-5: PROGRAM FLASH MEMORY (PFM) WRITE FLOWCHART

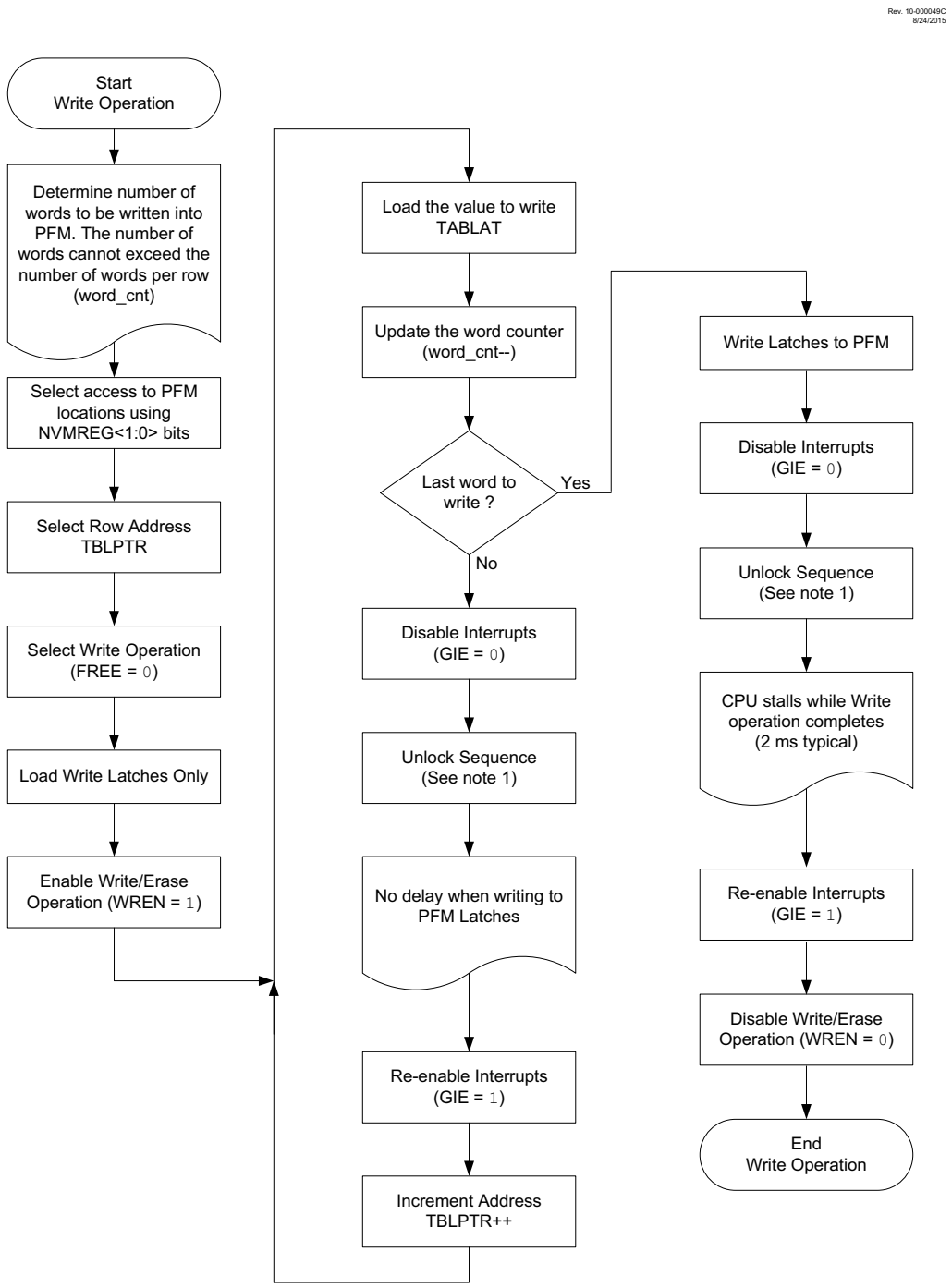

Note 1: See Figure 13-2.

EXAMPLE 13-4: WRITING TO PROGRAM FLASH MEMORY (PFM)

```
; This write routine assumes the following:
; 1. 32 bytes of data are loaded, starting at the address in DATA_ADDR
; 2. Each word of data to be written is made up of two adjacent bytes in DATA_ADDR,
;    stored in little endian format
; 3. A valid starting address (the least significant bits = 00000) is loaded in ADDRH:ADDRL
; 4. ADDRH and ADDRL are located in common RAM (locations 0x70 - 0x7F)
; 5. NVM interrupts are not taken into account

        BANKSEL       NVMADRH
        MOVF          ADDRH,W
        MOVWF         NVMADRH                 ; Load initial address
        MOVF          ADDRL,W
        MOVWF         NVMADRL
        MOVLW         LOW DATA_ADDR           ; Load initial data address
        MOVWF         FSR0L
        MOVLW         HIGH DATA_ADDR
        MOVWF         FSR0H
        BCF           NVMCON1,NVMREGS         ; Set Program Flash Memory as write location
        BSF           NVMCON1,WREN            ; Enable writes
        BSF           NVMCON1,LWLO            ; Load only write latches

LOOP
        MOVIW         FSR0++
        MOVWF         NVMDATL                 ; Load first data byte
        MOVIW         FSR0++
        MOVWF         NVMDATH                 ; Load second data byte

        MOVF          NVMADRL,W
        XORLW         0x1F                    ; Check if lower bits of address are 00000
        ANDLW         0x1F                    ; and if on last of 32 addresses
        BTFSC         STATUS,Z                ; Last of 32 words?
        GOTO          START_WRITE             ; If so, go write latches into memory

        CALL          UNLOCK_SEQ              ; If not, go load latch
        INCF          NVMADRL,F               ; Increment address
        GOTO          LOOP

START_WRITE
        BCF           NVMCON1,LWLO            ; Latch writes complete, now write memory
        CALL          UNLOCK_SEQ              ; Perform required unlock sequence
        BCF           NVMCON1,WREN            ; Disable writes

UNLOCK_SEQ
        MOVLW         55h
        BCF           INTCON,GIE              ; Disable interrupts
        MOVWF         NVMCON2                 ; Begin unlock sequence
        MOVLW         AAh
        MOVWF         NVMCON2
        BSF           NVMCON1,WR
        BSF           INTCON,GIE              ; Unlock sequence complete, re-enable interrupts
        return
```

13.4.6 MODIFYING FLASH PROGRAM MEMORY

When modifying existing data in a program memory row, and data within that row must be preserved, it must first be read and saved in a RAM image. Program memory is modified using the following steps:

1. Load the starting address of the row to be modified.
2. Read the existing data from the row into a RAM image.
3. Modify the RAM image to contain the new data to be written into program memory.
4. Load the starting address of the row to be rewritten.
5. Erase the program memory row.
6. Load the write latches with data from the RAM image.
7. Initiate a programming operation.

FIGURE 13-6: FLASH PROGRAM MEMORY MODIFY FLOWCHART

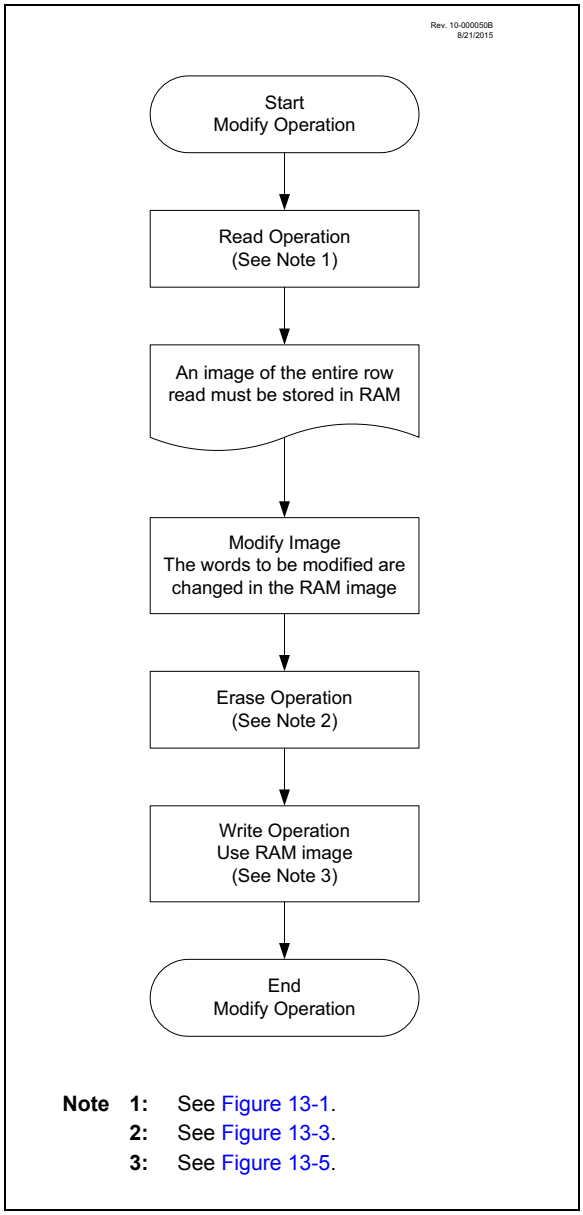

13.4.7 NVMREG ACCESS TO DEVICE INFORMATION AREA, DEVICE CONFIGURATION AREA, USER ID, DEVICE ID AND CONFIGURATION WORDS

Instead of accessing Program Flash Memory (PFM), the Device Information Area (DIA), Device Configuration Information (DCI), the User ID's, Device ID/Revision ID, EEPROM and Configuration Words can be accessed when NVMREGS = 1 in the NVMCON1 register. This is the region that would be pointed to by PC<15> = 1, but not all addresses are accessible. Different access may exist for reads and writes. Refer to Table 13-3.

When read access is initiated on an address outside the parameters listed in Table 13-3, the NVMDATH: NVMDATL register pair is cleared, reading back '0's.

TABLE 13-3: NVRM ACCESS TO DEVICE INFORMATION AREA, DEVICE CONFIGURATION AREA, USER ID, DEVICE ID AND CONFIGURATION WORDS (NVMREGS = 1)

Address	Function	Read Access	Write Access
8000h-8003h	User IDs	Yes	Yes
8005h-8006h	Device ID/Revision ID	Yes	No
8007h-800Bh	Configuration Words 1-5	Yes	No
8100h-82FFh	DIA and DCI	Yes	No
F000h-F0FFh	EEPROM	Yes	Yes

EXAMPLE 13-5: DEVICE ID ACCESS

```
; This write routine assumes the following:
; 1. A full row of data are loaded, starting at the address in DATA_ADDR
; 2. Each word of data to be written is made up of two adjacent bytes in DATA_ADDR,
; stored in little endian format
; 3. A valid starting address (the least significant bits = 00000) is loaded in ADDRH:ADDRL
; 4. ADDRH and ADDRL are located in common RAM (locations 0x70 - 0x7F)
; 5. NVM interrupts are not taken into account
BANKSEL NVMADRH
MOVF ADDRH,W
MOVWF NVMADRH               ; Load initial address
MOVF ADDRL,W
MOVWF NVMADRL
MOVLW LOW DATA_ADDR            ; Load initial data address
MOVWF FSR0L
MOVLW HIGH DATA_ADDR
MOVWF FSR0H
BCF NVMCON1,NVMREGS           ; Set PFM as write location
BSF NVMCON1,WREN               ; Enable writes
BSF NVMCON1,LWLO             ; Load only write latches
LOOP
MOVIW FSR0++
MOVWF NVMDATL             ; Load first data byte
MOVIW FSR0++
MOVWF NVMDATH               ; Load second data byte
CALL UNLOCK_SEQ             ; If not, go load latch
INCF NVMADRL,F              ; Increment address
MOVF NVMADRL,W
XORLW 0x1F                  ; Check if lower bits of address are 00000
ANDLW 0x1F                  ; and if on last of 32 addresses
BTFSC STATUS,Z             ; Last of 32 words?
GOTO START_WRITE             ; If so, go write latches into memory
GOTO LOOP
START_WRITE
BCF NVMCON1,LWLO             ; Latch writes complete, now write memory
CALL UNLOCK_SEQ              ; Perform required unlock sequence
BCF NVMCON1,LWLO             ; Disable writes
UNLOCK_SEQ
MOVLW 55h
BCF INTCON,GIE                ; Disable interrupts
MOVWF NVMCON2                 ; Begin unlock sequence
MOVLW AAh
MOVWF NVMCON2
BSF NVMCON1,WR
BSF INTCON,GIE                ; Unlock sequence complete, re-enable interrupts
```

13.4.8 WRITE VERIFY

It is considered good programming practice to verify that program memory writes agree with the intended value. Since program memory is stored as a full row then the stored program memory contents are compared with the intended data stored in RAM after the last write is complete.

FIGURE 13-7: FLASH PROGRAM MEMORY VERIFY FLOWCHART

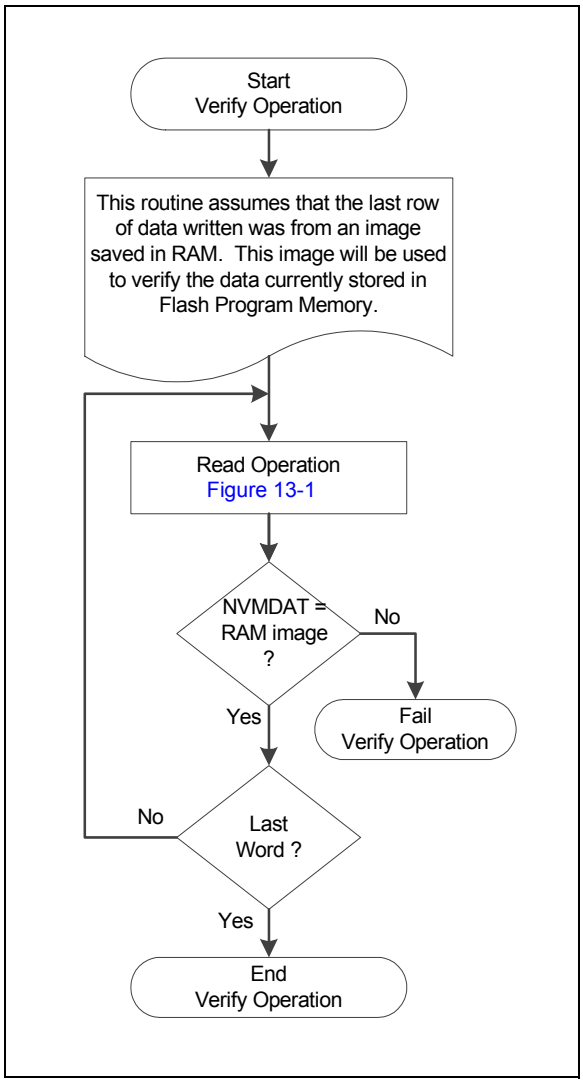

13.4.9 WRERR BIT

The WRERR bit can be used to determine if a write error occurred.

WRERR will be set if one of the following conditions occurs:

- If WR is set while the NVMADRH:NMVADRL points to a write-protected address
- A Reset occurs while a self-write operation was in progress
- An unlock sequence was interrupted

The WRERR bit is normally set by hardware, but can be set by the user for test purposes. Once set, WRERR must be cleared in software.

TABLE 13-4: ACTIONS FOR PFM WHEN WR = 1

Free	LWLO	Actions for PFM when WR = 1	Comments
1	x	Erase the 32-word row of NVMADRH:NVMADRL location. See **Section 13.4.4 "NVMREG Erase of PFM"**	• If WP is enabled, WR is cleared and WRERR is set • All 32 words are erased • NVMDATH:NVMDATL is ignored
0	1	Copy NVMDATH:NVMDATL to the write latch corresponding to NVMADR LSBs. See **Section 13.4.4 "NVMREG Erase of PFM"**	• Write protection is ignored • No memory access occurs
0	0	Write the write-latch data to PFM row. See **Section 13.4.4 "NVMREG Erase of PFM"**	• If WP is enabled, WR is cleared and WRERR is set • Write latches are reset to 3FFh • NVMDATH:NVMDATL is ignored

13.5 Register Definitions: Flash Program Memory Control

REGISTER 13-1: NVMDATL: NONVOLATILE MEMORY DATA LOW BYTE REGISTER

R/W-x/u	R/W-x/u	R/W-x/u	R/W-x/u	R/W-x/u	R/W-x/u	R/W-x/u	R/W-x/u
NVMDAT<7:0>							
bit 7							bit 0

Legend:		
R = Readable bit	W = Writable bit	U = Unimplemented bit, read as ‘0’
u = Bit is unchanged	x = Bit is unknown	-n/n = Value at POR and BOR/Value at all other Resets
‘1’ = Bit is set	‘0’ = Bit is cleared	

bit 7-0 **NVMDAT<7:0>**: Read/write value for Least Significant bits of program memory

REGISTER 13-2: NVMDATH: NONVOLATILE MEMORY DATA HIGH BYTE REGISTER

U-0	U-0	R/W-x/u	R/W-x/u	R/W-x/u	R/W-x/u	R/W-x/u	R/W-x/u
—	—	NVMDAT<13:8>					
bit 7							bit 0

Legend:		
R = Readable bit	W = Writable bit	U = Unimplemented bit, read as ‘0’
u = Bit is unchanged	x = Bit is unknown	-n/n = Value at POR and BOR/Value at all other Resets
‘1’ = Bit is set	‘0’ = Bit is cleared	

bit 7-6 **Unimplemented:** Read as ‘0’

bit 5-0 **NVMDAT<13:8>**: Read/write value for Most Significant bits of program memory

REGISTER 13-3: NVMADRL: NONVOLATILE MEMORY ADDRESS LOW BYTE REGISTER

R/W-0/0	R/W-0/0	R/W-0/0	R/W-0/0	R/W-0/0	R/W-0/0	R/W-0/0	R/W-0/0
NVMADR<7:0>							
bit 7							bit 0

Legend:		
R = Readable bit	W = Writable bit	U = Unimplemented bit, read as ‘0’
u = Bit is unchanged	x = Bit is unknown	-n/n = Value at POR and BOR/Value at all other Resets
‘1’ = Bit is set	‘0’ = Bit is cleared	

bit 7-0 **NVMADR<7:0>**: Specifies the Least Significant bits for program memory address

REGISTER 13-4: NVMADRH: NONVOLATILE MEMORY ADDRESS HIGH BYTE REGISTER

U-1	R/W-0/0	R/W-0/0	R/W-0/0	R/W-0/0	R/W-0/0	R/W-0/0	R/W-0/0
—(1)	NVMADR<14:8>						
bit 7							bit 0

Legend:		
R = Readable bit	W = Writable bit	U = Unimplemented bit, read as ‘0’
u = Bit is unchanged	x = Bit is unknown	-n/n = Value at POR and BOR/Value at all other Resets
‘1’ = Bit is set	‘0’ = Bit is cleared	

bit 7 **Unimplemented:** Read as ‘1’

bit 6-0 **NVMADR<14:8>**: Specifies the Most Significant bits for program memory address

Note 1: Bit is undefined while WR = 1

REGISTER 13-5: NVMCON1: NONVOLATILE MEMORY CONTROL 1 REGISTER

U-0	R/W-0/0	R/W-0/0	R/W/HC-0/0	R/W/HC-x/q	R/W-0/0	R/S/HC-0/0	R/S/HC-0/0
—	NVMREGS	LWLO	FREE	WRERR(1,2,3)	WREN	WR(4,5,6)	RD
bit 7							bit 0

Legend:		
R = Readable bit	W = Writable bit	U = Unimplemented bit, read as ‘0’
S = Bit can only be set	x = Bit is unknown	-n/n = Value at POR and BOR/Value at all other Resets
‘1’ = Bit is set	‘0’ = Bit is cleared	HC = Bit is cleared by hardware

bit 7 **Unimplemented:** Read as ‘0’

bit 6 **NVMREGS:** Configuration Select bit
1 = Access EEPROM, DIA, DCI, Configuration, User ID and Device ID Registers
0 = Access PFM

bit 5 **LWLO:** Load Write Latches Only bit
When FREE = 0:
1 = The next WR command updates the write latch for this word within the row; no memory operation is initiated.
0 = The next WR command writes data or erases
Otherwise: The bit is ignored

bit 4 **FREE:** PFM Erase Enable bit
When NVMREGS:NVMADR points to a PFM location:
1 = Performs an erase operation with the next WR command; the 32-word pseudo-row containing the indicated address is erased (to all 1s) to prepare for writing.
0 = All erase operations have completed normally

bit 3 **WRERR:** Program/Erase Error Flag bit(1,2,3)
This bit is normally set by hardware.
1 = A write operation was interrupted by a Reset, interrupted unlock sequence, or WR was written to one while NVMADR points to a write-protected address.
0 = The program or erase operation completed normally

bit 2 **WREN:** Program/Erase Enable bit
1 = Allows program/erase cycles
0 = Inhibits programming/erasing of program Flash

bit 1 **WR:** Write Control bit(4,5,6)
When NVMREG:NVMADR points to a PFM location:
1 = Initiates the operation indicated by Table 13-4
0 = NVM program/erase operation is complete and inactive.

bit 0 **RD:** Read Control bit(7)
1 = Initiates a read at address = NVMADR1, and loads data to NVMDAT Read takes one instruction cycle and the bit is cleared when the operation is complete. The bit can only be set (not cleared) in software.
0 = NVM read operation is complete and inactive

Note 1: Bit is undefined while WR = 1.
2: Bit must be cleared by software; hardware will not clear this bit.
3: Bit may be written to ‘1’ by software in order to implement test sequences.
4: This bit can only be set by following the unlock sequence of **Section 13.4.2 “NVM Unlock Sequence”**.
5: Operations are self-timed, and the WR bit is cleared by hardware when complete.
6: Once a write operation is initiated, setting this bit to zero will have no effect.
7: Reading from EEPROM loads only NVMDATL<7:0> (Register 13-1).

REGISTER 13-6: NVMCON2: NONVOLATILE MEMORY CONTROL 2 REGISTER

W-0/0	W-0/0	W-0/0	W-0/0	W-0/0	W-0/0	W-0/0	W-0/0
NVMCON2<7:0>							
bit 7							bit 0

Legend:		
R = Readable bit	W = Writable bit	U = Unimplemented bit, read as ‘0’
S = Bit can only be set	x = Bit is unknown	-n/n = Value at POR and BOR/Value at all other Resets
‘1’ = Bit is set	‘0’ = Bit is cleared	

bit 7-0 **NVMCON2<7:0>:** Flash Memory Unlock Pattern bits
To unlock writes, a 55h must be written first followed by an AAh before setting the WR bit of the NVMCON1 register. The value written to this register is used to unlock the writes.

TABLE 13-5: SUMMARY OF REGISTERS ASSOCIATED WITH NONVOLATILE MEMORY (NVM)

Name	Bit 7	Bit 6	Bit 5	Bit 4	Bit 3	Bit 2	Bit 1	Bit 0	Register on Page
INTCON	GIE	PEIE	—	—	—	—	—	INTEDG	164
PIE7	—	—	NVMIE	—	—	—	—	CWG1IE	172
PIR7	—	—	NVMIF	—	—	—	—	CWG1IF	181
NVMCON1	—	NVMREGS	LWLO	FREE	WRERR	WREN	WR	RD	217
NVMCON2	NVMCON2<7:0>								218
NVMADRL	NVMADR<7:0>								216
NVMADRH	—(1)	NVMADR<14:8>							216
NVMDATL	NVMDAT<7:0>								216
NVMDATH	—	—	NVMDAT<13:8>						216

Legend: — = unimplemented location, read as ‘0’. Shaded cells are not used by NVM.
Note 1: Unimplemented, read as ‘1’.

14.0 I/O PORTS

TABLE 14-1: PORT AVAILABILITY PER DEVICE

Device	PORTA	PORTB	PORTC	PORTD	PORTE	PORTF
PIC16(L)F19155/56	●	●	●	–	●	–
PIC16(L)F19175/76	●	●	●	●	●	–
PIC16(L)F19185/86	●	●	●	●	●	●

Each port has ten standard registers for its operation. These registers are:

- PORTx registers (reads the levels on the pins of the device)
- LATx registers (output latch)
- TRISx registers (data direction)
- ANSELx registers (analog select)
- WPUx registers (weak pull-up)
- INLVLx (input level control)
- SLRCONx registers (slew rate)
- ODCONx registers (open-drain)

Most port pins share functions with device peripherals, both analog and digital. In general, when a peripheral is enabled on a port pin, that pin cannot be used as a general purpose output; however, the pin can still be read.

The Data Latch (LATx registers) is useful for read-modify-write operations on the value that the I/O pins are driving.

A write operation to the LATx register has the same effect as a write to the corresponding PORTx register. A read of the LATx register reads of the values held in the I/O PORT latches, while a read of the PORTx register reads the actual I/O pin value.

Ports that support analog inputs have an associated ANSELx register. When an ANSEL bit is set, the digital input buffer associated with that bit is disabled.

Disabling the input buffer prevents analog signal levels on the pin between a logic high and low from causing excessive current in the logic input circuitry. A simplified model of a generic I/O port, without the interfaces to other peripherals, is shown in Figure 14-1.

FIGURE 14-1: GENERIC I/O PORT OPERATION

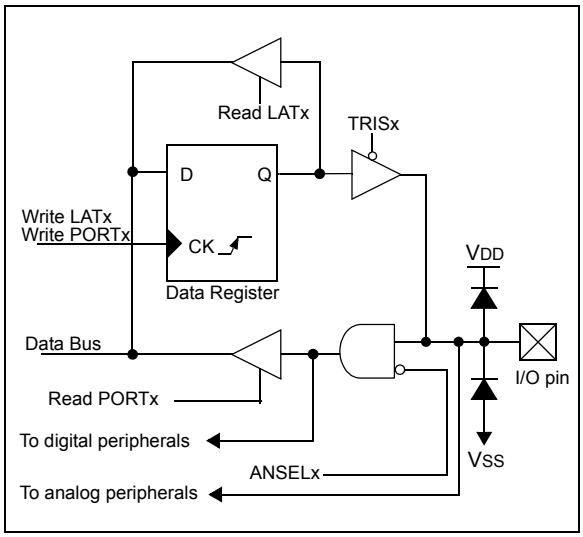

14.1 I/O Priorities

Each pin defaults to the PORT data latch after Reset. Other functions are selected with the peripheral pin select logic. See **Section 15.0 "Peripheral Pin Select (PPS) Module"** for more information.

Analog input functions, such as ADC and comparator inputs, are not shown in the peripheral pin select lists. The analog functions are always available regardless of ANSEL. The ANSEL bit disables the digital input functions, as shown in Figure 14-1. Digital output functions may continue to control the pin when it is in Analog mode.

Analog outputs, when enabled, take priority over the digital outputs and force the digital output driver to the high-impedance state.

14.2 PORTA Registers

14.2.1 DATA REGISTER

PORTA is an 8-bit wide, bidirectional port. The corresponding data direction register is TRISA (Register 14-2). Setting a TRISA bit (= 1) will make the corresponding PORTA pin an input (i.e., disable the output driver). Clearing a TRISA bit (= 0) will make the corresponding PORTA pin an output (i.e., enables output driver and puts the contents of the output latch on the selected pin). Example 14.2.8 shows how to initialize PORTA.

Reading the PORTA register (Register 14-1) reads the status of the pins, whereas writing to it will write to the PORT latch.

The PORT data latch LATA (Register 14-3) holds the output port data, and contains the latest value of a LATA or PORTA write.

EXAMPLE 14-1: INITIALIZING PORTA

```
; This code example illustrates
; initializing the PORTA register. The
; other ports are initialized in the same
; manner.

BANKSEL  PORTA        ;
CLRF     PORTA        ;Init PORTA
BANKSEL  LATA         ;Data Latch
CLRF     LATA         ;
BANKSEL  ANSELA       ;
CLRF     ANSELA       ;digital I/O
BANKSEL  TRISA        ;
MOVLW    B'00111000'  ;Set RA<5:3> as inputs
MOVWF    TRISA        ;and set RA<2:0> as
                      ;outputs
```

14.2.2 DIRECTION CONTROL

The TRISA register (Register 14-2) controls the PORTA pin output drivers, even when they are being used as analog inputs. The user should ensure the bits in the TRISA register are maintained set when using them as analog inputs. I/O pins configured as analog inputs always read ‘0’.

14.2.3 OPEN-DRAIN CONTROL

The ODCONA register (Register 14-6) controls the open-drain feature of the port. Open-drain operation is independently selected for each pin. When an ODCONA bit is set, the corresponding port output becomes an open-drain driver capable of sinking current only. When an ODCONA bit is cleared, the corresponding port output pin is the standard push-pull drive capable of sourcing and sinking current.

Note: It is not necessary to set open-drain control when using the pin for I^2C; the I^2C module controls the pin and makes the pin open-drain.

14.2.4 SLEW RATE CONTROL

The SLRCONA register (Register 14-7) controls the slew rate option for each port pin. Slew rate control is independently selectable for each port pin. When an SLRCONA bit is set, the corresponding port pin drive is slew rate limited. When an SLRCONA bit is cleared, The corresponding port pin drive slews at the maximum rate possible.

14.2.5 INPUT THRESHOLD CONTROL

The INLVLA register (Register 14-8) controls the input voltage threshold for each of the available PORTA input pins. A selection between the Schmitt Trigger CMOS or the TTL Compatible thresholds is available. The input threshold is important in determining the value of a read of the PORTA register and also the level at which an interrupt-on-change occurs, if that feature is enabled. See Table 39-4 for more information on threshold levels.

Note:	Changing the input threshold selection should be performed while all peripheral modules are disabled. Changing the threshold level during the time a module is active may inadvertently generate a transition associated with an input pin, regardless of the actual voltage level on that pin.

14.2.6 ANALOG CONTROL

The ANSELA register (Register 14-4) is used to configure the Input mode of an I/O pin to analog. Setting the appropriate ANSELA bit high will cause all digital reads on the pin to be read as '0' and allow analog functions on the pin to operate correctly.

The state of the ANSELA bits has no effect on digital output functions. A pin with its TRIS bit clear and its ANSEL bit set will still operate as a digital output, but the Input mode will be analog. This can cause unexpected behavior when executing read-modify-write instructions on the affected port.

Note:	The ANSELA bits default to the Analog mode after Reset. To use any pins as digital general purpose or peripheral inputs, the corresponding ANSEL bits must be initialized to '0' by user software.

14.2.7 WEAK PULL-UP CONTROL

The WPUA register (Register 14-5) controls the individual weak pull-ups for each PORT pin.

14.2.8 PORTA FUNCTIONS AND OUTPUT PRIORITIES

Each PORTA pin is multiplexed with other functions.

Each pin defaults to the PORT latch data after Reset. Other output functions are selected with the peripheral pin select logic or by enabling an analog output, such as the DAC. See **Section 15.0 "Peripheral Pin Select (PPS) Module"** for more information.

Analog input functions, such as ADC and comparator inputs are not shown in the peripheral pin select lists. Digital output functions may continue to control the pin when it is in Analog mode.

14.3 Register Definitions: PORTA

REGISTER 14-1: PORTA: PORTA REGISTER

R/W-x/u	R/W-x/u	R-x/u	R/W-x/u	R/W-x/u	R/W-x/u	R/W-x/u	R/W-x/u
RA7	RA6	RA5	RA4	RA3	RA2	RA1	RA0
bit 7							bit 0

Legend:		
R = Readable bit	W = Writable bit	U = Unimplemented bit, read as ‘0’
u = Bit is unchanged	x = Bit is unknown	-n/n = Value at POR and BOR/Value at all other Resets
‘1’ = Bit is set	‘0’ = Bit is cleared	

bit 7-0 **RA<7:0>**: PORTA I/O Value bits[(1)]
`1` = Port pin is $\geq V_{IH}$
`0` = Port pin is $\leq V_{IL}$

Note 1: Writes to PORTA are actually written to corresponding LATA register. Reads from PORTA register is return of actual I/O pin values.

REGISTER 14-2: TRISA: PORTA TRI-STATE REGISTER

R/W-1/1	R/W-1/1	U-1	R/W-1/1	R/W-1/1	R/W-1/1	R/W-1/1	R/W-1/1
TRISA7	TRISA6	—	TRISA4	TRISA3	TRISA2	TRISA1	TRISA0
bit 7							bit 0

Legend:		
R = Readable bit	W = Writable bit	U = Unimplemented bit, read as ‘0’
u = Bit is unchanged	x = Bit is unknown	-n/n = Value at POR and BOR/Value at all other Resets
‘1’ = Bit is set	‘0’ = Bit is cleared	

bit 7-6 **TRISA<7:6>:** PORTA Tri-State Control bit
`1` = PORTA pin configured as an input (tri-stated)
`0` = PORTA pin configured as an output

bit 5 **Unimplemented:** Read as ‘1’

bit 4-0 **TRISA<4:0>:** PORTA Tri-State Control bit
`1` = PORTA pin configured as an input (tri-stated)
`0` = PORTA pin configured as an output

REGISTER 14-3: LATA: PORTA DATA LATCH REGISTER

R/W-x/u	R/W-x/u	U-0	R/W-x/u	R/W-x/u	R/W-x/u	R/W-x/u	R/W-x/u
LATA7	LATA6	—	LATA4	LATA3	LATA2	LATA1	LATA0
bit 7							bit 0

Legend:		
R = Readable bit	W = Writable bit	U = Unimplemented bit, read as ‘0’
u = Bit is unchanged	x = Bit is unknown	-n/n = Value at POR and BOR/Value at all other Resets
‘1’ = Bit is set	‘0’ = Bit is cleared	

bit 7-6 **LATA<7:6>**: RA<7:6> Output Latch Value bits(1)

bit 5 **Unimplemented:** Read as ‘0’

bit 4-0 **LATA<4:0>**: RA<4:0> Output Latch Value bits(1)

Note 1: Writes to PORTA are actually written to corresponding LATA register. Reads from PORTA register is return of actual I/O pin values.

REGISTER 14-4: ANSELA: PORTA ANALOG SELECT REGISTER

R/W-1/1	R/W-1/1	U-0	R/W-1/1	R/W-1/1	R/W-1/1	R/W-1/1	R/W-1/1
ANSA7	ANSA6	—	ANSA4	ANSA3	ANSA2	ANSA1	ANSA0
bit 7							bit 0

Legend:		
R = Readable bit	W = Writable bit	U = Unimplemented bit, read as ‘0’
u = Bit is unchanged	x = Bit is unknown	-n/n = Value at POR and BOR/Value at all other Resets
‘1’ = Bit is set	‘0’ = Bit is cleared	

bit 7-6 **ANSA<7:6>**: Analog Select between Analog or Digital Function on pins RA<7:6>, respectively
1 = Analog input. Pin is assigned as analog input(1). Digital input buffer disabled.
0 = Digital I/O. Pin is assigned to port or digital special function.

bit 5 **Unimplemented:** Read as ‘0’

bit 4-0 **ANSA<4:0>**: Analog Select between Analog or Digital Function on pins RA<4:0>, respectively
1 = Analog input. Pin is assigned as analog input(1). Digital input buffer disabled.
0 = Digital I/O. Pin is assigned to port or digital special function.

Note 1: When setting a pin to an analog input, the corresponding TRIS bit must be set to Input mode in order to allow external control of the voltage on the pin.

REGISTER 14-5: WPUA: WEAK PULL-UP PORTA REGISTER

R/W-0/0	R/W-0/0	U-0	R/W-0/0	R/W-0/0	R/W-0/0	R/W-0/0	R/W-0/0
WPUA7	WPUA6	WPUA5	WPUA4	WPUA3	WPUA2	WPUA1	WPUA0
bit 7							bit 0

Legend:		
R = Readable bit	W = Writable bit	U = Unimplemented bit, read as ‘0’
u = Bit is unchanged	x = Bit is unknown	-n/n = Value at POR and BOR/Value at all other Resets
‘1’ = Bit is set	‘0’ = Bit is cleared	

bit 7-0 **WPUA<7:0>**: Weak Pull-up Register bits(1)
1 = Pull-up enabled
0 = Pull-up disabled

Note 1: The weak pull-up device is automatically disabled if the pin is configured as an output.

REGISTER 14-6: ODCONA: PORTA OPEN-DRAIN CONTROL REGISTER

R/W-0/0	R/W-0/0	U-0	R/W-0/0	R/W-0/0	R/W-0/0	R/W-0/0	R/W-0/0
ODCA7	ODCA6	—	ODCA4	ODCA3	ODCA2	ODCA1	ODCA0
bit 7							bit 0

Legend:		
R = Readable bit	W = Writable bit	U = Unimplemented bit, read as ‘0’
u = Bit is unchanged	x = Bit is unknown	-n/n = Value at POR and BOR/Value at all other Resets
‘1’ = Bit is set	‘0’ = Bit is cleared	

bit 7-6 **ODCA<7:6>:** PORTA Open-Drain Enable bits
For RA<7:6> pins, respectively
1 = Port pin operates as open-drain drive (sink current only)
0 = Port pin operates as standard push-pull drive (source and sink current)

bit 5 **Unimplemented:** Read as ‘0’

bit 4-0 **ODCA<4:0>:** PORTA Open-Drain Enable bits
For RA<4:0> pins, respectively
1 = Port pin operates as open-drain drive (sink current only)
0 = Port pin operates as standard push-pull drive (source and sink current)

REGISTER 14-7: SLRCONA: PORTA SLEW RATE CONTROL REGISTER

R/W-1/1	R/W-1/1	U-0	R/W-1/1	R/W-1/1	R/W-1/1	R/W-1/1	R/W-1/1
SLRA7	SLRA6	—	SLRA4	SLRA3	SLRA2	SLRA1	SLRA0
bit 7							bit 0

Legend:		
R = Readable bit	W = Writable bit	U = Unimplemented bit, read as ‘0’
u = Bit is unchanged	x = Bit is unknown	-n/n = Value at POR and BOR/Value at all other Resets
‘1’ = Bit is set	‘0’ = Bit is cleared	

bit 7-6 **SLRA<7:6>:** PORTA Slew Rate Enable bits
For RA<7:6> pins, respectively
`1` = Port pin slew rate is limited
`0` = Port pin slews at maximum rate

bit 5 **Unimplemented:** Read as ‘0’.

bit 4-0 **SLRA<4:0>:** PORTA Slew Rate Enable bits
For RA<4:0> pins, respectively
`1` = Port pin slew rate is limited
`0` = Port pin slews at maximum rate

REGISTER 14-8: INLVLA: PORTA INPUT LEVEL CONTROL REGISTER

R/W-1/1	R/W-1/1	R/W-1/1	R/W-1/1	R/W-1/1	R/W-1/1	R/W-1/1	R/W-1/1
INLVLA7	INLVLA6	INLVLA5	INLVLA4	INLVLA3	INLVLA2	INLVLA1	INLVLA0
bit 7							bit 0

Legend:		
R = Readable bit	W = Writable bit	U = Unimplemented bit, read as ‘0’
u = Bit is unchanged	x = Bit is unknown	-n/n = Value at POR and BOR/Value at all other Resets
‘1’ = Bit is set	‘0’ = Bit is cleared	

bit 7-0 **INLVLA<7:0>:** PORTA Input Level Select bits
For RA<7:0> pins, respectively
`1` = ST input used for PORT reads and interrupt-on-change
`0` = TTL input used for PORT reads and interrupt-on-change

TABLE 14-2: SUMMARY OF REGISTERS ASSOCIATED WITH PORTA

Name	Bit 7	Bit 6	Bit 5	Bit 4	Bit 3	Bit 2	Bit 1	Bit 0	Register on Page
PORTA	RA7	RA6	RA5	RA4	RA3	RA2	RA1	RA0	222
TRISA	TRISA7	TRISA6	—(1)	TRISA4	TRISA3	TRISA2	TRISA1	TRISA0	222
LATA	LATA7	LATA6	—	LATA4	LATA3	LATA2	LATA1	LATA0	223
ANSELA	ANSA7	ANSA6	—	ANSA4	ANSA3	ANSA2	ANSA1	ANSA0	223
WPUA	WPUA7	WPUA6	WPUA5	WPUA4	WPUA3	WPUA2	WPUA1	WPUA0	224
ODCONA	ODCA7	ODCA6	—	ODCA4	ODCA3	ODCA2	ODCA1	ODCA0	224
SLRCONA	SLRA7	SLRA6	—	SLRA4	SLRA3	SLRA2	SLRA1	SLRA0	225
INLVLA	INLVLA7	INLVLA6	INLVLA5	INLVLA4	INLVLA3	INLVLA2	INLVLA1	INLVLA0	225

Legend: x = unknown, u = unchanged, – = unimplemented locations read as '0'. Shaded cells are not used by PORTA.

Note 1: Unimplemented, read as '1'.

14.4 PORTB Registers

14.4.1 DATA REGISTER

PORTB is an 8-bit wide, bidirectional port. The corresponding data direction register is TRISB (Register 14-10). Setting a TRISB bit (= 1) will make the corresponding PORTB pin an input (i.e., disable the output driver). Clearing a TRISB bit (= 0) will make the corresponding PORTB pin an output (i.e., enables output driver and puts the contents of the output latch on the selected pin). **Section 14.2.8 "PORTA Functions and Output Priorities"** shows how to initialize PORTB.

Reading the PORTB register (Register 14-9) reads the status of the pins, whereas writing to it will write to the PORT latch.

The PORT data latch LATB (Register 14-11) holds the output port data, and contains the latest value of a LATB or PORTB write.

EXAMPLE 14-2: INITIALIZING PORTB

```
; This code example illustrates
; initializing the PORTB register. The
; other ports are initialized in the same
; manner.

BANKSEL  PORTB        ;
CLRF     PORTB        ;Init PORTB
BANKSEL  LATB         ;Data Latch
CLRF     LATB         ;
BANKSEL  ANSELB       ;
CLRF     ANSELB       ;digital I/O
BANKSEL  TRISB        ;
MOVLW    B'00111000'  ;Set RB<5:3> as inputs
MOVWF    TRISB        ;and set RB<2:0> as
                      ;outputs
```

14.4.2 DIRECTION CONTROL

The TRISB register (Register 14-10) controls the PORTB pin output drivers, even when they are being used as analog inputs. The user should ensure the bits in the TRISB register are maintained set when using them as analog inputs. I/O pins configured as analog inputs always read '0'.

14.4.3 OPEN-DRAIN CONTROL

The ODCONB register (Register 14-14) controls the open-drain feature of the port. Open-drain operation is independently selected for each pin. When an ODCONB bit is set, the corresponding port output becomes an open-drain driver capable of sinking current only. When an ODCONB bit is cleared, the corresponding port output pin is the standard push-pull drive capable of sourcing and sinking current.

Note: It is not necessary to set open-drain control when using the pin for I^2C; the I^2C module controls the pin and makes the pin open-drain.

14.4.4 SLEW RATE CONTROL

The SLRCONB register (Register 14-15) controls the slew rate option for each port pin. Slew rate control is independently selectable for each port pin. When an SLRCONB bit is set, the corresponding port pin drive is slew rate limited. When an SLRCONB bit is cleared, The corresponding port pin drive slews at the maximum rate possible.

14.4.5 HIGH CURRENT DRIVE CONTROL

The output drivers on RB1 are capable of sourcing and sinking up to 100 mA. This extra drive capacity can be enabled and disabled with the control bits in the HIDRVB register (Register 14-17).

14.4.6 INPUT THRESHOLD CONTROL

The INLVLB register (Register 14-8) controls the input voltage threshold for each of the available PORTB input pins. A selection between the Schmitt Trigger CMOS or the TTL Compatible thresholds is available. The input threshold is important in determining the value of a read of the PORTB register and also the level at which an interrupt-on-change occurs, if that feature is enabled. See Table 39-4 for more information on threshold levels.

Note: Changing the input threshold selection should be performed while all peripheral modules are disabled. Changing the threshold level during the time a module is active may inadvertently generate a transition associated with an input pin, regardless of the actual voltage level on that pin.

14.4.7 ANALOG CONTROL

The ANSELB register (Register 14-12) is used to configure the Input mode of an I/O pin to analog. Setting the appropriate ANSELA bit high will cause all digital reads on the pin to be read as '0' and allow analog functions on the pin to operate correctly.

The state of the ANSELB bits has no effect on digital output functions. A pin with its TRIS bit clear and its ANSEL bit set will still operate as a digital output, but the Input mode will be analog. This can cause unexpected behavior when executing read-modify-write instructions on the affected port.

Note:	The ANSELB bits default to the Analog mode after Reset. To use any pins as digital general purpose or peripheral inputs, the corresponding ANSEL bits must be initialized to '0' by user software.

14.4.8 WEAK PULL-UP CONTROL

The WPUB register (Register 14-5) controls the individual weak pull-ups for each PORT pin.

14.4.9 PORTB FUNCTIONS AND OUTPUT PRIORITIES

Each PORTB pin is multiplexed with other functions.

Each pin defaults to the PORT latch data after Reset. Other output functions are selected with the peripheral pin select logic or by enabling an analog output, such as the DAC. See **Section 15.0 "Peripheral Pin Select (PPS) Module"** for more information.

Analog input functions, such as ADC and comparator inputs are not shown in the peripheral pin select lists. Digital output functions may continue to control the pin when it is in Analog mode.

14.5 Register Definitions: PORTB

REGISTER 14-9: PORTB: PORTB REGISTER

R/W-x/u	R/W-x/u	R/W-x/u	R/W-x/u	R/W-x/u	R/W-x/u	R/W-x/u	R/W-x/u
RB7	RB6	RB5	RB4	RB3	RB2	RB1	RB0
bit 7							bit 0

Legend:		
R = Readable bit	W = Writable bit	U = Unimplemented bit, read as ‘0’
u = Bit is unchanged	x = Bit is unknown	-n/n = Value at POR and BOR/Value at all other Resets
‘1’ = Bit is set	‘0’ = Bit is cleared	

bit 7-0 **RB<7:0>**: PORTB I/O Value bits(1)
1 = Port pin is ≥ V_{IH}
0 = Port pin is ≤ V_{IL}

Note 1: Writes to PORTB are actually written to corresponding LATB register. Reads from PORTB register is return of actual I/O pin values.

REGISTER 14-10: TRISB: PORTB TRI-STATE REGISTER

R/W-1/1	R/W-1/1	R/W-1/1	R/W-1/1	R/W-1/1	R/W-1/1	R/W-1/1	R/W-1/1
TRISB7	TRISB6	TRISB5	TRISB4	TRISB3	TRISB2	TRISB1	TRISB0
bit 7							bit 0

Legend:		
R = Readable bit	W = Writable bit	U = Unimplemented bit, read as ‘0’
u = Bit is unchanged	x = Bit is unknown	-n/n = Value at POR and BOR/Value at all other Resets
‘1’ = Bit is set	‘0’ = Bit is cleared	

bit 7-0 **TRISB<7:0>:** PORTB Tri-State Control bit
1 = PORTB pin configured as an input (tri-stated)
0 = PORTB pin configured as an output

REGISTER 14-11: LATB: PORTB DATA LATCH REGISTER

R/W-x/u	R/W-x/u	R/W-x/u	R/W-x/u	R/W-x/u	R/W-x/u	R/W-x/u	R/W-x/u
LATB7	LATB6	LATB5	LATB4	LATB3	LATB2	LATB1	LATB0
bit 7							bit 0

Legend:		
R = Readable bit	W = Writable bit	U = Unimplemented bit, read as ‘0’
u = Bit is unchanged	x = Bit is unknown	-n/n = Value at POR and BOR/Value at all other Resets
‘1’ = Bit is set	‘0’ = Bit is cleared	

bit 7-0 **LATB<7:0>**: RB<7:0> Output Latch Value bits(1)

Note 1: Writes to PORTB are actually written to corresponding LATB register. Reads from PORTB register is return of actual I/O pin values.

REGISTER 14-12: ANSELB: PORTB ANALOG SELECT REGISTER

R/W-1/1	R/W-1/1	R/W-1/1	R/W-1/1	R/W-1/1	R/W-1/1	R/W-1/1	R/W-1/1
ANSB7	ANSB6	ANSB5	ANSB4	ANSB3	ANSB2	ANSB1	ANSB0
bit 7							bit 0

Legend:		
R = Readable bit	W = Writable bit	U = Unimplemented bit, read as ‘0’
u = Bit is unchanged	x = Bit is unknown	-n/n = Value at POR and BOR/Value at all other Resets
‘1’ = Bit is set	‘0’ = Bit is cleared	

bit 7-0 **ANSB<7:0>**: Analog Select between Analog or Digital Function on pins RB<7:0>, respectively
1 = Analog input. Pin is assigned as analog input(1). Digital input buffer disabled.
0 = Digital I/O. Pin is assigned to port or digital special function.

Note 1: When setting a pin to an analog input, the corresponding TRIS bit must be set to Input mode in order to allow external control of the voltage on the pin.

REGISTER 14-13: WPUB: WEAK PULL-UP PORTB REGISTER

R/W-0/0	R/W-0/0	R/W-0/0	R/W-0/0	R/W-0/0	R/W-0/0	R/W-0/0	R/W-0/0
WPUB7	WPUB6	WPUB5	WPUB4	WPUB3	WPUB2	WPUB1	WPUB0
bit 7							bit 0

Legend:		
R = Readable bit	W = Writable bit	U = Unimplemented bit, read as ‘0’
u = Bit is unchanged	x = Bit is unknown	-n/n = Value at POR and BOR/Value at all other Resets
‘1’ = Bit is set	‘0’ = Bit is cleared	

bit 7-0 **WPUB<7:0>**: Weak Pull-up Register bits(1)
1 = Pull-up enabled
0 = Pull-up disabled

Note 1: The weak pull-up device is automatically disabled if the pin is configured as an output.

REGISTER 14-14: ODCONB: PORTB OPEN-DRAIN CONTROL REGISTER

R/W-0/0	R/W-0/0	R/W-0/0	R/W-0/0	R/W-0/0	R/W-0/0	R/W-0/0	R/W-0/0
ODCB7	ODCB6	ODCB5	ODCB4	ODCB3	ODCB2	ODCB1	ODCB0
bit 7							bit 0

Legend:		
R = Readable bit	W = Writable bit	U = Unimplemented bit, read as ‘0’
u = Bit is unchanged	x = Bit is unknown	-n/n = Value at POR and BOR/Value at all other Resets
‘1’ = Bit is set	‘0’ = Bit is cleared	

bit 7-0 **ODCB<7:0>:** PORTB Open-Drain Enable bits
For RB<7:0> pins, respectively
1 = Port pin operates as open-drain drive (sink current only)
0 = Port pin operates as standard push-pull drive (source and sink current)

REGISTER 14-15: SLRCONB: PORTB SLEW RATE CONTROL REGISTER

R/W-1/1	R/W-1/1	R/W-1/1	R/W-1/1	R/W-1/1	R/W-1/1	R/W-1/1	R/W-1/1
SLRB7	SLRB6	SLRB5	SLRB4	SLRB3	SLRB2	SLRB1	SLRB0
bit 7							bit 0

Legend:		
R = Readable bit	W = Writable bit	U = Unimplemented bit, read as ‘0’
u = Bit is unchanged	x = Bit is unknown	-n/n = Value at POR and BOR/Value at all other Resets
‘1’ = Bit is set	‘0’ = Bit is cleared	

bit 7-0 **SLRB<7:0>:** PORTB Slew Rate Enable bits
For RB<7:0> pins, respectively
1 = Port pin slew rate is limited
0 = Port pin slews at maximum rate

REGISTER 14-16: INLVLB: PORTB INPUT LEVEL CONTROL REGISTER

R/W-1/1	R/W-1/1	R/W-1/1	R/W-1/1	R/W-1/1	R/W-1/1	R/W-1/1	R/W-1/1
INLVLB7	INLVLB6	INLVLB5	INLVLB4	INLVLB3	INLVLB2	INLVLB1	INLVLB0
bit 7							bit 0

Legend:		
R = Readable bit	W = Writable bit	U = Unimplemented bit, read as ‘0’
u = Bit is unchanged	x = Bit is unknown	-n/n = Value at POR and BOR/Value at all other Resets
‘1’ = Bit is set	‘0’ = Bit is cleared	

bit 7-0 **INLVLB<7:0>:** PORTB Input Level Select bits
For RB<7:0> pins, respectively
1 = ST input used for PORT reads and interrupt-on-change
0 = TTL input used for PORT reads and interrupt-on-change

REGISTER 14-17: HIDRVB: PORTB HIGH DRIVE CONTROL REGISTER

U-0	U-0	U-0	U-0	U-0	U-0	R/W-0/0	U-0
—	—	—	—	—	—	HIDB1	—
bit 7							bit 0

Legend:		
R = Readable bit	W = Writable bit	U = Unimplemented bit, read as ‘0’
u = Bit is unchanged	x = Bit is unknown	-n/n = Value at POR and BOR/Value at all other Resets
‘1’ = Bit is set	‘0’ = Bit is cleared	

bit 7-2 **Unimplemented:** Read as ‘0’.

bit 1 **HIDB1:** PORTB High Drive Enable bit
For RB1 pin
1 = High current source and sink enabled
0 = Standard current source and sink

bit 0 **Unimplemented:** Read as ‘0’.

TABLE 14-3: SUMMARY OF REGISTERS ASSOCIATED WITH PORTB

Name	Bit 7	Bit 6	Bit 5	Bit 4	Bit 3	Bit 2	Bit 1	Bit 0	Register on Page
PORTB	RB7	RB6	RB5	RB4	RB3	RB2	RB1	RB0	229
TRISB	TRISB7	TRISB6	TRISB5	TRISB4	TRISB3	TRISB2	TRISB1	TRISB0	229
LATB	LATB7	LATB6	LATB5	LATB4	LATB3	LATB2	LATB1	LATB0	230
ANSELB	ANSB7	ANSB6	ANSB5	ANSB4	ANSB3	ANSB2	ANSB1	ANSB0	230
WPUB	WPUB7	WPUB6	WPUB5	WPUB4	WPUB3	WPUB2	WPUB1	WPUB0	231
ODCONB	ODCB7	ODCB6	ODCB5	ODCB4	ODCB3	ODCB2	ODCB1	ODCB0	231
SLRCONB	SLRB7	SLRB6	SLRB5	SLRB4	SLRB3	SLRB2	SLRB1	SLRB0	232
INLVLB	INLVLB7	INLVLB6	INLVLB5	INLVLB4	INLVLB3	INLVLB2	INLVLB1	INLVLB0	232
HIDRVB	—	—	—	—	—	—	HIDB1	—	232

Legend: x = unknown, u = unchanged, – = unimplemented locations read as '0'. Shaded cells are not used by PORTB.

14.6 PORTC Registers

14.6.1 DATA REGISTER

PORTC is an 8-bit wide bidirectional port. The corresponding data direction register is TRISC (Register 14-19). Setting a TRISC bit (= 1) will make the corresponding PORTC pin an input (i.e., put the corresponding output driver in a High-Impedance mode). Clearing a TRISC bit (= 0) will make the corresponding PORTC pin an output (i.e., enable the output driver and put the contents of the output latch on the selected pin). **Section 14.2.8 "PORTA Functions and Output Priorities"** shows how to initialize an I/O port.

Reading the PORTC register (Register 14-18) reads the status of the pins, whereas writing to it will write to the PORT latch.

The PORT data latch LATC (Register 14-20) holds the output port data, and contains the latest value of a LATC or PORTC write.

14.6.2 DIRECTION CONTROL

The TRISC register (Register 14-19) controls the PORTC pin output drivers, even when they are being used as analog inputs. The user should ensure the bits in the TRISC register are maintained set when using them as analog inputs. I/O pins configured as analog inputs always read '0'.

14.6.3 INPUT THRESHOLD CONTROL

The INLVLC register (Register 14-24) controls the input voltage threshold for each of the available PORTC input pins. A selection between the Schmitt Trigger CMOS or the TTL Compatible thresholds is available. The input threshold is important in determining the value of a read of the PORTC register and also the level at which an interrupt-on-change occurs, if that feature is enabled. See Table 39-4 for more information on threshold levels.

Note:	Changing the input threshold selection should be performed while all peripheral modules are disabled. Changing the threshold level during the time a module is active may inadvertently generate a transition associated with an input pin, regardless of the actual voltage level on that pin.

14.6.4 OPEN-DRAIN CONTROL

The ODCONC register (Register 14-22) controls the open-drain feature of the port. Open-drain operation is independently selected for each pin. When an ODCONC bit is set, the corresponding port output becomes an open-drain driver capable of sinking current only. When an ODCONC bit is cleared, the corresponding port output pin is the standard push-pull drive capable of sourcing and sinking current.

Note:	It is not necessary to set open-drain control when using the pin for I^2C; the I^2C module controls the pin and makes the pin open-drain.

14.6.5 SLEW RATE CONTROL

The SLRCONC register (Register 14-23) controls the slew rate option for each port pin. Slew rate control is independently selectable for each port pin. When an SLRCONC bit is set, the corresponding port pin drive is slew rate limited. When an SLRCONC bit is cleared, The corresponding port pin drive slews at the maximum rate possible.

14.6.6 WEAK PULL-UP CONTROL

The WPUC register (Register 14-21) controls the individual weak pull-ups for each port pin.

14.6.7 PORTC FUNCTIONS AND OUTPUT PRIORITIES

Each pin defaults to the PORT latch data after Reset. Other output functions are selected with the peripheral pin select logic. See **Section 15.0 "Peripheral Pin Select (PPS) Module"** for more information.

Analog input functions, such as ADC and comparator inputs, are not shown in the peripheral pin select lists. Digital output functions may continue to control the pin when it is in Analog mode.

14.7 Register Definitions: PORTC

REGISTER 14-18: PORTC: PORTC REGISTER

R/W-x/u	R/W-x/u	U-0	R/W-x/u	R/W-x/u	R/W-x/u	R/W-x/u	R/W-x/u
RC7	RC6	—	RC4	RC3	RC2	RC1	RC0
bit 7							bit 0

Legend:		
R = Readable bit	W = Writable bit	U = Unimplemented bit, read as ‘0’
u = Bit is unchanged	x = Bit is unknown	-n/n = Value at POR and BOR/Value at all other Resets
‘1’ = Bit is set	‘0’ = Bit is cleared	

bit 7-6 **RC<7:6>**: PORTC General Purpose I/O Pin bits(1)
1 = Port pin is ≥ VIH
0 = Port pin is ≤ VIL

bit 5 **Unimplemented:** Read as ‘0’.

bit 4-0 **RC<4:0>**: PORTC General Purpose I/O Pin bits(1)
1 = Port pin is ≥ VIH
0 = Port pin is ≤ VIL

Note 1: Writes to PORTC are actually written to corresponding LATC register. Reads from PORTC register is return of actual I/O pin values.

REGISTER 14-19: TRISC: PORTC TRI-STATE REGISTER

R/W-1/1	R/W-1/1	U-0	R/W-1/1	R/W-1/1	R/W-1/1	R/W-1/1	R/W-1/1
TRISC7	TRISC6	—	TRISC4	TRISC3	TRISC2	TRISC1	TRISC0
bit 7							bit 0

Legend:		
R = Readable bit	W = Writable bit	U = Unimplemented bit, read as ‘0’
u = Bit is unchanged	x = Bit is unknown	-n/n = Value at POR and BOR/Value at all other Resets
‘1’ = Bit is set	‘0’ = Bit is cleared	

bit 7-6 **TRISC<7:6>:** PORTC Tri-State Control bits
1 = PORTC pin configured as an input (tri-stated)
0 = PORTC pin configured as an output

bit 5 **Unimplemented:** Read as ‘0’.

bit 4-0 **TRISC<4:0>:** PORTC Tri-State Control bits
1 = PORTC pin configured as an input (tri-stated)
0 = PORTC pin configured as an output

REGISTER 14-20: LATC: PORTC DATA LATCH REGISTER

R/W-x/u	R/W-x/u	U-0	R/W-x/u	R/W-x/u	R/W-x/u	R/W-x/u	R/W-x/u
LATC7	LATC6	—	LATC4	LATC3	LATC2	LATC1	LATC0
bit 7							bit 0

Legend:		
R = Readable bit	W = Writable bit	U = Unimplemented bit, read as ‘0’
u = Bit is unchanged	x = Bit is unknown	-n/n = Value at POR and BOR/Value at all other Resets
‘1’ = Bit is set	‘0’ = Bit is cleared	

bit 7-6 **LATC<7:6>**: PORTC Output Latch Value bits

bit 5 **Unimplemented:** Read as ‘0’.

bit 4-0 **LATC<4:0>**: PORTC Output Latch Value bits

REGISTER 14-21: WPUC: WEAK PULL-UP PORTC REGISTER

R/W-0/0	R/W-0/0	U-0	R/W-0/0	R/W-0/0	R/W-0/0	R/W-0/0	R/W-0/0
WPUC7	WPUC6	—	WPUC4	WPUC3	WPUC2	WPUC1	WPUC0
bit 7							bit 0

Legend:		
R = Readable bit	W = Writable bit	U = Unimplemented bit, read as ‘0’
u = Bit is unchanged	x = Bit is unknown	-n/n = Value at POR and BOR/Value at all other Resets
‘1’ = Bit is set	‘0’ = Bit is cleared	

bit 7-6 **WPUC<7:6>**: Weak Pull-up Register bits(1)
1 = Pull-up enabled
0 = Pull-up disabled

bit 5 **Unimplemented:** Read as ‘0’.

bit 4-0 **WPUC<4:0>**: Weak Pull-up Register bits(1)
1 = Pull-up enabled
0 = Pull-up disabled

Note 1: The weak pull-up device is automatically disabled if the pin is configured as an output.

REGISTER 14-22: ODCONC: PORTC OPEN-DRAIN CONTROL REGISTER

R/W-0/0	R/W-0/0	U-0	R/W-0/0	R/W-0/0	R/W-0/0	R/W-0/0	R/W-0/0
ODCC7	ODCC6	—	ODCC4	ODCC3	ODCC2	ODCC1	ODCC0
bit 7							bit 0

Legend:		
R = Readable bit	W = Writable bit	U = Unimplemented bit, read as ‘0’
u = Bit is unchanged	x = Bit is unknown	-n/n = Value at POR and BOR/Value at all other Resets
‘1’ = Bit is set	‘0’ = Bit is cleared	

bit 7-6 **ODCC<7:6>:** PORTC Open-Drain Enable bits
For RC<7:6> pins, respectively
1 = Port pin operates as open-drain drive (sink current only)
0 = Port pin operates as standard push-pull drive (source and sink current)

bit 5 **Unimplemented:** Read as ‘0’.

bit 4-0 **ODCC<4:0>:** PORTC Open-Drain Enable bits
For RC<4:0> pins, respectively
1 = Port pin operates as open-drain drive (sink current only)
0 = Port pin operates as standard push-pull drive (source and sink current)

REGISTER 14-23: SLRCONC: PORTC SLEW RATE CONTROL REGISTER

R/W-1/1	R/W-1/1	U-0	R/W-1/1	R/W-1/1	R/W-1/1	R/W-1/1	R/W-1/1
SLRC7	SLRC6	—	SLRC4	SLRC3	SLRC2	SLRC1	SLRC0
bit 7							bit 0

Legend:		
R = Readable bit	W = Writable bit	U = Unimplemented bit, read as ‘0’
u = Bit is unchanged	x = Bit is unknown	-n/n = Value at POR and BOR/Value at all other Resets
‘1’ = Bit is set	‘0’ = Bit is cleared	

bit 7-6 **SLRC<7:6>:** PORTC Slew Rate Enable bits
For RC<7:6> pins, respectively
1 = Port pin slew rate is limited
0 = Port pin slews at maximum rate

bit 5 **Unimplemented:** Read as ‘0’.

bit 4-0 **SLRC<4:0>:** PORTC Slew Rate Enable bits
For RC<4:0> pins, respectively
1 = Port pin slew rate is limited
0 = Port pin slews at maximum rate

REGISTER 14-24: INLVLC: PORTC INPUT LEVEL CONTROL REGISTER

R/W-1/1	R/W-1/1	U-0	R/W-1/1	R/W-1/1	R/W-1/1	R/W-1/1	R/W-1/1
INLVLC7	INLVLC6	—	INLVLC4	INLVLC3	INLVLC2	INLVLC1	INLVLC0
bit 7							bit 0

Legend:		
R = Readable bit	W = Writable bit	U = Unimplemented bit, read as ‘0’
u = Bit is unchanged	x = Bit is unknown	-n/n = Value at POR and BOR/Value at all other Resets
‘1’ = Bit is set	‘0’ = Bit is cleared	

bit 7-6 **INLVLC<7:6>:** PORTC Input Level Select bits
For RC<7:6> pins, respectively
1 = ST input used for PORT reads and interrupt-on-change
0 = TTL input used for PORT reads and interrupt-on-change

bit 5 **Unimplemented:** Read as ‘0’.

bit 4-0 **INLVLC<4:0>:** PORTC Input Level Select bits
For RC<4:0> pins, respectively
1 = ST input used for PORT reads and interrupt-on-change
0 = TTL input used for PORT reads and interrupt-on-change

TABLE 14-4: SUMMARY OF REGISTERS ASSOCIATED WITH PORTC

Name	Bit 7	Bit 6	Bit 5	Bit 4	Bit 3	Bit 2	Bit 1	Bit 0	Register on Page
PORTC	RC7	RC6	—	RC4	RC3	RC2	RC1	RC0	235
TRISC	TRISC7	TRISC6	—	TRISC4	TRISC3	TRISC2	TRISC1	TRISC0	235
LATC	LATC7	LATC6	—	LATC4	LATC3	LATC2	LATC1	LATC0	236
WPUC	WPUC7	WPUC6	—	WPUC4	WPUC3	WPUC2	WPUC1	WPUC0	236
ODCONC	ODCC7	ODCC6	—	ODCC4	ODCC3	ODCC2	ODCC1	ODCC0	237
SLRCONC	SLRC7	SLRC6	—	SLRC4	SLRC3	SLRC2	SLRC1	SLRC0	237
INLVLC	INLVLC7	INLVLC6	—	INLVLC4	INLVLC3	INLVLC2	INLVLC1	INLVLC0	238

Legend: – = unimplemented locations read as ‘0’. Shaded cells are not used by PORTC.

14.8 PORTD Registers

Note: PORTD functionality is present on PIC16(L)F19175/76/85/86 only.

14.8.1 DATA REGISTER

PORTD is an 8-bit wide, bidirectional port. The corresponding data direction register is TRISD (Register 14-26). Setting a TRISD bit (= 1) will make the corresponding PORTD pin an input (i.e., disable the output driver). Clearing a TRISD bit (= 0) will make the corresponding PORTD pin an output (i.e., enables output driver and puts the contents of the output latch on the selected pin). Example 14-3 shows how to initialize PORTD.

Reading the PORTD register (Register 14-25) reads the status of the pins, whereas writing to it will write to the PORT latch.

The PORT data latch LATD (Register 14-27) holds the output port data, and contains the latest value of a LATD or PORTD write.

EXAMPLE 14-3: INITIALIZING PORTD

```
; This code example illustrates
; initializing the PORTD register. The
; other ports are initialized in the same
; manner.

BANKSEL  PORTD        ;
CLRF     PORTD        ;Init PORTD
BANKSEL  LATD         ;Data Latch
CLRF     LATD         ;
BANKSEL  ANSELD       ;
CLRF     ANSELD       ;digital I/O
BANKSEL  TRISD        ;
MOVLW    B'00111000'  ;Set RD<5:3> as inputs
MOVWF    TRISD        ;and set RD<2:0> as
                      ;outputs
```

14.8.2 DIRECTION CONTROL

The TRISD register (Register 14-26) controls the PORTD pin output drivers, even when they are being used as analog inputs. The user should ensure the bits in the TRISD register are maintained set when using them as analog inputs. I/O pins configured as analog inputs always read '0'.

14.8.3 OPEN-DRAIN CONTROL

The ODCOND register (Register 14-30) controls the open-drain feature of the port. Open-drain operation is independently selected for each pin. When an ODCOND bit is set, the corresponding port output becomes an open-drain driver capable of sinking current only. When an ODCOND bit is cleared, the corresponding port output pin is the standard push-pull drive capable of sourcing and sinking current.

Note: It is not necessary to set open-drain control when using the pin for I^2C; the I^2C module controls the pin and makes the pin open-drain.

14.8.4 SLEW RATE CONTROL

The SLRCOND register (Register 14-31) controls the slew rate option for each port pin. Slew rate control is independently selectable for each port pin. When an SLRCOND bit is set, the corresponding port pin drive is slew rate limited. When an SLRCOND bit is cleared, The corresponding port pin drive slews at the maximum rate possible.

14.8.5 INPUT THRESHOLD CONTROL

The INLVLD register (Register 14-32) controls the input voltage threshold for each of the available PORTD input pins. A selection between the Schmitt Trigger CMOS or the TTL Compatible thresholds is available. The input threshold is important in determining the value of a read of the PORTD register and also the level at which an interrupt-on-change occurs, if that feature is enabled. See Table 39-4 for more information on threshold levels.

Note: Changing the input threshold selection should be performed while all peripheral modules are disabled. Changing the threshold level during the time a module is active may inadvertently generate a transition associated with an input pin, regardless of the actual voltage level on that pin.

14.8.6 ANALOG CONTROL

The ANSELD register (Register 14-28) is used to configure the Input mode of an I/O pin to analog. Setting the appropriate ANSELD bit high will cause all digital reads on the pin to be read as '0' and allow analog functions on the pin to operate correctly.

The state of the ANSELD bits has no effect on digital output functions. A pin with its TRIS bit clear and its ANSEL bit set will still operate as a digital output, but the Input mode will be analog. This can cause unexpected behavior when executing read-modify-write instructions on the affected port.

Note:	The ANSELD bits default to the Analog mode after Reset. To use any pins as digital general purpose or peripheral inputs, the corresponding ANSEL bits must be initialized to '0' by user software.

14.8.7 WEAK PULL-UP CONTROL

The WPUD register (Register 14-29) controls the individual weak pull-ups for each PORT pin.

14.8.8 PORTD FUNCTIONS AND OUTPUT PRIORITIES

Each PORTD pin is multiplexed with other functions.

Each pin defaults to the PORT latch data after Reset. Other output functions are selected with the peripheral pin select logic or by enabling an analog output, such as the DAC. See **Section 15.0 "Peripheral Pin Select (PPS) Module"** for more information.

Analog input functions, such as ADC and comparator inputs are not shown in the peripheral pin select lists. Digital output functions may continue to control the pin when it is in Analog mode.

14.9 Register Definitions: PORTD

REGISTER 14-25: PORTD: PORTD REGISTER(2)

R/W-x/u	R/W-x/u	R/W-x/u	R/W-x/u	R/W-x/u	R/W-x/u	R/W-x/u	R/W-x/u
RD7	RD6	RD5	RD4	RD3	RD2	RD1	RD0
bit 7							bit 0

Legend:		
R = Readable bit	W = Writable bit	U = Unimplemented bit, read as ‘0’
u = Bit is unchanged	x = Bit is unknown	-n/n = Value at POR and BOR/Value at all other Resets
‘1’ = Bit is set	‘0’ = Bit is cleared	

bit 7-0 **RD<7:0>**: PORTD I/O Value bits(1)
1 = Port pin is ≥ V_{IH}
0 = Port pin is ≤ V_{IL}

Note 1: Writes to PORTD are actually written to corresponding LATD register. Reads from PORTD register is return of actual I/O pin values.
2: Present only on PIC16(L)F19175/76/85/86 devices.

REGISTER 14-26: TRISD: PORTD TRI-STATE REGISTER(1)

R/W-1/1	R/W-1/1	R/W-1/1	R/W-1/1	R/W-1/1	R/W-1/1	R/W-1/1	R/W-1/1
TRISD7	TRISD6	TRISD5	TRISD4	TRISD3	TRISD2	TRISD1	TRISD0
bit 7							bit 0

Legend:		
R = Readable bit	W = Writable bit	U = Unimplemented bit, read as ‘0’
u = Bit is unchanged	x = Bit is unknown	-n/n = Value at POR and BOR/Value at all other Resets
‘1’ = Bit is set	‘0’ = Bit is cleared	

bit 7-0 **TRISD<7:0>:** PORTD Tri-State Control bit
1 = PORTD pin configured as an input (tri-stated)
0 = PORTD pin configured as an output

Note 1: Present only on PIC16(L)F19175/76/85/86 devices.

REGISTER 14-27: LATD: PORTD DATA LATCH REGISTER(2)

R/W-x/u	R/W-x/u	R/W-x/u	R/W-x/u	R/W-x/u	R/W-x/u	R/W-x/u	R/W-x/u
LATD7	LATD6	LATD5	LATD4	LATD3	LATD2	LATD1	LATD0
bit 7							bit 0

Legend:		
R = Readable bit	W = Writable bit	U = Unimplemented bit, read as ‘0’
u = Bit is unchanged	x = Bit is unknown	-n/n = Value at POR and BOR/Value at all other Resets
‘1’ = Bit is set	‘0’ = Bit is cleared	

bit 7-0 **LATD<7:0>**: RD<7:0> Output Latch Value bits(1)

Note 1: Writes to PORTD are actually written to corresponding LATD register. Reads from PORTD register is return of actual I/O pin values.

2: Present only on PIC16(L)F19175/76/85/86 devices.

REGISTER 14-28: ANSELD: PORTD ANALOG SELECT REGISTER(2)

R/W-1/1	R/W-1/1	R/W-1/1	R/W-1/1	R/W-1/1	R/W-1/1	R/W-1/1	R/W-1/1
ANSD7	ANSD6	ANSD5	ANSD4	ANSD3	ANSD2	ANSD1	ANSD0
bit 7							bit 0

Legend:		
R = Readable bit	W = Writable bit	U = Unimplemented bit, read as ‘0’
u = Bit is unchanged	x = Bit is unknown	-n/n = Value at POR and BOR/Value at all other Resets
‘1’ = Bit is set	‘0’ = Bit is cleared	

bit 7-0 **ANSD<7:0>**: Analog Select between Analog or Digital Function on pins RD<7:0>, respectively
1 = Analog input. Pin is assigned as analog input(1). Digital input buffer disabled.
0 = Digital I/O. Pin is assigned to port or digital special function.

Note 1: When setting a pin to an analog input, the corresponding TRIS bit must be set to Input mode in order to allow external control of the voltage on the pin.

2: Present only on PIC16(L)F19175/76/85/86 devices.

REGISTER 14-29: WPUD: WEAK PULL-UP PORTD REGISTER(2)

R/W-0/0	R/W-0/0	R/W-0/0	R/W-0/0	R/W-0/0	R/W-0/0	R/W-0/0	R/W-0/0
WPUD7	WPUD6	WPUD5	WPUD4	WPUD3	WPUD2	WPUD1	WPUD0
bit 7							bit 0

Legend:		
R = Readable bit	W = Writable bit	U = Unimplemented bit, read as ‘0’
u = Bit is unchanged	x = Bit is unknown	-n/n = Value at POR and BOR/Value at all other Resets
‘1’ = Bit is set	‘0’ = Bit is cleared	

bit 7-0 **WPUD<7:0>**: Weak Pull-up Register bits(1)
1 = Pull-up enabled
0 = Pull-up disabled

Note 1: The weak pull-up device is automatically disabled if the pin is configured as an output.
2: Present only on PIC16(L)F19175/76/85/86 devices.

REGISTER 14-30: ODCOND: PORTD OPEN-DRAIN CONTROL REGISTER(1)

R/W-0/0	R/W-0/0	R/W-0/0	R/W-0/0	R/W-0/0	R/W-0/0	R/W-0/0	R/W-0/0
ODCD7	ODCD6	ODCD5	ODCD4	ODCD3	ODCD2	ODCD1	ODCD0
bit 7							bit 0

Legend:		
R = Readable bit	W = Writable bit	U = Unimplemented bit, read as ‘0’
u = Bit is unchanged	x = Bit is unknown	-n/n = Value at POR and BOR/Value at all other Resets
‘1’ = Bit is set	‘0’ = Bit is cleared	

bit 7-0 **ODCD<7:0>:** PORTD Open-Drain Enable bits
For RD<7:0> pins, respectively
1 = Port pin operates as open-drain drive (sink current only)
0 = Port pin operates as standard push-pull drive (source and sink current)

Note 1: Present only on PIC16(L)F19175/76/85/86 devices.

REGISTER 14-31: SLRCOND: PORTD SLEW RATE CONTROL REGISTER(1)

R/W-1/1	R/W-1/1	R/W-1/1	R/W-1/1	R/W-1/1	R/W-1/1	R/W-1/1	R/W-1/1
SLRD7	SLRD6	SLRD5	SLRD4	SLRD3	SLRD2	SLRD1	SLRD0
bit 7							bit 0

Legend:		
R = Readable bit	W = Writable bit	U = Unimplemented bit, read as ‘0’
u = Bit is unchanged	x = Bit is unknown	-n/n = Value at POR and BOR/Value at all other Resets
‘1’ = Bit is set	‘0’ = Bit is cleared	

bit 7-0 **SLRD<7:0>:** PORTD Slew Rate Enable bits
For RD<7:0> pins, respectively
1 = Port pin slew rate is limited
0 = Port pin slews at maximum rate

Note 1: Present only on PIC16(L)F19175/76/85/86 devices.

REGISTER 14-32: INLVLD: PORTD INPUT LEVEL CONTROL REGISTER(1)

R/W-1/1	R/W-1/1	R/W-1/1	R/W-1/1	R/W-1/1	R/W-1/1	R/W-1/1	R/W-1/1
INLVLD7	INLVLD6	INLVLD5	INLVLD4	INLVLD3	INLVLD2	INLVLD1	INLVLD0
bit 7							bit 0

Legend:		
R = Readable bit	W = Writable bit	U = Unimplemented bit, read as ‘0’
u = Bit is unchanged	x = Bit is unknown	-n/n = Value at POR and BOR/Value at all other Resets
‘1’ = Bit is set	‘0’ = Bit is cleared	

bit 7-0 **INLVLD<7:0>:** PORTD Input Level Select bits
For RD<7:0> pins, respectively
1 = ST input used for PORT reads and interrupt-on-change
0 = TTL input used for PORT reads and interrupt-on-change

Note 1: Present only on PIC16(L)F19175/76/85/86 devices.

TABLE 14-5: SUMMARY OF REGISTERS ASSOCIATED WITH PORTD(2)

Name	Bit 7	Bit 6	Bit 5	Bit 4	Bit 3	Bit 2	Bit 1	Bit 0	Register on Page
PORTD	RD7	RD6	RD5	RD4	RD3	RD2	RD1	RD0	241
TRISD	TRISD7	TRISD6	TRISD5	TRISD4	TRISD3	TRISD2	TRISD1	TRISD0	241
LATD	LATD7	LATD6	LATD5	LATD4	LATD3	LATD2	LATD1	LATD0	242
ANSELD	ANSD7	ANSD6	ANSD5	ANSD4	ANSD3	ANSD2	ANSD1	ANSD0	242
WPUD	WPUD7	WPUD6	WPUD5	WPUD4	WPUD3	WPUD2	WPUD1	WPUD0	243
ODCOND	ODCD7	ODCD6	ODCD5	ODCD4	ODCD3	ODCD2	ODCD1	ODCD0	243
SLRCOND	SLRD7	SLRD6	SLRD5	SLRD4	SLRD3	SLRD2	SLRD1	SLRD0	244
INLVLD	INLVLD7	INLVLD6	INLVLD5	INLVLD4	INLVLD3	INLVLD2	INLVLD1	INLVLD0	244

Legend: x = unknown, u = unchanged, – = unimplemented locations read as '0'. Shaded cells are not used by PORTD.

Note 1: Unimplemented, read as '1'.

2: Present only on PIC16(L)F19175/76/85/86 devices.

14.10 PORTE Registers

14.10.1 DATA REGISTER

PORTE is an 8-bit wide, bidirectional port. The corresponding data direction register is TRISE (Register 14-34). Setting a TRISE bit (= 1) will make the corresponding PORTE pin an input (i.e., disable the output driver). Clearing a TRISE bit (= 0) will make the corresponding PORTE pin an output (i.e., enables output driver and puts the contents of the output latch on the selected pin). Example 14-4 shows how to initialize PORTE.

Reading the PORTE register (Register 14-33) reads the status of the pins, whereas writing to it will write to the PORT latch.

The PORT data latch LATE (Register 14-35) holds the output port data, and contains the latest value of a LATE or PORTE write.

EXAMPLE 14-4: INITIALIZING PORTE

```
; This code example illustrates
; initializing the PORTE register. The
; other ports are initialized in the same
; manner.

BANKSEL  PORTE        ;
CLRF     PORTE        ;Init PORTE
BANKSEL  LATE         ;Data Latch
CLRF     LATE         ;
BANKSEL  ANSELE       ;
CLRF     ANSELE       ;digital I/O
BANKSEL  TRISE        ;
MOVLW    B'00111000'  ;Set RE<5:3> as inputs
MOVWF    TRISE        ;and set RE<2:0> as
                      ;outputs
```

14.10.2 DIRECTION CONTROL

The TRISE register (Register 14-34) controls the PORTE pin output drivers, even when they are being used as analog inputs. The user should ensure the bits in the TRISE register are maintained set when using them as analog inputs. I/O pins configured as analog inputs always read '0'.

14.10.3 OPEN-DRAIN CONTROL

The ODCONE register (Register 14-38) controls the open-drain feature of the port. Open-drain operation is independently selected for each pin. When an ODCONE bit is set, the corresponding port output becomes an open-drain driver capable of sinking current only. When an ODCONE bit is cleared, the corresponding port output pin is the standard push-pull drive capable of sourcing and sinking current.

Note: It is not necessary to set open-drain control when using the pin for I^2C; the I^2C module controls the pin and makes the pin open-drain.

14.10.4 SLEW RATE CONTROL

The SLRCONE register (Register 14-39) controls the slew rate option for each port pin. Slew rate control is independently selectable for each port pin. When an SLRCONE bit is set, the corresponding port pin drive is slew rate limited. When an SLRCONE bit is cleared, The corresponding port pin drive slews at the maximum rate possible.

14.10.5 INPUT THRESHOLD CONTROL

The INLVLE register (Register 14-40) controls the input voltage threshold for each of the available PORTE input pins. A selection between the Schmitt Trigger CMOS or the TTL Compatible thresholds is available. The input threshold is important in determining the value of a read of the PORTE register and also the level at which an interrupt-on-change occurs, if that feature is enabled. See Table 39-4 for more information on threshold levels.

Note: Changing the input threshold selection should be performed while all peripheral modules are disabled. Changing the threshold level during the time a module is active may inadvertently generate a transition associated with an input pin, regardless of the actual voltage level on that pin.

14.10.6 ANALOG CONTROL

The ANSELE register (Register 14-36) is used to configure the Input mode of an I/O pin to analog. Setting the appropriate ANSELE bit high will cause all digital reads on the pin to be read as '0' and allow analog functions on the pin to operate correctly.

The state of the ANSELE bits has no effect on digital output functions. A pin with its TRIS bit clear and its ANSEL bit set will still operate as a digital output, but the Input mode will be analog. This can cause unexpected behavior when executing read-modify-write instructions on the affected port.

Note:	The ANSELE bits default to the Analog mode after Reset. To use any pins as digital general purpose or peripheral inputs, the corresponding ANSEL bits must be initialized to '0' by user software.

14.10.7 WEAK PULL-UP CONTROL

The WPUE register (Register 14-37) controls the individual weak pull-ups for each PORT pin.

14.10.8 PORTE FUNCTIONS AND OUTPUT PRIORITIES

Each PORTE pin is multiplexed with other functions.

Each pin defaults to the PORT latch data after Reset. Other output functions are selected with the peripheral pin select logic or by enabling an analog output, such as the DAC. See **Section 15.0 "Peripheral Pin Select (PPS) Module"** for more information.

Analog input functions, such as ADC and comparator inputs are not shown in the peripheral pin select lists. Digital output functions may continue to control the pin when it is in Analog mode.

14.11 Register Definitions: PORTE

REGISTER 14-33: PORTE: PORTE REGISTER

U-0	U-0	U-0	U-0	R/W-x/u	R/W-x/u	R/W-x/u	R/W-x/u
—	—	—	—	RE3	RE2(2)	RE1(2)	RE0(2)
bit 7							bit 0

Legend:		
R = Readable bit	W = Writable bit	U = Unimplemented bit, read as ‘0’
u = Bit is unchanged	x = Bit is unknown	-n/n = Value at POR and BOR/Value at all other Resets
‘1’ = Bit is set	‘0’ = Bit is cleared	

bit 7-4 **Unimplemented:** Read as ‘0’

bit 3 **RE3**: PORTE I/O Value bits
1 = Port pin is ≥ VIH
0 = Port pin is ≤ VIL

bit 2-0 **RE<2:0>**: PORTE I/O Value bits(2)
1 = Port pin is ≥ VIH
0 = Port pin is ≤ VIL

Note 1: Writes to PORTE are actually written to corresponding LATE register. Reads from PORTE register is return of actual I/O pin values.
2: Present only on PIC16(L)F19175/76/85/86 devices.

REGISTER 14-34: TRISE: PORTE TRI-STATE REGISTER

U-0	U-0	U-0	U-0	U-1	R/W-1/1	R/W-1/1	R/W-1/1
—	—	—	—	—	TRISE2(1)	TRISE1(1)	TRISE0(1)
bit 7							bit 0

Legend:		
R = Readable bit	W = Writable bit	U = Unimplemented bit, read as ‘0’
u = Bit is unchanged	x = Bit is unknown	-n/n = Value at POR and BOR/Value at all other Resets
‘1’ = Bit is set	‘0’ = Bit is cleared	

bit 7-4 **Unimplemented:** Read as ‘0’

bit 3 **Unimplemented:** Read as ‘1’

bit 1-0 **TRISE<2:0>:** PORTE Tri-State Control bit(1)
1 = PORTE pin configured as an input (tri-stated)
0 = PORTE pin configured as an output

Note 1: Present only on PIC16(L)F19175/76/85/86 devices.

REGISTER 14-35: LATE: PORTE DATA LATCH REGISTER(2)

U-0	U-0	U-0	U-0	U-0	R/W-x/u	R/W-x/u	R/W-x/u
—	—	—	—	—	LATE2	LATE1	LATE0
bit 7							bit 0

Legend:		
R = Readable bit	W = Writable bit	U = Unimplemented bit, read as ‘0’
u = Bit is unchanged	x = Bit is unknown	-n/n = Value at POR and BOR/Value at all other Resets
‘1’ = Bit is set	‘0’ = Bit is cleared	

bit 7-3 **Unimplemented:** Read as ‘0’

bit 2-0 **LATE<2:0>**: RE<2:0> Output Latch Value bits(1)

Note 1: Writes to PORTE are actually written to corresponding LATE register. Reads from PORTE register is return of actual I/O pin values.

2: Present only on PIC16(L)F19175/76/85/86 devices.

REGISTER 14-36: ANSELE: PORTE ANALOG SELECT REGISTER(2)

U-0	U-0	U-0	U-0	U-0	R/W-1/1	R/W-1/1	R/W-1/1
—	—	—	—	—	ANSE2	ANSE1	ANSE0
bit 7							bit 0

Legend:		
R = Readable bit	W = Writable bit	U = Unimplemented bit, read as ‘0’
u = Bit is unchanged	x = Bit is unknown	-n/n = Value at POR and BOR/Value at all other Resets
‘1’ = Bit is set	‘0’ = Bit is cleared	

bit 7-3 **ANSE<7:3>**: **Unimplemented:** Read as ‘0’

bit 2-0 **ANSE<2:0>**: Analog Select between Analog or Digital Function on pins RE<1:0>, respectively
1 = Analog input. Pin is assigned as analog input(1). Digital input buffer disabled.
0 = Digital I/O. Pin is assigned to port or digital special function.

Note 1: When setting a pin to an analog input, the corresponding TRIS bit must be set to Input mode in order to allow external control of the voltage on the pin.

2: Present only on PIC16(L)F19175/76/85/86 devices.

REGISTER 14-37: WPUE: WEAK PULL-UP PORTE REGISTER

U-0	U-0	U-0	U-0	R/W-0/0	R/W-0/0	R/W-0/0	R/W-0/0
—	—	—	—	WPUE3	WPUE2(2)	WPUE1(2)	WPUE0(2)
bit 7							bit 0

Legend:		
R = Readable bit	W = Writable bit	U = Unimplemented bit, read as ‘0’
u = Bit is unchanged	x = Bit is unknown	-n/n = Value at POR and BOR/Value at all other Resets
‘1’ = Bit is set	‘0’ = Bit is cleared	

bit 7-4 **Unimplemented:** Read as ‘0’

bit 3-0 **WPUE<3:0>**: Weak Pull-up Register bits(1)
1 = Pull-up enabled
0 = Pull-up disabled

Note 1: The weak pull-up device is automatically disabled if the pin is configured as an output.
2: Present only on PIC16(L)F19175/76/85/86 devices.

REGISTER 14-38: ODCONE: PORTE OPEN-DRAIN CONTROL REGISTER(1)

U-0	U-0	U-0	U-0	U-0	U-0	R/W-0/0	R/W-0/0
—	—	—	—	—	—	ODCE1	ODCE0
bit 7							bit 0

Legend:		
R = Readable bit	W = Writable bit	U = Unimplemented bit, read as ‘0’
u = Bit is unchanged	x = Bit is unknown	-n/n = Value at POR and BOR/Value at all other Resets
‘1’ = Bit is set	‘0’ = Bit is cleared	

bit 7-2 **Unimplemented:** Read as ‘0’

bit 1-0 **ODCE<1:0>:** PORTE Open-Drain Enable bits
For RE<1:0> pins, respectively
1 = Port pin operates as open-drain drive (sink current only)
0 = Port pin operates as standard push-pull drive (source and sink current)

Note 1: Present only on PIC16(L)F19175/76/85/86 devices.

REGISTER 14-39: SLRCONE: PORTE SLEW RATE CONTROL REGISTER(1)

U-0	U-0	U-0	U-0	U-0	R/W-1/1	R/W-1/1	R/W-1/1
—	—	—	—	—	SLRE2	SLRE1	SLRE0
bit 7							bit 0

Legend:		
R = Readable bit	W = Writable bit	U = Unimplemented bit, read as ‘0’
u = Bit is unchanged	x = Bit is unknown	-n/n = Value at POR and BOR/Value at all other Resets
‘1’ = Bit is set	‘0’ = Bit is cleared	

bit 7-3 **Unimplemented:** Read as ‘0’

bit 2-0 **SLRE<2:0>:** PORTE Slew Rate Enable bits
For RE<2:0> pins, respectively
1 = Port pin slew rate is limited
0 = Port pin slews at maximum rate

Note 1: Present only on PIC16(L)F19175/76/85/86 devices.

REGISTER 14-40: INLVLE: PORTE INPUT LEVEL CONTROL REGISTER

U-0	U-0	U-0	U-0	R/W-1/1	R/W-1/1	R/W-1/1	R/W-1/1
—	—	—	—	INLVLE3	INLVLE2(1)	INLVLE1(1)	INLVLE0(1)
bit 7							bit 0

Legend:		
R = Readable bit	W = Writable bit	U = Unimplemented bit, read as ‘0’
u = Bit is unchanged	x = Bit is unknown	-n/n = Value at POR and BOR/Value at all other Resets
‘1’ = Bit is set	‘0’ = Bit is cleared	

bit 7-4 **Unimplemented:** Read as ‘0’

bit 3-0 **INLVLE<3:0>:** PORTE Input Level Select bits
For RE<3:0> pins, respectively
1 = ST input used for PORT reads and interrupt-on-change
0 = TTL input used for PORT reads and interrupt-on-change

Note 1: Present only on PIC16(L)F19175/76/85/86 devices.

TABLE 14-6: SUMMARY OF REGISTERS ASSOCIATED WITH PORTE

Name	Bit 7	Bit 6	Bit 5	Bit 4	Bit 3	Bit 2	Bit 1	Bit 0	Register on Page
PORTE	—	—	—	—	RE3	RE2(1)	RE1(1)	RE0(1)	248
TRISE	—	—	—	—	—	TRISE2(1)	TRISE1(1)	TRISE0(1)	248
LATE(1)	—	—	—	—	—	LATE2	LATE1	LATE0	249
ANSELE(1)	—	—	—	—	—	ANSE2	ANSE1	ANSE0	249
WPUE	—	—	—	—	WPUE3	WPUE2(1)	WPUE1(1)	WPUE0(1)	250
ODCONE(1)	—	—	—	—	—	—	ODCE1	ODCE0	250
SLRCONE(1)	—	—	—	—	—	SLRE2	SLRE1	SLRE0	251
INLVLE	—	—	—	—	INLVLE3	INLVLE2(1)	INLVLE1(1)	INLVLE0(1)	251

Legend: x = unknown, u = unchanged, – = unimplemented locations read as '0'. Shaded cells are not used by PORTE.

Note 1: Present only on PIC16(L)F19175/76/85/86 devices.

14.12 PORTF Registers

Note: PORTF functionality is present on PIC16(L)F19185/86 only.

14.12.1 DATA REGISTER

PORTF is an 8-bit wide, bidirectional port. The corresponding data direction register is TRISF (Register 14-42). Setting a TRISF bit (= 1) will make the corresponding PORTF pin an input (i.e., disable the output driver). Clearing a TRISD bit (= 0) will make the corresponding PORTF pin an output (i.e., enables output driver and puts the contents of the output latch on the selected pin). Example 14.2.8 shows how to initialize PORTF.

Reading the PORTF register (Register 14-41) reads the status of the pins, whereas writing to it will write to the PORT latch.

The PORT data latch LATF (Example 14-5) holds the output port data, and contains the latest value of a LATF or PORTF write.

EXAMPLE 14-5: INITIALIZING PORTF

```
; This code example illustrates
; initializing the PORTF register. The
; other ports are initialized in the same
; manner.

BANKSEL  PORTF        ;
CLRF     PORTF        ;Init PORTF
BANKSEL  LATF         ;Data Latch
CLRF     LATF         ;
BANKSEL  ANSELF       ;
CLRF     ANSELF       ;digital I/O
BANKSEL  TRISF        ;
MOVLW    B'00111000'  ;Set RF<5:3> as inputs
MOVWF    TRISF        ;and set RF<2:0> as
                      ;outputs
```

14.12.2 DIRECTION CONTROL

The TRISF register (Register 14-42) controls the PORTF pin output drivers, even when they are being used as analog inputs. The user should ensure the bits in the TRISF register are maintained set when using them as analog inputs. I/O pins configured as analog inputs always read '0'.

14.12.3 OPEN-DRAIN CONTROL

The ODCONF register (Register 14-46) controls the open-drain feature of the port. Open-drain operation is independently selected for each pin. When an ODCONF bit is set, the corresponding port output becomes an open-drain driver capable of sinking current only. When an ODCONF bit is cleared, the corresponding port output pin is the standard push-pull drive capable of sourcing and sinking current.

Note: It is not necessary to set open-drain control when using the pin for I^2C; the I^2C module controls the pin and makes the pin open-drain.

14.12.4 SLEW RATE CONTROL

The SLRCONF register (Register 14-47) controls the slew rate option for each port pin. Slew rate control is independently selectable for each port pin. When an SLRCONF bit is set, the corresponding port pin drive is slew rate limited. When an SLRCONF bit is cleared, The corresponding port pin drive slews at the maximum rate possible.

14.12.5 INPUT THRESHOLD CONTROL

The INLVLF register (Register 14-48) controls the input voltage threshold for each of the available PORTF input pins. A selection between the Schmitt Trigger CMOS or the TTL Compatible thresholds is available. The input threshold is important in determining the value of a read of the PORTF register and also the level at which an interrupt-on-change occurs, if that feature is enabled. See Table 39-4 for more information on threshold levels.

Note: Changing the input threshold selection should be performed while all peripheral modules are disabled. Changing the threshold level during the time a module is active may inadvertently generate a transition associated with an input pin, regardless of the actual voltage level on that pin.

14.12.6 ANALOG CONTROL

The ANSELF register (Register 14-44) is used to configure the Input mode of an I/O pin to analog. Setting the appropriate ANSELF bit high will cause all digital reads on the pin to be read as '0' and allow analog functions on the pin to operate correctly.

The state of the ANSELF bits has no effect on digital output functions. A pin with its TRIS bit clear and its ANSEL bit set will still operate as a digital output, but the Input mode will be analog. This can cause unexpected behavior when executing read-modify-write instructions on the affected port.

Note:	The ANSELF bits default to the Analog mode after Reset. To use any pins as digital general purpose or peripheral inputs, the corresponding ANSEL bits must be initialized to '0' by user software.

14.12.7 WEAK PULL-UP CONTROL

The WPUF register (Register 14-45) controls the individual weak pull-ups for each PORT pin.

14.12.8 PORTF FUNCTIONS AND OUTPUT PRIORITIES

Each PORTF pin is multiplexed with other functions.

Each pin defaults to the PORT latch data after Reset. Other output functions are selected with the peripheral pin select logic or by enabling an analog output, such as the DAC. See **Section 15.0 "Peripheral Pin Select (PPS) Module"** for more information.

Analog input functions, such as ADC and comparator inputs are not shown in the peripheral pin select lists. Digital output functions may continue to control the pin when it is in Analog mode.

14.13 Register Definitions: PORTF

REGISTER 14-41: PORTF: PORTF REGISTER

R/W-x/u	R/W-x/u	R/W-x/u	R/W-x/u	R/W-x/u	R/W-x/u	R/W-x/u	R/W-x/u
RF7	RF6	RF5	RF4	RF3	RF2	RF1	RF0
bit 7							bit 0

Legend:		
R = Readable bit	W = Writable bit	U = Unimplemented bit, read as ‘0’
u = Bit is unchanged	x = Bit is unknown	-n/n = Value at POR and BOR/Value at all other Resets
‘1’ = Bit is set	‘0’ = Bit is cleared	

bit 7-0 **RF<7:0>**: PORTF I/O Value bits(1)
1 = Port pin is ≥ V_{IH}
0 = Port pin is ≤ V_{IL}

Note 1: Writes to PORTF are actually written to corresponding LATF register. Reads from PORTF register is return of actual I/O pin values.

REGISTER 14-42: TRISF: PORTF TRI-STATE REGISTER

R/W-1/1	R/W-1/1	R/W-1/1	R/W-1/1	R/W-1/1	R/W-1/1	R/W-1/1	R/W-1/1
TRISF7	TRISF6	TRISF5	TRISF4	TRISF3	TRISF2	TRISF1	TRISF0
bit 7							bit 0

Legend:		
R = Readable bit	W = Writable bit	U = Unimplemented bit, read as ‘0’
u = Bit is unchanged	x = Bit is unknown	-n/n = Value at POR and BOR/Value at all other Resets
‘1’ = Bit is set	‘0’ = Bit is cleared	

bit 7-0 **TRISF<7:0>:** PORTF Tri-State Control bit
1 = PORTF pin configured as an input (tri-stated)
0 = PORTF pin configured as an output

REGISTER 14-43: LATF: PORTF DATA LATCH REGISTER

R/W-x/u	R/W-x/u	R/W-x/u	R/W-x/u	R/W-x/u	R/W-x/u	R/W-x/u	R/W-x/u
LATF7	LATF6	LATF5	LATF4	LATF3	LATF2	LATF1	LATF0
bit 7							bit 0

Legend:		
R = Readable bit	W = Writable bit	U = Unimplemented bit, read as ‘0’
u = Bit is unchanged	x = Bit is unknown	-n/n = Value at POR and BOR/Value at all other Resets
‘1’ = Bit is set	‘0’ = Bit is cleared	

bit 7-0 **LATF<7:0>**: RF<7:0> Output Latch Value bits(1)

Note 1: Writes to PORTF are actually written to corresponding LATF register. Reads from PORTF register is return of actual I/O pin values.

REGISTER 14-44: ANSELF: PORTF ANALOG SELECT REGISTER

R/W-1/1	R/W-1/1	R/W-1/1	R/W-1/1	R/W-1/1	R/W-1/1	R/W-1/1	R/W-1/1
ANSF7	ANSF6	ANSF5	ANSF4	ANSF3	ANSF2	ANSF1	ANSF0
bit 7							bit 0

Legend:		
R = Readable bit	W = Writable bit	U = Unimplemented bit, read as ‘0’
u = Bit is unchanged	x = Bit is unknown	-n/n = Value at POR and BOR/Value at all other Resets
‘1’ = Bit is set	‘0’ = Bit is cleared	

bit 7-0 **ANSF<7:0>**: Analog Select between Analog or Digital Function on pins RF<7:0>, respectively
1 = Analog input. Pin is assigned as analog input(1). Digital input buffer disabled.
0 = Digital I/O. Pin is assigned to port or digital special function.

Note 1: When setting a pin to an analog input, the corresponding TRIS bit must be set to Input mode in order to allow external control of the voltage on the pin.

REGISTER 14-45: WPUF: WEAK PULL-UP PORTF REGISTER

R/W-0/0	R/W-0/0	R/W-0/0	R/W-0/0	R/W-0/0	R/W-0/0	R/W-0/0	R/W-0/0
WPUF7	WPUF6	WPUF5	WPUF4	WPUF3	WPUF2	WPUF1	WPUF0
bit 7							bit 0

Legend:		
R = Readable bit	W = Writable bit	U = Unimplemented bit, read as ‘0’
u = Bit is unchanged	x = Bit is unknown	-n/n = Value at POR and BOR/Value at all other Resets
‘1’ = Bit is set	‘0’ = Bit is cleared	

bit 7-0 **WPUF<7:0>**: Weak Pull-up Register bits(1)
1 = Pull-up enabled
0 = Pull-up disabled

Note 1: The weak pull-up device is automatically disabled if the pin is configured as an output.

REGISTER 14-46: ODCONF: PORTF OPEN-DRAIN CONTROL REGISTER

R/W-0/0	R/W-0/0	R/W-0/0	R/W-0/0	R/W-0/0	R/W-0/0	R/W-0/0	R/W-0/0
ODCF7	ODCF6	ODCF5	ODCF4	ODCF3	ODCF2	ODCF1	ODCF0
bit 7							bit 0

Legend:		
R = Readable bit	W = Writable bit	U = Unimplemented bit, read as ‘0’
u = Bit is unchanged	x = Bit is unknown	-n/n = Value at POR and BOR/Value at all other Resets
‘1’ = Bit is set	‘0’ = Bit is cleared	

bit 7-0 **ODCF<7:0>:** PORTF Open-Drain Enable bits
For RF<7:0> pins, respectively
1 = Port pin operates as open-drain drive (sink current only)
0 = Port pin operates as standard push-pull drive (source and sink current)

REGISTER 14-47: SLRCONF: PORTF SLEW RATE CONTROL REGISTER

R/W-1/1	R/W-1/1	R/W-1/1	R/W-1/1	R/W-1/1	R/W-1/1	R/W-1/1	R/W-1/1
SLRF7	SLRF6	SLRF5	SLRF4	SLRF3	SLRF2	SLRF1	SLRF0
bit 7							bit 0

Legend:		
R = Readable bit	W = Writable bit	U = Unimplemented bit, read as ‘0’
u = Bit is unchanged	x = Bit is unknown	-n/n = Value at POR and BOR/Value at all other Resets
‘1’ = Bit is set	‘0’ = Bit is cleared	

bit 7-0 **SLRF<7:0>:** PORTF Slew Rate Enable bits
For RF<7:0> pins, respectively
1 = Port pin slew rate is limited
0 = Port pin slews at maximum rate

REGISTER 14-48: INLVLF: PORTF INPUT LEVEL CONTROL REGISTER

R/W-1/1	R/W-1/1	R/W-1/1	R/W-1/1	R/W-1/1	R/W-1/1	R/W-1/1	R/W-1/1
INLVLF7	INLVLF6	INLVLF5	INLVLF4	INLVLF3	INLVLF2	INLVLF1	INLVLF0
bit 7							bit 0

Legend:		
R = Readable bit	W = Writable bit	U = Unimplemented bit, read as ‘0’
u = Bit is unchanged	x = Bit is unknown	-n/n = Value at POR and BOR/Value at all other Resets
‘1’ = Bit is set	‘0’ = Bit is cleared	

bit 7-0 **INLVLF<7:0>:** PORTF Input Level Select bits
For RF<7:0> pins, respectively
1 = ST input used for PORT reads and interrupt-on-change
0 = TTL input used for PORT reads and interrupt-on-change

REGISTER 14-49: HIDRVF: PORTF HIGH DRIVE CONTROL REGISTER

R/W-0/0	U-0	U-0	U-0	U-0	U-0	U-0	U-0
HIDF7	—	—	—	—	—	—	—
bit 7							bit 0

Legend:		
R = Readable bit	W = Writable bit	U = Unimplemented bit, read as ‘0’
u = Bit is unchanged	x = Bit is unknown	-n/n = Value at POR and BOR/Value at all other Resets
‘1’ = Bit is set	‘0’ = Bit is cleared	

bit 7 **HIDF7:** PORTF High Drive Enable bit
For RF7 pin
1 = High current source and sink enabled
0 = Standard current source and sink

bit 6-0 **Unimplemented:** Read as ‘0’

TABLE 14-7: SUMMARY OF REGISTERS ASSOCIATED WITH PORTF(1)

Name	Bit 7	Bit 6	Bit 5	Bit 4	Bit 3	Bit 2	Bit 1	Bit 0	Register on Page
PORTF	RF7	RF6	RF5	RF4	RF3	RF2	RF1	RF0	255
TRISF	TRISF7	TRISF6	TRISF5	TRISF4	TRISF3	TRISF2	TRISF1	TRISF0	255
LATF	LATF7	LATF6	LATF5	LATF4	LATF3	LATF2	LATF1	LATF0	256
ANSELF	ANSF7	ANSF6	ANSF5	ANSF4	ANSF3	ANSF2	ANSF1	ANSF0	256
WPUF	WPUF7	WPUF6	WPUF5	WPUF4	WPUF3	WPUF2	WPUF1	WPUF0	256
ODCONF	ODCF7	ODCF6	ODCF5	ODCF4	ODCF3	ODCF2	ODCF1	ODCF0	257
SLRCONF	SLRF7	SLRF6	SLRF5	SLRF4	SLRF3	SLRF2	SLRF1	SLRF0	257
INLVLF	INLVLF7	INLVLF6	INLVLF5	INLVLF4	INLVLF3	INLVLF2	INLVLF1	INLVLF0	257
HIDRVF	HIDF7	—	—	—	—	—	—	—	258

Legend: x = unknown, u = unchanged, – = unimplemented locations read as ‘0’. Shaded cells are not used by PORTF.

Note 1: Present only on PIC16(L)F19175/76/85/86 devices.

15.0 PERIPHERAL PIN SELECT (PPS) MODULE

The Peripheral Pin Select (PPS) module connects peripheral inputs and outputs to the device I/O pins. Only digital signals are included in the selections.

All analog inputs and outputs remain fixed to their assigned pins. Input and output selections are independent as shown in the simplified block diagram Figure 15-1.

FIGURE 15-1: SIMPLIFIED PPS BLOCK DIAGRAM

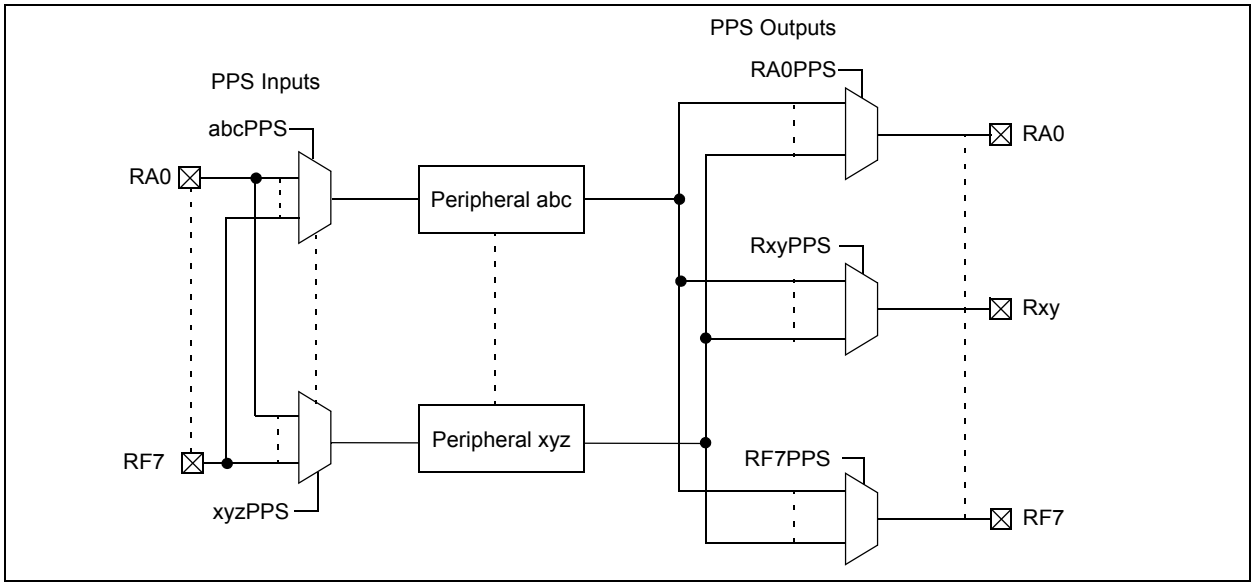

15.1 PPS Inputs

Each peripheral has a PPS register with which the inputs to the peripheral are selected. Inputs include the device pins.

Although every peripheral has its own PPS input selection register, the selections are identical for every peripheral as shown in Register 15-1.

Note:	The notation “xxx” in the register name is a place holder for the peripheral identifier. For example, CLC1PPS.

15.2 PPS Outputs

Each I/O pin has a PPS register with which the pin output source is selected. With few exceptions, the port TRIS control associated with that pin retains control over the pin output driver. Peripherals that control the pin output driver as part of the peripheral operation will override the TRIS control as needed. These peripherals are (See **Section 15.3 “Bidirectional Pins”**):

- EUSART (synchronous operation)
- MSSP (I^2C)
- CWG

Although every pin has its own PPS peripheral selection register, the selections are identical for every pin as shown in Register 15-2.

Note:	The notation “Rxy” is a place holder for the pin port and bit identifiers. For example, x and y for PORTA bit 0 would be A and 0, respectively, resulting in the pin PPS output selection register RA0PPS.

TABLE 15-1: PPS INPUT SIGNAL ROUTING OPTIONS

INPUT SIGNAL NAME	Input Register Name	Default Location at POR	Remappable to Pins of PORTx												
			PIC16(L)F19155/56			PIC16(L)F19175/76				PIC16(L)F19185/86					
			PORTA	PORTB	PORTC	PORTA	PORTB	PORTC	PORTD	PORTA	PORTB	PORTC	PORTD	PORTE	PORTF
INT	INTPPS	RB0	•	•		•	•			•	•				
T0CKI	T0CKIPPS	RA4	•	•		•	•			•					•
T1CKI	T1CKIPSS	RC0	•		•	•		•				•		•	
T1G	T1GPPS	RB5		•	•		•	•			•	•			
T2IN	T2INPPS	RC3	•		•	•		•		•		•			
T4IN	T4INPPS	RC1		•	•		•	•			•	•			
CCP1	CCP1PPS	RC2		•	•		•	•				•			•
CCP2	CCP2PPS	RC1		•	•		•	•				•			•
SMT1WIN	SMT1WINPPS	RC0		•	•		•	•				•			•
SMT1SIG	SMT1SIGPPS	RC1		•	•		•	•				•			•
CWG1IN	CWG1INPPS	RB0		•	•		•		•		•		•		
CLCIN0	CLCIN0PPS	RA0	•		•	•		•		•		•			
CLCIN1	CLCIN1PPS	RA1	•		•	•		•		•		•			
CLCIN2	CLCIN2PPS	RB6		•	•		•		•		•		•		
CLCIN3	CLCIN3PPS	RB7		•	•		•		•		•		•		
ADCACT	ADACTPPS	RB4		•	•		•		•		•		•		
SCK1/SCL1	SSP1CLKPPS	RC3		•	•		•	•			•	•			
SDI1/SDA1	SSP1DATPPS	RC4		•	•		•	•			•	•			
SS1	SSP1SS1PPS	RA5	•		•	•			•	•			•		
RX1/DT1	RX1PPS	RC7		•	•		•	•				•			•
CK1	TX1PPS	RC6		•	•		•	•				•			•
RX2/DT2	RX2PPS	RB7		•	•		•		•		•		•		
CK2	TX2PPS	RB6		•	•		•		•		•		•		

© 2017-2019 Microchip Technology Inc.

TABLE 15-2: PPS INPUT REGISTER VALUES

Desired Input Pin	Value to Write to Register(1)	Desired Input Pin	Value to Write to Register(1)
RA0	0x00	RC7	0x17
RA1	0x01	RD0	0x18
RA2	0x02	RD1	0x19
RA3	0x03	RD2	0x1A
RA4	0x04	RD3	0x1B
RA5	0x05	RD4	0x1C
RA6	0x06	RD5	0x1D
RA7	0x07	RD6	0x1E
RB0	0x08	RD7	0x1F
RB1	0x09	RE0	0x20
RB2	0x0A	RE1	0x21
RB3	0x0B	RE2	0x22
RB4	0x0C	RE3	0x23
RB5	0x0D	RF0	0x28
RB6	0x0E	RF1	0x29
RB7	0x0F	RF2	0x2A
RC0	0x10	RF3	0x2B
RC1	0x11	RF4	0x2C
RC2	0x12	RF5	0x2D
RC3	0x13	RF6	0x2E
RC4	0x14	RF7	0x2F
RC6	0x16		

Note 1: Only a few of the values in this column are valid for any given signal. For example, since the INT signal can only be mapped to PORTA or PORTB pins, only the register values 0x00-0x0F (corresponding to RA<7:0> and RB<7:0>) are valid values to write to the INTPPS register.

15.3 Bidirectional Pins

PPS selections for peripherals with bidirectional signals on a single pin must be made so that the PPS input and PPS output select the same pin. Peripherals that have bidirectional signals include:

- EUSART (synchronous operation)
- MSSP (I^2C)

Note: The I^2C SCLx and SDAx functions can be remapped through PPS. However, only the RB1, RB2, RC3 and RC4 pins have the I^2C and SMBus specific input buffers implemented (I^2C mode disables INLVL and sets thresholds that are specific for I^2C). If the SCLx or SDAx functions are mapped to some other pin (other than RB1, RB2, RC3 or RC4), the general purpose TTL or ST input buffers (as configured based on INLVL register setting) will be used instead. In most applications, it is therefore recommended only to map the SCLx and SDAx pin functions to the RB1, RB2, RC3 or RC4 pins.

15.4 PPS Lock

The PPS includes a mode in which all input and output selections can be locked to prevent inadvertent changes. PPS selections are locked by setting the PPSLOCKED bit of the PPSLOCK register. Setting and clearing this bit requires a special sequence as an extra precaution against inadvertent changes. Examples of setting and clearing the PPSLOCKED bit are shown in Example 15-1.

EXAMPLE 15-1: PPS LOCK/UNLOCK SEQUENCE

```
; suspend interrupts
    BCF     INTCON,GIE
;   BANKSEL PPSLOCK     ; set bank
; required sequence, next 5 instructions
    MOVLW   0x55
    MOVWF   PPSLOCK
    MOVLW   0xAA
    MOVWF   PPSLOCK
; Set PPSLOCKED bit to disable writes or
; Clear PPSLOCKED bit to enable writes
    BSF     PPSLOCK,PPSLOCKED
; restore interrupts
    BSF     INTCON,GIE
```

15.5 PPS Permanent Lock

The PPS can be permanently locked by setting the PPS1WAY Configuration bit. When this bit is set, the PPSLOCKED bit can only be cleared and set one time after a device Reset. This allows for clearing the PPSLOCKED bit so that the input and output selections can be made during initialization. When the PPSLOCKED bit is set after all selections have been made, it will remain set and cannot be cleared until after the next device Reset event.

15.6 Operation During Sleep

PPS input and output selections are unaffected by Sleep.

15.7 Effects of a Reset

A device Power-on-Reset (POR) clears all PPS input and output selections to their default values (Permanent Lock Removed). All other Resets leave the selections unchanged. Default input selections are shown in Table 15-1 and Table 15-2.

TABLE 15-3: PPS OUTPUT SIGNAL ROUTING OPTIONS

Output Signal Name	Output Register Value	Remappable to Pins of PORTx													
		PIC16(L)F19155/56			PIC16(L)F19175/76					PIC16(L)F19185/86					
		PORTA	PORTB	PORTC	PORTA	PORTB	PORTC	PORTD	PORTE	PORTA	PORTB	PORTC	PORTD	PORTE	PORTF
RTCC	0x18	•		•	•		•			•		•			
ADGRDB	0x17	•		•	•		•			•					•
ADGRDA	0x16	•		•	•		•			•					•
TMR0	0x15		•	•		•	•					•			•
SDO1/SDA1	0x14		•	•		•	•				•	•			
SCK1/SCL1	0x13		•	•		•	•				•	•			
C2OUT	0x12	•		•	•				•	•				•	
C1OUT	0x11	•		•	•			•		•			•		
DT2	0x10		•	•		•		•			•		•		
TX2/CK2	0x0F		•	•		•		•			•		•		
DT1	0x0E		•	•		•	•					•			•
TX1/CK1	0x0D		•	•		•	•					•			•
PWM4OUT	0x0C		•	•		•		•			•		•		
PWM3OUT	0x0B		•	•		•		•			•		•		
CCP2	0x0A		•	•		•	•					•			•
CCP1	0x09		•	•		•	•					•			•
CWG1D	0x08		•	•		•		•			•		•		
CWG1C	0x07		•	•		•		•			•		•		
CWG1B	0x06		•	•		•		•			•		•		
CWG1A	0x05		•	•		•	•				•	•			
CLC4OUT	0x04		•	•		•		•			•		•		
CLC3OUT	0x03		•	•		•		•			•		•		
CLC2OUT	0x02	•		•	•		•			•					•
CLC1OUT	0x01	•		•	•		•			•					•

© 2017-2019 Microchip Technology Inc.

15.8 Register Definitions: PPS Input Selection

REGISTER 15-1: xxxPPS: PERIPHERAL xxx INPUT SELECTION(1)

U-0	U-0	U-0	R/W-q/u	R/W/q/u	R/W-q/u	R/W-q/u	R/W-q/u
—	—	—	xxxPPS<4:0>				
bit 7							bit 0

Legend:		
R = Readable bit	W = Writable bit	U = Unimplemented bit, read as ‘0’
u = Bit is unchanged	x = Bit is unknown	-n/n = Value at POR and BOR/Value at all other Resets
‘1’ = Bit is set	‘0’ = Bit is cleared	q = value depends on peripheral

bit 7-5 **Unimplemented:** Read as ‘0’

bit 4-0 **xxxPPS<4:0>:** Peripheral xxx Input Selection bits
See Table 15-1 and Table 15-2.(2)

Note 1: The “xxx” in the register name “xxxPPS” represents the input signal function name, such as “INT”, “T0CKI”, “RX”, etc. This register summary shown here is only a prototype of the array of actual registers, as each input function has its own dedicated SFR (ex: INTPPS, T0CKIPPS, RXPPS, etc.).

2: Each specific input signal may only be mapped to a subset of these I/O pins, as shown in Table 15-2. Attempting to map an input signal to a non-supported I/O pin will result in undefined behavior. For example, the “INT” signal map be mapped to any PORTA or PORTB pin. Therefore, the INTPPS register may be written with values from 0x00-0x0F (corresponding to RA0-RB7). Attempting to write 0x10 or higher to the INTPPS register is not supported and will result in undefined behavior.

REGISTER 15-2: RxyPPS: PIN Rxy OUTPUT SOURCE SELECTION REGISTER

U-0	U-0	U-0	R/W-0/u	R/W-0/u	R/W-0/u	R/W-0/u	R/W-0/u
—	—	—	RxyPPS<4:0>				
bit 7							bit 0

Legend:		
R = Readable bit	W = Writable bit	U = Unimplemented bit, read as ‘0’
u = Bit is unchanged	x = Bit is unknown	-n/n = Value at POR and BOR/Value at all other Resets
‘1’ = Bit is set	‘0’ = Bit is cleared	

bit 7-5 **Unimplemented:** Read as ‘0’

bit 4-0 **RxyPPS<4:0>:** Pin Rxy Output Source Selection bits(1)
See Table 15-3.

Note 1: TRIS control is overridden by the peripheral as required.

REGISTER 15-3: PPSLOCK: PPS LOCK REGISTER

U-0	U-0	U-0	U-0	U-0	U-0	U-0	R/W-0/0
—	—	—	—	—	—	—	PPSLOCKED
bit 7							bit 0

Legend:		
R = Readable bit	W = Writable bit	U = Unimplemented bit, read as ‘0’
u = Bit is unchanged	x = Bit is unknown	-n/n = Value at POR and BOR/Value at all other Resets
‘1’ = Bit is set	‘0’ = Bit is cleared	

bit 7-1 **Unimplemented:** Read as ‘0’

bit 0 **PPSLOCKED:** PPS Locked bit
1= PPS is locked. PPS selections can not be changed.
0= PPS is not locked. PPS selections can be changed.

TABLE 15-4: SUMMARY OF REGISTERS ASSOCIATED WITH THE PPS MODULE

Name	Bit 7	Bit 6	Bit 5	Bit 4	Bit 3	Bit 2	Bit 1	Bit 0	Register on page
Inputs									
PPSLOCK	—	—	—	—	—	—	—	PPSLOCKED	265
INTPPS	—	—	—	INTPPS<4:0>					264
T0CKIPPS	—	—	—	T0CKIPPS<4:0>					264
T1CKIPPS	—	—	—	T1CKIPPS<4:0>					264
T1GPPS	—	—	—	T1GPPS<4:0>					264
T2INPPS	—	—	—	T2INPPS<4:0>					264
T4INPPS	—	—	—	T4INPPS<4:0>					264
CCP1PPS	—	—	—	CCP1PPS<4:0>					264
CCP2PPS	—	—	—	CCP2PPS<4:0>					264
SMT1WINPPS	—	—	—	SMT1WINPPS<4:0>					264
SMT1SIGPPS	—	—	—	SMT1SIGPPS<4:0>					264
CWG1PPS	—	—	—	CWG1PPS<4:0>					264
CLCIN0PPS	—	—	—	CLCIN0PPS<4:0>					264
CLCIN1PPS	—	—	—	CLCIN1PPS<4:0>					264
CLCIN2PPS	—	—	—	CLCIN2PPS<4:0>					264
CLCIN3PPS	—	—	—	CLCIN3PPS<4:0>					264
ADCACTPPS	—	—	—	ADCACTPPS<4:0>					264
SSP1CLKPPS	—	—	—	SSP1CLKPPS<4:0>					264
SSP1DATPPS	—	—	—	SSP1DATPPS<4:0>					264
SSP1SSPPS	—	—	—	SSP1SSPPS<4:0>					264
RX1PPS	—	—	—	RX1PPS<4:0>					264
TX1PPS	—	—	—	TX1PPS<4:0>					264
RX2PPS	—	—	—	RX2PPS<4:0>					264
TX2PPS	—	—	—	TX2PPS<4:0>					264
Outputs									
RA0PPS	—	—	—	RA0PPS<4:0>					265
RA1PPS	—	—	—	RA1PPS<4:0>					265
RA2PPS	—	—	—	RA2PPS<4:0>					265
RA3PPS	—	—	—	RA3PPS<4:0>					265
RA4PPS	—	—	—	RA4PPS<4:0>					265
RA5PPS	—	—	—	RA5PPS<4:0>					265
RA6PPS	—	—	—	RA6PPS<4:0>					265
RA7PPS	—	—	—	RA7PPS<4:0>					265
RB0PPS	—	—	—	RB0PPS<4:0>					265
RB1PPS	—	—	—	RB1PPS<4:0>					265
RB2PPS	—	—	—	RB2PPS<4:0>					265
RB3PPS	—	—	—	RB3PPS<4:0>					265
RB4PPS	—	—	—	RB4PPS<4:0>					265
RB5PPS	—	—	—	RB5PPS<4:0>					265
RB6PPS	—	—	—	RB6PPS<4:0>					265
RB7PPS	—	—	—	RB7PPS<4:0>					265
RC0PPS	—	—	—	RC0PPS<4:0>					265
RC1PPS	—	—	—	RC1PPS<4:0>					265
RC2PPS	—	—	—	RC2PPS<4:0>					265
RC3PPS	—	—	—	RC3PPS<4:0>					265
RC4PPS	—	—	—	RC4PPS<4:0>					265
RC6PPS	—	—	—	RC6PPS<4:0>					265
RC7PPS	—	—	—	RC7PPS<4:0>					265
RD0PPS	—	—	—	RD0PPS<4:0>					265

TABLE 15-4: SUMMARY OF REGISTERS ASSOCIATED WITH THE PPS MODULE (CONTINUED)

Name	Bit 7	Bit 6	Bit 5	Bit 4	Bit 3	Bit 2	Bit 1	Bit 0	Register on page
RD1PPS	—	—	—	RD1PPS<4:0>					265
RD2PPS	—	—	—	RD2PPS<4:0>					265
RD3PPS	—	—	—	RD3PPS<4:0>					265
RD4PPS	—	—	—	RD4PPS<4:0>					265
RD5PPS	—	—	—	RD5PPS<4:0>					265
RD6PPS	—	—	—	RD6PPS<4:0>					265
RD7PPS	—	—	—	RD7PPS<4:0>					265
RE0PPS	—	—	—	RE0PPS<4:0>					265
RE1PPS	—	—	—	RE1PPS<4:0>					265
RE2PPS	—	—	—	RE2PPS<4:0>					265
RF0PPS	—	—	—	RF0PPS<4:0>					265
RF1PPS	—	—	—	RF1PPS<4:0>					265
RF2PPS	—	—	—	RF2PPS<4:0>					265
RF3PPS	—	—	—	RF3PPS<4:0>					265
RF4PPS	—	—	—	RF4PPS<4:0>					265
RF5PPS	—	—	—	RF5PPS<4:0>					265
RF6PPS	—	—	—	RF6PPS<4:0>					265
RF7PPS	—	—	—	RF7PPS<4:0>					265

Legend: — = unimplemented, read as '0'. Shaded cells are unused by the PPS module.

16.0 PERIPHERAL MODULE DISABLE (PMD)

The PIC16(L)F19155/56/75/76/85/86 provides the ability to disable selected modules, placing them into the lowest possible Power mode.

For legacy reasons, all modules are ON by default following any Reset.

16.1 Disabling a Module

Disabling a module has the following effects:

- All clock and control inputs to the module are suspended; there are no logic transitions, and the module will not function.
- The module is held in Reset:
  - Writing to SFRs is disabled
  - Reads return 00h

16.2 Enabling a module

When the register bit is cleared, the module is re-enabled and will be in its Reset state; SFR data will reflect the POR Reset values.

Depending on the module, it may take up to one full instruction cycle for the module to become active. There should be no interaction with the module (e.g., writing to registers) for at least one instruction after it has been re-enabled.

16.3 Disabling a Module

When a module is disabled, all the associated PPS selection registers (Registers xxxPPS Register 15-1, 15-2, and 15-3), are also disabled.

16.4 System Clock Disable

Setting SYSCMD (PMD0, Register 16-1) disables the system clock (FOSC) distribution network to the peripherals. Not all peripherals make use of SYSCLK, so not all peripherals are affected. Refer to the specific peripheral description to see if it will be affected by this bit.

REGISTER 16-1: PMD0: PMD CONTROL REGISTER 0

R/W-0/0	R/W-0/0	R/W-0/0	U-0	U-0	R/W-0/0	U-0	R/W-0/0
SYSCMD	FVRMD	ACTMD	—	—	NVMMD	—	IOCMD
7							0

Legend:		
R = Readable bit	W = Writable bit	U = Unimplemented bit, read as '0'
u = Bit is unchanged	x = Bit is unknown	-n/n = Value at POR and BOR/Value at all other Resets
'1' = Bit is set	'0' = Bit is cleared	q = Value depends on condition

bit 7 **SYSCMD:** Disable Peripheral System Clock Network bit
See description in **Section 16.4 "System Clock Disable"**.
1 = System clock network disabled (a.k.a. FOSC)
0 = System clock network enabled

bit 6 **FVRMD:** Disable Fixed Voltage Reference (FVR) bit
1 = FVR module disabled
0 = FVR module enabled

bit 5 **ACTMD:** Disable Active Clock Tuning (ACT) bit
1 = ACT module disabled
0 = ACT module enabled

bit 4-3 **Unimplemented:** Read as '0'

bit 2 **NVMMD:** NVM Module Disable bit(1)
1 = User memory reading and writing is disabled; NVMCON registers cannot be written; FSR access to these locations returns zero.
0 = NVM module enabled

bit 1 **Unimplemented:** Read as '0'

bit 0 **IOCMD:** Disable Interrupt-on-Change bit, All Ports
1 = IOC module(s) disabled
0 = IOC module(s) enabled

Note 1: When enabling NVM, a delay of up to 1 µs may be required before accessing data.

REGISTER 16-2: PMD1: PMD CONTROL REGISTER 1

U-0	U-0	U-0	R/W-0/0	U-0	R/W-0/0	R/W-0/0	R/W-0/0
—	—	—	TMR4MD	—	TMR2MD	TMR1MD	TMR0MD
bit 7							bit 0

Legend:		
R = Readable bit	W = Writable bit	U = Unimplemented bit, read as ‘0’
u = Bit is unchanged	x = Bit is unknown	-n/n = Value at POR and BOR/Value at all other Resets
‘1’ = Bit is set	‘0’ = Bit is cleared	q = Value depends on condition

bit 7-5 **Unimplemented:** Read as ‘0’

bit 4 **TMR4MD:** Disable Timer TMR4 bit
1 = Timer4 module disabled
0 = Timer4 module enabled

bit 3 **Unimplemented:** Read as ‘0’

bit 2 **TMR2MD:** Disable Timer TMR2 bit
1 = Timer2 module disabled
0 = Timer2 module enabled

bit 1 **TMR1MD:** Disable Timer TMR1 bit
1 = Timer1 module disabled
0 = Timer1 module enabled

bit 0 **TMR0MD:** Disable Timer TMR0 bit
1 = Timer0 module disabled
0 = Timer0 module enabled

REGISTER 16-3: PMD2: PMD CONTROL REGISTER 2

R/W-0/0	R/W-0/0	R/W-0/0	U-0	U-0	R/W-0/0	R/W-0/0	R/W-0/0
RTCCMD	DACMD	ADCMD	—	—	CMP2MD	CMP1MD	ZCDMD
bit 7							bit 0

Legend:		
R = Readable bit	W = Writable bit	U = Unimplemented bit, read as ‘0’
u = Bit is unchanged	x = Bit is unknown	-n/n = Value at POR and BOR/Value at all other Resets
‘1’ = Bit is set	‘0’ = Bit is cleared	q = Value depends on condition

bit 7 **RTCCMD:** Disable RTCC bit
1 = RTCC module disabled
0 = RTCC module enabled

bit 6 **DACMD:** Disable DAC bit
1 = DAC module disabled
0 = DAC module enabled

bit 5 **ADCMD:** Disable ADC bit
1 = ADC module disabled
0 = ADC module enabled

bit 4-3 **Unimplemented:** Read as ‘0’

bit 2 **CMP2MD:** Disable Comparator C2 bit
1 = C2 module disabled
0 = C2 module enabled

bit 1 **CMP1MD:** Disable Comparator C1 bit
1 = C1 module disabled
0 = C1 module enabled

bit 0 **ZCDMD:** Disable ZCD
1 = ZCD module disabled
0 = ZCD module enabled

REGISTER 16-4: PMD3: PMD CONTROL REGISTER 3

U-0	U-0	U-0	U-0	R/W-0/0	R/W-0/0	R/W-0/0	R/W-0/0
—	—	—	—	PWM4MD	PWM3MD	CCP2MD	CCP1MD
bit 7							bit 0

Legend:		
R = Readable bit	W = Writable bit	U = Unimplemented bit, read as ‘0’
u = Bit is unchanged	x = Bit is unknown	-n/n = Value at POR and BOR/Value at all other Resets
‘1’ = Bit is set	‘0’ = Bit is cleared	q = Value depends on condition

bit 7-4 **Unimplemented:** Read as ‘0’

bit 3 **PWM4MD:** Disable Pulse-Width Modulator PWM4 bit
1 = PWM4 module disabled
0 = PWM4 module enabled

bit 2 **PWM3MD:** Disable Pulse-Width Modulator PWM3 bit
1 = PWM3 module disabled
0 = PWM3 module enabled

bit 1 **CCP2MD:** Disable CCP2 bit
1 = CCP2 module disabled
0 = CCP2 module enabled

bit 0 **CCP1MD:** Disable CCP1 bit
1 = CCP1 module disabled
0 = CCP1 module enabled

REGISTER 16-5: PMD4: PMD CONTROL REGISTER 4

R/W-0/0	R/W-0/0	U-0	R/W-0/0	U-0	U-0	U-0	R/W-0/0
UART2MD	UART1MD	—	MSSP1MD	—	—	—	CWG1MD
bit 7							bit 0

Legend:		
R = Readable bit	W = Writable bit	U = Unimplemented bit, read as ‘0’
u = Bit is unchanged	x = Bit is unknown	-n/n = Value at POR and BOR/Value at all other Resets
‘1’ = Bit is set	‘0’ = Bit is cleared	q = Value depends on condition

bit 7 **UART2MD:** Disable EUSART2 bit
1 = EUSART2 module disabled
0 = EUSART2 module enabled

bit 6 **UART1MD:** Disable EUSART1 bit
1 = EUSART1 module disabled
0 = EUSART1 module enabled

bit 5 **Unimplemented:** Read as ‘0’

bit 4 **MSSP1MD:** Disable MSSP1 bit
1 = MSSP1 module disabled
0 = MSSP1 module enabled

bit 3-1 **Unimplemented:** Read as ‘0’

bit 0 **CWG1MD:** Disable CWG1 bit
1 = CWG1 module disabled
0 = CWG1 module enabled

REGISTER 16-6: PMD5 – PMD CONTROL REGISTER 5

U-0	R/W-0/0	R/W-0/0	R/W-0/0	R/W-0/0	R/W-0/0	R/W-0/0	U-0
—	SMT1MD	LCDMD	CLC4MD	CLC3MD	CLC2MD	CLC1MD	—
bit 7							bit 0

Legend:		
R = Readable bit	W = Writable bit	U = Unimplemented bit, read as ‘0’
u = Bit is unchanged	x = Bit is unknown	-n/n = Value at POR and BOR/Value at all other Resets
‘1’ = Bit is set	‘0’ = Bit is cleared	q = Value depends on condition

bit 7 **Unimplemented:** Read as ‘0’

bit 6 **SMT1MD:** Disable Signal Measurement Timer1 bit
1 = SMT1 module disabled
0 = SMT1 module enabled

bit 5 **LCDMD:** Disable LCD bit
1 = LCD module disabled
0 = LCD module enabled

bit 4 **CLC4MD:** Disable CLC4 bit
1 = CLC4 module disabled
0 = CLC4 module enabled

bit 3 **CLC3MD:** Disable CLC3 bit
1 = CLC3 module disabled
0 = CLC3 module enabled

bit 2 **CLC2MD:** Disable CLC2 bit
1 = CLC2 module disabled
0 = CLC2 module enabled

bit 1 **CLC1MD:** Disable CLC bit
1 = CLC1 module disabled
0 = CLC1 module enabled

bit 0 **Unimplemented:** Read as ‘0’

17.0 INTERRUPT-ON-CHANGE (IOC)

All pins on all PORTA, PORTB, and PORTC, excluding RC5 and RE3 of PORTE, can be configured to operate as Interrupt-On-Change (IOC) pins. An interrupt can be generated by detecting a signal that has either a rising edge or a falling edge. Any individual pin, or combination of pins, can be configured to generate an interrupt. The interrupt-on-change module has the following features:

- Interrupt-on-Change enable (Master Switch)
- Individual pin configuration
- Rising and falling edge detection
- Individual pin interrupt flags

Figure 17-1 is a block diagram of the IOC module.

17.1 Enabling the Module

To allow individual pins to generate an interrupt, the IOCIE bit of the PIE0 register must be set. If the IOCIE bit is disabled, the edge detection on the pin will still occur, but an interrupt will not be generated.

17.2 Individual Pin Configuration

For each pin, a rising edge detector and a falling edge detector are present. To enable a pin to detect a rising edge, the associated bit of the IOCxP register is set. To enable a pin to detect a falling edge, the associated bit of the IOCxN register is set.

A pin can be configured to detect rising and falling edges simultaneously by setting the associated bits in both of the IOCxP and IOCxN registers.

17.3 Interrupt Flags

The bits located in the IOCxF registers are status flags that correspond to the interrupt-on-change pins of each port. If an expected edge is detected on an appropriately enabled pin, then the status flag for that pin will be set, and an interrupt will be generated if the IOCIE bit is set. The IOCIF bit of the PIR0 register reflects the status of all IOCxF bits.

17.4 Clearing Interrupt Flags

The individual status flags, (IOCxF register bits), can be cleared by resetting them to zero. If another edge is detected during this clearing operation, the associated status flag will be set at the end of the sequence, regardless of the value actually being written.

In order to ensure that no detected edge is lost while clearing flags, only AND operations masking out known changed bits should be performed. The following sequence is an example of what should be performed.

EXAMPLE 17-1: CLEARING INTERRUPT FLAGS (PORTB EXAMPLE)

```
MOVLW   0xff
XORWF   IOCBF, W
ANDWF   IOCBF, F
```

17.5 Operation in Sleep

The interrupt-on-change interrupt sequence will wake the device from Sleep mode, if the IOCIE bit is set.

If an edge is detected while in Sleep mode, the affected IOCxF register will be updated prior to the first instruction executed out of Sleep.

FIGURE 17-1: INTERRUPT-ON-CHANGE BLOCK DIAGRAM (PORTB EXAMPLE)

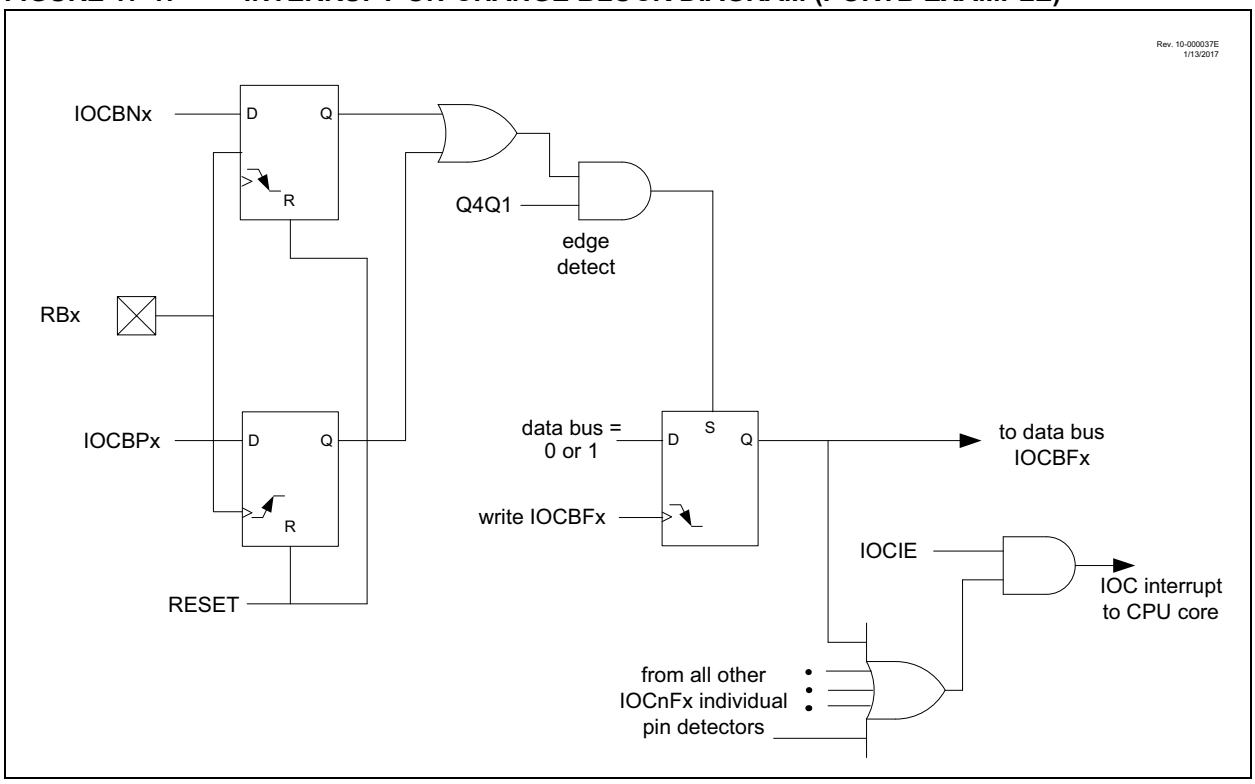

17.6 Register Definitions: Interrupt-on-Change Control

REGISTER 17-1: IOCAP: INTERRUPT-ON-CHANGE PORTA POSITIVE EDGE REGISTER

R/W-0/0	R/W-0/0	R/W-0/0	R/W-0/0	R/W-0/0	R/W-0/0	R/W-0/0	R/W-0/0
IOCAP7	IOCAP6	IOCAP5	IOCAP4	IOCAP3	IOCAP2	IOCAP1	IOCAP0
bit 7							bit 0

Legend:		
R = Readable bit	W = Writable bit	U = Unimplemented bit, read as ‘0’
u = Bit is unchanged	x = Bit is unknown	-n/n = Value at POR and BOR/Value at all other Resets
‘1’ = Bit is set	‘0’ = Bit is cleared	

bit 7-0 **IOCAP<7:0>:** Interrupt-on-Change PORTA Positive Edge Enable bits
1 = Interrupt-on-Change enabled on the pin for a positive-going edge. IOCAFx bit and IOCIF flag will be set upon detecting an edge.
0 = Interrupt-on-Change disabled for the associated pin.

REGISTER 17-2: IOCAN: INTERRUPT-ON-CHANGE PORTA NEGATIVE EDGE REGISTER

R/W-0/0	R/W-0/0	R/W-0/0	R/W-0/0	R/W-0/0	R/W-0/0	R/W-0/0	R/W-0/0
IOCAN7	IOCAN6	IOCAN5	IOCAN4	IOCAN3	IOCAN2	IOCAN1	IOCAN0
bit 7							bit 0

Legend:		
R = Readable bit	W = Writable bit	U = Unimplemented bit, read as ‘0’
u = Bit is unchanged	x = Bit is unknown	-n/n = Value at POR and BOR/Value at all other Resets
‘1’ = Bit is set	‘0’ = Bit is cleared	

bit 7-0 **IOCAN<7:0>:** Interrupt-on-Change PORTA Negative Edge Enable bits
1 = Interrupt-on-Change enabled on the pin for a negative-going edge. IOCAFx bit and IOCIF flag will be set upon detecting an edge.
0 = Interrupt-on-Change disabled for the associated pin.

REGISTER 17-3: IOCAF: INTERRUPT-ON-CHANGE PORTA FLAG REGISTER

R/W/HS-0/0	R/W/HS-0/0	R/W/HS-0/0	R/W/HS-0/0	R/W/HS-0/0	R/W/HS-0/0	R/W/HS-0/0	R/W/HS-0/0
IOCAF7	IOCAF6	IOCAF5	IOCAF4	IOCAF3	IOCAF2	IOCAF1	IOCAF0
bit 7							bit 0

Legend:		
R = Readable bit	W = Writable bit	U = Unimplemented bit, read as ‘0’
u = Bit is unchanged	x = Bit is unknown	-n/n = Value at POR and BOR/Value at all other Resets
‘1’ = Bit is set	‘0’ = Bit is cleared	HS - Bit is set in hardware

bit 7-0 **IOCAF<7:0>:** Interrupt-on-Change PORTA Flag bits
1 = An enabled change was detected on the associated pin.
Set when IOCAPx = 1 and a rising edge was detected on RAx, or when IOCANx = 1 and a falling edge was detected on RAx.
0 = No change was detected, or the user cleared the detected change.

REGISTER 17-4: IOCBP: INTERRUPT-ON-CHANGE PORTB POSITIVE EDGE REGISTER

R/W-0/0	R/W-0/0	R/W-0/0	R/W-0/0	R/W-0/0	R/W-0/0	R/W-0/0	R/W-0/0
IOCBP7	IOCBP6	IOCBP5	IOCBP4	IOCBP3	IOCBP2	IOCBP1	IOCBP0
bit 7							bit 0

Legend:		
R = Readable bit	W = Writable bit	U = Unimplemented bit, read as ‘0’
u = Bit is unchanged	x = Bit is unknown	-n/n = Value at POR and BOR/Value at all other Resets
‘1’ = Bit is set	‘0’ = Bit is cleared	

bit 7-0 **IOCBP<7:0>:** Interrupt-on-Change PORTB Positive Edge Enable bits
1 = Interrupt-on-Change enabled on the pin for a positive-going edge. IOCBFx bit and IOCIF flag will be set upon detecting an edge.
0 = Interrupt-on-Change disabled for the associated pin

REGISTER 17-5: IOCBN: INTERRUPT-ON-CHANGE PORTB NEGATIVE EDGE REGISTER

R/W-0/0	R/W-0/0	R/W-0/0	R/W-0/0	R/W-0/0	R/W-0/0	R/W-0/0	R/W-0/0
IOCBN7	IOCBN6	IOCBN5	IOCBN4	IOCBN3	IOCBN2	IOCBN1	IOCBN0
bit 7							bit 0

Legend:		
R = Readable bit	W = Writable bit	U = Unimplemented bit, read as ‘0’
u = Bit is unchanged	x = Bit is unknown	-n/n = Value at POR and BOR/Value at all other Resets
‘1’ = Bit is set	‘0’ = Bit is cleared	

bit 7-0 **IOCBN<7:0>:** Interrupt-on-Change PORTB Negative Edge Enable bits
1 = Interrupt-on-Change enabled on the pin for a negative-going edge. IOCBFx bit and IOCIF flag will be set upon detecting an edge.
0 = Interrupt-on-Change disabled for the associated pin

REGISTER 17-6: IOCBF: INTERRUPT-ON-CHANGE PORTB FLAG REGISTER

R/W/HS-0/0	R/W/HS-0/0	R/W/HS-0/0	R/W/HS-0/0	R/W/HS-0/0	R/W/HS-0/0	R/W/HS-0/0	R/W/HS-0/0
IOCBF7	IOCBF6	IOCBF5	IOCBF4	IOCBF3	IOCBF2	IOCBF1	IOCBF0
bit 7							bit 0

Legend:		
R = Readable bit	W = Writable bit	U = Unimplemented bit, read as ‘0’
u = Bit is unchanged	x = Bit is unknown	-n/n = Value at POR and BOR/Value at all other Resets
‘1’ = Bit is set	‘0’ = Bit is cleared	HS - Bit is set in hardware

bit 7-0 **IOCBF<7:0>:** Interrupt-on-Change PORTB Flag bits
1 = An enabled change was detected on the associated pin
Set when IOCBPx = 1 and a rising edge was detected on RBx, or when IOCBNx = 1 and a falling edge was detected on RBx.
0 = No change was detected, or the user cleared the detected change

REGISTER 17-7: IOCCP: INTERRUPT-ON-CHANGE PORTC POSITIVE EDGE REGISTER

R/W-0/0	R/W-0/0	U-0	R/W-0/0	R/W-0/0	R/W-0/0	R/W-0/0	R/W-0/0
IOCCP7	IOCCP6	—	IOCCP4	IOCCP3	IOCCP2	IOCCP1	IOCCP0
bit 7							bit 0

Legend:		
R = Readable bit	W = Writable bit	U = Unimplemented bit, read as ‘0’
u = Bit is unchanged	x = Bit is unknown	-n/n = Value at POR and BOR/Value at all other Resets
‘1’ = Bit is set	‘0’ = Bit is cleared	

bit 7-6 **IOCCP<7:6>:** Interrupt-on-Change PORTC Positive Edge Enable bits
1 = Interrupt-on-Change enabled on the pin for a positive-going edge. IOCCFx bit and IOCIF flag will be set upon detecting an edge.
0 = Interrupt-on-Change disabled for the associated pin

bit 5 **Unimplemented:** Read as ‘0’

bit 4-0 **IOCCP<4:0>:** Interrupt-on-Change PORTC Positive Edge Enable bits
1 = Interrupt-on-Change enabled on the pin for a positive-going edge. IOCCFx bit and IOCIF flag will be set upon detecting an edge.
0 = Interrupt-on-Change disabled for the associated pin

REGISTER 17-8: IOCCN: INTERRUPT-ON-CHANGE PORTC NEGATIVE EDGE REGISTER

R/W-0/0	R/W-0/0	U-0	R/W-0/0	R/W-0/0	R/W-0/0	R/W-0/0	R/W-0/0
IOCCN7	IOCCN6	—	IOCCN4	IOCCN3	IOCCN2	IOCCN1	IOCCN0
bit 7							bit 0

Legend:		
R = Readable bit	W = Writable bit	U = Unimplemented bit, read as ‘0’
u = Bit is unchanged	x = Bit is unknown	-n/n = Value at POR and BOR/Value at all other Resets
‘1’ = Bit is set	‘0’ = Bit is cleared	

bit 7-6 **IOCCN<7:6>:** Interrupt-on-Change PORTC Negative Edge Enable bits
1 = Interrupt-on-Change enabled on the pin for a negative-going edge. IOCCFx bit and IOCIF flag will be set upon detecting an edge.
0 = Interrupt-on-Change disabled for the associated pin

bit 5 **Unimplemented:** Read as ‘0’

bit 4-0 **IOCCN<4:0>:** Interrupt-on-Change PORTC Negative Edge Enable bits
1 = Interrupt-on-Change enabled on the pin for a negative-going edge. IOCCFx bit and IOCIF flag will be set upon detecting an edge.
0 = Interrupt-on-Change disabled for the associated pin

REGISTER 17-9: IOCCF: INTERRUPT-ON-CHANGE PORTC FLAG REGISTER

R/W/HS-0/0	R/W/HS-0/0	U-0	R/W/HS-0/0	R/W/HS-0/0	R/W/HS-0/0	R/W/HS-0/0	R/W/HS-0/0
IOCCF7	IOCCF6	—	IOCCF4	IOCCF3	IOCCF2	IOCCF1	IOCCF0
bit 7							bit 0

Legend:		
R = Readable bit	W = Writable bit	U = Unimplemented bit, read as ‘0’
u = Bit is unchanged	x = Bit is unknown	-n/n = Value at POR and BOR/Value at all other Resets
‘1’ = Bit is set	‘0’ = Bit is cleared	HS - Bit is set in hardware

bit 7-6 **IOCCF<7:6>:** Interrupt-on-Change PORTC Flag bits
1 = An enabled change was detected on the associated pin
Set when IOCCPx = 1 and a rising edge was detected on RCx, or when IOCCNx = 1 and a falling edge was detected on RCx.
0 = No change was detected, or the user cleared the detected change

bit 5 **Unimplemented:** Read as ‘0’

bit 4-0 **IOCCF<4:0>:** Interrupt-on-Change PORTC Flag bits
1 = An enabled change was detected on the associated pin
Set when IOCCPx = 1 and a rising edge was detected on RCx, or when IOCCNx = 1 and a falling edge was detected on RCx.
0 = No change was detected, or the user cleared the detected change

REGISTER 17-10: IOCEP: INTERRUPT-ON-CHANGE PORTE POSITIVE EDGE REGISTER

U-0	U-0	U-0	U-0	R/W/HS-0/0	U-0	U-0	U-0
—	—	—	—	IOCEP3(1)	—	—	—
bit 7							bit 0

Legend:		
R = Readable bit	W = Writable bit	U = Unimplemented bit, read as ‘0’
u = Bit is unchanged	x = Bit is unknown	-n/n = Value at POR and BOR/Value at all other Resets
‘1’ = Bit is set	‘0’ = Bit is cleared	HS - Bit is set in hardware

bit 7-4 **Unimplemented:** Read as ‘0’

bit 3 **IOCEP3:** Interrupt-on-Change PORTE Positive Edge Enable bit
1 = Interrupt-on-Change enabled on the pin for a positive-going edge. IOCEFx bit and IOCIF flag will be set upon detecting an edge.
0 = Interrupt-on-Change disabled for the associated pin

bit 2-0 **Unimplemented:** Read as ‘0’

Note 1: If MCLRE = 1 or LVP = 1, RC port functionality is disabled and IOC is not available on RE3.

REGISTER 17-11: IOCEN: INTERRUPT-ON-CHANGE PORTE NEGATIVE EDGE REGISTER

U-0	U-0	U-0	U-0	R/W/HS-0/0	U-0	U-0	U-0
—	—	—	—	IOCEN3[(1)]	—	—	—
bit 7							bit 0

Legend:		
R = Readable bit	W = Writable bit	U = Unimplemented bit, read as ‘0’
u = Bit is unchanged	x = Bit is unknown	-n/n = Value at POR and BOR/Value at all other Resets
‘1’ = Bit is set	‘0’ = Bit is cleared	HS - Bit is set in hardware

bit 7-4 **Unimplemented:** Read as ‘0’

bit 3 **IOCEN3:** Interrupt-on-Change PORTE Negative Edge Enable bit
1 = Interrupt-on-Change enabled on the pin for a negative-going edge. IOCEFx bit and IOCIF flag will be set upon detecting an edge.
0 = Interrupt-on-Change disabled for the associated pin

bit 2-0 **Unimplemented:** Read as ‘0’

Note 1: If MCLRE = 1 or LVP = 1, RE3 port functionality is disabled and IOC is not available on RE3.

REGISTER 17-12: IOCEF: INTERRUPT-ON-CHANGE PORTE FLAG REGISTER

U-0	U-0	U-0	U-0	R/W/HS-0/0	U-0	U-0	U-0
—	—	—	—	IOCEF3	—	—	—
bit 7							bit 0

Legend:		
R = Readable bit	W = Writable bit	U = Unimplemented bit, read as ‘0’
u = Bit is unchanged	x = Bit is unknown	-n/n = Value at POR and BOR/Value at all other Resets
‘1’ = Bit is set	‘0’ = Bit is cleared	HS - Bit is set in hardware

bit 7-4 **Unimplemented:** Read as ‘0’

bit 3 **IOCEF3:** Interrupt-on-Change PORTE Flag bit
1 = An enabled change was detected on the associated pin
Set when IOCEPx = 1 and a rising edge was detected on REx, or when IOCENx = 1 and a falling edge was detected on REx.
0 = No change was detected, or the user cleared the detected change

bit 2-0 **Unimplemented:** Read as ‘0’

TABLE 17-1: SUMMARY OF REGISTERS ASSOCIATED WITH INTERRUPT-ON-CHANGE

Name	Bit 7	Bit 6	Bit 5	Bit 4	Bit 3	Bit 2	Bit 1	Bit 0	Register on Page
INTCON	GIE	PEIE	—	—	—	—	—	INTEDG	164
PIE0	—	—	TMR0IE	IOCIE	—	—	—	INTE	165
IOCAP	IOCAP7	IOCAP6	IOCAP5	IOCAP4	IOCAP3	IOCAP2	IOCAP1	IOCAP0	277
IOCAN	IOCAN7	IOCAN6	IOCAN5	IOCAN4	IOCAN3	IOCAN2	IOCAN1	IOCAN0	277
IOCAF	IOCAF7	IOCAF6	IOCAF5	IOCAF4	IOCAF3	IOCAF2	IOCAF1	IOCAF0	277
IOCBP	IOCBP7	IOCBP6	IOCBP5	IOCBP4	IOCBP3	IOCBP2	IOCBP1	IOCBP0	278
IOCBN	IOCBN7	IOCBN6	IOCBN5	IOCBN4	IOCBN3	IOCBN2	IOCBN1	IOCBN0	278
IOCBF	IOCBF7	IOCBF6	IOCBF5	IOCBF4	IOCBF3	IOCBF2	IOCBF1	IOCBF0	278
IOCCP	IOCCP7	IOCCP6	—	IOCCP4	IOCCP3	IOCCP2	IOCCP1	IOCCP0	279
IOCCN	IOCCN7	IOCCN6	—	IOCCN4	IOCCN3	IOCCN2	IOCCN1	IOCCN0	279
IOCCF	IOCCF7	IOCCF6	—	IOCCF4	IOCCF3	IOCCF2	IOCCF1	IOCCF0	280
IOCEP	—	—	—	—	IOCEP3(2)	—	—	—	280
IOCEN	—	—	—	—	IOCEN3(2)	—	—	—	281
IOCEF	—	—	—	—	IOCEF3(2)	—	—	—	281

Note 1: — = unimplemented location, read as '0'. Shaded cells are not used by interrupt-on-change.

2: If MCLRE = 1 or LVP = 1, RE3 port functionality is disabled and IOC on RE3 is not available.

18.0 FIXED VOLTAGE REFERENCE (FVR)

The Fixed Voltage Reference, or FVR, is a stable voltage reference, independent of VDD, with 1.024V, 2.048V or 4.096V selectable output levels. An output of 3.072V is also available as a voltage source to drive the LCD segments. The output of the FVR can be configured to supply a reference voltage to the following:

- ADC input channel
- ADC positive reference
- Comparator positive and negative input
- 5-Bit Digital-to-Analog Converter (DAC1)
- LCD Voltage Source to drive the LCD segments

The FVR can be enabled by setting the FVREN bit of the FVRCON register.

Note:	Fixed Voltage Reference output cannot exceed VDD.

18.1 Independent Gain Amplifiers

The output of the FVR, which is connected to the ADC, comparators, and DAC, is routed through two independent programmable gain amplifiers. Each amplifier can be programmed for a gain of 1x, 2x or 4x, to produce the three possible voltage levels. In addition, a 3x mode is also available to run the LCD module. The user must set the FVREN bit of the FVRCON register along with setting the LCD, LCDVSRC<3:0> of the LCDVCON2 register to `0b0011`.

The ADFVR<1:0> bits of the FVRCON register are used to enable and configure the gain amplifier settings for the reference supplied to the ADC module. Reference **Section 19.0 "Analog-to-Digital Converter with Computation (ADC2) Module"** for additional information.

The CDAFVR<1:0> bits of the FVRCON register are used to enable and configure the gain amplifier settings for the reference supplied to the DAC and comparator module. Reference **Section 21.0 "5-Bit Digital-to-Analog Converter (DAC1) Module"** and **Section 22.0 "Comparator Module"** for additional information.

18.2 FVR Stabilization Period

When the Fixed Voltage Reference module is enabled, it requires time for the reference and amplifier circuits to stabilize.

FVRRDY is an indicator of the reference being ready. If an LF device, or the BOR enabled then FVRRDY will be high prior to setting FVREN as those module require the reference voltage.

FIGURE 18-1: VOLTAGE REFERENCE BLOCK DIAGRAM

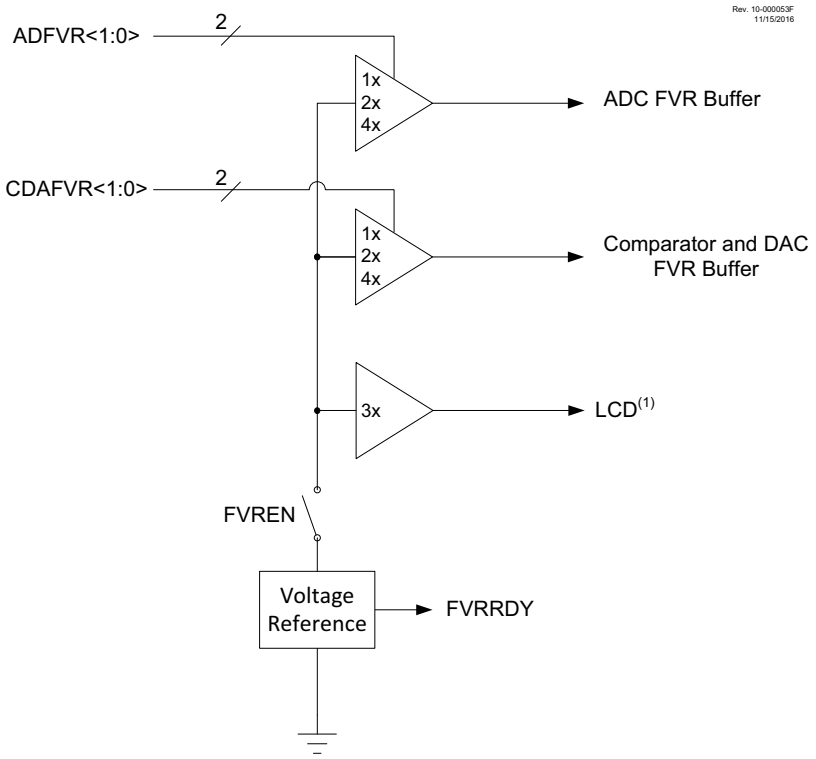

Note 1: To enable the 3x Buffer to the LCD module, the LCDVSRC<3:0> of the LCDVCON2 register need to be set to `0b0011`.

18.3 Register Definitions: FVR Control

REGISTER 18-1: FVRCON: FIXED VOLTAGE REFERENCE CONTROL REGISTER

R/W-0/0	R-q/q	R/W-0/0	R/W-0/0	R/W-0/0	R/W-0/0	R/W-0/0	R/W-0/0
FVREN	FVRRDY(1)	TSEN(3)	TSRNG(3)	CDAFVR<1:0>		ADFVR<1:0>	
bit 7							bit 0

Legend:		
R = Readable bit	W = Writable bit	U = Unimplemented bit, read as ‘0’
u = Bit is unchanged	x = Bit is unknown	-n/n = Value at POR and BOR/Value at all other Resets
‘1’ = Bit is set	‘0’ = Bit is cleared	q = Value depends on condition

bit 7 **FVREN:** Fixed Voltage Reference Enable bit(4)
`1` = Fixed Voltage Reference is enabled(4)
`0` = Fixed Voltage Reference is disabled

bit 6 **FVRRDY:** Fixed Voltage Reference Ready Flag bit(1)
`1` = Fixed Voltage Reference output is ready for use
`0` = Fixed Voltage Reference output is not ready or not enabled

bit 5 **TSEN:** Temperature Indicator Enable bit(3)
`1` = Temperature Indicator is enabled
`0` = Temperature Indicator is disabled

bit 4 **TSRNG:** Temperature Indicator Range Selection bit(3)
`1` = Temperature in High Range
`0` = Temperature in Low Range

bit 3-2 **CDAFVR<1:0>:** Comparator FVR Buffer Gain Selection bits
`11` = Comparator FVR Buffer Gain is 4x, (4.096V)(2)
`10` = Comparator FVR Buffer Gain is 2x, (2.048V)(2)
`01` = Comparator FVR Buffer Gain is 1x, (1.024V)
`00` = Comparator FVR Buffer is off

bit 1-0 **ADFVR<1:0>:** ADC FVR Buffer Gain Selection bit
`11` = ADC FVR Buffer Gain is 4x, (4.096V)(2)
`10` = ADC FVR Buffer Gain is 2x, (2.048V)(2)
`01` = ADC FVR Buffer Gain is 1x, (1.024V)
`00` = ADC FVR Buffer is off

Note 1: FVRRDY is always ‘`1`’ for PIC16(L)F19155/56/75/76/85/86 devices only.
2: Fixed Voltage Reference output cannot exceed V_{DD}.
3: See **Section 20.0 “Temperature Indicator Module (TIM)”** for additional information.
4: Enables the 3x buffer for the LCD module.

TABLE 18-1: SUMMARY OF REGISTERS ASSOCIATED WITH FIXED VOLTAGE REFERENCE

Name	Bit 7	Bit 6	Bit 5	Bit 4	Bit 3	Bit 2	Bit 1	Bit 0	Register on page
FVRCON	FVREN	FVRRDY	TSEN	TSRNG	CDAFVR<1:0>		ADFVR<1:0>		285
ADCON0	ON	CONT	—	CS	—	FM	—	GO	306
ADCON1	PPOL	IPEN	GPOL	—	—	—	—	DSEN	307
DAC1CON0	DAC1EN	—	DAC1OE1	DAC1OE2	DAC1PSS<1:0>		—	—	333

Legend: – = unimplemented locations read as '0'. Shaded cells are not used with the Fixed Voltage Reference.

19.0 ANALOG-TO-DIGITAL CONVERTER WITH COMPUTATION (ADC^2) MODULE

The Analog-to-Digital Converter with Computation (ADC^2) allows conversion of an analog input signal to a 12-bit binary representation of that signal. This device uses analog inputs, which are multiplexed into a single sample and hold circuit. The output of the sample and hold is connected to the input of the converter. The converter generates a 12-bit binary result via successive approximation and stores the conversion result into the ADC result registers (ADRESH:ADRESL register pair).

Additionally, the following features are provided within the ADC module:

- 13-bit Acquisition Timer
- Hardware Capacitive Voltage Divider (CVD) Support:
  - 13-bit Precharge Timer
  - Adjustable sample and hold capacitor array
  - Guard ring digital output drive
- Automatic Repeat and Sequencing:
  - Automated double sample conversion for CVD
  - Two sets of result registers (Result and Previous result)
  - Auto-conversion trigger
  - Internal retrigger
- Computation Features:
  - Averaging and Low-Pass Filter functions
  - Reference Comparison
  - 2-level Threshold Comparison
  - Selectable Interrupts

Figure 19-1 shows the block diagram of the ADC.

The ADC voltage reference is software selectable to be either internally generated or externally supplied.

The ADC can generate an interrupt upon completion of a conversion and upon threshold comparison. These interrupts can be used to wake-up the device from Sleep.

FIGURE 19-1: ADC² BLOCK DIAGRAM

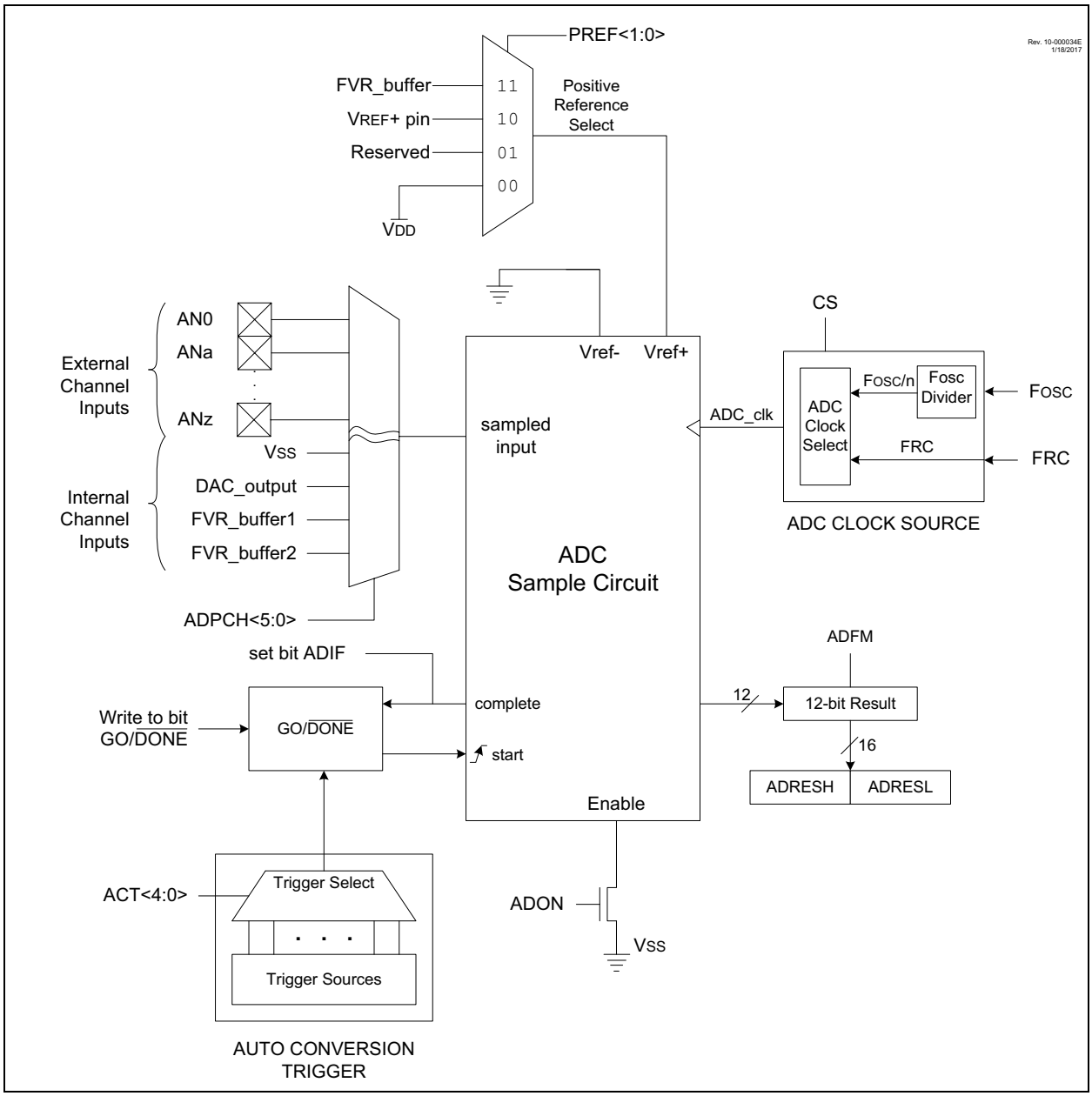

19.1 ADC Configuration

When configuring and using the ADC the following functions must be considered:

- Port Configuration
- Channel Selection
- ADC Voltage Reference Selection
- ADC Conversion Clock Source
- Interrupt Control
- Result Formatting
- Conversion Trigger Selection
- ADC Acquisition Time
- ADC Precharge Time
- Additional Sample and Hold Capacitor
- Single/Double Sample Conversion
- Guard Ring Outputs

19.1.1 PORT CONFIGURATION

The ADC can be used to convert both analog and digital signals. When converting analog signals, the I/O pin should be configured for analog by setting the associated TRIS and ANSEL bits. Refer to **Section 14.0 "I/O Ports"** for more information.

Note:	Analog voltages on any pin that is defined as a digital input may cause the input buffer to conduct excess current.

19.1.2 CHANNEL SELECTION

There are several channel selections available:

- Seven PORTA pins
- Eight PORTB pins
- Eight PORTD pins
- Temperature Indicator
- Four PORTE pins
- Eight PORTF pins
- VLCD3 Voltage divided by 4
- V_{BAT} Voltage divided by 3
- DAC output
- Fixed Voltage Reference (FVR)
- V_{SS} (ground)

The ADPCH register determines which channel is connected to the sample and hold circuit.

When changing channels, a delay is required before starting the next conversion.

Refer to **Section 19.2 "ADC Operation"** for more information.

Note:	When switching to the FVR Input channel on the ADC or ADC^2, from a channel that is of a higher voltage than the FVR, certain PMOS gates will turn on and feed current back into other networks that are also supported by the FVR reference voltage. Until the sample and hold capacitor of the ADC discharges to the new lower voltage level, the PMOS circuits will remain on and the circuits supported by the FVR will experience problems. Some of affects include; the BOR will trigger at a higher voltage, the internal oscillators will experience frequency changes, and the FVR input to the comparator circuit will be a higher than expected voltage.

19.1.3 ADC VOLTAGE REFERENCE

The PREF<1:0> bits of the ADREF register provide control of the positive voltage reference (V_{REF}+). The positive voltage reference can be:

- V_{REF}+ pin
- V_{DD}
- FVR outputs

The negative voltage reference (V_{REF}-) source is:

- V_{SS}

See **Section 18.0 "Fixed Voltage Reference (FVR)"** for more details on the Fixed Voltage Reference.

19.1.4 CONVERSION CLOCK

The source of the conversion clock is software selectable via the ADCLK register and the CS bits of the ADCON0 register. If F_{OSC} is selected as the ADC clock, there is a prescaler available to divide the clock so that it meets the ADC clock period specification. The ADC clock source options are the following:

- F_{OSC}/(2*n)(where n is from 1 to 128)
- FRC (dedicated RC oscillator)

The time to complete one bit conversion is defined as T_{AD}. Refer to Figure 19-2 for the complete timing details of the ADC conversion.

For correct conversion, the appropriate T_{AD} specification must be met. Refer to Table 39-13 for more information. Table 19-1 gives examples of appropriate ADC clock selections.

Note 1:	Unless using the FRC, any changes in the system clock frequency will change the ADC clock frequency, which may adversely affect the ADC result.
2:	The internal control logic of the ADC runs off of the clock selected by the CS bit of ADCON0. What this can mean is when the CS bit of ADCON0 is set to '1' (ADC runs on FRC), there may be unexpected delays in operation when setting ADC control bits.

TABLE 19-1: ADC CLOCK PERIOD (TAD) VS. DEVICE OPERATING FREQUENCIES(1,4)

ADC Clock Period (TAD)		Device Frequency (FOSC)					
ADC Clock Source	CS<5:0>	32 MHz	20 MHz	16 MHz	8 MHz	4 MHz	1 MHz
FOSC/2	000000	62.5 ns(2)	100 ns(2)	125 ns(2)	250 ns(2)	500 ns(2)	2.0 µs
FOSC/4	000001	125 ns(2)	200 ns(2)	250 ns(2)	500 ns(2)	1.0 µs	4.0 µs
FOSC/6	000010	187.5 ns(2)	300 ns(2)	375 ns(2)	750 ns(2)	1.5 µs	6.0 µs
FOSC/8	000011	250 ns(2)	400 ns(2)	500 ns(2)	1.0 µs	2.0 µs	8.0 µs
...	...	...	...	...	...	...	...
FOSC/16	000111	500 ns(2)	800 ns(2)	1.0 µs	2.0 µs	4.0 µs	16.0 µs(3)
...	...	...	...	...	...	...	...
FOSC/128	111111	4.0 µs	6.4 µs	8.0 µs	16.0 µs(3)	32.0 µs(2)	128.0 µs(2)
FRC	CS(ADCON0<4>) = 1	1.0-6.0 µs	1.0-6.0 µs	1.0-6.0 µs	1.0-6.0 µs	1.0-6.0 µs	1.0-6.0 µs

Legend: Shaded cells are outside of recommended range.

Note 1: See TAD parameter for FRC source typical TAD value.

2: These values violate the required TAD time.

3: Outside the recommended TAD time.

4: The ADC clock period (TAD) and total ADC conversion time can be minimized when the ADC clock is derived from the system clock FOSC. However, the FRC oscillator source must be used when conversions are to be performed with the device in Sleep mode.

FIGURE 19-2: ANALOG-TO-DIGITAL CONVERSION TAD CYCLES

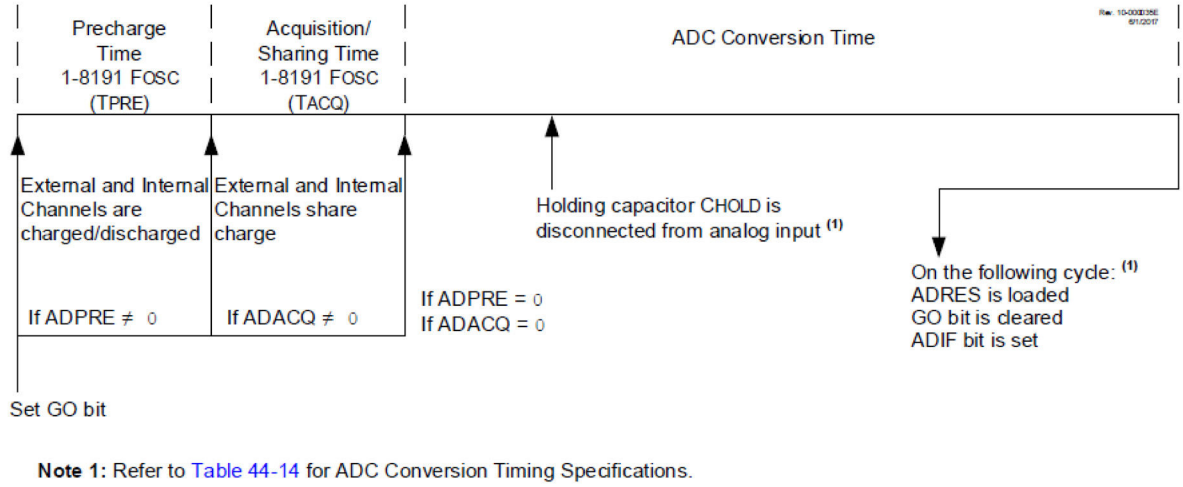

Note 1: Refer to Table 44-14 for ADC Conversion Timing Specifications.

19.1.5 INTERRUPTS

The ADC module allows the ability to generate an interrupt upon completion of an Analog-to-Digital conversion. The ADC Interrupt Flag is the ADIF bit in the PIR1 register. The ADC Interrupt Enable is the ADIE bit in the PIE1 register. The ADIF bit must be cleared in software.

> **Note 1:** The ADIF bit is set at the completion of every conversion, regardless of whether or not the ADC interrupt is enabled.
>
> **2:** The ADC operates during Sleep only when the FRC oscillator is selected.

This interrupt can be generated while the device is operating or while in Sleep. If the device is in Sleep, the interrupt will wake-up the device. Upon waking from Sleep, the next instruction following the SLEEP instruction is always executed. If the user is attempting to wake-up from Sleep and resume in-line code execution, the ADIE bit of the PIEx register and the PEIE bit of the INTCON register must both be set and the GIE bit of the INTCON register must be cleared. If all these bits are set, the PC will jump to the Interrupt Service Routine.

19.1.6 RESULT FORMATTING

The 12-bit ADC conversion result can be supplied in two formats, left justified or right justified. The FM bits of the ADCON0 register controls the output format.

Figure 19-3 shows the two output formats.

Writes to the ADRES register pair are always right justified regardless of the selected format mode. Therefore, data read after writing to ADRES when ADFRM0 = 0 will be shifted left four places.

FIGURE 19-3: 12-BIT ADC CONVERSION RESULT FORMAT

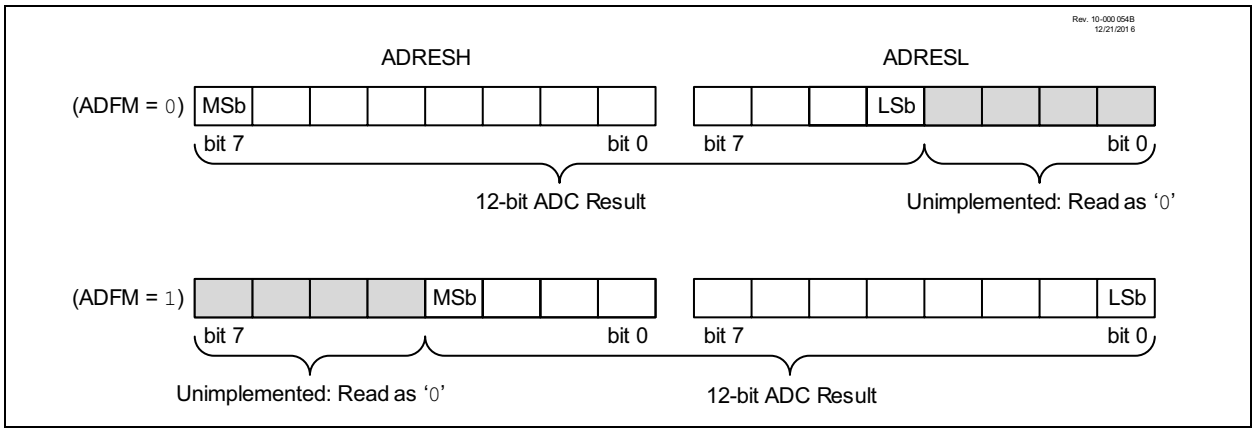

19.2 ADC Operation

19.2.1 STARTING A CONVERSION

To enable the ADC module, the ON bit of the ADCON0 register must be set to a '1'. A conversion may be started by any of the following:

- Software setting the GO bit of ADCON0 to '1'
- An external trigger (selected by Register 19-3)
- A continuous-mode retrigger (see section **Section 19.5.8 "Continuous Sampling mode"**)

Note:	The GO bit should not be set in the same instruction that turns on the ADC. Refer to **Section 19.2.6 "ADC Conversion Procedure (Basic Mode)"**.

19.2.2 COMPLETION OF A CONVERSION

When any individual conversion is complete, the value already in ADRES is written into PREV (if ADPSIS = 1) and the new conversion results appear in ADRES. When the conversion completes, the ADC module will:

- Clear the GO bit (unless the CONT bit of ADCON0 is set)
- Set the ADIF Interrupt Flag bit
- Set the ADMATH bit
- Update ACC

When ADDSEN = 0 then after every conversion, or when ADDSEN = 1 then after every other conversion, the following events occur:

- ERR is calculated
- ADTIF is set if ERR calculation meets threshold comparison

Importantly, filter and threshold computations occur after the conversion itself is complete. As such, interrupt handlers responding to ADIF should check ADTIF before reading filter and threshold results.

Note:	A device Reset forces all registers to their Reset state. Thus, the ADC module is turned off and any pending conversion is terminated.

19.2.3 ADC OPERATION DURING SLEEP

The ADC module can operate during Sleep. This requires the ADC clock source to be set to the ADCRC option. When the ADCRC oscillator source is selected, the ADC waits one additional instruction before starting the conversion. This allows the SLEEP instruction to be executed, which can reduce system noise during the conversion. If the ADC interrupt is enabled, the device will wake-up from Sleep when the conversion completes. If the ADC interrupt is disabled, the ADC module is turned off after the conversion completes, although the ON bit remains set.

19.2.4 EXTERNAL TRIGGER DURING SLEEP

If the external trigger is received during sleep while ADC clock source is set to the FRC, ADC module will perform the conversion and set the ADIF bit upon completion.

If an external trigger is received when the ADC clock source is something other than FRC, the trigger will be recorded, but the conversion will not begin until the device exits Sleep.

19.2.5 AUTO-CONVERSION TRIGGER

The Auto-conversion Trigger allows periodic ADC measurements without software intervention. When a rising edge of the selected source occurs, the GO bit is set by hardware.

The Auto-conversion Trigger source is selected by the ADACT register.

Using the Auto-conversion Trigger does not assure proper ADC timing. It is the user's responsibility to ensure that the ADC timing requirements are met. See Register 19-33 for auto-conversion sources.

19.2.6 ADC CONVERSION PROCEDURE (BASIC MODE)

This is an example procedure for using the ADC to perform an Analog-to-Digital conversion:

1. Configure Port:
   - Disable pin output driver (Refer to the TRISx register)
   - Configure pin as analog (Refer to the ANSELx register)
2. Configure the ADC module:
   - Select ADC conversion clock
   - Select voltage reference
   - Select ADC input channel
   - Precharge and acquisition
   - Turn on ADC module
3. Configure ADC interrupt (optional):
   - Clear ADC interrupt flag
   - Enable ADC interrupt
   - Enable global interrupt (GIE bit)(1)
4. If ADACQ = 0, software must wait the required acquisition time(2).
5. Start conversion by setting the GO bit.
6. Wait for ADC conversion to complete by one of the following:
   - Polling the GO bit
   - Polling the ADIF bit
   - Waiting for the ADC interrupt (interrupts enabled)
7. Read ADC Result.
8. Clear the ADC interrupt flag (required if interrupt is enabled).

Note 1: The global interrupt can be disabled if the user is attempting to wake-up from Sleep and resume in-line code execution.

2: Refer to **Section 19.3 "ADC Acquisition Requirements"**.

19.3 ADC Acquisition Requirements

For the ADC to meet its specified accuracy, the charge holding capacitor (CHOLD) must be allowed to fully charge to the input channel voltage level. The Analog Input model is shown in Figure 19-4. The source impedance (RS) and the internal sampling switch (RSS) impedance directly affect the time required to charge the capacitor CHOLD. The sampling switch (RSS) impedance varies over the device voltage (VDD), refer to Figure 19-4. **The maximum recommended impedance for analog sources is 1 kΩ.** If the source impedance is decreased, the acquisition time may be decreased. After the analog input channel is selected (or changed), an ADC acquisition must be completed before the conversion can be started. To calculate the minimum acquisition time, Equation 19-1 may be used. This equation assumes that 1/2 LSb error is used (4,096 steps for the ADC). The 1/2 LSb error is the maximum error allowed for the ADC to meet its specified accuracy.

EQUATION 19-1: ACQUISITION TIME EXAMPLE

Assumptions: *Temperature = 50°C and external impedance of 1kΩ 5.0V VDD*

$$T_{ACQ} = \text{Amplifier Settling Time} + \text{Hold Capacitor Charging Time} + \text{Temperature Coefficient}$$
$$= T_{AMP} + T_C + T_{COFF}$$
$$= 2\mu s + T_C + [(\text{Temperature} - 25°C)(0.05\mu s/°C)]$$

The value for TC can be approximated with the following equations:

$$V_{APPLIED}\left(1 - \frac{1}{(2^{n+1}) - 1}\right) = V_{CHOLD}$$ *;[1] VCHOLD charged to within 1/2 lsb*

$$V_{APPLIED}\left(1 - e^{\frac{-T_C}{RC}}\right) = V_{CHOLD}$$ *;[2] VCHOLD charge response to VAPPLIED*

$$V_{APPLIED}\left(1 - e^{\frac{-T_C}{RC}}\right) = V_{APPLIED}\left(1 - \frac{1}{(2^{n+1}) - 1}\right)$$ *;combining [1] and [2]*

Note: Where n = number of bits of the ADC.

Solving for TC:

$$T_C = -C_{HOLD}(R_{IC} + R_{SS} + R_S)\ \ln(1/8191)$$
$$= -28\,pF(1k\Omega + 7k\Omega + 1k\Omega)\ \ln(0.0001221)$$
$$= 2.27\mu s$$

Therefore:

$$T_{ACQ} = 2\,\mu s + 2.27\mu s + [(50°C - 25°C)(0.05\mu s/°C)]$$
$$= 5.52\mu s$$

Note 1: The reference voltage (VREF) has no effect on the equation, since it cancels itself out.

2: The charge holding capacitor (CHOLD) is not discharged after each conversion.

3: The maximum recommended impedance for analog sources is 1kΩ. This is required to meet the pin leakage specification.

FIGURE 19-4: ANALOG INPUT MODEL

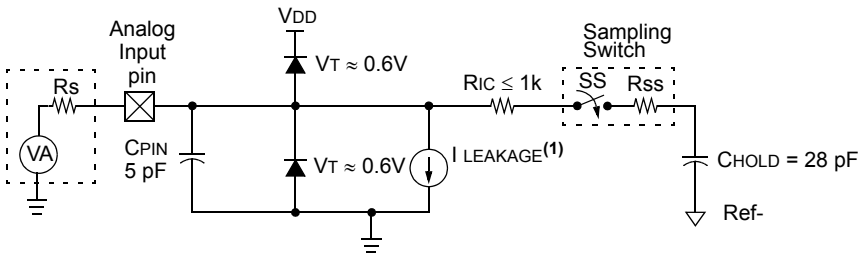

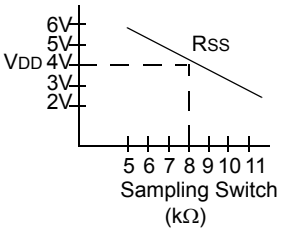

Legend:

CHOLD	= Sample/Hold Capacitance
CPIN	= Input Capacitance
I LEAKAGE	= Leakage current at the pin due to various junctions
RIC	= Interconnect Resistance
RSS	= Resistance of Sampling Switch
SS	= Sampling Switch
VT	= Threshold Voltage

Note 1: Refer to Table 39-4 (parameter D340 and D341).

FIGURE 19-5: ADC TRANSFER FUNCTION

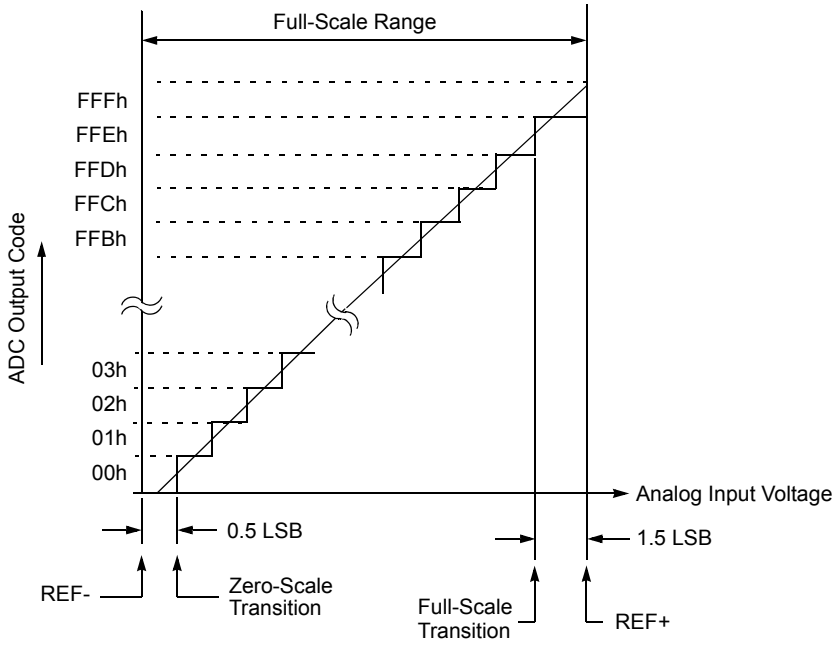

19.4 Capacitive Voltage Divider (CVD) Features

The ADC module contains several features that allow the user to perform a relative capacitance measurement on any ADC channel using the internal ADC sample and hold capacitance as a reference. This relative capacitance measurement can be used to implement capacitive touch or proximity sensing applications. Figure 19-6 shows the basic block diagram of the CVD portion of the ADC module.

FIGURE 19-6: HARDWARE CAPACITIVE VOLTAGE DIVIDER BLOCK DIAGRAM

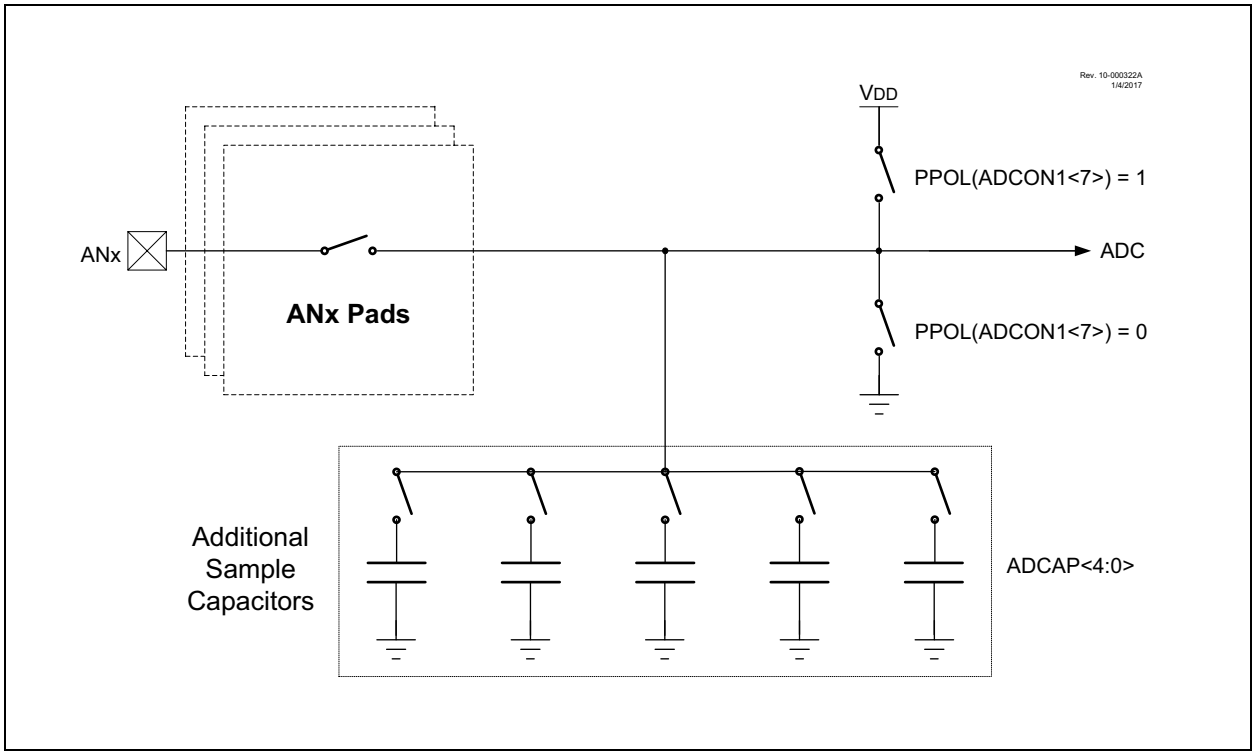

19.4.1 CVD OPERATION

A CVD operation begins with the ADC's internal sample and hold capacitor (C_{HOLD}) being disconnected from the path which connects it to the external capacitive sensor node. While disconnected, C_{HOLD} is precharged to VDD or VSS, while the path to the sensor node is precharged to the level opposite that of CHOLD. When the precharge phase is complete, the VDD/VSS precharge paths for the two nodes are shut off and CHOLD and the path to the external sensor node are re-connected, at which time the acquisition phase of the CVD operation begins. During acquisition, a capacitive voltage divider is formed between the precharged CHOLD and sensor nodes, which results in a final voltage level setting on CHOLD, which is determined by the capacitances and precharge levels of the two nodes. After acquisition, the ADC converts the voltage level on CHOLD. This process is then repeated with inverted precharge levels for both the CHOLD and external sensor nodes. Figure 19-7 shows the waveform for two inverted CVD measurements, which is known as differential CVD measurement.

FIGURE 19-7: DIFFERENTIAL CVD MEASUREMENT WAVEFORM

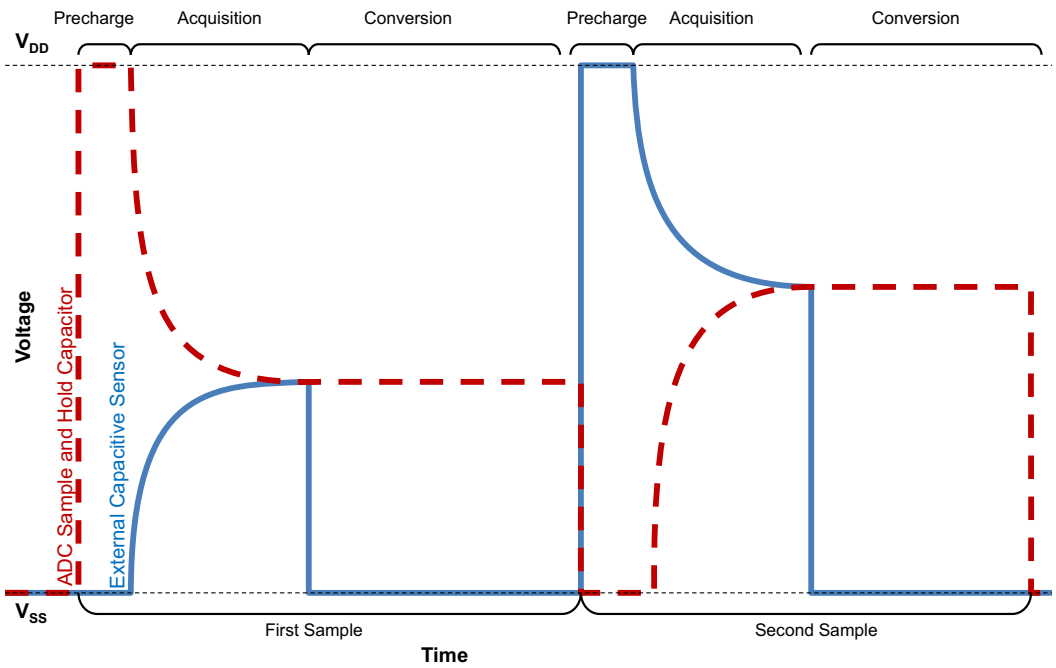

19.4.2 PRECHARGE CONTROL

The Precharge stage is an optional period of time that brings the external channel and internal sample and hold capacitor to known voltage levels. Precharge is enabled by writing a non-zero value to the PRE register. This stage is initiated when an ADC conversion begins, either from setting the GO bit, a special event trigger, or a conversion restart from the computation functionality. If the PRE register is cleared when an ADC conversion begins, this stage is skipped.

During the precharge time, CHOLD is disconnected from the outer portion of the sample path that leads to the external capacitive sensor and is connected to either VDD or VSS, depending on the value of the ADPPOL bit of ADCON1. At the same time, the port pin logic of the selected analog channel is overridden to drive a digital high or low out, in order to precharge the outer portion of the ADC's sample path, which includes the external sensor. The output polarity of this override is also determined by the ADPPOL bit of ADCON1. The amount of time that this charging receives is controlled by the PRE register.

Note 1:	The external charging overrides the TRIS setting of the respective I/O pin.
2:	If there is a device attached to this pin, Precharge should not be used.

19.4.3 ACQUISITION CONTROL

The Acquisition stage is an optional time for the voltage on the internal sample and hold capacitor to charge or discharge from the selected analog channel. This acquisition time is controlled by the ADACQ register. If PRE = 0, acquisition starts at the beginning of conversion. When PRE = 1, the acquisition stage begins when precharge ends.

At the start of the acquisition stage, the port pin logic of the selected analog channel is overridden to turn off the digital high/low output drivers so they do not affect the final result of the charge averaging. Also, the selected ADC channel is connected to CHOLD. This allows charge averaging to proceed between the precharged channel and the CHOLD capacitor.

Note:	When PRE! = 0, acquisition time cannot be '0'. In this case, setting ADACQ to '0' will set a maximum acquisition time (8191 ADC clock cycles). When precharge is disabled, setting ADACQ to '0' will disable hardware acquisition time control.

19.4.4 GUARD RING OUTPUTS

Figure 19-8 shows a typical guard ring circuit. CGUARD represents the capacitance of the guard ring trace placed on the PCB board. The user selects values for RA and RB that will create a voltage profile on CGUARD, which will match the selected acquisition channel.

The purpose of the guard ring is to generate a signal in phase with the CVD sensing signal to minimize the effects of the parasitic capacitance on sensing electrodes. It also can be used as a mutual drive for mutual capacitive sensing. For more information about active guard and mutual drive, see Application Note AN1478, "*mTouch™ Sensing Solution Acquisition Methods Capacitive Voltage Divider*" (DS01478).

The ADC has two guard ring drive outputs, ADGRDA and ADGRDB. These outputs can be routed through PPS controls to I/O pins (see **Section 15.0 "Peripheral Pin Select (PPS) Module"** for details) and the polarity of these outputs are controlled by the ADGPOL and ADIPEN bits of ADCON1.

At the start of the first precharge stage, both outputs are set to match the ADGPOL bit of ADCON1. Once the acquisition stage begins, ADGRDA changes polarity, while ADGRDB remains unchanged. When performing a double sample conversion, setting the ADIPEN bit of ADCON1 causes both guard ring outputs to transition to the opposite polarity of ADGPOL at the start of the second precharge stage, and ADGRDA toggles again for the second acquisition. For more information on the timing of the guard ring output, refer to Figure 19-8 and Figure 19-9.

FIGURE 19-8: GUARD RING CIRCUIT

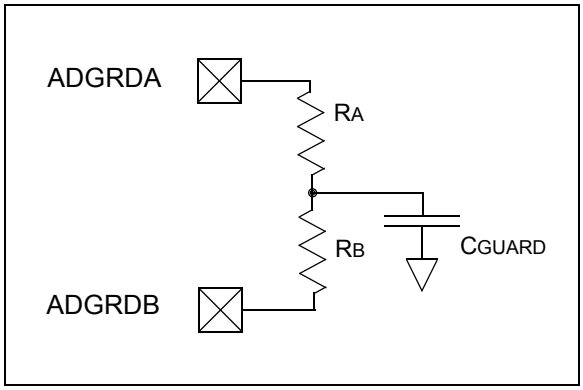

FIGURE 19-9: DIFFERENTIAL CVD WITH GUARD RING OUTPUT WAVEFORM

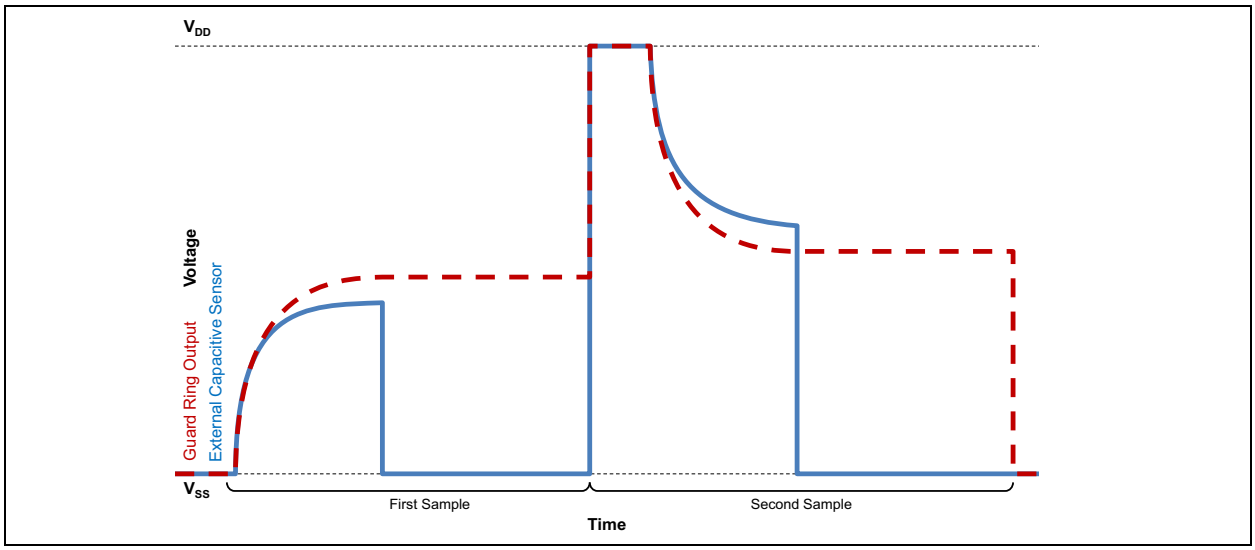

19.4.5 ADDITIONAL SAMPLE AND HOLD CAPACITANCE

Additional capacitance can be added in parallel with the internal sample and hold capacitor (CHOLD) by using the ADCAP register. This register selects a digitally programmable capacitance which is added to the ADC conversion bus, increasing the effective internal capacitance of the sample and hold capacitor in the ADC module. This is used to improve the match between internal and external capacitance for a better sensing performance. The additional capacitance does not affect analog performance of the ADC because it is not connected during conversion. See Figure 19-10.

19.5 Computation Operation

The ADC module hardware is equipped with post conversion computation features. These features provide data post-processing functions that can be operated on the ADC conversion result, including digital filtering/averaging and threshold comparison functions.

FIGURE 19-10: COMPUTATIONAL FEATURES SIMPLIFIED BLOCK DIAGRAM

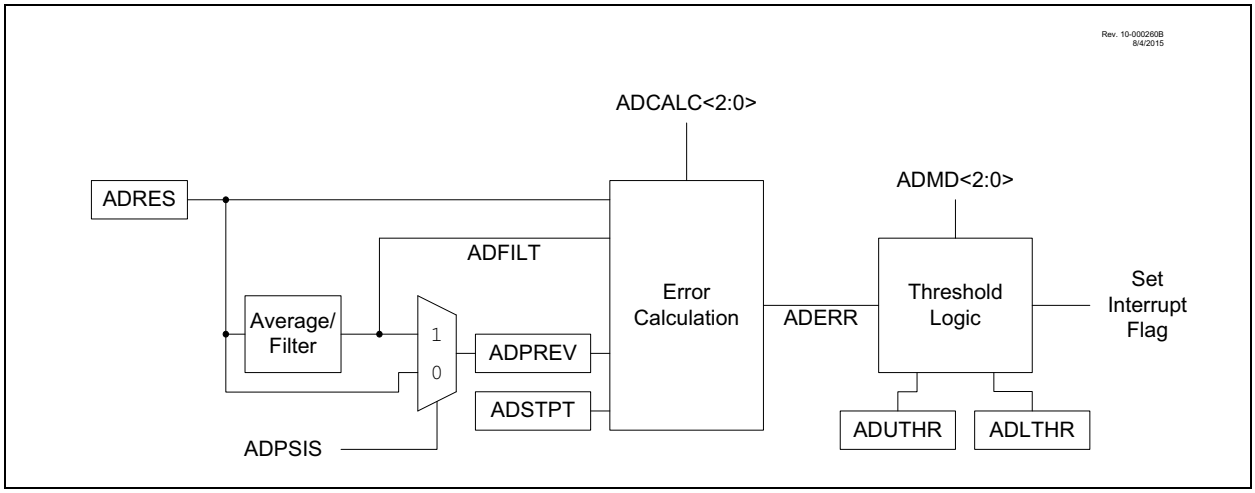

The operation of the ADC computational features is controlled by MD <2:0> bits in the ADCON2 register.

The module can be operated in one of five modes:

• **Basic**: In this mode, ADC conversion occurs on single (ADDSEN = 0) or double (ADDSEN = 1) samples. ADIF is set after all the conversion are complete.

• **Accumulate**: With each trigger, the ADC conversion result is added to accumulator and CNT increments. ADIF is set after each conversion. ADTIF is set according to the Calculation mode.

• **Average**: With each trigger, the ADC conversion result is added to the accumulator. When the RPT number of samples have been accumulated, a threshold test is performed. Upon the next trigger, the accumulator is cleared. For the subsequent tests, additional RPT samples are required to be accumulated.

• **Burst Average**: At the trigger, the accumulator is cleared. The ADC conversion results are then collected repetitively until RPT samples are accumulated and finally the threshold is tested.

• **Low-Pass Filter (LPF)**: With each trigger, the ADC conversion result is sent through a filter. When RPT samples have occurred, a threshold test is performed. Every trigger after that the ADC conversion result is sent through the filter and another threshold test is performed.

The five modes are summarized in Table 19-2 below.

TABLE 19-2: COMPUTATION MODES

		Bit Clear Conditions	Value after Trigger completion		Threshold Operations			Value at ADTIF Interrupt		
Mode	ADMD	ACC and CNT	ACC	CNT	Retrigger	Threshold Test	Interrupt	OV	FLTR	CNT
Basic	0	ADACLR = 1	Unchanged	Unchanged	No	Every Sample	If threshold=true	N/A	N/A	count
Accumulate	1	ADACLR = 1	S + ACC or (S2-S1) + ACC	If (CNT=0xFF): CNT, otherwise: CNT+1	No	Every Sample	If threshold=true	ACC Overflow	$ACC/2^{ADCRS}$	count
Average	2	ADACLR = 1 or CNT>=RPT at GO or retrigger	S + ACC or (S2-S1) + ACC	If (CNT=0xFF): CNT, otherwise: CNT+1	No	If CNT>=RPT	If threshold=true	ACC Overflow	$ACC/2^{ADCRS}$	count
Burst Average	3	ADACLR = 1 or GO set or retrigger	Each repetition: same as Average End with sum of all samples	Each repetition: same as Average End with CNT=RPT	Repeat while CNT<RPT	If CNT>=RPT	If threshold=true	ACC Overflow	$ACC/2^{ADCRS}$	RPT
Low-pass Filter	4	ADACLR = 1	$S+ACC-ACC/2^{ADCRS}$ or $(S2-S1)+ACC-ACC/2^{ADCRS}$	Count up, stop counting when CNT = 0xFF	No	If CNT>=RPT	If threshold=true	ACC Overflow	Filtered Value	count

Note: S1 and S2 are abbreviations for Sample 1 and Sample 2, respectively. When ADDSEN = 0, S1 = ADRES; When ADDSEN = 1, S1 = PREV and S2 = ADRES.

© 2017-2019 Microchip Technology Inc.

19.5.1 DIGITAL FILTER/AVERAGE

The digital filter/average module consists of an accumulator with data feedback options, and control logic to determine when threshold tests need to be applied. The accumulator is a 24-bit wide register with sign extension which can be accessed through the ADACCU:H:L register triple.

Upon each trigger event (the GO bit set or external event trigger), the ADC conversion result is added to the accumulator. If the accumulated result exceeds $2^{(accumulator_width)}$-1 = 18 = 262143, the overflow bit OV in the ADSTAT register is set.

The number of samples to be accumulated is determined by the RPT (A/D Repeat Setting) register. Each time a sample is added to the accumulator, the ADCNT register is incremented. Once RPT samples are accumulated (CNT = RPT), an accumulator clear command can be issued by the software by setting the ADACLR bit in the ADCON2 register. Setting the ADACLR bit will also clear the OV (Accumulator overflow) bit in the ADSTAT register, as well as the ADCNT register. The ADACLR bit is cleared by the hardware when accumulator clearing action is complete.

> **Note:** When ADC is operating from FRC, five FRC clock cycles are required to execute the ACC clearing operation.

The ADCRS <2:0> bits in the ADCON2 register control the data shift on the accumulator result, which effectively divides the value in accumulator (ADACCU:ADACCH:ADACCL) register triple For the Accumulate mode of the digital filter, the shift provides a simple scaling operation. For the Average/Burst Average modes, the shift bits are used to determine the number of arithmetic right shifts to be performed on the accumulated result. For the Low-Pass Filter mode, the shift is an integral part of the filter, and determines the cut-off frequency of the filter. Table 19-3 shows the -3 dB cut-off frequency in ωT (radians) and the highest signal attenuation obtained by this filter at nyquist frequency (ωT = π).

TABLE 19-3: LOW-PASS FILTER -3 dB CUT-OFF FREQUENCY

ADCRS	ωT (radians) @ -3 dB Frequency	dB @ $F_{nyquist}$=1/(2T)
1	0.72	-9.5
2	0.284	-16.9
3	0.134	-23.5
4	0.065	-29.8
5	0.032	-36.0
6	0.016	-42.0
7	0.0078	-48.1

19.5.2 BASIC MODE

Basic mode (ADMD = `000`) disables all additional computation features. In this mode, no accumulation occurs but threshold error comparison is performed. Double sampling, Continuous mode, and all CVD features are still available, but no features involving the digital filter/average features are used.

19.5.3 ACCUMULATE MODE

In Accumulate mode (ADMD = `001`), after every conversion, the ADC result is added to the ADACC register. The ADACC register is right-shifted by the value of the ADCRS bits in the ADCON2 register. This right-shifted value is copied in to the ADFLT register. The Formatting mode does not affect the right-justification of the ACC value. Upon each sample, CNT is also incremented, incrementing the number of samples accumulated. After each sample and accumulation, the ACC value has a threshold comparison performed on it (see **Section 19.5.7 "Threshold Comparison"**) and the ADTIF interrupt may trigger.

19.5.4 AVERAGE MODE

In Average mode (ADMD = `010`), the ADACC registers accumulate with each ADC sample, much as in Accumulate mode, and the ADCNT register increments with each sample. The ADFLT register is also updated with the right-shifted value of the ADACC register. The value of the ADCRS bits governs the number of right shifts. However, in Average mode, the threshold comparison is performed upon CNT being greater than or equal to a user-defined RPT value. In this mode when RPT = 2^ADCRS–the shift distance, then the final accumulated value will be divided by number of samples, allowing for a threshold comparison operation on the average of all gathered samples.

19.5.5 BURST AVERAGE MODE

The Burst Average mode (ADMD = `011`) acts the same as the Average mode in most respects. The one way it differs is that it continuously retriggers ADC sampling until the CNT value is greater than or equal to RPT, even if Continuous Sampling mode (see **Section 19.5.8 "Continuous Sampling mode"**) is not enabled. This allows for a threshold comparison on the average of a short burst of ADC samples.

19.5.6 LOW-PASS FILTER MODE

The Low-Pass Filter mode (ADMD = `100`) acts similarly to the Average mode in how it handles samples (accumulates samples until CNT value is greater than or equal to RPT, then triggers threshold comparison. CNT does not reset once it is greater or equal to RPT. Thus CNT will be greater than RPT for all subsequent samples until CNT is reset by the user), but instead of a simple average, it performs a low-pass filter operation on all of the samples, reducing the effect of high-frequency noise on the average, then performs a threshold comparison on the results. (see Table 19-2 for a more detailed description of the mathematical operation). In this mode, the ADCRS bits determine the cut-off frequency of the low-pass filter (as demonstrated by Table 19-3).

19.5.7 THRESHOLD COMPARISON

At the end of each computation:

- The conversion results are latched and held stable at the end-of-conversion.
- The error is calculated based on a difference calculation which is selected by the ADCALC<2:0> bits in the ADCON3 register. The value can be one of the following calculations (see Register 19-4 for more details):
  - The first derivative of single measurements
  - The CVD result in CVD mode
  - The current result vs. a setpoint
  - The current result vs. the filtered/average result
  - The first derivative of the filtered/average value
  - Filtered/average value vs. a setpoint
- The result of the calculation (ERR) is compared to the upper and lower thresholds, UTH<ADUTHH:ADUTHL> and LTH<ADLTHH:ADLTHL> registers, to set the ADUTHR and ADLTHR flag bits. The threshold logic is selected by ADTMD<2:0> bits in the ADCON3 register. The threshold trigger option can be one of the following:
  - Never interrupt
  - Error is less than lower threshold
  - Error is greater than or equal to lower threshold
  - Error is between thresholds (inclusive)
  - Error is outside of thresholds
  - Error is less than or equal to upper threshold
  - Error is greater than upper threshold
  - Always interrupt regardless of threshold test results
  - If the threshold condition is met, the threshold interrupt flag ADTIF is set.

Note 1: The threshold tests are signed operations.

2: If OV is set, a threshold interrupt is signaled.

19.5.8 CONTINUOUS SAMPLING MODE

Setting the CONT bit in the ADCON0 register automatically retriggers a new conversion cycle after updating the ADACC register. The GO bit remains set and re-triggering occurs automatically.

If ADSOI = 1, a threshold interrupt condition will clear GO and the conversions will stop.

19.5.9 DOUBLE SAMPLE OR CVD CONVERSION MODE

Double sampling is enabled by setting the ADDSEN bit of the ADCON1 register. When this bit is set, two conversions are required before the module will calculate threshold error (each conversion must still be triggered separately). The first conversion will set the ADMATH bit of the ADSTAT register and update ADACC, but will not calculate ERR or trigger ADTIF. When the second conversion completes, the first value is transferred to PREV (depending on the setting of ADPSIS) and the value of the second conversion is placed into ADRES. Only upon the completion of the second conversion is ERR calculated and ADTIF triggered (depending on the value of ADCALC). The ADACC registers will contain the difference of the two samples taken.

19.6 Register Definitions: ADC Control

REGISTER 19-1: ADCON0: ADC CONTROL REGISTER 0

R/W-0/0	R/W-0/0	U-0	R/W-0/0	U-0	R/W-0/0	U-0	R/W/HC-0
ON	CONT	—	CS	—	FM	—	GO
bit 7							bit 0

Legend:		
R = Readable bit	W = Writable bit	U = Unimplemented bit, read as ‘0’
u = Bit is unchanged	x = Bit is unknown	-n/n = Value at POR and BOR/Value at all other Resets
‘1’ = Bit is set	‘0’ = Bit is cleared	HC = Bit is cleared by hardware

bit 7 **ON:** ADC Enable bit
1 = ADC is enabled
0 = ADC is disabled

bit 6 **CONT:** ADC Continuous Operation Enable bit(2)
1 = GO is retriggered upon completion of each conversion trigger until ADTIF is set (if ADSOI is set) or until GO is cleared (regardless of the value of ADSOI)
0 = ADC is cleared upon completion of each conversion trigger

bit 5 **Unimplemented:** Read as ‘0’

bit 4 **CS:** ADC Clock Selection bit
1 = Clock supplied from FRC dedicated oscillator
0 = Clock supplied by FOSC, divided according to ADCLK register

bit 3 **Unimplemented:** Read as ‘0’

bit 2 **FM:** ADC results Format/alignment Selection
1 = ADRES and PREV data are right-justified
0 = ADRES and PREV data are left-justified, zero-filled

bit 1 **Unimplemented:** Read as ‘0’

bit 0 **GO:** ADC Conversion Status bit(1)
1 = ADC conversion cycle in progress. Setting this bit starts an ADC conversion cycle. The bit is cleared by hardware as determined by the CONT bit
0 = ADC conversion completed/not in progress

Note 1: This bit requires ON bit to be set.

2: If cleared by software while a conversion is in progress, the results of the conversion up to this point will be transfered to ADRES and the state machine will be reset, but the ADIF interrupt flag bit will not be set; filter and threshold operations will not be performed.

REGISTER 19-2: ADCON1: ADC CONTROL REGISTER 1

R/W-0/0	R/W-0/0	R/W-0/0	U-0	U-0	U-0	U-0	R/W-0/0
PPOL	IPEN	GPOL	—	—	—	—	DSEN
bit 7							bit 0

Legend:		
R = Readable bit	W = Writable bit	U = Unimplemented bit, read as ‘0’
u = Bit is unchanged	x = Bit is unknown	-n/n = Value at POR and BOR/Value at all other Resets
‘1’ = Bit is set	‘0’ = Bit is cleared	

bit 7 **PPOL:** Precharge Polarity bit
If PRE>0x00:

PPOL	Action During 1st Precharge Stage	
	External (selected analog I/O pin)	**Internal (AD sampling capacitor)**
1	Connected to VDD	C_{HOLD} connected to VSS
0	Connected to VSS	C_{HOLD} connected to VDD

Otherwise:
The bit is ignored

bit 6 **IPEN:** A/D Inverted Precharge Enable bit
If DSEN = 1
1 = The precharge and guard signals in the second conversion cycle are the opposite polarity of the first cycle
0 = Both Conversion cycles use the precharge and guards specified by ADPPOL and ADGPOL
Otherwise:
The bit is ignored

bit 5 **GPOL:** Guard Ring Polarity Selection bit
1 = ADC guard Ring outputs start as digital high during Precharge stage
0 = ADC guard Ring outputs start as digital low during Precharge stage

bit 4-1 **Unimplemented:** Read as ‘0’

bit 0 **DSEN:** Double-sample enable bit
1 = Two conversions are performed on each trigger. Data from the first conversion appears in PREV
0 = One conversion is performed for each trigger

REGISTER 19-3: ADCON2: ADC CONTROL REGISTER 2

R/W-0/0	R/W-0/0	R/W-0/0	R/W-0/0	R/W/HC-0	R/W-0/0	R/W-0/0	R/W-0/0
PSIS	CRS<2:0>			ACLR	MD<2:0>		
bit 7							bit 0

Legend:		
R = Readable bit	W = Writable bit	U = Unimplemented bit, read as ‘0’
u = Bit is unchanged	x = Bit is unknown	-n/n = Value at POR and BOR/Value at all other Resets
‘1’ = Bit is set	‘0’ = Bit is cleared	HC = Bit is cleared by hardware

bit 7 **PSIS:** ADC Previous Sample Input Select bits
`1` = PREV is the FLTR value at start-of-conversion
`0` = PREV is the RES value at start-of-conversion

bit 6-4 **CRS<2:0>:** ADC Accumulated Calculation Right Shift Select bits
If ADMD = `100`:
Low-pass filter time constant is 2^{ADCRS}, filter gain is 1:1
If ADMD = `001`, `010` or `011`:
The accumulated value is right-shifted by CRS (divided by 2^{ADCRS})**(1,2)**
Otherwise:
Bits are ignored

bit 3 **ACLR:** A/D Accumulator Clear Command bit**(3)**
`1` = ACC, AOV and CNT registers are cleared
`0` = Clearing action is complete (or not started)

bit 2-0 **MD<2:0>:** ADC Operating Mode Selection bits**(4)**
`111-101` = Reserved
`100` = Low-pass Filter mode
`011` = Burst Average mode
`010` = Average mode
`001` = Accumulate mode
`000` = Basic mode

Note 1: To correctly calculate an average, the number of samples (set in RPT) must be 2^{ADCRS}.
2: ADCRS = `3'b111` is a reserved option.
3: This bit is cleared by hardware when the accumulator operation is complete; depending on oscillator selections, the delay may be many instructions.
4: See Table 19-2 for Full mode descriptions.

REGISTER 19-4: ADCON3: ADC CONTROL REGISTER 3

U-0	R/W-0/0	R/W-0/0	R/W-0/0	R/W/HC-0	R/W-0/0	R/W-0/0	R/W-0/0
—	CALC<2:0>			SOI	TMD<2:0>		
bit 7							bit 0

Legend:		
R = Readable bit	W = Writable bit	U = Unimplemented bit, read as ‘0’
u = Bit is unchanged	x = Bit is unknown	-n/n = Value at POR and BOR/Value at all other Resets
‘1’ = Bit is set	‘0’ = Bit is cleared	HC = Bit is cleared by hardware

bit 7 **Unimplemented:** Read as ‘0’

bit 6-4 **CALC<2:0>:** ADC Error Calculation Mode Select bits

CALC	DSEN = 0 Single-Sample Mode	DSEN = 1 CVD Double-Sample Mode(1)	Application
111	Reserved	Reserved	Reserved
110	Reserved	Reserved	Reserved
101	FLTR-STPT	FLTR-STPT	Average/filtered value vs. setpoint
100	PREV-FLTR	PREV-FLTR	First derivative of filtered value(3) (negative)
011	Reserved	Reserved	Reserved
010	RES-FLTR	(RES-PREV)-FLTR	Actual result vs. averaged/filtered value
001	RES-STPT	(RES-PREV)-STPT	Actual result vs.setpoint
000	RES-PREV	RES-PREV	First derivative of single measurement(2)
			Actual CVD result in CVD mode(2)

bit 3 **SOI:** ADC Stop-on-Interrupt bit

If CONT = 1:

1 = GO is cleared when the threshold conditions are met, otherwise the conversion is retriggered

0 = GO is not cleared by hardware, must be cleared by software to stop retriggers

bit 2-0 **TMD<2:0>:** Threshold Interrupt Mode Select bits

111 = Interrupt regardless of threshold test results

110 = Interrupt if ERR>UTH

101 = Interrupt if ERR≤UTH

100 = Interrupt if ERR<LTH or ERR>UTH

011 = Interrupt if ERR>LTH and ERR<UTH

010 = Interrupt if ERR≥LTH

001 = Interrupt if ERR<LTH

000 = Never interrupt

Note 1: When PSIS = 0, the value of (RES-PREV) is the value of (S2-S1) from Table 19-2.

2: When ADPSIS = 0.

3: When ADPSIS = 1.

REGISTER 19-5: ADSTAT: ADC STATUS REGISTER

R-0/0	R-0/0	R-0/0	R/HS/HC-0/0	U-0	R-0/0	R-0/0	R-0/0
OV	UTHR	LTHR	MATH	—	STAT<2:0>		
bit 7							bit 0

Legend:		
R = Readable bit	W = Writable bit	U = Unimplemented bit, read as ‘0’
u = Bit is unchanged	x = Bit is unknown	-n/n = Value at POR and BOR/Value at all other Resets
‘1’ = Bit is set	‘0’ = Bit is cleared	HS/HC = Bit is set/cleared by hardware

bit 7 **OV**: ADC Accumulator Overflow bit
`1` = ADC accumulator or ERR calculation have overflowed
`0` = ADC accumulator and ERR calculation have not overflowed

bit 6 **UTHR**: ADC Module Greater-than Upper Threshold Flag bit
`1` = ERR >UTH
`0` = ERR≤UTH

bit 5 **LTHR**: ADC Module Less-than Lower Threshold Flag bit
`1` = ERR<LTH
`0` = ERR≥LTH

bit 4 **MATH**: ADC Module Computation Status bit
`1` = Registers ACC, FLTR, UTH, LTH and the AOV bit are updating or have already updated
`0` = Associated registers/bits have not changed since this bit was last cleared

bit 3 **Unimplemented:** Read as ‘`0`’

bit 2-0 **STAT<2:0>**: ADC Module Cycle Multistage Status bits(1)
`111` = ADC module is in 2nd conversion stage
`110` = ADC module is in 2nd acquisition stage
`101` = ADC module is in 2nd precharge stage
`100` = Not used
`011` = ADC module is in 1st conversion stage
`010` = ADC module is in 1st acquisition stage
`001` = ADC module is in 1st precharge stage
`000` = ADC module is not converting

Note 1: If CS = `1`, and FOSC<FRC, these bits may be invalid.

REGISTER 19-6: ADCLK: ADC CLOCK SELECTION REGISTER

U-0	U-0	R/W-0/0	R/W-0/0	R/W-0/0	R/W-0/0	R/W-0/0	R/W-0/0
—	—	CS<5:0>					
bit 7							bit 0

Legend:		
R = Readable bit	W = Writable bit	U = Unimplemented bit, read as ‘0’
u = Bit is unchanged	x = Bit is unknown	-n/n = Value at POR and BOR/Value at all other Resets
‘1’ = Bit is set	‘0’ = Bit is cleared	

bit 7-6 **Unimplemented**: Read as ‘0’

bit 5-0 **CS<5:0>**: ADC Conversion Clock Select bits
111111 = Fosc/128
111110 = Fosc/126
111101 = Fosc/124
•
•
•
000000 = Fosc/2

REGISTER 19-7: ADREF: ADC REFERENCE SELECTION REGISTER

U-0	U-0	U-0	U-0	U-0	U-0	R/W-0/0	R/W-0/0
—	—	—	—	—	—	PREF<1:0>	
bit 7							bit 0

Legend:		
R = Readable bit	W = Writable bit	U = Unimplemented bit, read as ‘0’
u = Bit is unchanged	x = Bit is unknown	-n/n = Value at POR and BOR/Value at all other Resets
‘1’ = Bit is set	‘0’ = Bit is cleared	

bit 7-2 **Unimplemented**: Read as ‘0’

bit 1-0 **PREF<1:0>**: ADC Positive Voltage Reference Selection bits
11 = VREF+ is connected to internal Fixed Voltage Reference (FVR) module
10 = VREF+ is connected to external VREF+
01 = Reserved
00 = VREF+ is connected to VDD

REGISTER 19-8: ADPCH: ADC POSITIVE CHANNEL SELECTION REGISTER

U-0	U-0	R/W-0/0	R/W-0/0	R/W-0/0	R/W-0/0	R/W-0/0	R/W-0/0
—	—	ADPCH<5:0>					
bit 7							bit 0

Legend:		
R = Readable bit	W = Writable bit	U = Unimplemented bit, read as ‘0’
u = Bit is unchanged	x = Bit is unknown	-n/n = Value at POR and BOR/Value at all other Resets
‘1’ = Bit is set	‘0’ = Bit is cleared	

bit 7-6 **Unimplemented**: Read as ‘0’

bit 5-0 **ADPCH<5:0>**: ADC Positive Input Channel Selection bits

ADPCH <5:0>	Device Pin Count			ADC Input Connection
	28	40	48	
0x00	•	•	•	RA0
0x01	•	•	•	RA1
0x02	•	•	•	RA2
0x03	•	•	•	RA3
0x04	•	•	•	RA4
0x05	—	—	—	RA5
0x06	•	•	•	RA6
0x07	•	•	•	RA7
0x08	•	•	•	RB0
0x09	•	•	•	RB1
0x0A	•	•	•	RB2
0x0B	•	•	•	RB3
0x0C	•	•	•	RB4
0x0D	•	•	•	RB5
0x0E	•	•	•	RB6
0x0F	•	•	•	RB7
0x10	—	—	—	RC0
0x11	—	—	—	RC1
0x12	•	•	•	RC2
0x13	•	•	•	RC3
0x14	•	•	•	RC4
0x15	—	—	—	RC5
0x16	•	•	•	RC6
0x17	•	•	•	RC7
0x18	—	•	•	RD0
0x19	—	•	•	RD1
0x1A	—	•	•	RD2
0x1B	—	•	•	RD3
0x1C	—	•	•	RD4
0x1D	—	•	•	RD5
0x1E	—	•	•	RD6
0x1F	—	•	•	RD7

ADPCH <5:0>	Device Pin Count			ADC Input Connection
	28	40	48	
0x20	—	•	•	RE0
0x21	—	•	•	RE1
0x22	—	•	•	RE2
0x23	—	—	—	RE3
0x24	—	—	—	RE4
0x25	—	—	—	RE5
0x26	—	—	—	RE6
0x27	—	—	—	RE7
0x28	—	—	•	RF0
0x29	—	—	•	RF1
0x2A	—	—	•	RF2
0x2B	—	—	•	RF3
0x2C	—	—	•	RF4
0x2D	—	—	•	RF5
0x2E	—	—	•	RF6
0x2F	—	—	•	RF7
0x30	—	—	—	RG0
0x31	—	—	—	RG1
0x32	—	—	—	RG2
0x33	—	—	—	RG3
0x34	—	—	—	RG4
0x35	—	—	—	RG5
0x36	—	—	—	RG6
0x37	—	—	—	RG7
0x38	—	—	—	—
0x39	VLCD3 divided by 4(4)			
0x3A	VBAT divided by 3(5)			
0x3B	AVSS (Analog Ground)			
0x3C	Temperature Indicator(3)			
0x3D	DAC1 Output(1)			
0x3E	FVR Buffer 1(2)			
0x3F	FVR Buffer 2(2)			

Note 1: See **Section 19.0 “Analog-to-Digital Converter with Computation (ADC2) Module”** for more information.
2: See **Section 18.0 “Fixed Voltage Reference (FVR)”** for more information.
3: See **Section 20.0 “Temperature Indicator Module (TIM)”** for more information.
4: See **Section 35.0 “Liquid Crystal Display (LCD) Controller”** for more information.
5: See **Section 8.0 “Resets and Vbat”** for more information.

REGISTER 19-9: ADPREL: ADC PRECHARGE TIME CONTROL REGISTER (LOW BYTE)

R/W-0/0	R/W-0/0	R/W-0/0	R/W-0/0	R/W-0/0	R/W-0/0	R/W-0/0	R/W-0/0
PRE<7:0>							
bit 7							bit 0

Legend:		
R = Readable bit	W = Writable bit	U = Unimplemented bit, read as ‘0’
u = Bit is unchanged	x = Bit is unknown	-n/n = Value at POR and BOR/Value at all other Resets
‘1’ = Bit is set	‘0’ = Bit is cleared	

bit 7-0 **PRE<7:0>**: Precharge Time Select bits
See Table 19-4.

REGISTER 19-10: ADPREH: ADC PRECHARGE TIME CONTROL REGISTER (HIGH BYTE)

U-0	U-0	U-0	R/W-0/0	R/W-0/0	R/W-0/0	R/W-0/0	R/W-0/0
—	—	—	PRE<12:8>				
bit 7							bit 0

Legend:		
R = Readable bit	W = Writable bit	U = Unimplemented bit, read as ‘0’
u = Bit is unchanged	x = Bit is unknown	-n/n = Value at POR and BOR/Value at all other Resets
‘1’ = Bit is set	‘0’ = Bit is cleared	

bit 7-5 **Unimplemented**: Read as ‘0’

bit 4-0 **PRE<12:8>:** Precharge Time Select bits(1)
See Table 19-4.

Note: If PRE is not equal to ‘0’, then ADACQ = b’00000000 means Acquisition time is 256 clocks of the selected ADC clock.

TABLE 19-4: PRECHARGE TIME

ADPRE	Precharge time
1 1111 1111 1111	8191 clocks of the selected ADC clock
1 1111 1111 1110	8190 clocks of the selected ADC clock
1 1111 1111 1101	8189 clocks of the selected ADC clock
...	...
0 0000 0000 0010	2 clocks of the selected ADC clock
0 0000 0000 0001	1 clock of the selected ADC clock
0 0000 0000 0000	Not included in the data conversion cycle

REGISTER 19-11: ADACQL: ADC ACQUISITION TIME CONTROL REGISTER (LOW BYTE)

R/W-0/0	R/W-0/0	R/W-0/0	R/W-0/0	R/W-0/0	R/W-0/0	R/W-0/0	R/W-0/0
ACQ<7:0>							
bit 7							bit 0

Legend:		
R = Readable bit	W = Writable bit	U = Unimplemented bit, read as ‘0’
u = Bit is unchanged	x = Bit is unknown	-n/n = Value at POR and BOR/Value at all other Resets
‘1’ = Bit is set	‘0’ = Bit is cleared	

bit 7-0 ACQ<7:0>: Acquisition (charge share time) Select bits
See Table 19-6.

REGISTER 19-12: ADACQH: ADC ACQUISITION TIME CONTROL REGISTER (HIGH BYTE)

U-0	U-0	U-0	R/W-0/0	R/W-0/0	R/W-0/0	R/W-0/0	R/W-0/0
—	—	—	ACQ<12:8>				
bit 7							bit 0

Legend:		
R = Readable bit	W = Writable bit	U = Unimplemented bit, read as ‘0’
u = Bit is unchanged	x = Bit is unknown	-n/n = Value at POR and BOR/Value at all other Resets
‘1’ = Bit is set	‘0’ = Bit is cleared	

bit 7-5 **Unimplemented**: Read as ‘0’

bit 4-0 ACQ<12:8>: Acquisition (charge share time) Select bits
See Table 19-6.

TABLE 19-5: ACQUISITION TIME

ADACQ	Acquisition time
1 1111 1111 1111	8191 clocks of the selected ADC clock
1 1111 1111 1110	8190 clocks of the selected ADC clock
1 1111 1111 1101	8189 clocks of the selected ADC clock
...	...
0 0000 0000 0010	2 clocks of the selected ADC clock
0 0000 0000 0001	1 clock of the selected ADC clock
0 0000 0000 0000	Not included in the data conversion cycle(1)

Note 1: If ADPRE is not equal to ‘0’, then ADACQ = b’0_0000_0000_0000 means Acquisition time is 8192 clocks of the selected ADC clock.

REGISTER 19-13: ADCAP: ADC ADDITIONAL SAMPLE CAPACITOR SELECTION REGISTER

U-0	U-0	U-0	R/W-0/0	R/W-0/0	R/W-0/0	R/W-0/0	R/W-0/0
—	—	—	ADCAP<4:0>				
bit 7							bit 0

Legend:		
R = Readable bit	W = Writable bit	U = Unimplemented bit, read as ‘0’
u = Bit is unchanged	x = Bit is unknown	-n/n = Value at POR and BOR/Value at all other Resets
‘1’ = Bit is set	‘0’ = Bit is cleared	

bit 7-5 **Unimplemented**: Read as ‘0’

bit 4-0 **ADCAP<4:0>**: ADC Additional Sample Capacitor Selection bits
11111 = 31 pF
11110 = 30 pF
11101 = 29 pF
•
•
•
00011 = 3 pF
00010 = 2 pF
00001 = 1 pF
00000 = No additional capacitance

REGISTER 19-14: ADRPT: ADC REPEAT SETTING REGISTER

R/W-0/0	R/W-0/0	R/W-0/0	R/W-0/0	R/W-0/0	R/W-0/0	R/W-0/0	R/W-0/0
RPT<7:0>							
bit 7							bit 0

Legend:		
R = Readable bit	W = Writable bit	U = Unimplemented bit, read as ‘0’
u = Bit is unchanged	x = Bit is unknown	-n/n = Value at POR and BOR/Value at all other Resets
‘1’ = Bit is set	‘0’ = Bit is cleared	

bit 7-0 **RPT<7:0>**: ADC Repeat Threshold bits
Determines the number of times that the ADC is triggered before the threshold is checked when the computation is Low-pass Filter, Burst Average, or Average modes. See Table 19-2 for more details.

REGISTER 19-15: ADCNT: ADC REPEAT COUNTER REGISTER

R/W-x/u	R/W-x/u	R/W-x/u	R/W-x/u	R/W-x/u	R/W-x/u	R/W-x/u	R/W-x/u
CNT<7:0>							
bit 7							bit 0

Legend:		
R = Readable bit	W = Writable bit	U = Unimplemented bit, read as ‘0’
u = Bit is unchanged	x = Bit is unknown	-n/n = Value at POR and BOR/Value at all other Resets
‘1’ = Bit is set	‘0’ = Bit is cleared	

bit 7-0 **CNT<7:0>**: ADC Repeat Count bits
Counts the number of times that the ADC has been triggered and is used along with RPT to determine when the error threshold is checked when the computation is Low-pass Filter, Burst Average, or Average modes. See Table 19-2 for more details.

REGISTER 19-16: ADFLTRH: ADC FILTER HIGH BYTE REGISTER

R-x	R-x	R-x	R-x	R-x	R-x	R-x	R-x
FLTR<15:8>							
bit 7							bit 0

Legend:		
R = Readable bit	W = Writable bit	U = Unimplemented bit, read as ‘0’
u = Bit is unchanged	x = Bit is unknown	-n/n = Value at POR and BOR/Value at all other Resets
‘1’ = Bit is set	‘0’ = Bit is cleared	

bit 7-0 **FLTR<15:8>**: ADC Filter Output Most Significant bits
In Accumulate, Average, and Burst Average mode, this is equal to ACC right shifted by the ADCRS bits of ADCON2. In LPF mode, this is the output of the Low-pass Filter.

REGISTER 19-17: ADFLTRL: ADC FILTER LOW BYTE REGISTER

R-x	R-x	R-x	R-x	R-x	R-x	R-x	R-x
FLTR<7:0>							
bit 7							bit 0

Legend:		
R = Readable bit	W = Writable bit	U = Unimplemented bit, read as ‘0’
u = Bit is unchanged	x = Bit is unknown	-n/n = Value at POR and BOR/Value at all other Resets
‘1’ = Bit is set	‘0’ = Bit is cleared	

bit 7-0 **FLTR<7:0>**: ADC Filter Output Least Significant bits
In Accumulate, Average, and Burst Average mode, this is equal to ACC right shifted by the ADCRS bits of ADCON2. In LPF mode, this is the output of the Low-pass Filter.

REGISTER 19-18: ADRESH: ADC RESULT REGISTER HIGH, FM = 0

R/W-x/u	R/W-x/u	R/W-x/u	R/W-x/u	R/W-x/u	R/W-x/u	R/W-x/u	R/W-x/u
ADRES<11:4>							
bit 7							bit 0

Legend:		
R = Readable bit	W = Writable bit	U = Unimplemented bit, read as ‘0’
u = Bit is unchanged	x = Bit is unknown	-n/n = Value at POR and BOR/Value at all other Resets
‘1’ = Bit is set	‘0’ = Bit is cleared	

bit 7-0 **ADRES<11:4>**: ADC Result Register bits
Upper eight bits of 12-bit conversion result.

REGISTER 19-19: ADRESL: ADC RESULT REGISTER LOW, FM = 0

R/W-x/u	R/W-x/u	R/W-x/u	R/W-x/u	U-0	U-0	U-0	U-0
ADRES<3:0>				—	—	—	—
bit 7							bit 0

Legend:		
R = Readable bit	W = Writable bit	U = Unimplemented bit, read as ‘0’
u = Bit is unchanged	x = Bit is unknown	-n/n = Value at POR and BOR/Value at all other Resets
‘1’ = Bit is set	‘0’ = Bit is cleared	

bit 7-4 **ADRES<3:0>**: ADC Result Register bits. Lower four bits of 12-bit conversion result.
bit 3-0 **Unimplemented:** Read as ‘0’

REGISTER 19-20: ADRESH: ADC RESULT REGISTER HIGH, FM = 1

U-0	U-0	U-0	U-0	R/W-x/u	R/W-x/u	R/W-x/u	R/W-x/u
—	—	—	—	ADRES<11:8>			
bit 7							bit 0

Legend:		
R = Readable bit	W = Writable bit	U = Unimplemented bit, read as ‘0’
u = Bit is unchanged	x = Bit is unknown	-n/n = Value at POR and BOR/Value at all other Resets
‘1’ = Bit is set	‘0’ = Bit is cleared	

bit 7-4 **Unimplemented:** Read as ‘0’

bit 3-0 **ADRES<11:8>**: ADC Sample Result bits. Upper four bits of 12-bit conversion result.

REGISTER 19-21: ADRESL: ADC RESULT REGISTER LOW, FM = 1

R/W-x/u	R/W-x/u	R/W-x/u	R/W-x/u	R/W-x/u	R/W-x/u	R/W-x/u	R/W-x/u
ADRES<7:0>							
bit 7							bit 0

Legend:		
R = Readable bit	W = Writable bit	U = Unimplemented bit, read as ‘0’
u = Bit is unchanged	x = Bit is unknown	-n/n = Value at POR and BOR/Value at all other Resets
‘1’ = Bit is set	‘0’ = Bit is cleared	

bit 7-0 **ADRES<7:0>**: ADC Result Register bits. Lower eight bits of 12-bit conversion result.

REGISTER 19-22: ADPREVH: ADC PREVIOUS RESULT REGISTER

R-x	R-x	R-x	R-x	R-x	R-x	R-x	R-x
PREV<15:8>							
bit 7							bit 0

Legend:		
R = Readable bit	W = Writable bit	U = Unimplemented bit, read as ‘0’
u = Bit is unchanged	x = Bit is unknown	-n/n = Value at POR and BOR/Value at all other Resets
‘1’ = Bit is set	‘0’ = Bit is cleared	

bit 7-0 **PREV<15:8>**: Previous ADC Results bits
If ADPSIS = 1:
Upper byte of FLTR at the start of current ADC conversion
If ADPSIS = 0:
Upper bits of ADRES at the start of current ADC conversion(1)

Note 1: If ADPSIS = 0, ADPREVH and ADPREVL are formatted the same way as ADRES is, depending on the FM bit.

REGISTER 19-23: ADPREVL: ADC PREVIOUS RESULT REGISTER

R-x	R-x	R-x	R-x	R-x	R-x	R-x	R-x
PREV<7:0>							
bit 7							bit 0

Legend:		
R = Readable bit	W = Writable bit	U = Unimplemented bit, read as ‘0’
u = Bit is unchanged	x = Bit is unknown	-n/n = Value at POR and BOR/Value at all other Resets
‘1’ = Bit is set	‘0’ = Bit is cleared	

bit 7-0 **PREV<7:0>**: Previous ADC Results bits
If ADPSIS = 1:
Lower byte of FLTR at the start of current ADC conversion
If ADPSIS = 0:
Lower bits of ADRES at the start of current ADC conversion(1)

Note 1: If ADPSIS = 0, ADPREVH and ADPREVL are formatted the same way as ADRES is, depending on the FM bit.

REGISTER 19-24: ADACCU: ADC ACCUMULATOR REGISTER UPPER

U-0	U-0	U-0	U-0	U-0	U-0	R/W-x/x	R/W-x/x
—	—	—	—	—	—	ACC<17:16>	
bit 7							bit 0

Legend:		
R = Readable bit	W = Writable bit	U = Unimplemented bit, read as ‘0’
u = Bit is unchanged	x = Bit is unknown	-n/n = Value at POR and BOR/Value at all other Resets
‘1’ = Bit is set	‘0’ = Bit is cleared	

bit 7-2 **Unimplemented**: Read as ‘0’

bit 1-0 **ACC<17:16>**: ADC Accumulator MSB. Upper two bits of accumulator value. See Table 19-2 for more details.

REGISTER 19-25: ADACCH: ADC ACCUMULATOR REGISTER HIGH

R/W-x/x	R/W-x/x	R/W-x/x	R/W-x/x	R/W-x/x	R/W-x/x	R/W-x/x	R/W-x/x
ACC<15:8>							
bit 7							bit 0

Legend:		
R = Readable bit	W = Writable bit	U = Unimplemented bit, read as ‘0’
u = Bit is unchanged	x = Bit is unknown	-n/n = Value at POR and BOR/Value at all other Resets
‘1’ = Bit is set	‘0’ = Bit is cleared	

bit 7-0 **ACC<15:8>**: ADC Accumulator middle bits. Middle eight bits of accumulator value. See Table 19-2 for more details.

REGISTER 19-26: ADACCL: ADC ACCUMULATOR REGISTER LOW

R/W-x/x	R/W-x/x	R/W-x/x	R/W-x/x	R/W-x/x	R/W-x/x	R/W-x/x	R/W-x/x
ACC<7:0>							
bit 7							bit 0

Legend:		
R = Readable bit	W = Writable bit	U = Unimplemented bit, read as ‘0’
u = Bit is unchanged	x = Bit is unknown	-n/n = Value at POR and BOR/Value at all other Resets
‘1’ = Bit is set	‘0’ = Bit is cleared	

bit 7-0 **ACC<7:0>**: ADC Accumulator LSB. Lower eight bits of accumulator value. See Table 19-2 for more details.

REGISTER 19-27: ADSTPTH: ADC THRESHOLD SETPOINT REGISTER HIGH

R/W-0/0	R/W-0/0	R/W-0/0	R/W-0/0	R/W-0/0	R/W-0/0	R/W-0/0	R/W-0/0
STPT<15:8>							
bit 7							bit 0

Legend:		
R = Readable bit	W = Writable bit	U = Unimplemented bit, read as ‘0’
u = Bit is unchanged	x = Bit is unknown	-n/n = Value at POR and BOR/Value at all other Resets
‘1’ = Bit is set	‘0’ = Bit is cleared	

bit 7-0 **STPT<15:8>**: ADC Threshold Setpoint MSB. Upper byte of ADC threshold setpoint, depending on ADCALC, may be used to determine ERR, see Register 19-29 for more details.

REGISTER 19-28: ADSTPTL: ADC THRESHOLD SETPOINT REGISTER LOW

R/W-0/0	R/W-0/0	R/W-0/0	R/W-0/0	R/W-0/0	R/W-0/0	R/W-0/0	R/W-0/0
STPT<7:0>							
bit 7							bit 0

Legend:		
R = Readable bit	W = Writable bit	U = Unimplemented bit, read as ‘0’
u = Bit is unchanged	x = Bit is unknown	-n/n = Value at POR and BOR/Value at all other Resets
‘1’ = Bit is set	‘0’ = Bit is cleared	

bit 7-0 **STPT<7:0>**: ADC Threshold Setpoint LSB. Lower byte of ADC threshold setpoint, depending on ADCALC, may be used to determine ERR, see Register 19-30 for more details.

REGISTER 19-29: ADERRH: ADC SETPOINT ERROR REGISTER HIGH

R-x	R-x	R-x	R-x	R-x	R-x	R-x	R-x
ERR<15:8>							
bit 7							bit 0

Legend:		
R = Readable bit	W = Writable bit	U = Unimplemented bit, read as ‘0’
u = Bit is unchanged	x = Bit is unknown	-n/n = Value at POR and BOR/Value at all other Resets
‘1’ = Bit is set	‘0’ = Bit is cleared	

bit 7-0 **ERR<15:8>**: ADC Setpoint Error MSB. Upper byte of ADC Setpoint Error. Setpoint Error calculation is determined by ADCALC bits of ADCON3, see Register 19-4 for more details.

REGISTER 19-30: ADERRL: ADC SETPOINT ERROR LOW BYTE REGISTER

R-x	R-x	R-x	R-x	R-x	R-x	R-x	R-x
ERR<7:0>							
bit 7							bit 0

Legend:		
R = Readable bit	W = Writable bit	U = Unimplemented bit, read as ‘0’
u = Bit is unchanged	x = Bit is unknown	-n/n = Value at POR and BOR/Value at all other Resets
‘1’ = Bit is set	‘0’ = Bit is cleared	

bit 7-0 **ERR<7:0>**: ADC Setpoint Error LSB. Lower byte of ADC Setpoint Error calculation is determined by ADCALC bits of ADCON3, see Register 19-4 for more details.

REGISTER 19-31: ADLTHH: ADC LOWER THRESHOLD HIGH BYTE REGISTER

R/W-0/0	R/W-0/0	R/W-0/0	R/W-0/0	R/W-0/0	R/W-0/0	R/W-0/0	R/W-0/0
LTH<15:8>							
bit 7							bit 0

Legend:		
R = Readable bit	W = Writable bit	U = Unimplemented bit, read as ‘0’
u = Bit is unchanged	x = Bit is unknown	-n/n = Value at POR and BOR/Value at all other Resets
‘1’ = Bit is set	‘0’ = Bit is cleared	

bit 7-0 **LTH<15:8>**: ADC Lower Threshold MSB. LTH and UTH are compared with ERR to set the ADUTHR and ADLTHR bits of ADSTAT. Depending on the setting of ADTMD, an interrupt may be triggered by the results of this comparison.

REGISTER 19-32: ADLTHL: ADC LOWER THRESHOLD LOW BYTE REGISTER

R/W-0/0	R/W-0/0	R/W-0/0	R/W-0/0	R/W-0/0	R/W-0/0	R/W-0/0	R/W-0/0
LTH<7:0>							
bit 7							bit 0

Legend:		
R = Readable bit	W = Writable bit	U = Unimplemented bit, read as ‘0’
u = Bit is unchanged	x = Bit is unknown	-n/n = Value at POR and BOR/Value at all other Resets
‘1’ = Bit is set	‘0’ = Bit is cleared	

bit 7-0 **LTH<7:0>**: ADC Lower Threshold LSB. LTH and UTH are compared with ERR to set the ADUTHR and ADLTHR bits of ADSTAT. Depending on the setting of ADTMD, an interrupt may be triggered by the results of this comparison.

REGISTER 19-33: ADUTHH: ADC UPPER THRESHOLD HIGH BYTE REGISTER

R/W-0/0	R/W-0/0	R/W-0/0	R/W-0/0	R/W-0/0	R/W-0/0	R/W-0/0	R/W-0/0
UTH<15:8>							
bit 7							bit 0

Legend:		
R = Readable bit	W = Writable bit	U = Unimplemented bit, read as ‘0’
u = Bit is unchanged	x = Bit is unknown	-n/n = Value at POR and BOR/Value at all other Resets
‘1’ = Bit is set	‘0’ = Bit is cleared	

bit 7-0 **UTH<15:8>**: ADC Upper Threshold MSB. LTH and UTH are compared with ERR to set the ADUTHR and ADLTHR bits of ADSTAT. Depending on the setting of ADTMD, an interrupt may be triggered by the results of this comparison.

REGISTER 19-34: ADUTHL: ADC UPPER THRESHOLD LOW BYTE REGISTER

R/W-0/0	R/W-0/0	R/W-0/0	R/W-0/0	R/W-0/0	R/W-0/0	R/W-0/0	R/W-0/0
UTH<7:0>							
bit 7							bit 0

Legend:		
R = Readable bit	W = Writable bit	U = Unimplemented bit, read as ‘0’
u = Bit is unchanged	x = Bit is unknown	-n/n = Value at POR and BOR/Value at all other Resets
‘1’ = Bit is set	‘0’ = Bit is cleared	

bit 7-0 **UTH<7:0>**: ADC Upper Threshold LSB. LTH and UTH are compared with ERR to set the ADUTHR and ADLTHR bits of ADSTAT. Depending on the setting of ADTMD, an interrupt may be triggered by the results of this comparison.

REGISTER 19-35: ADACT: ADC AUTO-CONVERSION TRIGGER CONTROL REGISTER

U-0	U-0	U-0	R/W-0/0	R/W-0/0	R/W-0/0	R/W-0/0	R/W-0/0
—	—	—	ACT<4:0>				
bit 7							bit 0

Legend:		
R = Readable bit	W = Writable bit	U = Unimplemented bit, read as ‘0’
u = Bit is unchanged	x = Bit is unknown	-n/n = Value at POR and BOR/Value at all other Resets
‘1’ = Bit is set	‘0’ = Bit is cleared	

bit 7-5 **Unimplemented**: Read as ‘0’

bit 4-0 **ACT<4:0>**: Auto-Conversion Trigger Select Bits
11111 = Software write to ADPCH
11110 = Reserved, do not use
11101 = Software read of ADRESH
11100 = Software read of ADERRH
11011 = CLC4_out
11010 = CLC3_out
11001 = CLC2_out
11000 = CLC1_out
10111 = Logical OR of all Interrupt-on-change Interrupt Flags
10110 = CMP2_out
10101 = CMP1_out
10100 = Reserved, do not use
10011 = Reserved, do not use
10010 = Reserved, do not use
10001 = Reserved, do not use
10000 = Reserved, do not use
01111 = PWM4_out
01110 = PWM3_out
01101 = Reserved, do not use
01100 = Reserved, do not use
01011 = CCP2_trigger
01010 = CCP1_trigger
01001 = SMT1_trigger
01000 = RTCC Seconds
00111 = Reserved, do not use
00110 = TMR4_postscaled
00101 = Reserved, do not use
00100 = TMR2_postscaled
00011 = TMR1_overflow
00010 = TMR0_overflow
00001 = Pin selected by ADCACTPPS
00000 = External Trigger Disabled

REGISTER 19-36: ADCPCON0: ADC CHARGE PUMP CONTROL REGISTER

R/W-0/0	U-0	U-0	U-0	U-0	U-0	U-0	R-0/0
ADCPON	—	—	—	—	—	—	ADCPRDY
bit 7							bit 0

Legend:		
R = Readable bit	W = Writable bit	U = Unimplemented bit, read as ‘0’
u = Bit is unchanged	x = Bit is unknown	-n/n = Value at POR and BOR/Value at all other Resets
‘1’ = Bit is set	‘0’ = Bit is cleared	HS= Hardware set

bit 7 **ADCPON**: Charge Pump On Control bit
1 = Charge Pump On when requested by the ADC
0 = Charge Pump Off

bit 6-1 **Unimplemented:** Read as ‘0’

bit 0 **ADCPRDY:** Charge Pump Ready Status bit
1 = Charge Pump is ready
0 = Charge Pump is not ready (or never started)

TABLE 19-6: SUMMARY OF REGISTERS ASSOCIATED WITH ADC

Name	Bit 7	Bit 6	Bit 5	Bit 4	Bit 3	Bit 2	Bit 1	Bit 0	Register on Page
INTCON	GIE	PEIE	—	—	—	—	—	INTEDG	164
PIE1	OSFIE	CSWIE	—	—	—	—	ADTIE	ADIE	166
PIR1	OSFIF	CSWIF	—	—	—	—	ADTIF	ADIF	175
ADCON0	ON	CONT	—	CS	—	FM	—	GO	306
ADCON1	PPOL	IPEN	GPOL	—	—	—	—	DSEN	307
ADCON2	PSIS	CRS<2:0>			ACLR	MD<2:0>			308
ADCON3	—	CALC<2:0>			SOI	TMD<2:0>			309
ADACT	—	—	—	ACT<4:0>					308
ADRESH	ADRESH<7:0>								317, 318
ADRESL	ADRESL<7:0>								317, 318
ADPREVH	PREV<15:8>								319
ADPREVL	PREV<7:0>								319
ADACCU	—	—	—	—	—	—	ACC<16:17>		320
ADACCH	ACC<15:8>								320
ADACCL	ACC<7:0>								320
ADSTPTH	STPT<15:8>								321
ADSTPT	STPT<7:0>								321
ADERRL	ERR<7:0>								322
ADLTHH	LTH<15:8>								322
ADLTHL	LTH<7:0>								322
ADUTHH	UTH<15:8>								323
ADUTHL	UTH<7:0>								323
ADSTAT	OV	UTHR	LTHR	MATH	—	STAT<2:0>			310
ADCLK	—	—	CS<5:0>						311
ADREF	—	—	—	—	—	—	PREF<1:0>		311
ADPCH	—	—	ADPCH<5:0>						312
PRE	PRE<7:0>								313
ADACQ	ADACQ<7:0>								313
ADCAP	—	—	—	ADCAP<4:0>					315
ADRPT	RPT<7:0>								315
ADCNT	CNT<7:0>								316
ADFLTRH	FLTR<15:8>								316
ADFLTRL	FLTR<7:0>								316
FVRCON	FVREN	FVRRDY	TSEN	TSRNG	CDAFVR<1:0>		ADFVR<1:0>		285
DAC1CON1	—	—	—	DAC1R<4:0>					333
OSCSTAT	EXTOR	HFOR	MFOR	LFOR	SOR	ADOR	—	PLLR	155

Legend: — = unimplemented read as '0'. Shaded cells are not used for the ADC module.

20.0 TEMPERATURE INDICATOR MODULE (TIM)

This family of devices is equipped with a temperature circuit designed to measure the operating temperature of the silicon die. The main purpose of the temperature indicator module is to provide temperature-dependent voltage that can be measured by the Analog-to-Digital Converter.

The circuit's range of operating temperature falls between -40°C and +125°C. The circuit may be used as a temperature threshold detector or a more accurate temperature indicator, depending on the level of calibration performed. A one-point calibration allows the circuit to indicate a temperature closely surrounding that point. A two-point calibration allows the circuit to sense the entire range of temperature more accurately.

20.1 Module Operation

The temperature indicator module consists of a temperature-sensing circuit that provides a voltage to the device ADC. The analog voltage output, VTSENSE, varies inversely to the device temperature. The output of the temperature indicator is referred to as VOUT.

Figure 20-1 shows a simplified block diagram of the temperature indicator module.

FIGURE 20-1: TEMPERATURE CIRCUIT DIAGRAM

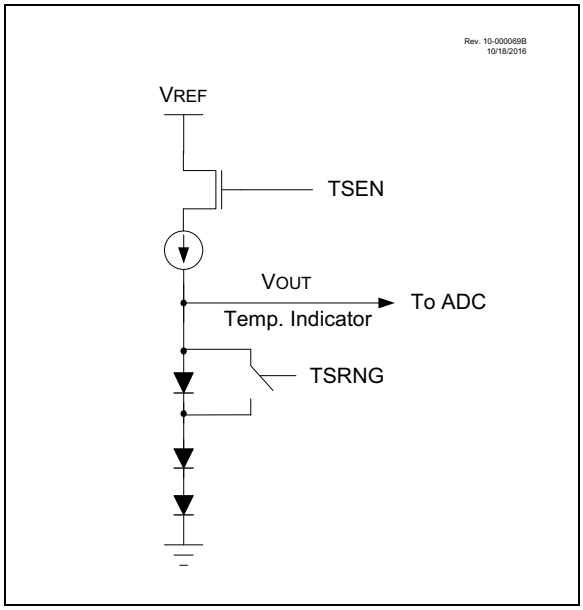

The output of the circuit is measured using the internal Analog-to-Digital Converter. A channel is reserved for the temperature circuit output. Refer to **Section 19.0 "Analog-to-Digital Converter with Computation (ADC2) Module"** for detailed information.

The ON/OFF bit for the module is located in the FVRCON register. See **Section 18.0 "Fixed Voltage Reference (FVR)"** for more information. The circuit is enabled by setting the TSEN bit of the FVRCON register. When the module is disabled, the circuit draws no current.

The circuit operates in either High or Low range. Refer to **Section 20.5 "Temperature Indicator Range"** for more details on the range settings.

20.2 Estimation of Temperature

This section describes how the sensor voltage can be used to estimate the temperature of the module. To use the sensor, the output voltage, VTSENSE, is measured and the corresponding temperature is determined. Equation 20-1 provides an estimate for the die temperature based on the VTSENSE value.

EQUATION 20-1: SENSOR TEMPERATURE

$$T_{SENSE} = V_{TSENSE} \times (-Mt) + T_{OFFSET}$$

Where:
Mt = 1/Mv, where Mv = sensor voltage sensitivity (V/°C).
TOFFSET is the temperature difference between the theoretical temperature and the actual temperature.

20.2.1 CALIBRATION

20.2.1.1 Single-Point Calibration

Single-point calibration is performed by application software using Equation 20-1 and the assumed Mt. A reading of VTSENSE at a known temperature is taken, and the theoretical temperature is calculated by temporarily setting TOFFSET = 0. Then TOFFSET is computed as the difference of the actual and calculated temperatures. Finally, TOFFSET is stored in nonvolatile memory within the device, and is applied to future readings to gain a more accurate measurement.

20.2.1.2 Higher-Order Calibration

If the application requires more precise temperature measurement, additional calibrations steps will be necessary. For these applications, two-point or three-point calibration is recommended.

Note 1:	The TOFFSET value may be determined by the user with a temperature test.
2:	Although the measurement range is -40°C to +125 °C, due to the variations in offset error, the single-point uncalibrated calculated TSENSE value may indicate a temperature from -140°C to +225°C, before the calibration offset is applied.
3:	The user must take into consideration self-heating of the device at different clock frequencies and output pin loading. For package related thermal characteristics information, refer to Table 39-13.

20.2.2 TEMPERATURE RESOLUTION

The resolution of the ADC reading, Ma (°C/count), depends on both the ADC resolution N and the reference voltage used for conversion, as shown in Equation 20-2. It is recommended to use the smallest VREF value, such as 2.048 FVR reference voltage, instead of VDD.

Note:	Refer to Table 39-17 for FVR reference voltage accuracy.

EQUATION 20-2: TEMPERATURE RESOLUTION (°C/LSb)

$$Ma = \frac{V_{REF}}{2^N} \times Mt$$

$$Ma = \frac{\frac{V_{REF}}{2^N}}{Mv}$$

Where:

Mv = sensor voltage sensitivity (V/°C)

VREF = Reference voltage of the ADC module (in Volts)

N = Resolution of the ADC

The typical Mv value for a single diode is approximately -1.267 to -1.32 mV/C.

The typical Mv value for a stack of two diodes (Low Range setting) is approximately -2.533 mV/C.

The typical Mv value for a stack of three diodes (High range setting) is approximately -3.8 mV/C.

20.3 ADC Acquisition Time

To ensure accurate temperature measurements, the user must wait a minimum of 25 µs for the ADC value to settle, after the ADC input multiplexer is connected to the temperature indicator output, before the conversion is performed.

20.4 Minimum Operating VDD

When the temperature circuit is operated in Low range, the device may be operated at any operating voltage that is within specifications. When the temperature circuit is operated in High range, the device operating voltage, VDD, must be high enough to ensure that the temperature circuit is correctly biased.

Table 20-1 shows the recommended minimum VDD vs. Range setting.

TABLE 20-1: RECOMMENDED VDD vs. RANGE

Min.VDD, TSRNG = 1 (High Range)	Min. VDD, TSRNG = 0 (Low Range)
≥ 2.5	≥ 1.8

20.5 Temperature Indicator Range

The temperature indicator circuit operates in either High or Low range. The High range, selected by setting the TSRNG bit of the FVRCON register, provides a wider output voltage. This provides more resolution over the temperature range. High range requires a higher-bias voltage to operate and thus, a higher VDD is needed. The Low range is selected by clearing the TSRNG bit of the FVRCON register. The Low range generates a lower sensor voltage and thus, a lower VDD voltage is needed to operate the circuit.

The output voltage of the sensor is the highest value at -40°C and the lowest value at +125°C.

- **High Range:** The High range is used in applications with the reference for the ADC, VREF = 2.048V. This range may not be suitable for battery-powered applications.
- **Low Range:** This mode is useful in applications in which the VDD is too low for high-range operation. The VDD in this mode can be as low as 1.8V. VDD must, however, be at least 0.5V higher than the maximum sensor voltage depending on the expected low operating temperature.

20.6 DIA Information

DIA data provide ADC readings at one operating temperature. DIA data is taken during factory testing and stored within the device. The 90°C reading alone allows single-point calibration as described in Section 20.2.1, Calibration, by solving Equation 20-1 for TOFFSET.

Refer to **Section 6.0 "Device Information Area"** for more information on the data stored in the DIA and how to access them.

Note: The lower temperature range (e.g., - 40°C) will suffer in accuracy because temperature conversion must extrapolate below the reference points, amplifying any measurement errors.

TABLE 20-2: SUMMARY OF REGISTERS ASSOCIATED WITH THE TEMPERATURE INDICATOR

Name	Bit 7	Bit 6	Bit 5	Bit 4	Bit 3	Bit 2	Bit 1	Bit 0	Register on page
FVRCON	FVREN	FVRRDY	TSEN	TSRNG	CDFVR<1:0>		ADFVR<1:0>		285

Legend: — = Unimplemented location, read as '0'. Shaded cells are unused by the temperature indicator module.

21.0 5-BIT DIGITAL-TO-ANALOG CONVERTER (DAC1) MODULE

The Digital-to-Analog Converter supplies a variable voltage reference, ratiometric with the input source, with 32 selectable output levels.

The input of the DAC can be connected to:

- External VREF pins
- VDD supply voltage
- FVR (Fixed Voltage Reference)

The output of the DAC can be configured to supply a reference voltage to the following:

- Comparator positive input
- ADC input channel
- DAC1OUT pin

The Digital-to-Analog Converter (DAC) is enabled by setting the DAC1EN bit of the DAC1CON0 register.

21.1 Output Voltage Selection

The DAC has 32 voltage level ranges. The 32 levels are set with the DAC1R<4:0> bits of the DAC1CON1 register.

The DAC output voltage is determined by Equation 21-1:

EQUATION 21-1: DAC OUTPUT VOLTAGE

$$V_{OUT} = \left(V_{SOURCE+} - V_{SOURCE-} \times \frac{DAC1R\langle 4:0\rangle}{2^5}\right) + (V_{SOURCE-})$$

$$V_{SOURCE+} = V_{DD} \text{ or } V_{REF+} \text{ or } FVR$$

$$V_{SOURCE-} = V_{SS} \text{ or } V_{REF-}$$

21.2 Ratiometric Output Level

The DAC output value is derived using a resistor ladder with each end of the ladder tied to a positive and negative voltage reference input source. If the voltage of either input source fluctuates, a similar fluctuation will result in the DAC output value.

The value of the individual resistors within the ladder can be found in Table 39-16.

21.3 DAC Voltage Reference Output

The DAC voltage can be output to the DAC1OUT1/2 pins by setting the DAC1OE1/2 bits of the DAC1CON0 register, respectively. Selecting the DAC reference voltage for output on the DAC1OUT1/2 pins automatically overrides the digital output buffer and digital input threshold detector functions, disables the weak pull-up, and disables the current-controlled drive function of that pin. Reading the DAC1OUT1/2 pin when it has been configured for DAC reference voltage output will always return a ‘0’.

Due to the limited current drive capability, a buffer must be used on the DAC voltage reference output for external connections to the DAC1OUT1/2 pins. Figure 21-2 shows an example buffering technique.

FIGURE 21-1: DIGITAL-TO-ANALOG CONVERTER BLOCK DIAGRAM

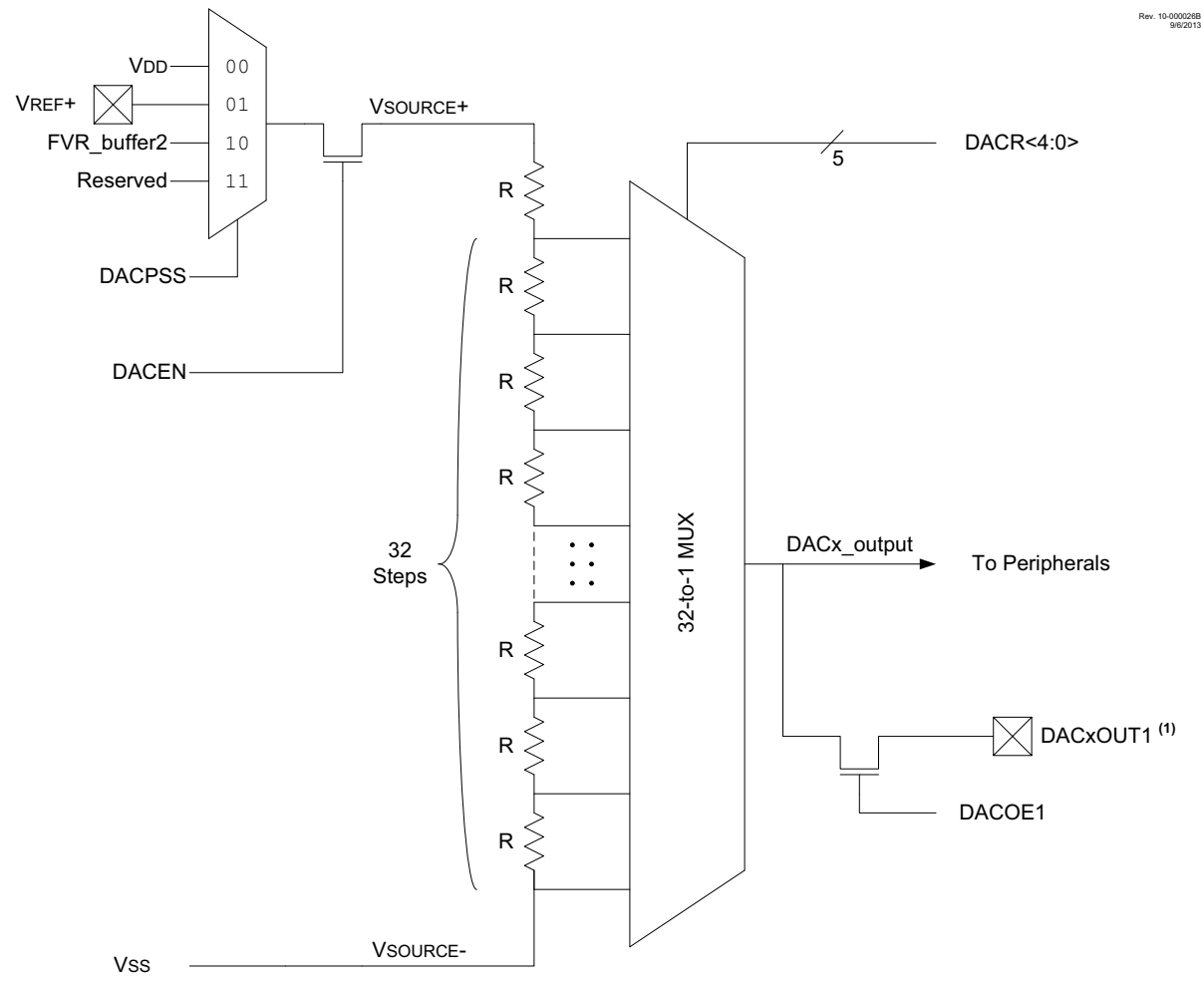

Note 1: The unbuffered DACx_output is provided on the DACxOUT pin(s).

FIGURE 21-2: VOLTAGE REFERENCE OUTPUT BUFFER EXAMPLE

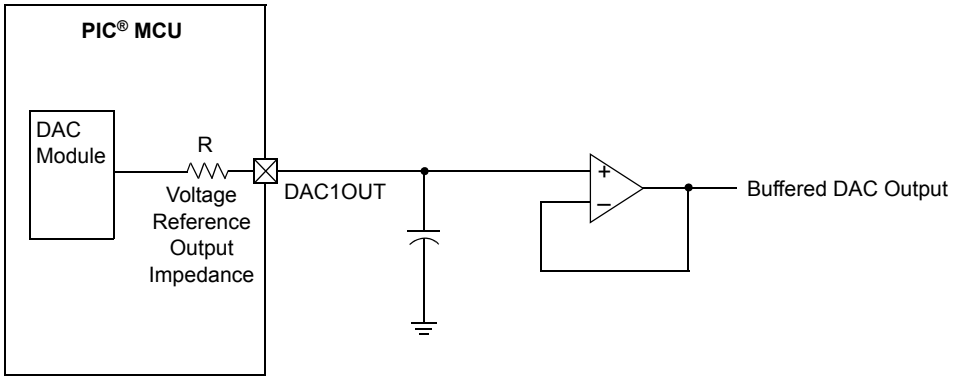

21.4 Operation During Sleep

The DAC continues to function during Sleep. When the device wakes up from Sleep through an interrupt or a Watchdog Timer time-out, the contents of the DAC1CON0 register are not affected.

21.5 Effects of a Reset

A device Reset affects the following:

- DAC is disabled.
- DAC output voltage is removed from the DAC1OUT1/2 pins.
- The DAC1R<4:0> range select bits are cleared.

21.6 Register Definitions: DAC Control

REGISTER 21-1: DAC1CON0: VOLTAGE REFERENCE CONTROL REGISTER 0

R/W-0/0	U-0	R/W-0/0	R/W-0/0	R/W-0/0	R/W-0/0	U-0	U-0
DAC1EN	—	DAC1OE1	DAC1OE2	DAC1PSS<1:0>		—	—
bit 7							bit 0

Legend:		
R = Readable bit	W = Writable bit	U = Unimplemented bit, read as ‘0’
u = Bit is unchanged	x = Bit is unknown	-n/n = Value at POR and BOR/Value at all other Resets
‘1’ = Bit is set	‘0’ = Bit is cleared	

bit 7 **DAC1EN:** DAC1 Enable bit
1 = DAC is enabled
0 = DAC is disabled

bit 6 **Unimplemented:** Read as ‘0’

bit 5 **DAC1OE1:** DAC1 Voltage Output 1 Enable bit
1 = DAC voltage level is an output on the DAC1OUT1 pin
0 = DAC voltage level is disconnected from the DAC1OUT1 pin

bit 4 **DAC1OE2:** DAC1 Voltage Output 1 Enable bit
1 = DAC voltage level is an output on the DAC1OUT2 pin
0 = DAC voltage level is disconnected from the DAC1OUT2 pin

bit 3-2 **DAC1PSS<1:0>:** DAC1 Positive Source Select bits
11 = Reserved, do not use
10 = FVR output
01 = V_{REF}+ pin
00 = V_{DD}

bit 1-0 **Unimplemented:** Read as ‘0’

REGISTER 21-2: DAC1CON1: VOLTAGE REFERENCE CONTROL REGISTER 1

U-0	U-0	U-0	R/W-0/0	R/W-0/0	R/W-0/0	R/W-0/0	R/W-0/0
—	—	—	DAC1R<4:0>				
bit 7							bit 0

Legend:		
R = Readable bit	W = Writable bit	U = Unimplemented bit, read as ‘0’
u = Bit is unchanged	x = Bit is unknown	-n/n = Value at POR and BOR/Value at all other Resets
‘1’ = Bit is set	‘0’ = Bit is cleared	

bit 7-5 **Unimplemented:** Read as ‘0’

bit 4-0 **DAC1R<4:0>:** DAC1 Voltage Output Select bits
V_{OUT} = (V_{SRC}+ - V_{SRC}-)*(DAC1R<4:0>/32) + V_{SRC}

TABLE 21-1: SUMMARY OF REGISTERS ASSOCIATED WITH THE DAC1 MODULE

Name	Bit 7	Bit 6	Bit 5	Bit 4	Bit 3	Bit 2	Bit 1	Bit 0	Register on page
DAC1CON0	DAC1EN	—	DAC1OE1	DAC1OE2	DAC1PSS<1:0>		—	—	333
DAC1CON1	—	—	—	DAC1R<4:0>					333
CM1PSEL	—	—	—	—	—	PCH<2:0>			343
CM2PSEL	—	—	—	—	—	PCH<2:0>			343

Legend: — = Unimplemented location, read as '0'. Shaded cells are not used with the DAC1 module.

22.0 COMPARATOR MODULE

Comparators are used to interface analog circuits to a digital circuit by comparing two analog voltages and providing a digital indication of their relative magnitudes. Comparators are very useful mixed signal building blocks because they provide analog functionality independent of program execution. The analog comparator module includes the following features:

- Programmable input selection
- Selectable voltage reference
- Programmable output polarity
- Rising/falling output edge interrupts
- Programmable Speed/Power optimization
- CWG1 Auto-shutdown source

22.1 Comparator Overview

A single comparator is shown in Figure 22-1 along with the relationship between the analog input levels and the digital output. When the analog voltage at VIN+ is less than the analog voltage at VIN-, the output of the comparator is a digital low level. When the analog voltage at VIN+ is greater than the analog voltage at VIN-, the output of the comparator is a digital high level.

The comparators available are shown in Table 22-1.

TABLE 22-1: AVAILABLE COMPARATORS

Device	C1	C2
PIC16(L)F19155/56/75/76/85/86	•	•

22.2 C2 Low-Power Clocked Comparator

C2 is a low-power LFINTOSC clocked comparator. On each rising edge of LFINTOSC the output state of the comparator is updated based on the states of the comparator inputs.

22.2.1 LOW POWER REFERENCE

C2 has access to a low power reference source (3.072V) used by the LCD module. If the lowest power operation is desired and a highest variation of tolerance is acceptable, the user can choose the C2 Low-Power Clocked Comparator with the LCD VREF as a positive channel input (see Comparator Positive Input Channel Select bits PCH<2:0>). See **Section 18.0 "Fixed Voltage Reference (FVR)"** for additional details.

FIGURE 22-1: SINGLE COMPARATOR

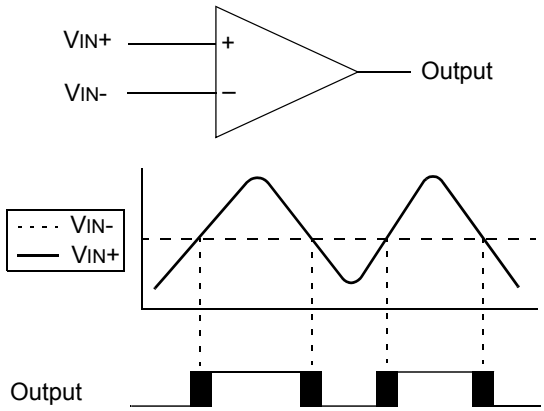

Note: The black areas of the output of the comparator represents the uncertainty due to input offsets and response time.

FIGURE 22-2: COMPARATOR MODULE SIMPLIFIED BLOCK DIAGRAM

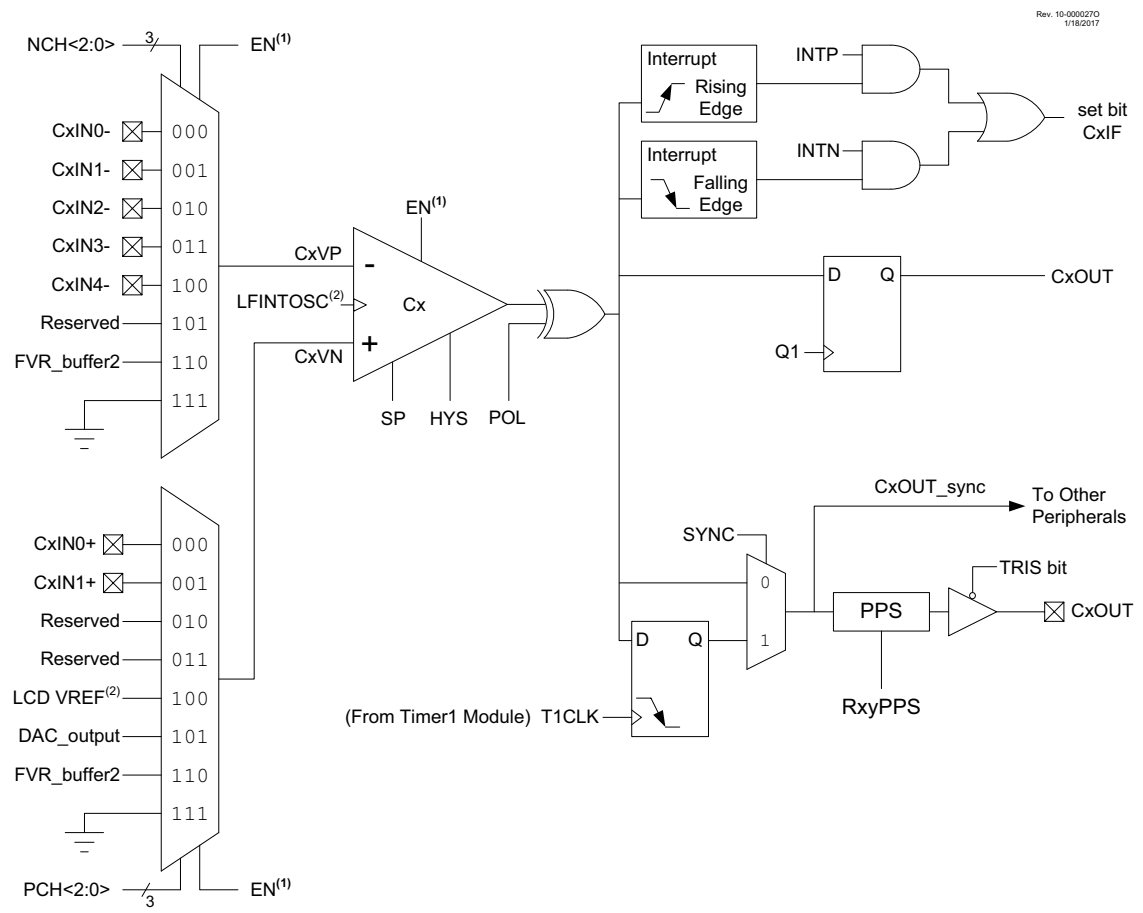

Note 1: When EN = 0, all multiplexer inputs are disconnected and the Comparator will produce a '0' at the output.
2: Applies to C2 comparator only.

22.3 Comparator Control

Each comparator has two control registers: CMxCON0 and CMxCON1.

The CMxCON0 register (see Register 22-1) contains Control and Status bits for the following:

- Enable
- Output
- Output polarity
- Hysteresis enable
- Timer1 output synchronization

The CMxCON1 register (see Register 22-2) contains Control bits for the following:

- Interrupt on positive/negative edge enables
- The CMxNSEL and CMxPSEL (Register 22-3 and Register 22-4) contain control bits for the following:
  - Positive input channel selection
  - Negative input channel selection

22.3.1 COMPARATOR ENABLE

Setting the CxON bit of the CMxCON0 register enables the comparator for operation. Clearing the CxON bit disables the comparator resulting in minimum current consumption.

Note: Setting the C2ON bit of the CM2CON0 register enables the CMP2 along with LFINTOSC. CMP2 is a clocked comparator and LFINTOSC is the clock source.

22.3.2 COMPARATOR OUTPUT

The output of the comparator can be monitored by reading either the CxOUT bit of the CMxCON0 register or the MCxOUT bit of the CMOUT register.

The comparator output can also be routed to an external pin through the RxyPPS register (Register 15-2). The corresponding TRIS bit must be clear to enable the pin as an output.

Note 1: The internal output of the comparator is latched with each instruction cycle. Unless otherwise specified, external outputs are not latched.

22.3.3 COMPARATOR OUTPUT POLARITY

Inverting the output of the comparator is functionally equivalent to swapping the comparator inputs. The polarity of the comparator output can be inverted by setting the CxPOL bit of the CMxCON0 register. Clearing the CxPOL bit results in a non-inverted output.

Table 22-2 shows the output state versus input conditions, including polarity control.

TABLE 22-2: COMPARATOR OUTPUT STATE VS. INPUT CONDITIONS

Input Condition	CxPOL	CxOUT
CxVN > CxVP	0	0
CxVN < CxVP	0	1
CxVN > CxVP	1	1
CxVN < CxVP	1	0

22.4 Comparator Hysteresis

A selectable amount of separation voltage can be added to the input pins of each comparator to provide a hysteresis function to the overall operation. Hysteresis is enabled by setting the CxHYS bit of the CMxCON0 register.

See Comparator Specifications in Table 39-14 for more information.

22.5 Timer1 Gate Operation

The output resulting from a comparator operation can be used as a source for gate control of Timer1. See **Section 26.0 "Timer1 Module with Gate Control"** for more information. This feature is useful for timing the duration or interval of an analog event.

It is recommended that the comparator output be synchronized to Timer1 by setting CMxCON0.SYNC = 1.

22.5.1 COMPARATOR OUTPUT SYNCHRONIZATION

The output from a comparator can be synchronized with Timer1 by setting the CxSYNC bit of the CMxCON0 register.

Once enabled, the comparator output is latched on the falling edge of the Timer1 source clock. If a prescaler is used with Timer1, the comparator output is latched after the prescaling function. To prevent a race condition, the comparator output is latched on the falling edge of the Timer1 clock source and Timer1 increments on the rising edge of its clock source. See the Comparator Block Diagram (Figure 22-2) and the Timer1 Block Diagram (Figure 26-1) for more information.

22.6 Comparator Interrupt

An interrupt can be generated upon a change in the output value of the comparator for each comparator, a rising edge detector and a falling edge detector are present.

When either edge detector is triggered and its associated enable bit is set (CxINTP and/or CxINTN bits of the CMxCON1 register), the Corresponding Interrupt Flag bit (CxIF bit of the PIR2 register) will be set.

To enable the interrupt, you must set the following bits:

- CxON, CxPOL and CxSP bits of the CMxCON0 register
- CxIE bit of the PIE2 register
- CxINTP bit of the CMxCON1 register (for a rising edge detection)
- CxINTN bit of the CMxCON1 register (for a falling edge detection)
- PEIE and GIE bits of the INTCON register

The associated interrupt flag bit, CxIF bit of the PIR2 register, must be cleared in software. If another edge is detected while this flag is being cleared, the flag will still be set at the end of the sequence.

Note:	Although a comparator is disabled, an interrupt can be generated by changing the output polarity with the CxPOL bit of the CMxCON0 register, or by switching the comparator on or off with the CxON bit of the CMxCON0 register.

22.7 Comparator Positive Input Selection

Configuring the CxPCH<2:0> bits of the CMxPSEL register directs an internal voltage reference or an analog pin to the noninverting input of the comparator:

- CxIN0+ analog pin
- DAC output
- FVR (Fixed Voltage Reference)
- VSS (Ground)

See **Section 18.0 "Fixed Voltage Reference (FVR)"** for more information on the Fixed Voltage Reference module.

See **Section 21.0 "5-Bit Digital-to-Analog Converter (DAC1) Module"** for more information on the DAC input signal.

Any time the comparator is disabled (CxON = 0), all comparator inputs are disabled.

22.8 Comparator Negative Input Selection

The CxNCH<2:0> bits of the CMxCON1 register direct an analog input pin and internal reference voltage or analog ground to the inverting input of the comparator:

- CxIN- pin
- FVR (Fixed Voltage Reference)
- Analog Ground

Note:	To use CxINy+ and CxINy- pins as analog input, the appropriate bits must be set in the ANSEL register and the corresponding TRIS bits must also be set to disable the output drivers.

22.9 Comparator Response Time

The comparator output is indeterminate for a period of time after the change of an input source or the selection of a new reference voltage. This period is referred to as the response time. The response time of the comparator differs from the settling time of the voltage reference. Therefore, both of these times must be considered when determining the total response time to a comparator input change. See the Comparator and Voltage Reference Specifications in Table 39-14 and Table 39-15 for more details.

22.10 Analog Input Connection Considerations

A simplified circuit for an analog input is shown in Figure 22-3. Since the analog input pins share their connection with a digital input, they have reverse biased ESD protection diodes to VDD and VSS. The analog input, therefore, must be between VSS and VDD. If the input voltage deviates from this range by more than 0.6V in either direction, one of the diodes is forward biased and a latch-up may occur.

A maximum source impedance of 1kΩ is recommended for the analog sources. Also, any external component connected to an analog input pin, such as a capacitor or a Zener diode, should have very little leakage current to minimize inaccuracies introduced.

Note 1: When reading a PORT register, all pins configured as analog inputs will read as a '0'. Pins configured as digital inputs will convert as an analog input, according to the input specification.

2: Analog levels on any pin defined as a digital input, may cause the input buffer to consume more current than is specified.

FIGURE 22-3: ANALOG INPUT MODEL

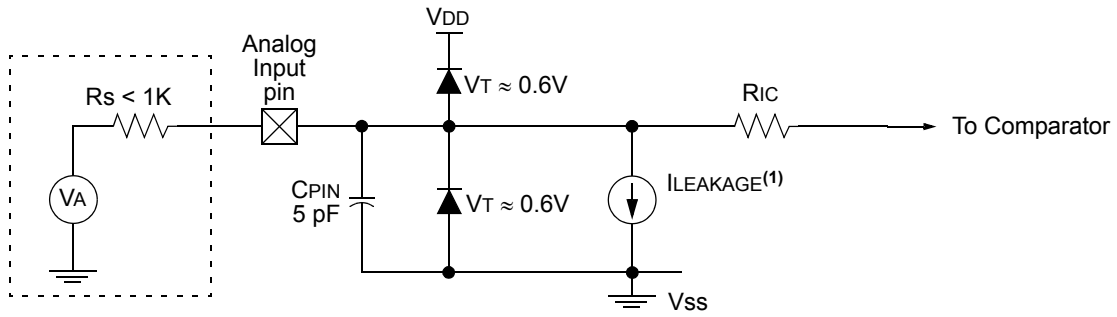

Legend: CPIN = Input Capacitance
ILEAKAGE = Leakage Current at the pin due to various junctions
RIC = Interconnect Resistance
RS = Source Impedance
VA = Analog Voltage
VT = Threshold Voltage

Note 1: See I/O Ports in Table 39-4.

22.11 CWG1 Auto-Shutdown Source

The output of the comparator module can be used as an auto-shutdown source for the CWG1 module. When the output of the comparator is active and the corresponding ASxE is enabled, the CWG operation will be suspended immediately (see **Section 31.0 "Complementary Waveform Generator (CWG) Module"**).

22.12 Operation in Sleep Mode

The comparator module can operate during Sleep, if CxCON.SYNC = 0. The comparator clock source is based on the Timer1 clock source. If CXCON.SYCN = 1 and the Timer1 clock source is either the system clock (FOSC) or the instruction clock (FOSC/4), Timer1 will not operate during Sleep, and synchronized comparator outputs will not operate.

A comparator interrupt will wake the device from Sleep. The CxIE bits of the PIE2 register must be set to enable comparator interrupts.

22.13 Register Definitions: Comparator Control

REGISTER 22-1: CMxCON0: COMPARATOR Cx CONTROL REGISTER 0

R/W-0/0	R-0/0	U-0	R/W-0/0	U-0	U-0	R/W-0/0	R/W-0/0
ON	OUT	—	POL	—	—	HYS	SYNC
bit 7							bit 0

Legend:		
R = Readable bit	W = Writable bit	U = Unimplemented bit, read as ‘0’
u = Bit is unchanged	x = Bit is unknown	-n/n = Value at POR and BOR/Value at all other Resets
‘1’ = Bit is set	‘0’ = Bit is cleared	

bit 7 **ON:** Comparator Enable bit
1 = Comparator is enabled
0 = Comparator is disabled and consumes no active power

bit 6 **OUT:** Comparator Output bit
If CxPOL = 1 (inverted polarity):
1 = CxVP < CxVN
0 = CxVP > CxVN
If CxPOL = 0 (noninverted polarity):
1 = CxVP > CxVN
0 = CxVP < CxVN

bit 5 **Unimplemented:** Read as ‘0’

bit 4 **POL:** Comparator Output Polarity Select bit
1 = Comparator output is inverted
0 = Comparator output is not inverted

bit 3-2 **Unimplemented:** Read as ‘0’

bit 1 **HYS:** Comparator Hysteresis Enable bit
1 = Comparator hysteresis enabled
0 = Comparator hysteresis disabled

bit 0 **SYNC:** Comparator Output Synchronous Mode bit
1 = Comparator output to Timer1 and I/O pin is synchronous to changes on Timer1 clock source. Output updated on the falling edge of Timer1 clock source.
0 = Comparator output to Timer1 and I/O pin is asynchronous

REGISTER 22-2: CMxCON1: COMPARATOR Cx CONTROL REGISTER 1

U-0	U-0	U-0	U-0	U-0	U-0	R/W-0/0	R/W-0/0
—	—	—	—	—	—	INTP	INTN
bit 7							bit 0

Legend:		
R = Readable bit	W = Writable bit	U = Unimplemented bit, read as ‘0’
u = Bit is unchanged	x = Bit is unknown	-n/n = Value at POR and BOR/Value at all other Resets
‘1’ = Bit is set	‘0’ = Bit is cleared	

bit 7-2 **Unimplemented:** Read as ‘0’

bit 1 **INTP:** Comparator Interrupt on Positive-Going Edge Enable bits
1 = The CxIF interrupt flag will be set upon a positive-going edge of the CxOUT bit
0 = No interrupt flag will be set on a positive-going edge of the CxOUT bit

bit 0 **INTN:** Comparator Interrupt on Negative-Going Edge Enable bits
1 = The CxIF interrupt flag will be set upon a negative-going edge of the CxOUT bit
0 = No interrupt flag will be set on a negative-going edge of the CxOUT bit

REGISTER 22-3: CMxNSEL: COMPARATOR Cx NEGATIVE INPUT SELECT REGISTER

U-0	U-0	U-0	U-0	U-0	R/W-0/0	R/W-0/0	R/W-0/0
—	—	—	—	—	NCH<2:0>		
bit 7							bit 0

Legend:		
R = Readable bit	W = Writable bit	U = Unimplemented bit, read as ‘0’
u = Bit is unchanged	x = Bit is unknown	-n/n = Value at POR and BOR/Value at all other Resets
‘1’ = Bit is set	‘0’ = Bit is cleared	

bit 7-2 **Unimplemented:** Read as ‘0’

bit 2-0 **NCH<2:0>:** Comparator Negative Input Channel Select bits
- 111 = CxVN connects to AVSS
- 110 = CxVN connects to FVR Buffer 2
- 101 = CxVN unconnected
- 100 = CxVN connects to CxIN4- pin
- 011 = CxVN connects to CxIN3- pin
- 010 = CxVN connects to CxIN2- pin
- 001 = CxVN connects to CxIN1- pin
- 000 = CxVN connects to CxIN0- pin

REGISTER 22-4: CMxPSEL: COMPARATOR Cx POSITIVE INPUT SELECT REGISTER

U-0	U-0	U-0	U-0	U-0	R/W-0/0	R/W-0/0	R/W-0/0
—	—	—	—	—	PCH<2:0>		
bit 7							bit 0

Legend:		
R = Readable bit	W = Writable bit	U = Unimplemented bit, read as ‘0’
u = Bit is unchanged	x = Bit is unknown	-n/n = Value at POR and BOR/Value at all other Resets
‘1’ = Bit is set	‘0’ = Bit is cleared	

bit 7-2 **Unimplemented:** Read as ‘0’

bit 5-3 **PCH<2:0>:** Comparator Positive Input Channel Select bits
- 111 = CxVP connects to AVSS
- 110 = CxVP connects to FVR Buffer 2
- 101 = CxVP connects to DAC output
- 100 = CxVP LCD VREF(1)
- 011 = CxVP unconnected
- 010 = CxVP unconnected
- 001 = CxVP connects to CxIN1+ pin
- 000 = CxVP connects to CxIN0+ pin

Note 1: Applies to C2 comparator only.

REGISTER 22-5: CMOUT: COMPARATOR OUTPUT REGISTER

U-0	U-0	U-0	U-0	U-0	U-0	R-0/0	R-0/0
—	—	—	—	—	—	MC2OUT	MC1OUT
bit 7							bit 0

Legend:		
R = Readable bit	W = Writable bit	U = Unimplemented bit, read as ‘0’
u = Bit is unchanged	x = Bit is unknown	-n/n = Value at POR and BOR/Value at all other Resets
‘1’ = Bit is set	‘0’ = Bit is cleared	

bit 7-2 **Unimplemented:** Read as ‘0’

bit 1 **MC2OUT:** Mirror Copy of C2OUT bit

bit 0 **MC1OUT:** Mirror Copy of C1OUT bit

TABLE 22-3: SUMMARY OF REGISTERS ASSOCIATED WITH COMPARATOR MODULE

Name	Bit 7	Bit 6	Bit 5	Bit 4	Bit 3	Bit 2	Bit 1	Bit 0	Register on Page
CMxCON0	ON	OUT	—	POL	—	—	HYS	SYNC	341
CMxCON1	—	—	—	—	—	—	INTP	INTN	342
CMOUT	—	—	—	—	—	—	MC2OUT	MC1OUT	344
FVRCON	FVREN	FVRRDY	TSEN	TSRNG	CDAFVR<1:0>		ADFVR<1:0>		285
DAC1CON0	DAC1EN	—	DAC1OE1	DAC1OE2	DAC1PSS<1:0>		—	—	333
DAC1CON1	—	—	—	DAC1R<4:0>					333
INTCON	GIE	PEIE	—					INTEDG	164
PIE2	—	ZCDIE	—	—	—	—	C2IE	C1IE	167
PIR2	—	ZCDIF	—	—	—	—	C2IF	C1IF	176
CLCINxPPS	—	—	—	CLCIN0PPS<4:0>					264
T1GPPS	—	—	—	T1GPPS<4:0>					264

Legend: — = unimplemented location, read as ‘0’. Shaded cells are unused by the comparator module.

23.0 ZERO-CROSS DETECTION (ZCD) MODULE

The ZCD module detects when an A/C signal crosses through the ground potential. The actual zero-crossing threshold is the zero-crossing reference voltage, VCPINV, which is typically 0.75V above ground.

The connection to the signal to be detected is through a series current limiting resistor. The module applies a current source or sink to the ZCD pin to maintain a constant voltage on the pin, thereby preventing the pin voltage from forward biasing the ESD protection diodes. When the applied voltage is greater than the reference voltage, the module sinks current. When the applied voltage is less than the reference voltage, the module sources current. The current source and sink action keeps the pin voltage constant over the full range of the applied voltage. The ZCD module is shown in the simplified block diagram Figure 23-2.

The ZCD module is useful when monitoring an A/C waveform for, but not limited to, the following purposes:

- A/C period measurement
- Accurate long term time measurement
- Dimmer phase delayed drive
- Low EMI cycle switching

23.1 External Resistor Selection

The ZCD module requires a current limiting resistor in series with the external voltage source. The impedance and rating of this resistor depends on the external source peak voltage. Select a resistor value that will drop all of the peak voltage when the current through the resistor is nominally 300 µA. Refer to Equation 23-1 and Figure 23-1. Make sure that the ZCD I/O pin internal weak pull-up is disabled so it does not interfere with the current source and sink.

EQUATION 23-1: EXTERNAL RESISTOR

$$R_{SERIES} = \frac{V_{PEAK}}{3 \times 10^{-4}}$$

FIGURE 23-1: EXTERNAL VOLTAGE

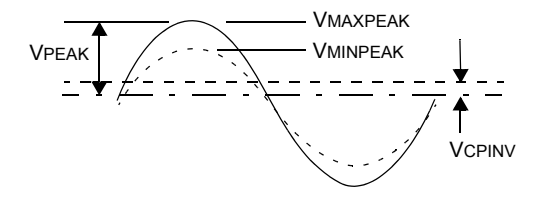

FIGURE 23-2: SIMPLIFIED ZCD BLOCK DIAGRAM

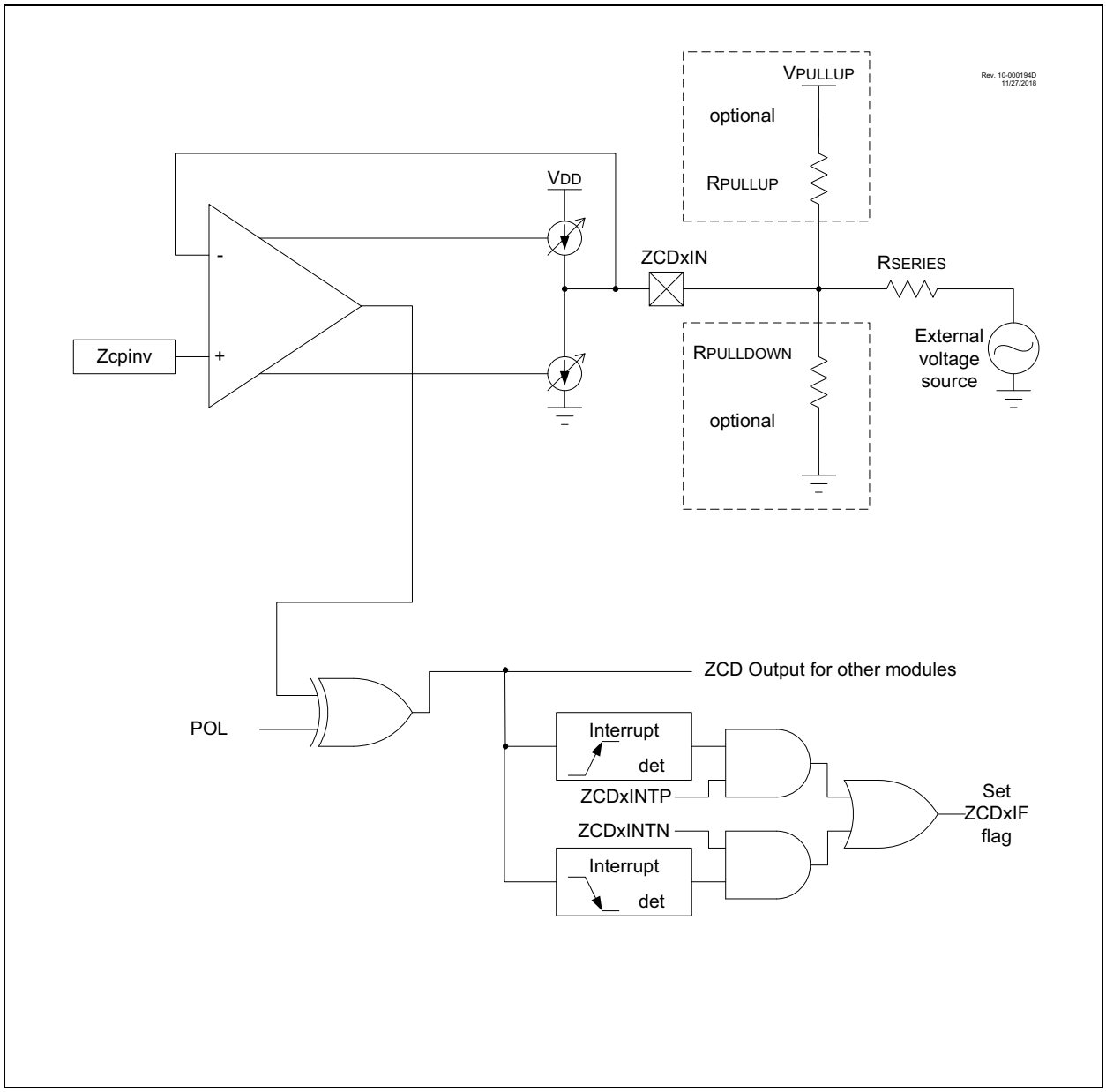

23.2 ZCD Logic Output

The ZCD module includes a Status bit, which can be read to determine whether the current source or sink is active. The OUT bit of the ZCDxCON register is set when the current sink is active, and cleared when the current source is active. The OUT bit is affected by the polarity even if the module is disabled.

23.3 ZCD Logic Polarity

The POL bit of the ZCDxCON register inverts the ZCDxOUT bit relative to the current source and sink output. When the POL bit is set, a OUT high indicates that the current source is active, and a low output indicates that the current sink is active.

The POL bit affects the ZCD interrupts. See **Section 23.4 "ZCD Interrupts"**.

23.4 ZCD Interrupts

An interrupt will be generated upon a change in the ZCD logic output when the appropriate interrupt enables are set. A rising edge detector and a falling edge detector are present in the ZCD for this purpose.

The ZCDIF bit of the PIR2 register will be set when either edge detector is triggered and its associated enable bit is set. The INTP enables rising edge interrupts and the INTN bit enables falling edge interrupts. Both are located in the ZCDxCON register.

To fully enable the interrupt, the following bits must be set:

- ZCDIE bit of the PIE2 register
- INTP bit of the ZCDxCON register (for a rising edge detection)
- INTN bit of the ZCDxCON register (for a falling edge detection)
- PEIE and GIE bits of the INTCON register

Changing the POL bit can cause an interrupt, regardless of the level of the EN bit.

The ZCDIF bit of the PIR2 register must be cleared in software as part of the interrupt service. If another edge is detected while this flag is being cleared, the flag will still be set at the end of the sequence.

23.5 Correcting for VCPINV offset

The actual voltage at which the ZCD switches is the reference voltage at the noninverting input of the ZCD op amp. For external voltage source waveforms other than square waves, this voltage offset from zero causes the zero-cross event to occur either too early or too late.

23.5.1 CORRECTION BY AC COUPLING

When the external voltage source is sinusoidal then the effects of the VCPINV offset can be eliminated by isolating the external voltage source from the ZCD pin with a capacitor in addition to the voltage reducing resistor. The capacitor will cause a phase shift resulting in the ZCD output switch in advance of the actual zero-crossing event. The phase shift will be the same for both rising and falling zero crossings, which can be compensated for by either delaying the CPU response to the ZCD switch by a timer or other means, or selecting a capacitor value large enough that the phase shift is negligible.

To determine the series resistor and capacitor values for this configuration, start by computing the impedance, Z, to obtain a peak current of 300 uA. Next, arbitrarily select a suitably large non-polar capacitor and compute its reactance, Xc, at the external voltage source frequency. Finally, compute the series resistor, capacitor peak voltage, and phase shift by the formulas shown in Equation 23-2.

EQUATION 23-2: R-C CALCULATIONS

V_{peak} = external voltage source peak voltage
f = external voltage source frequency
C = series capacitor
R = series resistor
V_C = Peak capacitor voltage
ϕ = Capacitor induced zero crossing phase advance in radians
T_ϕ = Time ZC event occurs before actual zero crossing

$$Z = \frac{V_{PEAK}}{3x10^{-4}}$$

$$X_C = \frac{1}{(2\pi fC)}$$

$$R = \sqrt{Z^2 - X_C}$$

$$V_C = X_C(3x10^{-4})$$

$$\phi = Tan^{-1}\left(\frac{X_C}{R}\right)$$

$$T_\phi = \frac{\phi}{(2\pi f)}$$

V_{rms} = 120

EXAMPLE 23-1: R-C CALCULATIONS EXAMPLE

$$V_{peak} = V_{rms} \cdot \sqrt{2} = 169.7$$

f = 60 Hz
C = 0.1 µf

$$Z = \frac{V_{peak}}{3 \times 10^{-4}} = \frac{169.7}{3 \times 10^{-4}} = 565.7\ kOhms$$

$$X_C = \frac{1}{(2\pi fC)} = \frac{1}{(2\pi \cdot 60 \cdot 1 \cdot 10^{-7})} = 26.53\ \text{kOhms}$$

R = 560 kOhms

$$Z_R = \sqrt{(R^2 + X_c{}^2)} = 560.6\ kOhm\ \text{(using actual resistor)}$$

$$I_{peak} = \frac{V_{peak}}{Z_R} = 302.7 \cdot 10^{-6}$$

$$V_C = X_C \cdot I_{peak} = 8.0\ \text{V}$$

$$\phi = Tan^{-1}\left(\frac{X_C}{R}\right) = 0.047\ radians$$

$$T_\phi = \frac{\phi}{(2\pi f)} = 125.6\ \mu s$$

23.5.2 CORRECTION BY OFFSET CURRENT

When the waveform is varying relative to VSS, then the zero-cross is detected too early as the waveform falls and too late as the waveform rises. When the waveform is varying relative to VDD, then the zero-cross is detected too late as the waveform rises and too early as the waveform falls. The actual offset time can be determined for sinusoidal waveforms with the corresponding equations shown in Equation 23-3.

EQUATION 23-3: ZCD EVENT OFFSET

When External Voltage Source is relative to Vss:

$$T_{OFFSET} = \frac{\operatorname{asin}\left(\frac{Vcpinv}{V_{PEAK}}\right)}{2\pi \bullet Freq}$$

When External Voltage Source is relative to VDD:

$$T_{OFFSET} = \frac{\operatorname{asin}\left(\frac{V_{DD}-Vcpinv}{V_{PEAK}}\right)}{2\pi \bullet Freq}$$

This offset time can be compensated for by adding a pull-up or pull-down biasing resistor to the ZCD pin. A pull-up resistor is used when the external voltage source is varying relative to VSS. A pull-down resistor is used when the voltage is varying relative to VDD. The resistor adds a bias to the ZCD pin so that the target external voltage source must go to zero to pull the pin voltage to the VCPINV switching voltage. The pull-up or pull-down value can be determined with the equation shown in Equation 23-4.

EQUATION 23-4: ZCD PULL-UP/DOWN

When External Signal is relative to Vss:

$$R_{PULLUP} = \frac{R_{SERIES}(V_{PULLUP} - Vcpinv)}{Vcpinv}$$

When External Signal is relative to VDD:

$$\left(R_{PULLDOWN} = \frac{R_{SERIES} \times (Vcpinv)}{(V_{DD} - Vcpinv)}\right)$$

23.6 Handling VPEAK variations

If the peak amplitude of the external voltage is expected to vary, the series resistor must be selected to keep the ZCD current source and sink below the design maximum range of ± 600 μA and above a reasonable minimum range. A general rule of thumb is that the maximum peak voltage can be no more than six times the minimum peak voltage. To ensure that the maximum current does not exceed ± 600 μA and the minimum is at least ± 100 μA, compute the series resistance as shown in Equation 23-5. The compensating pull-up for this series resistance can be determined with Equation 23-4 because the pull-up value is not dependent from the peak voltage.

EQUATION 23-5: SERIES R FOR V RANGE

$$R_{SERIES} = \frac{V_{MAXPEAK} + V_{MINPEAK}}{7 \times 10^{-4}}$$

23.7 Operation During Sleep

The ZCD current sources and interrupts are unaffected by Sleep.

23.8 Effects of a Reset

The ZCD circuit can be configured to default to the active or inactive state on Power-on-Reset (POR). When the ZCDDIS Configuration bit is cleared, the ZCD circuit will be active at POR. When the $\overline{\text{ZCD}}$ Configuration bit is set, the EN bit of the ZCDxCON register must be set to enable the ZCD module.

23.9 Register Definitions: ZCD Control

REGISTER 23-1: ZCDCON: ZERO-CROSS DETECTION CONTROL REGISTER

R/W-q/q	U-0	R-x/x	R/W-0/0	U-0	U-0	R/W-0/0	R/W-0/0
SEN	—	OUT	POL	—	—	INTP	INTN
bit 7							bit 0

Legend:		
R = Readable bit	W = Writable bit	U = Unimplemented bit, read as ‘0’
u = Bit is unchanged	x = Bit is unknown	-n/n = Value at POR and BOR/Value at all other Resets
‘1’ = Bit is set	‘0’ = Bit is cleared	q = value depends on Configuration bits

bit 7 **SEN**: Zero-Cross Detection Enable bit
1 = Zero-cross detect is enabled. ZCD pin is forced to output to source and sink current.
0 = Zero-cross detect is disabled. ZCD pin operates according to PPS and TRIS controls.

bit 6 **Unimplemented:** Read as ‘0’

bit 5 **OUT:** Zero-Cross Detection Logic Level bit
POL bit = 1**:**
1 = ZCD pin is sourcing current
0 = ZCD pin is sinking current
POL bit = 0**:**
1 = ZCD pin is sinking current
0 = ZCD pin is sourcing current

bit 4 **POL:** Zero-Cross Detection Logic Output Polarity bit
1 = ZCD logic output is inverted
0 = ZCD logic output is not inverted

bit 3-2 **Unimplemented:** Read as ‘0’

bit 1 **INTP:** Zero-Cross Positive Edge Interrupt Enable bit
1 = ZCDIF bit is set on low-to-high ZCDx_output transition
0 = ZCDIF bit is unaffected by low-to-high ZCDx_output transition

bit 0 **INTN:** Zero-Cross Negative Edge Interrupt Enable bit
1 = ZCDIF bit is set on high-to-low ZCDx_output transition
0 = ZCDIF bit is unaffected by high-to-low ZCDx_output transition

TABLE 23-1: SUMMARY OF REGISTERS ASSOCIATED WITH THE ZCD MODULE

Name	Bit 7	Bit 6	Bit 5	Bit 4	Bit 3	Bit 2	Bit 1	Bit 0	Register on page
PIE3	RC2IE	TX2IE	RC1IE	TX1IE	—	—	BCL1IE	SSP1IE	168
PIR3	RC2IF	TX2IF	RC1IF	TX1IF	—	—	BCL1IF	SSP1IF	177
ZCDxCON	SEN	—	OUT	POL	—	—	INTP	INTN	350

Legend: — = unimplemented, read as ‘0’. Shaded cells are unused by the ZCD module.

TABLE 23-2: SUMMARY OF CONFIGURATION WORD WITH THE ZCD MODULE

Name	Bits	Bit -/7	Bit -/6	Bit 13/5	Bit 12/4	Bit 11/3	Bit 10/2	Bit 9/1	Bit 8/0	Register on Page
CONFIG2	13:8	—	—	$\overline{\text{DEBUG}}$	STVREN	PPS1WAY	ZCDDIS	BORV	—	121
	7:0	BOREN <1:0>		$\overline{\text{LPBOREN}}$	—	—	—	$\overline{\text{PWRTE}}$	MCLRE	

Legend: — = unimplemented location, read as ‘0’. Shaded cells are not used by the ZCD module.

24.0 REAL-TIME CLOCK AND CALENDAR (RTCC)

The PIC16(L)F19155/56/75/76/85/86 family of devices is equipped with a Real-Time Clock and Calendar (RTCC) module, designed to maintain accurate time measurement for extended periods, with little or no intervention from the CPU. The module is optimized for low-power operation in order to provide extended battery life. The key features include:

- Time: Hours, Minutes and Seconds
- 24-hour Format
- Calendar: Weekday, Date, Month and Year
- Year Range: 2000 to 2099
- Leap Year Correction
- Configurable Alarm
- BCD Format for Compact Firmware
- Half-second Synchronization and Visibility
- User Calibration with Auto-Adjust
- Multiple Clock Sources
- Low-Power Optimization

Figure 24-1 is a simplified block diagram of the RTCC module.

FIGURE 24-1: RTCC BLOCK DIAGRAM

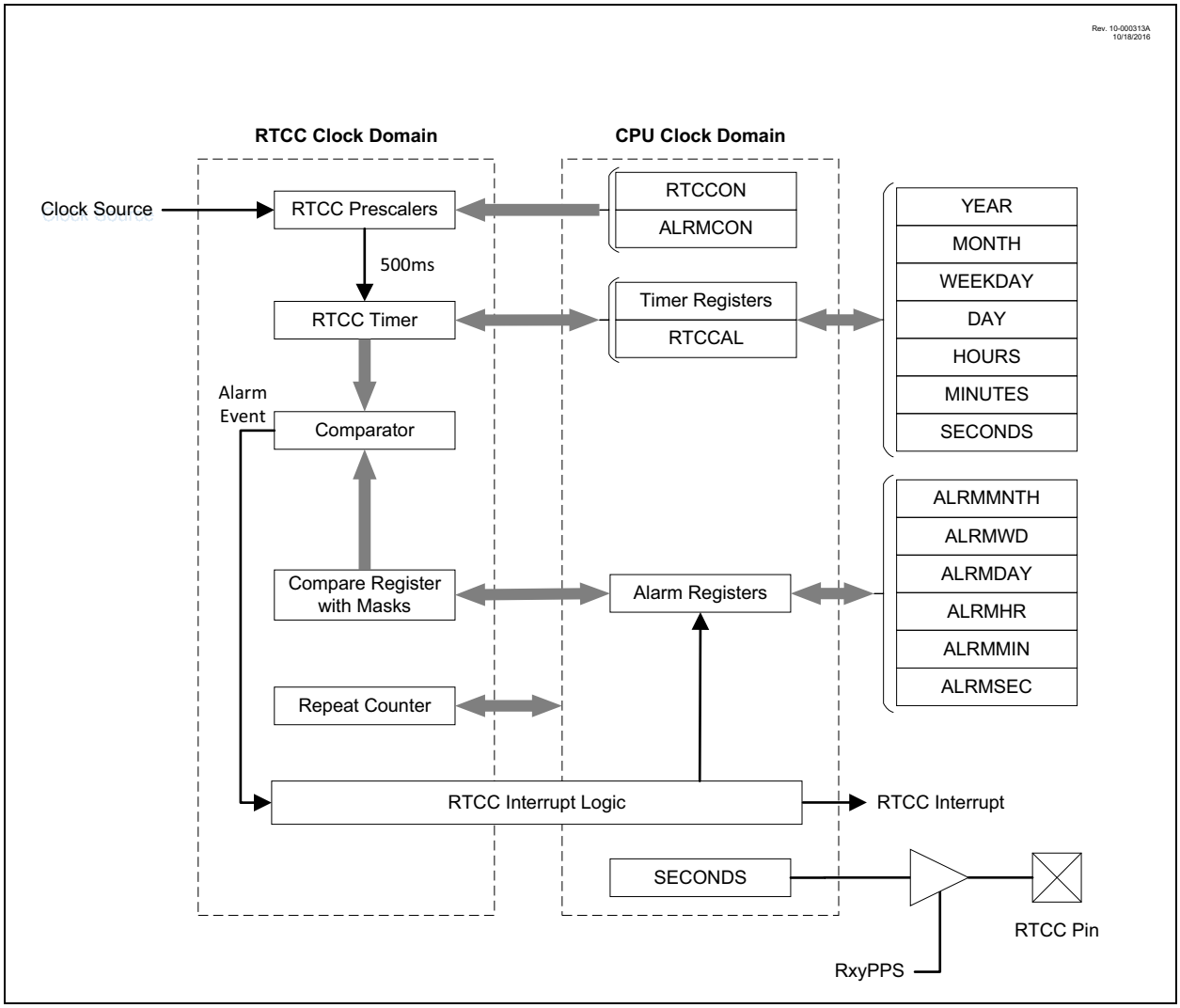

24.1 OPERATION

The RTCC consists of a 100-year clock and calendar with automatic leap year detection. The range of the clock is from 00:00:00 (midnight) on January 1st, 2000 to 23:59:59 on December 31st, 2099.

The hours use the 24-hour time format with no hardware provisions for regular time format (AM/PM). The clock provides a granularity of one second with additional visibility to the half-second.

The user has visibility to the half second field of the counter. This value is read-only and can be reset only by writing to the lower half of the SECONDS register.

24.1.1 REGISTER INTERFACE

The RTCC register set is divided into the following categories:

Control Registers

- RTCCON
- RTCCAL
- ALRMCON
- ALRMRPT

Clock Value Registers

- YEAR
- MONTH
- DAY
- WEEKDAY
- HOURS
- MINUTES
- SECONDS

Alarm Value Registers

- ALRMMNTH
- ALRMDAY
- ALRMWD
- ALRMHR
- ALRMMIN
- ALRMSEC

Note:	The WEEKDAY register is not automatically derived from the date, but it must be correctly set by the user.

The register interface for the RTCC and alarm values is implemented using the Binary Coded Decimal (BCD) format. This simplifies the firmware when using the module, as each of the digits is contained within its own 4-bit value (see Figure 24-2 and Figure 24-3).

All timer registers containing a value of seconds or greater are writable. The user can configure the initial start date and time by writing the year, month, day, hour, minutes and seconds into the clock value registers and the timer will then proceed to count from the newly written values.

The RTCC module is enabled by setting the RTCEN bit (RTCCON<7>). Once the RTCC is enabled, the timer will continue incrementing, even while the clock value registers are being re-written. However, any time the SECONDS register is written to, all of the clock value prescalers are reset to '0'. This allows lower granularity of timer adjustments.

The Timer registers are updated in the same cycle as the `WRITE` instruction's execution by the CPU. The user must ensure that when RTCEN = `1`, the updated registers will not be incremented at the same time. This can be accomplished in several ways:

- By checking the RTCSYNC bit (RTCCON<4>)
- By checking the preceding digits from which a carry can occur
- By updating the registers immediately following the seconds pulse (or alarm interrupt)

24.1.2 WRITE LOCK

To perform a write to any of the RTCC timer registers, the RTCWREN bit must be set. To avoid accidental writes to the timer, it is recommended that the RTCWREN bit is kept clear at any other time.

The RTCEN bit can only be written to when RTCWREN = `1`. A write attempt to this bit while RTCWREN = `0` will be ignored. The RTCC timer registers can be written with RTCEN = `0` or `1`.

The RTCEN bit of the RTCCON register is synchronized to the SOSC and will not be set until the external oscillator is available. The first time that the RTCEN bit is set, there could be a delay between when the bit is set in software and when the bit is set in the RTCCON register, if an external crystal is used as the clock source.

This potential delay is based upon the start-up time of the crystal, as the RTCEN bit of the RTCCON register will not set until the external oscillator is stable and ready. The start-up time of the specific external crystal must be considered when initializing the RTCC module to ensure that the RTCC module is enabled before the RTCWREN bit is cleared. It is recommended that the RTCEN bit be polled after setting it to ensure that it is truly set before clearing the RTCWREN bit.

FIGURE 24-2: BINARY CODED DECIMAL (BCD) TIMER DIGIT FORMAT

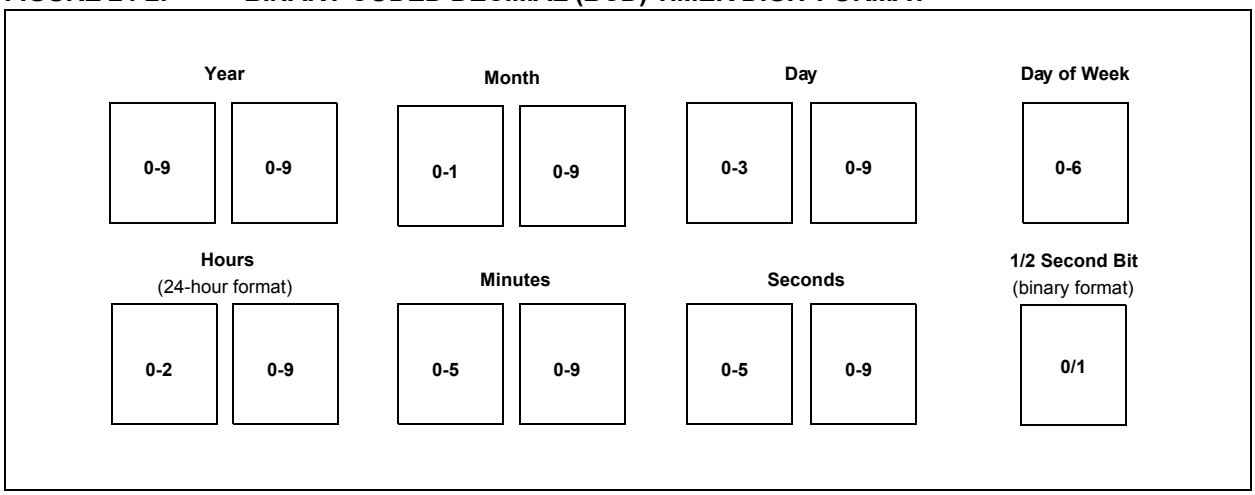

FIGURE 24-3: BINARY CODED DECIMAL (BCD) ALARM DIGIT FORMAT

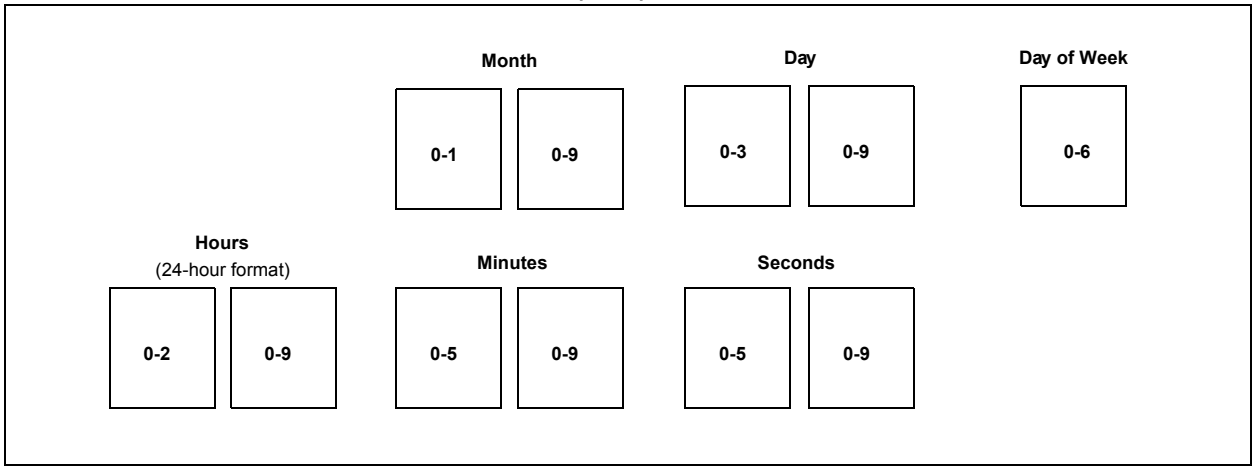

24.1.3 CLOCK SOURCES

The RTCC module can be clocked by either an external Real-Time Clock crystal oscillating at 32.768 kHz, MFINTOSC/16 (31.25 kHz) or via the ZCD at 50 Hz or 60 Hz. Each clock selection has a fixed prescaler in order to generate the required half-second clock needed by the RTCC. They are as follows:

- SOSC (32.768 kHz) = 1:16384
- MFINTOSC/16 (31.25 kHz) = 1:15625
- ZCD (50 Hz) = 1:25
- ZCD (60 Hz) = 1:30

> **Note:** Oscillator accuracy is not the same as the accuracy of an external crystal. Refer to Figure 39-6 for more information.

Calibration of the RTCC can be performed to yield an error of three seconds or less per month (see **Section 24.1.7 "Calibration"** for more information).

FIGURE 24-4: CLOCK SOURCE MULTIPLEXING

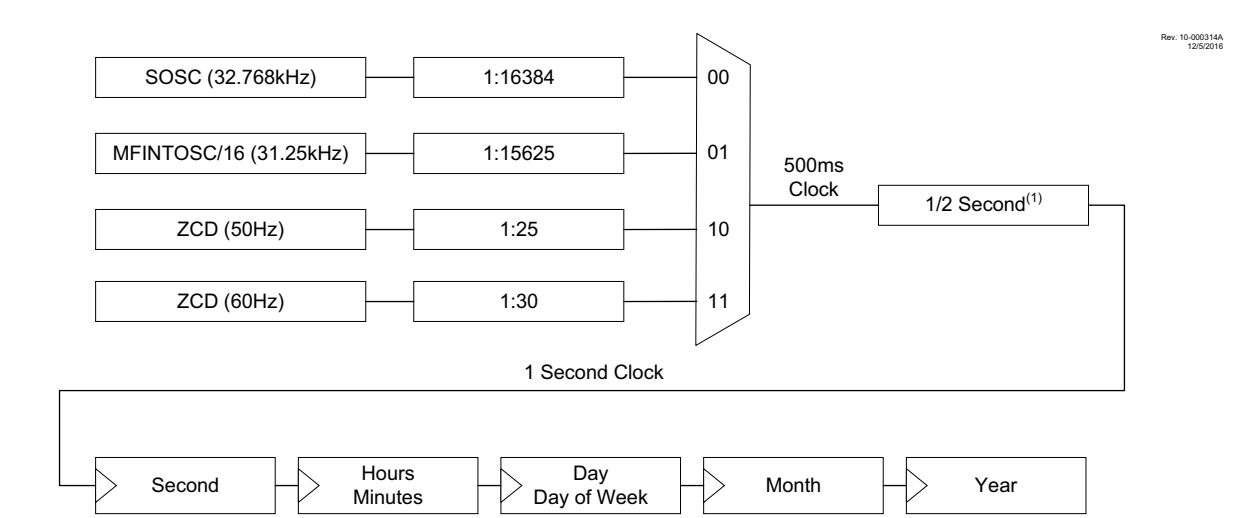

Note 1: Writing to the SECONDS register resets all counters, allowing for fraction of a second synchronization.

24.1.4 DIGIT CARRY RULES

This section explains which timer values are affected when there is a rollover.

- Time of Day: From 23:59:59 to 00:00:00 with a carry to the Day and Weekday field
- Month: From 12/31 to 01/01 with a carry to the Year field
- Day of Week: From 6 to 0 with no carry (see Table 24-1)
- Year Carry: From 99 to 00; this also surpasses the use of the RTCC

For the day to month rollover schedule, see Table 24-2.

Because the values are in BCD format, the carry to the upper BCD digit will occur at a count of 10 and not at 16 (SECONDS, MINUTES, HOURS, WEEKDAY, DAYS and MONTHS).

TABLE 24-1: DAY OF WEEK SCHEDULE

Day of Week	
Sunday	0
Monday	1
Tuesday	2
Wednesday	3
Thursday	4
Friday	5
Saturday	6

TABLE 24-2: DAY TO MONTH ROLLOVER SCHEDULE

Month	Maximum Day Field
01 (January)	31
02 (February)	28 or 29(1)
03 (March)	31
04 (April)	30
05 (May)	31
06 (June)	30
07 (July)	31
08 (August)	31
09 (September)	30
10 (October)	31
11 (November)	30
12 (December)	31

Note 1: See **Section 24.1.5 "Leap Year"**.

24.1.5 LEAP YEAR

Since the year range on the RTCC module is 2000 to 2099, the leap year calculation is determined by any year divisible by four in the above range. Only February is effected in a leap year.

February will have 29 days in a leap year and 28 days in any other year.

> **Note:** The corresponding counters are clocked based on their defined intervals (i.e., the DAYS register is clocked once a day, the MONTHS register is only clocked once a month, etc.). This leaves large windows of time during which registers can be safely updated.

24.1.6 SAFETY WINDOW FOR REGISTER READS AND WRITES

The RTCSYNC bit indicates a time window during which the RTCC Clock Domain registers (see Figure 24-1) can be safely read and written without concern about a rollover. When RTCSYNC = 0, the registers can be safely accessed by the CPU.

Whether RTCSYNC = 1 or 0, the user should employ a firmware solution to ensure that the data read did not fall on a rollover boundary, resulting in an invalid or partial read. This firmware solution would consist of reading each register twice and then comparing the two values. If the two values matched, then, a rollover did not occur.

The Status bit is set a number of clock edges before a rollover is about to occur, as follows:

- RTCCLKSEL<1:0> = 00: 32 SOSC clock cycles
- RTCCLKSEL<1:0> = 01: 32 MFINTOSC/16 clock cycles
- RTCCLKSEL<1:0> = 10: 1 50 Hz clock cycle (ZCD)
- RTCCLKSEL<1:0> = 11: 1 60 Hz clock cycle (ZCD)

The RTCSYNC bit is cleared at the time the rollover occurs. Assuming that the device uses the 32.768 kHz oscillator as the device clock (RTCCLKSEL<1:0> = 00), the 32 clock edges allow execution of approximately 1 millisecond following a read of the RTCSYNC of '0' (a period of time is lost due to bit synchronization).

24.1.7 CALIBRATION

The real-time crystal input can be calibrated using the periodic auto-adjust feature. When properly calibrated, the RTCC can provide an error of less than three seconds per month.

This is accomplished by finding the number of error clock pulses and storing the value into the RTCCAL register. The 8-bit signed value loaded into RTCCAL is multiplied by four and will either be added or subtracted from the RTCC timer, once every minute.

> **Note:** The RTCC 1/2 second clock signal can be brought out to a pin via PPS. See **Section 15.0 "Peripheral Pin Select (PPS) Module"** and Table 15-3.

To calibrate the RTCC module refer to the steps below:

1. The user must first find the error of the timer source being used.
2. Once the error is known, it must be converted to the number of error clock pulses per minute (see Equation 24-1).

EQUATION 24-1: CONVERTING ERROR CLOCK PULSES

$$(\text{Ideal Frequency } (32{,}768) - \text{Measured Frequency}) * 60 = \text{Error Clocks per Minute}$$

   - If the oscillator is *faster* than ideal (negative result from Step 2), the RTCCAL register value needs to be negative. This causes the specified number of clock pulses to be subtracted from the timer counter, once every minute.
   - If the oscillator is *slower* than ideal (positive result from Step 2), the RTCCAL register value needs to be positive. This causes the specified number of clock pulses to be added to the timer counter, once every minute.
3. Load the RTCCAL register with the value.

Writes to the RTCCAL register should occur only when the timer is turned off, or immediately after the rising edge of the seconds pulse, except when SECONDS = 00, 15, 30 or 45 due to the possibility of the auto-adjust event.

> **Note:** When determining the crystal's error value, the user should take into account the crystal's initial error from drift due to temperature or crystal aging.

24.2 Alarm

The alarm features and characteristics are:

- Configurable from half a second to one year
- Enabled using the ALRMEN bit (ALRMCON<7>, Register 24-10)
- Offers one time and repeat alarm options

24.2.1 CONFIGURING THE ALARM

The alarm feature is enabled using the ALRMEN bit.

This bit is cleared when an alarm is issued. The bit will not be cleared if the CHIME bit = 1.

The interval selection of the alarm is configured through the ALRMCFG (AMASK<3:0>) bits (see Figure 24-5). These bits determine which and how many digits of the alarm must match the clock value for the alarm to occur.

The number of times this occurs, after the alarm is enabled, is stored in the lower half of the ALRMRPT register.

> **Note:** While the alarm is enabled (ALRMEN = 1), changing any of the registers, other than the ALRMRPT register, and the CHIME bit, can result in a false alarm event leading to a false alarm interrupt. To avoid a false alarm event, the timer and alarm values should only be changed while the alarm is disabled (ALRMEN = 0). It is recommended that the ALRMRPT register and CHIME bit be changed when RTCSYNC = 0.

FIGURE 24-5: ALARM MASK SETTINGS

Alarm Mask Setting AMASK<3:0>	Day of the Week	Month	Day	Hours	Minutes	Seconds
0000 – Every half second 0001 – Every second						
0010 – Every 10 seconds						s
0011 – Every minute						s s
0100 – Every 10 minutes					m	s s
0101 – Every hour					m m	s s
0110 – Every day				h h	m m	s s
0111 – Every week	d			h h	m m	s s
1000 – Every month			d d	h h	m m	s s
1001 – Every year(1)		m m	d d	h h	m m	s s

Note 1: Annually, except when configured for February 29.

When ALRMRPT = 00 and the CHIME bit = 0 (ALRMCON), the repeat function is disabled and only a single alarm will occur. The alarm can be repeated up to 255 times by loading the ALRMRPT register with FFh with the CHIME bit = 1.

After each alarm is issued, the ALRMRPT register is decremented by one. Once the register has reached '00', the alarm will be issued one last time. After the alarm is issued a last time, the ALRMEN bit is cleared automatically and the alarm turned off.

Indefinite repetition of the alarm can occur if the CHIME bit = 1. Instead of the alarm being disabled when the ALRMRPT register reaches '00', it will roll over to FFh and continue counting when CHIME = 1.

24.2.2 ALARM INTERRUPT

At every alarm event, an interrupt is generated and the RTCCIF bit is set. Additionally, an alarm pulse output is provided that operates at half the frequency of the alarm.

The alarm pulse output is completely synchronous with the RTCC clock and can be used as a trigger clock to other peripherals.

24.3 VBAT Operation

This device is equipped with a VBAT pin that allows the user to connect an external battery or Supercap. In the event of the VDD supply failing or dropping below the supply voltage level on the VBAT pin, the power source connected to the VBAT pin will keep the SOSC and RTCC blocks running. VBAT is enabled via the VBATEN bit in Configuration Word 1.

24.4 Sleep Mode

The timer and alarm continue to operate while in Sleep mode. The operation of the alarm is not affected by Sleep, as an alarm event can always wake-up the CPU. Idle mode does not affect the operation of the timer or alarm.

24.5 Resets

The RTCCON and RTCCAL registers are only reset on a POR or BOR event. Only a POR or BOR event will turn the RTCC module off if VBAT is invalid.

If the VBAT module is enabled and active during a POR or BOR, the RTCCON and RTCCAL registers will not reset. The RTCC module will continue with normal operation during the reset.

The timer prescaler values can only be reset by writing to the SECONDS register. No device reset will affect the prescaler values.

24.6 RTCC Control Registers

REGISTER 24-1: RTCCON: RTC CONTROL REGISTER

R/W-0/u	U-0	R/W-0/u	R-0/u	R-0/u	U-0	R/W-0/u	R/W-0/u
RTCEN(1)	—	RTCWREN	RTCSYNC	HALFSEC(2)	—	RTCCLKSEL1	RTCCLKSEL0
bit 7							bit 0

Legend:			
R = Readable bit	W = Writable bit	U = Unimplemented bit, read as ‘0’	u = Bit is unchanged
-n = Value at POR	‘1’ = Bit is set	‘0’ = Bit is cleared	x = Bit is unknown

bit 7 **RTCEN:** RTCC Enable bit(1)
1 = RTCC module is enabled
0 = RTCC module is disabled

bit 6 **Unimplemented:** Read as ‘0’

bit 5 **RTCWREN:** RTCC Value Registers Write Enable bit
1 = RTCC registers can be written to by the user
0 = RTCC registers are locked out from being written to by the user

bit 4 **RTCSYNC:** RTCC Value Registers Read Synchronization bit
1 = RTCC registers can change while reading due to a rollover ripple resulting in an invalid data read; if the register is read twice and results in the same data, the data can be assumed to be valid.
0 = RTCC registers can be read without concern over a rollover ripple

bit 3 **HALFSEC:** Half-Second Status bit(2)
1 = Second half period of a second
0 = First half period of a second

bit 2 **Unimplemented:** Read as ‘0’

bit 1-0 **RTCCLKSEL<1:0>:** RTC Clock Source Selection bits
00 = SOSC (expected to 32.768 kHz)
01 = MFINTOSC/16 (31.25 kHz)
10 = 50 Hz Powerline Clock (Zero-Cross Detect)
11 = 60 Hz Powerline Clock (Zero-Cross Detect)

Note 1: A write to the RTCEN bit is only allowed when RTCWREN = 1.
2: This bit is read-only. It is cleared to ‘0’ on a write to the SECONDS register.

REGISTER 24-2: RTCCAL: RTC CALIBRATION REGISTER

R/W-0/u	R/W-0/u	R/W-0/u	R/W-0/u	R/W-0/u	R/W-0/u	R/W-0/u	R/W-0/u
CAL7	CAL6	CAL5	CAL4	CAL3	CAL2	CAL1	CAL0
bit 7							bit 0

Legend:			
R = Readable bit	W = Writable bit	U = Unimplemented bit, read as ‘0’	u = Bit is unchanged
-n = Value at POR	‘1’ = Bit is set	‘0’ = Bit is cleared	x = Bit is unknown

bit 7-0 **CAL<7:0>:** RTC Drift Calibration bits
`01111111` = Maximum positive adjustment; adds 508 RTC clock pulses every one minute
.
.
.
`00000001` = Minimum positive adjustment; adds four RTC clock pulses every one minute
`00000000` = No adjustment
`11111111` = Minimum negative adjustment; subtracts four RTC clock pulses every one minute
.
.
.
`10000000` = Maximum negative adjustment; subtracts 512 RTC clock pulses every one minute

REGISTER 24-3: YEAR(1): YEAR VALUE REGISTER

R/W-x	R/W-x	R/W-x	R/W-x	R/W-x	R/W-x	R/W-x	R/W-x
YEARH<3:0>				YEARL<3:0>			
bit 7							bit 0

Legend:			
R = Readable bit	W = Writable bit	U = Unimplemented bit, read as ‘0’	
-n = Value at POR	‘1’ = Bit is set	‘0’ = Bit is cleared	x = Bit is unknown

bit 7-4 **YEARH<3:0>:** Binary Coded Decimal value of years ‘10’ digit; contains a value from 0 to 9
bit 3-0 **YEARL<3:0>:** Binary Coded Decimal value of years ‘1’ digit; contains a value from 0 to 9

Note 1: Writes to the YEAR register is only allowed when RTCWREN = `1`.

REGISTER 24-4: MONTH(1): MONTH VALUE REGISTER

U-0	U-0	U-0	R/W-x	R/W-x	R/W-x	R/W-x	R/W-x
—	—	—	MONTHH	MONTHL<3:0>			
bit 7							bit 0

Legend:			
R = Readable bit	W = Writable bit	U = Unimplemented bit, read as ‘0’	
-n = Value at POR	‘1’ = Bit is set	‘0’ = Bit is cleared	x = Bit is unknown

bit 7-5 **Unimplemented:** Read as ‘`0`’
bit 4 **MONTHH<0>:** Binary Coded Decimal value of months ‘10’ digit; valid values from 0 to 1
bit 3-0 **MONTHL<3:0>:** Binary Coded Decimal value of months ‘1’ digit; valid values from 0 to 9

Note 1: Writes to the MONTH registers are only allowed when RTCWREN = `1`.

REGISTER 24-5: WEEKDAY(1): WEEKDAY VALUE REGISTER

U-0	U-0	U-0	U-0	U-0	R/W-x	R/W-x	R/W-x
—	—	—	—	—	WDAY<2:0>		
bit 7							bit 0

Legend:			
R = Readable bit	W = Writable bit	U = Unimplemented bit, read as ‘0’	
-n = Value at POR	‘1’ = Bit is set	‘0’ = Bit is cleared	x = Bit is unknown

bit 7-3 **Unimplemented:** Read as ‘0’

bit 2-0 **WDAY<2:0>:** Binary Coded Decimal value of weekdays ‘1’ digit; valid values from 0 to 6

Note 1: Writes to the WDAY registers are only allowed when RTCWREN = 1.

REGISTER 24-6: DAY(1): DAY VALUE REGISTER

U-0	U-0	R/W-x	R/W-x	R/W-x	R/W-x	R/W-x	R/W-x
—	—	DAYH<1:0>		DAYL<3:0>			
bit 7							bit 0

Legend:			
R = Readable bit	W = Writable bit	U = Unimplemented bit, read as ‘0’	
-n = Value at POR	‘1’ = Bit is set	‘0’ = Bit is cleared	x = Bit is unknown

bit 7-6 **Unimplemented:** Read as ‘0’

bit 5-4 **DAYH<1:0>:** Binary Coded Decimal value of days ‘10’ digit; valid values from 0 to 3

bit 3-0 **DAYL<3:0>:** Binary Coded Decimal value of days ‘1’ digit; valid values from 0 to 9

Note 1: Writes to the DAY registers are only allowed when RTCWREN = 1.

REGISTER 24-7: HOURS(1): HOUR VALUE REGISTER

U-0	U-0	R/W-x	R/W-x	R/W-x	R/W-x	R/W-x	R/W-x
—	—	HRH<1:0>		HRL<3:0>			
bit 7							bit 0

Legend:			
R = Readable bit	W = Writable bit	U = Unimplemented bit, read as ‘0’	
-n = Value at POR	‘1’ = Bit is set	‘0’ = Bit is cleared	x = Bit is unknown

bit 7-6 **Unimplemented:** Read as ‘0’

bit 5-4 **HRH<1:0>:** Binary Coded Decimal value of hours ‘10’ digit; valid values from 0 to 2

bit 3-0 **HRL<3:0>:** Binary Coded Decimal value of hours ‘1’ digit; valid values from 0 to 9

Note 1: Writes to the HOURS registers are only allowed when RTCWREN = 1.

REGISTER 24-8: MINUTES(1): MINUTE VALUE REGISTER

U-0	R/W-x	R/W-x	R/W-x	R/W-x	R/W-x	R/W-x	R/W-x
—	MINH<2:0>			MINL<3:0>			
bit 7							bit 0

Legend:			
R = Readable bit	W = Writable bit	U = Unimplemented bit, read as ‘0’	
-n = Value at POR	‘1’ = Bit is set	‘0’ = Bit is cleared	x = Bit is unknown

bit 7 **Unimplemented:** Read as ‘0’

bit 6-4 **MINH<2:0>:** Binary Coded Decimal value of minutes ‘10’ digit; valid values from 0 to 5

bit 3-0 **MINL<3:0>:** Binary Coded Decimal value of minutes ‘1’ digit; valid values from 0 to 9

Note 1: Writes to the MINUTE registers are only allowed when RTCWREN = 1.

REGISTER 24-9: SECONDS(1): SECOND VALUE REGISTER

U-0	R/W-x	R/W-x	R/W-x	R/W-x	R/W-x	R/W-x	R/W-x
—	SECH<2:0>			SECL<3:0>			
bit 7							bit 0

Legend:			
R = Readable bit	W = Writable bit	U = Unimplemented bit, read as ‘0’	
-n = Value at POR	‘1’ = Bit is set	‘0’ = Bit is cleared	x = Bit is unknown

bit 7 **Unimplemented:** Read as ‘0’

bit 6-4 **SECH<2:0>:** Binary Coded Decimal value of seconds ‘10’ digit; valid values from 0 to 5

bit 3-0 **SECL<3:0>:** Binary Coded Decimal value of seconds ‘1’ digit; valid values from 0 to 9

Note 1: Writes to the SECOND registers are only allowed when RTCWREN = 1.

REGISTER 24-10: ALRMCON: ALARM CONTROL REGISTER

R/W-0/0	R/W-0/0	R/W-0/0	R/W-0/0	R/W-0/0	R/W-0/0	U-0	U-0
ALRMEN	CHIME	AMASK3	AMASK2	AMASK1	AMASK0	—	—
bit 7							bit 0

Legend:			
R = Readable bit	W = Writable bit	U = Unimplemented bit, read as ‘0’	
-n = Value at POR	‘1’ = Bit is set	‘0’ = Bit is cleared	x = Bit is unknown

bit 7 **ALRMEN:** Alarm Enable bit(1)
- 1 = Alarm is enabled (cleared automatically after an alarm event whenever ARPT<7:0> = 0000 0000 and CHIME = 0)
- 0 = Alarm is disabled

bit 6 **CHIME:** Chime Enable bit
- 1 = Chime is enabled; ARPT<7:0> bits are allowed to roll over from 00h to FFh
- 0 = Chime is disabled; ARPT<7:0> bits stop once they reach 00h

bit 5-2 **AMASK<3:0>:** Alarm Mask Configuration bits
- 0000 = Every half second
- 0001 = Every second
- 0010 = Every 10 seconds
- 0011 = Every minute
- 0100 = Every 10 minutes
- 0101 = Every hour
- 0110 = Once a day
- 0111 = Once a week
- 1000 = Once a month
- 1001 = Once a year (except when configured for February 29th, once every four years)
- 101x = Reserved – do not use
- 11xx = Reserved – do not use

bit 1-0 **Unimplemented:** Read as ‘0’

Note 1: ALRMEN is cleared automatically any time an alarm event occurs when ARPT<7:0> = 00 and CHIME = 0

REGISTER 24-11: ALRMRPT: ALARM REPEAT REGISTER

R/W-0	R/W-0	R/W-0	R/W-0	R/W-0	R/W-0	R/W-0	R/W-0
ARPT7	ARPT6	ARPT5	ARPT4	ARPT3	ARPT2	ARPT1	ARPT0
bit 7							bit 0

Legend:			
R = Readable bit	W = Writable bit	U = Unimplemented bit, read as ‘0’	
-n = Value at POR	‘1’ = Bit is set	‘0’ = Bit is cleared	x = Bit is unknown

bit 7-0 **ARPT<7:0>:** Alarm Repeat Counter Value bits(1)
- 00000000 = Alarm will repeat 0 more times
- .
- .
- .
- 11111111 = Alarm will repeat 255 more times

Note 1: The counter decrements on any alarm event. The counter is prevented from rolling over from ‘255’ to ‘0’ unless CHIME = 1.

REGISTER 24-12: ALRMMTH: ALARM MONTH CONTROL REGISTER

U-0	U-0	U-0	R/W-x	R/W-x	R/W-x	R/W-x	R/W-x
—	—	—	ALRMHMONTH	ALRMLMONTH <3:0>			
bit 7							bit 0

Legend:			
R = Readable bit	W = Writable bit	U = Unimplemented bit, read as ‘0’	
-n = Value at POR	‘1’ = Bit is set	‘0’ = Bit is cleared	x = Bit is unknown

bit 7-5 **Unimplemented:** Read as ‘0’

bit 4 **ALRMHMONTH:** Binary Coded Decimal value of months ‘10’ digit; valid value from 0 to 1

bit 3-0 **ALRMLMONTH<3:0>:** Binary Coded Decimal value of months ‘1’ digit; valid value from 0 to 9

REGISTER 24-13: ALRMWD: ALARM WEEKDAY CONTROL REGISTER

U-0	U-0	U-0	U-0	U-0	R/W-x	R/W-x	R/W-x
—	—	—	—	—	ALRMLWDAY<2:0>		
bit 7							bit 0

Legend:			
R = Readable bit	W = Writable bit	U = Unimplemented bit, read as ‘0’	
-n = Value at POR	‘1’ = Bit is set	‘0’ = Bit is cleared	x = Bit is unknown

bit 7-3 **Unimplemented:** Read as ‘0’

bit 2-0 **ALRMLWDAY<2:0>:** Binary Coded Decimal value of weekdays ‘1’ digit; valid values from 0 to 6.

REGISTER 24-14: ALRMDAY: ALARM DAY CONTROL REGISTER

U-0	U-0	R/W-x	R/W-x	R/W-x	R/W-x	R/W-x	R/W-x
—	—	ALRMHDAY<1:0>		ALRMLDAY<3:0>			
bit 7							bit 0

Legend:			
R = Readable bit	W = Writable bit	U = Unimplemented bit, read as ‘0’	
-n = Value at POR	‘1’ = Bit is set	‘0’ = Bit is cleared	x = Bit is unknown

bit 7-6 **Unimplemented:** Read as ‘0’

bit 5-4 **ALRMHDAY<1:0>:** Binary Coded Decimal value of days ‘10’ digit; valid value from 0 to 3

bit 3-0 **ALRMLDAY<3:0>:** Binary Coded Decimal value of days ‘1’ digit; valid value from 0 to 9

REGISTER 24-15: ALRMHR: ALARM HOUR CONTROL REGISTER

U-0	U-0	R/W-x	R/W-x	R/W-x	R/W-x	R/W-x	R/W-x
—	—	ALRMHHR<1:0>		ALRMLHR<3:0>			
bit 7							bit 0

Legend:			
R = Readable bit	W = Writable bit	U = Unimplemented bit, read as ‘0’	
-n = Value at POR	‘1’ = Bit is set	‘0’ = Bit is cleared	x = Bit is unknown

bit 7-6 **Unimplemented:** Read as ‘0’

bit 5-4 **ALRMHHR<1:0>:** Binary Coded Decimal value of hours ‘10’ digit; valid values from 0 to 2

bit 3-0 **ALRMLHR<3:0>:** Binary Coded Decimal value of hours ‘1’ digit; valid values from 0 to 9

REGISTER 24-16: ALRMMIN: ALARM MINUTE CONTROL REGISTER

U-0	R/W-x	R/W-x	R/W-x	R/W-x	R/W-x	R/W-x	R/W-x
—	ALRMHMIN<2:0>			ALRMLMIN<3:0>			
bit 7							bit 0

Legend:			
R = Readable bit	W = Writable bit	U = Unimplemented bit, read as ‘0’	
-n = Value at POR	‘1’ = Bit is set	‘0’ = Bit is cleared	x = Bit is unknown

bit 7 **Unimplemented:** Read as ‘0’

bit 6-4 **ALRMHMIN<2:0>:** Binary Coded Decimal value of minutes ‘10’ digit; valid values from 0 to 5

bit 3-0 **ALRMLMIN<3:0>:** Binary Coded Decimal value of minutes ‘1’ digit; valid values from 0 to 9

REGISTER 24-17: ALRMSEC: ALARM SECONDS CONTROL REGISTER

U-0	R/W-x	R/W-x	R/W-x	R/W-x	R/W-x	R/W-x	R/W-x
—	ALRMHSEC<2:0>			ALRMLSEC<3:0>			
bit 7							bit 0

Legend:			
R = Readable bit	W = Writable bit	U = Unimplemented bit, read as ‘0’	
-n = Value at POR	‘1’ = Bit is set	‘0’ = Bit is cleared	x = Bit is unknown

bit 7 **Unimplemented:** Read as ‘0’

bit 6-4 **ALRMHSEC<2:0>:** Binary Coded Decimal value of seconds ‘10’ digit; valid values from 0 to 5

bit 3-0 **ALRMLSEC<3:0>:** Binary Coded Decimal value of seconds ‘1’ digit; valid values from 0 to 9

TABLE 24-3: SUMMARY OF REGISTERS ASSOCIATED WITH THE RTCC MODULE

Name	Bit 7	Bit 6	Bit 5	Bit 4	Bit 3	Bit 2	Bit 1	Bit 0	Register on Page
PIE8	LCDIE	RTCCIE	—	—	—	SMT1PWAIE	SMT1PRAIE	SMT1IE	173
PIR8	LCDIF	RTCCIF	—	—	—	SMT1PWAIF	SMT1PRAIF	SMT1IF	182
PMD2	RTCCMD	DACMD	ADCMD	—	—	CMP2MD	CMP1MD	ZCDMD	271
INTCON	GIE	PEIE	—	—	—	—	—	INTEDG	164
PCON1	—	—	—	—	—	—	$\overline{\text{MEMV}}$	$\overline{\text{VBATBOR}}$	141
RTCCON	RTCEN	—	RTCWREN	RTCSYNC	HALFSEC	—	RTCCLKSEL<1:0>		358
RTCCAL	CAL<7:0>								359
ALRMCON	ALRMEN	CHIME	AMASK<3:0>				—	—	362
ALRMRPT	ARPT<7:0>								362
YEAR	YEARH<3:0>				YEARL<3:0>				359
MONTH	—	—	—	MONTHH	MONTHL<3:0>				359
WEEKDAY	—	—	—	—	—	WDAY<2:0>			360
DAY	—	—	DAYH<1:0>		DAYL<3:0>				360
HOURS	—	—	HRH<1:0>		HRL<3:0>				360
MINUTES	—	MINH<2:0>			MINL<3:0>				361
SECONDS	—	SECH<2:0>			SECL<3:0>				361
ALRMMTH	—	—	—	ALRMHMONTH	ALRMLMONTH <3:0>				363
ALRMWD	—	—	—	—	—	ALRMLWDAY<2:0>			363
ALRMDAY	—	—	ALRMHDAY<1:0>		ALRMLDAY<3:0>				363
ALRMHR	—	—	ALRMHHR<1:0>		ALRMLHR<3:0>				364
ALRMMIN	—	ALRMHMIN<2:0>			ALRMLMIN<3:0>				364
ALRMSEC	—	ALRMHSEC<2:0>			ALRMLSEC<3:0>				364

25.0 TIMER0 MODULE

The Timer0 module is an 8/16-bit timer/counter with the following features:

- 16-bit timer/counter
- 8-bit timer/counter with programmable period
- Synchronous or asynchronous operation
- Selectable clock sources
- Programmable prescaler (independent of Watchdog Timer)
- Programmable postscaler
- Operation during Sleep mode
- Interrupt on match or overflow
- Output on I/O pin (via PPS) or to other peripherals

25.1 Timer0 Operation

Timer0 can operate as either an 8-bit timer/counter or a 16-bit timer/counter. The mode is selected with the T016BIT bit of the T0CON register.

25.1.1 16-BIT MODE

In normal operation, TMR0 increments on the rising edge of the clock source. A 15-bit prescaler on the clock input gives several prescale options (see prescaler control bits, T0CKPS<3:0> in the T0CON1 register).

25.1.1.1 Timer0 Reads and Writes in 16-Bit Mode

TMR0H is not the actual high byte of Timer0 in 16-bit mode. It is actually a buffered version of the real high byte of Timer0, which is neither directly readable nor writable (see Figure 25-1). TMR0H is updated with the contents of the high byte of Timer0 during a read of TMR0L. This provides the ability to read all 16 bits of Timer0 without having to verify that the read of the high and low byte was valid, due to a rollover between successive reads of the high and low byte.

Similarly, a write to the high byte of Timer0 must also take place through the TMR0H Buffer register. The high byte is updated with the contents of TMR0H when a write occurs to TMR0L. This allows all 16 bits of Timer0 to be updated at once.

25.1.2 8-BIT MODE

In normal operation, TMR0 increments on the rising edge of the clock source. A 15-bit prescaler on the clock input gives several prescale options (see prescaler control bits, T0CKPS<3:0> in the T0CON1 register).

The value of TMR0L is compared to that of the Period buffer, a copy of TMR0H, on each clock cycle. When the two values match, the following events happen:

- TMR0_out goes high for one prescaled clock period
- TMR0L is reset
- The contents of TMR0H are copied to the period buffer

In 8-bit mode, the TMR0L and TMR0H registers are both directly readable and writable. The TMR0L register is cleared on any device Reset, while the TMR0H register initializes at FFh.

Both the prescaler and postscaler counters are cleared on the following events:

- A write to the TMR0L register
- A write to either the T0CON0 or T0CON1 registers
- Any device Reset – Power-on Reset (POR), MCLR Reset, Watchdog Timer Reset (WDTR) or
- Brown-out Reset (BOR)

25.1.3 COUNTER MODE

In Counter mode, the prescaler is normally disabled by setting the T0CKPS bits of the T0CON1 register to ‘0000’. Each rising edge of the clock input (or the output of the prescaler if the prescaler is used) increments the counter by ‘1’.

25.1.4 TIMER MODE

In Timer mode, the Timer0 module will increment every instruction cycle as long as there is a valid clock signal and the T0CKPS bits of the T0CON1 register (Register 25-2) are set to ‘0000’. When a prescaler is added, the timer will increment at the rate based on the prescaler value.

25.1.5 ASYNCHRONOUS MODE

When the T0ASYNC bit of the T0CON1 register is set (T0ASYNC = ‘1’), the counter increments with each rising edge of the input source (or output of the prescaler, if used). Asynchronous mode allows the counter to continue operation during Sleep mode provided that the clock also continues to operate during Sleep.

25.1.6 SYNCHRONOUS MODE

When the T0ASYNC bit of the T0CON1 register is clear (T0ASYNC = 0), the counter clock is synchronized to the system oscillator (FOSC/4). When operating in Synchronous mode, the counter clock frequency cannot exceed FOSC/4.

25.2 Clock Source Selection

The T0CS<2:0> bits of the T0CON1 register are used to select the clock source for Timer0. Register 25-2 displays the clock source selections.

25.2.1 INTERNAL CLOCK SOURCE

When the internal clock source is selected, Timer0 operates as a timer and will increment on multiples of the clock source, as determined by the Timer0 prescaler.

25.2.2 EXTERNAL CLOCK SOURCE

When an external clock source is selected, Timer0 can operate as either a timer or a counter. Timer0 will increment on multiples of the rising edge of the external clock source, as determined by the Timer0 prescaler.

25.3 Programmable Prescaler

A software programmable prescaler is available for exclusive use with Timer0. There are 16 prescaler options for Timer0 ranging in powers of two from 1:1 to 1:32768. The prescaler values are selected using the T0CKPS<3:0> bits of the T0CON1 register.

The prescaler is not directly readable or writable. Clearing the prescaler register can be done by writing to the TMR0L register or the T0CON1 register.

25.4 Programmable Postscaler

A software programmable postscaler (output divider) is available for exclusive use with Timer0. There are 16 postscaler options for Timer0 ranging from 1:1 to 1:16. The postscaler values are selected using the T0OUTPS<3:0> bits of the T0CON0 register.

The postscaler is not directly readable or writable. Clearing the postscaler register can be done by writing to the TMR0L register or the T0CON0 register.

25.5 Operation during Sleep

When operating synchronously, Timer0 will halt. When operating asynchronously, Timer0 will continue to increment and wake the device from Sleep (if Timer0 interrupts are enabled) provided that the input clock source is active.

25.6 Timer0 Interrupts

The Timer0 Interrupt Flag bit (TMR0IF) is set when either of the following conditions occur:

- 8-bit TMR0L matches the TMR0H value
- 16-bit TMR0 rolls over from ‘FFFFh’

When the postscaler bits (T0OUTPS<3:0>) are set to 1:1 operation (no division), the T0IF flag bit will be set with every TMR0 match or rollover. In general, the TMR0IF flag bit will be set every T0OUTPS +1 matches or rollovers.

If Timer0 interrupts are enabled (TMR0IE bit of the PIE0 register = `1`), the CPU will be interrupted and the device may wake from sleep (see **Section 25.2 “Clock Source Selection”** for more details).

25.7 Timer0 Output

The Timer0 output can be routed to any I/O pin via the RxyPPS output selection register (see **Section 15.0 “Peripheral Pin Select (PPS) Module”** for additional information). The Timer0 output can also be used by other peripherals, such as the Auto-conversion Trigger of the Analog-to-Digital Converter. Finally, the Timer0 output can be monitored through software via the Timer0 output bit (T0OUT) of the T0CON0 register (Register 25-1).

TMR0_out will be one postscaled clock period when a match occurs between TMR0L and TMR0H in 8-bit mode, or when TMR0 rolls over in 16-bit mode. The Timer0 output is a 50% duty cycle that toggles on each TMR0_out rising clock edge.

FIGURE 25-1: BLOCK DIAGRAM OF TIMER0

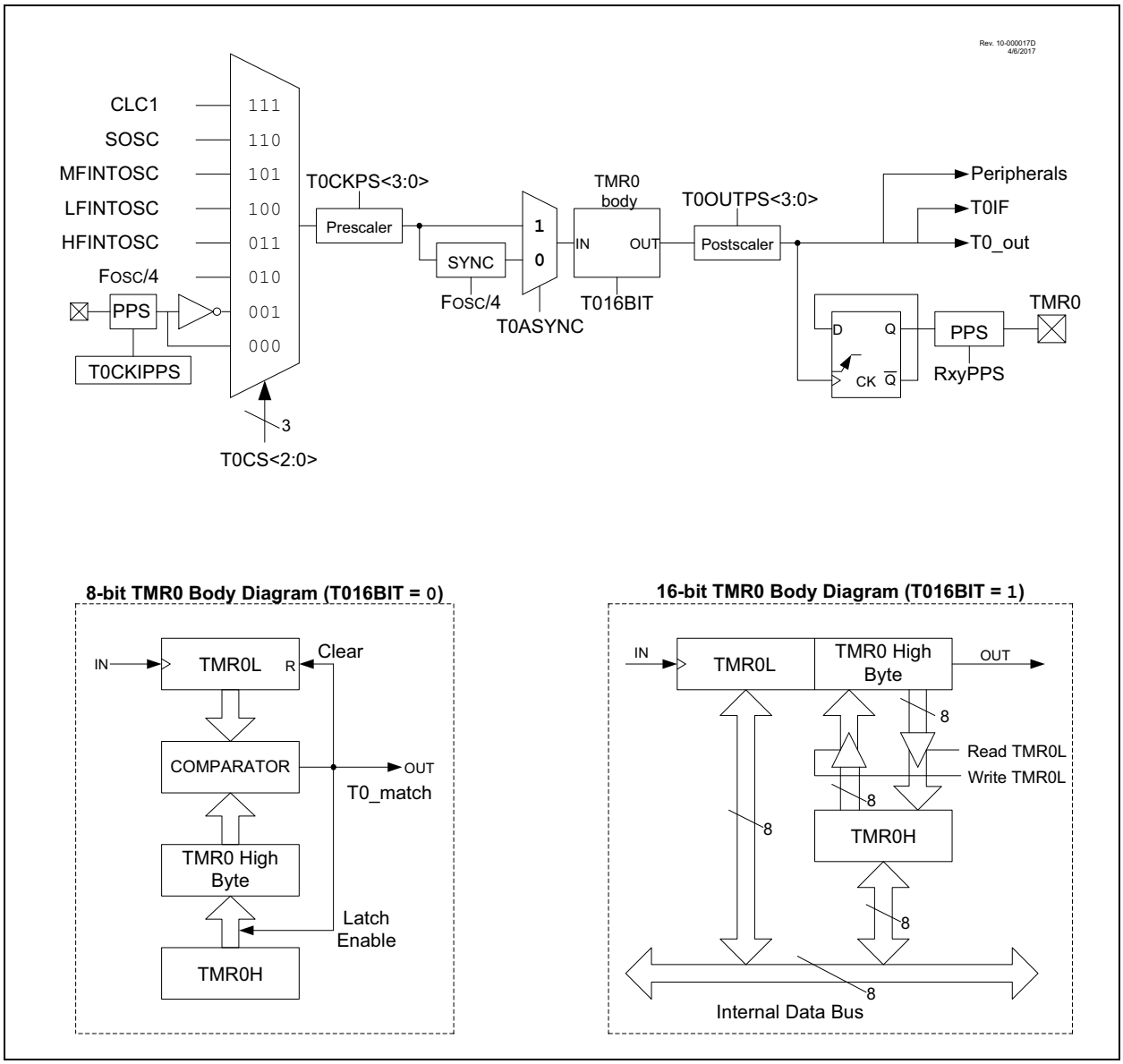

REGISTER 25-1: T0CON0: TIMER0 CONTROL REGISTER 0

R/W-0/0	U-0	R-0	R/W-0/0	R/W-0/0	R/W-0/0	R/W-0/0	R/W-0/0
T0EN	—	T0OUT	T016BIT	T0OUTPS<3:0>			
bit 7							bit 0

Legend:		
R = Readable bit	W = Writable bit	U = Unimplemented bit, read as ‘0’
u = Bit is unchanged	x = Bit is unknown	-n/n = Value at POR and BOR/Value at all other Resets
‘1’ = Bit is set	‘0’ = Bit is cleared	

bit 7 **T0EN:** Timer0 Enable bit
`1` = The module is enabled and operating
`0` = The module is disabled and in the lowest power mode

bit 6 **Unimplemented:** Read as ‘`0`’

bit 5 **T0OUT:** Timer0 Output bit (read-only)
Timer0 output bit

bit 4 **T016BIT:** Timer0 Operating as 16-bit Timer Select bit
`1` = Timer0 is a 16-bit timer
`0` = Timer0 is an 8-bit timer

bit 3-0 **T0OUTPS<3:0>:** Timer0 output postscaler (divider) select bits
`1111` = 1:16 Postscaler
`1110` = 1:15 Postscaler
`1101` = 1:14 Postscaler
`1100` = 1:13 Postscaler
`1011` = 1:12 Postscaler
`1010` = 1:11 Postscaler
`1001` = 1:10 Postscaler
`1000` = 1:9 Postscaler
`0111` = 1:8 Postscaler
`0110` = 1:7 Postscaler
`0101` = 1:6 Postscaler
`0100` = 1:5 Postscaler
`0011` = 1:4 Postscaler
`0010` = 1:3 Postscaler
`0001` = 1:2 Postscaler
`0000` = 1:1 Postscaler

REGISTER 25-2: T0CON1: TIMER0 CONTROL REGISTER 1

R/W-0/0	R/W-0/0	R/W-0/0	R/W-0/0	R/W-0/0	R/W-0/0	R/W-0/0	R/W-0/0
T0CS<2:0>			T0ASYNC	T0CKPS<3:0>			
bit 7							bit 0

Legend:		
R = Readable bit	W = Writable bit	U = Unimplemented bit, read as ‘0’
u = Bit is unchanged	x = Bit is unknown	-n/n = Value at POR and BOR/Value at all other Resets
‘1’ = Bit is set	‘0’ = Bit is cleared	

bit 7-5 **T0CS<2:0>:** Timer0 Clock Source select bits
`111` = CLC1
`110` = SOSC
`101` = MFINTOSC (500 kHz)
`100` = LFINTOSC
`011` = HFINTOSC
`010` = FOSC/4
`001` = T0CKIPPS (Inverted)
`000` = T0CKIPPS (True)

bit 4 **T0ASYNC:** TMR0 Input Asynchronization Enable bit
`1` = The input to the TMR0 counter is not synchronized to system clocks
`0` = The input to the TMR0 counter is synchronized to FOSC/4

bit 3-0 **T0CKPS<3:0>:** Prescaler Rate Select bit
`1111` = 1:32768
`1110` = 1:16384
`1101` = 1:8192
`1100` = 1:4096
`1011` = 1:2048
`1010` = 1:1024
`1001` = 1:512
`1000` = 1:256
`0111` = 1:128
`0110` = 1:64
`0101` = 1:32
`0100` = 1:16
`0011` = 1:8
`0010` = 1:4
`0001` = 1:2
`0000` = 1:1

TABLE 25-1: SUMMARY OF REGISTERS ASSOCIATED WITH TIMER0

Name	Bit 7	Bit 6	Bit 5	Bit 4	Bit 3	Bit 2	Bit 1	Bit 0	Register on Page
TMR0L	Holding Register for the Least Significant Byte of the 16-bit TMR0 Register								366*
TMR0H	Holding Register for the Most Significant Byte of the 16-bit TMR0 Register								366*
T0CON0	T0EN	—	T0OUT	T016BIT	T0OUTPS<3:0>				369
T0CON1	T0CS<2:0>			T0ASYNC	T0CKPS<3:0>				370
T0CKIPPS	—	—	—	—	T0CKIPPS<3:0>				264
TMR0PPS	—	—	—	TMR0PPS<4:0>					264
T1GCON	GE	GPOL	GTM	GSPM	GGO/$\overline{\text{DONE}}$	GVAL	—	—	381
INTCON	GIE	PEIE	—	—	—	—	—	INTEDG	164
PIR0	—	—	TMR0IF	IOCIF	—	—	—	INTF	174
PIE0	—	—	TMR0IE	IOCIE	—	—	—	INTE	165

Legend: — = Unimplemented location, read as '0'. Shaded cells are not used by the Timer0 module.
* Page with Register information.

26.0 TIMER1 MODULE WITH GATE CONTROL

The Timer1 module is 16-bit timer/counters with the following features:

- 16-bit timer/counter register pair (TMR1H:TMR1L)
- Programmable internal or external clock source
- 2-bit prescaler
- Clock source for optional comparator synchronization
- Multiple Timer1 gate (count enable) sources
- Interrupt on overflow
- Wake-up on overflow (external clock, Asynchronous mode only)
- Time base for the Capture/Compare function
- Auto-conversion Trigger (with CCP)
- Selectable Gate Source Polarity
- Gate Toggle mode
- Gate Single-Pulse mode
- Gate Value Status
- Gate Event Interrupt

Figure 26-1 is a block diagram of the Timer1 module.

This device has one instance of Timer1 type modules.

FIGURE 26-1: TIMER1 BLOCK DIAGRAM

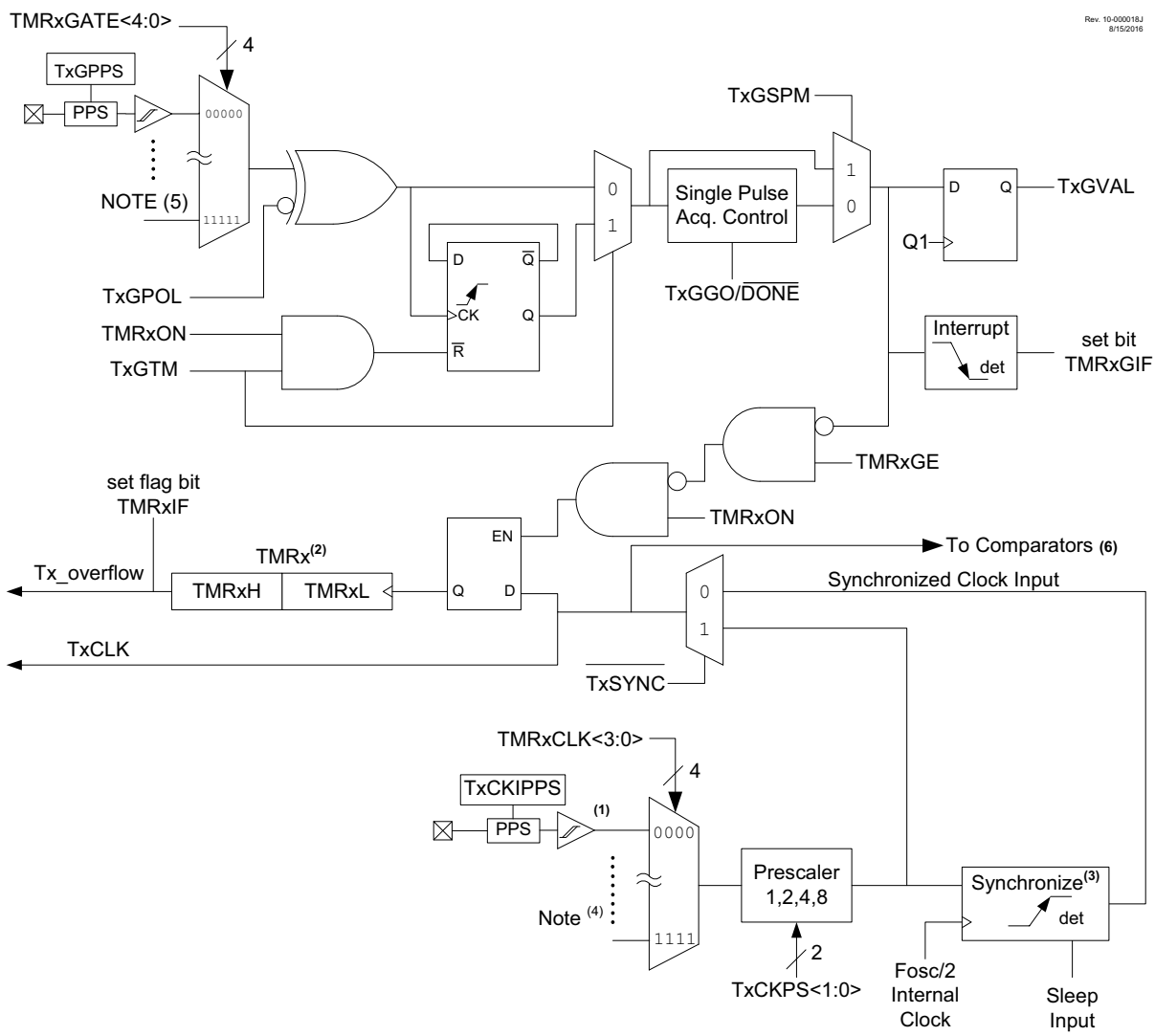

Note 1: ST Buffer is high speed type when using TxCKIPPS.
2: TMRx register increments on rising edge.
3: Synchronize does not operate while in Sleep.
4: See Register 26-3 for Clock source selections.
5: See Register 26-4 for GATE source selections.
6: Synchronized comparator output should not be used in conjunction with synchronized input clock.

26.1 Timer1 Operation

The Timer1 modules are 16-bit incrementing counters which are accessed through the TMR1H:TMR1L register pairs. Writes to TMR1H or TMR1L directly update the counter.

When used with an internal clock source, the module is a timer and increments on every instruction cycle. When used with an external clock source, the module can be used as either a timer or counter and increments on every selected edge of the external source.

The timer is enabled by configuring the TMR1ON and GE bits in the T1CON and T1GCON registers, respectively. Table 26-1 displays the Timer1 enable selections.

TABLE 26-1: TIMER1 ENABLE SELECTIONS

TMR1ON	TMR1GE	Timer1 Operation
1	1	Count Enabled
1	0	Always On
0	1	Off
0	0	Off

26.2 Clock Source Selection

The T1CLK register is used to select the clock source for the timer. Register 26-3 shows the possible clock sources that may be selected to make the timer increment.

26.2.1 INTERNAL CLOCK SOURCE

When the internal clock source FOSC is selected, the TMR1H:TMR1L register pair will increment on multiples of FOSC as determined by the respective Timer1 prescaler.

When the FOSC internal clock source is selected, the timer register value will increment by four counts every instruction clock cycle. Due to this condition, a 2 LSB error in resolution will occur when reading the TMR1H:TMR1L value. To utilize the full resolution of the timer in this mode, an asynchronous input signal must be used to gate the timer clock input.

Out of the total timer gate signal sources, the following subset of sources can be asynchronous and may be useful for this purpose:

- CLC4 output
- CLC3 output
- CLC2 output
- CLC1 output
- Zero-Cross Detect output
- Comparator2 output
- Comparator1 output
- TxG PPS remappable input pin

26.2.2 EXTERNAL CLOCK SOURCE

When the timer is enabled and the external clock input source (ex: T1CKI PPS remappable input) is selected as the clock source, the timer will increment on the rising edge of the external clock input.

When using an external clock source, the timer can be configured to run synchronously or asynchronously, as described in **Section 26.5 "Timer Operation in Asynchronous Counter Mode"**.

When used as a timer with a clock oscillator, an external 32.768 kHz crystal can be used connected to the SOSCI/SOSCO pins.

Note: In Counter mode, a falling edge must be registered by the counter prior to the first incrementing rising edge after any one or more of the following conditions:

- The timer is first enabled after POR
- Firmware writes to TMR1H or TMR1L
- The timer is disabled
- The timer is re-enabled (e.g., TMR1ON-->1) when the T1CKI signal is currently logic low.

26.3 Timer Prescaler

Timer1 has four prescaler options allowing 1, 2, 4 or 8 divisions of the clock input. The CKPS bits of the T1CON register control the prescale counter. The prescale counter is not directly readable or writable; however, the prescaler counter is cleared upon a write to TMR1H or TMR1L.

26.4 Secondary Oscillator

A dedicated low-power 32.768 kHz oscillator circuit is built-in between pins SOSCI (input) and SOSCO (amplifier output). This internal circuit is designed to be used in conjunction with an external 32.768 kHz crystal.

The oscillator circuit is enabled by setting the SOSCEN bit of the OSCEN register. The oscillator will continue to run during Sleep.

Note: The oscillator requires a start-up and stabilization time before use. Thus, SOSCEN should be set and a suitable delay observed prior to using Timer1 with the SOSC source. A suitable delay similar to the OST delay can be implemented in software by clearing the TMR1IF bit then presetting the TMR1H:TMR1L register pair to FC00h. The TMR1IF flag will be set when 1024 clock cycles have elapsed, thereby indicating that the oscillator is running and reasonably stable.

26.5 Timer Operation in Asynchronous Counter Mode

If the control bit $\overline{\text{SYNC}}$ of the T1CON register is set, the external clock input is not synchronized. The timer increments asynchronously to the internal phase clocks. If the external clock source is selected then the timer will continue to run during Sleep and can generate an interrupt on overflow, which will wake-up the processor. However, special precautions in software are needed to read/write the timer (see **Section 26.5.1 "Reading and Writing Timer1 in Asynchronous Counter Mode"**).

Note: When switching from synchronous to asynchronous operation, it is possible to skip an increment. When switching from asynchronous to synchronous operation, it is possible to produce an additional increment.

26.5.1 READING AND WRITING TIMER1 IN ASYNCHRONOUS COUNTER MODE

Reading TMR1H or TMR1L while the timer is running from an external asynchronous clock will ensure a valid read (taken care of in hardware). However, the user should keep in mind that reading the 16-bit timer in two 8-bit values itself, poses certain problems, since the timer may overflow between the reads.

For writes, it is recommended that the user simply stop the timer and write the desired values. A write contention may occur by writing to the timer registers, while the register is incrementing. This may produce an unpredictable value in the TMR1H:TMR1L register pair.

26.6 Timer Gate

Timer1 can be configured to count freely or the count can be enabled and disabled using the time gate circuitry. This is also referred to as Timer Gate Enable.

The timer gate can also be driven by multiple selectable sources.

26.6.1 TIMER GATE ENABLE

The Timer Gate Enable mode is enabled by setting the GE bit of the T1GCON register. The polarity of the Timer Gate Enable mode is configured using the GPOL bit of the T1GCON register.

When Timer Gate Enable signal is enabled, the timer will increment on the rising edge of the Timer1 clock source. When Timer Gate Enable signal is disabled, the timer always increments, regardless of the GE bit. See Figure 26-3 for timing details.

TABLE 26-2: TIMER GATE ENABLE SELECTIONS

T1CLK	T1GPOL	T1G	Timer Operation
↑	1	1	Counts
↑	1	0	Holds Count
↑	0	1	Holds Count
↑	0	0	Counts

26.6.2 TIMER GATE SOURCE SELECTION

One of the several different external or internal signal sources may be chosen to gate the timer and allow the timer to increment. The gate input signal source can be selected based on the T1GATE register setting. See the T1GATE register (Register 26-4) description for a complete list of the available gate sources. The polarity for each available source is also selectable. Polarity selection is controlled by the GPOL bit of the T1GCON register.

26.6.2.1 T1G Pin Gate Operation

The T1G pin is one source for the timer gate control. It can be used to supply an external source to the time gate circuitry.

26.6.2.2 Timer0 Overflow Gate Operation

When Timer0 overflows, or a period register match condition occurs (in 8-bit mode), a low-to-high pulse will automatically be generated and internally supplied to the Timer1 gate circuitry.

26.6.2.3 Comparator C1 Gate Operation

The output resulting from a Comparator 1 operation can be selected as a source for the timer gate control. The Comparator 1 output can be synchronized to the timer clock or left asynchronous. For more information see **Section 22.5.1 "Comparator Output Synchronization"**.

26.6.2.4 Comparator C2 Gate Operation

The output resulting from a Comparator 2 operation can be selected as a source for the timer gate control. The Comparator 2 output can be synchronized to the timer clock or left asynchronous. For more information see **Section 22.5.1 "Comparator Output Synchronization"**.

26.6.3 TIMER1 GATE TOGGLE MODE

When Timer1 Gate Toggle mode is enabled, it is possible to measure the full-cycle length of a timer gate signal, as opposed to the duration of a single level pulse.

The timer gate source is routed through a flip-flop that changes state on every incrementing edge of the signal. See Figure 26-4 for timing details.

Timer1 Gate Toggle mode is enabled by setting the GTM bit of the T1GCON register. When the GTM bit is cleared, the flip-flop is cleared and held clear. This is necessary in order to control which edge is measured.

Note:	Enabling Toggle mode at the same time as changing the gate polarity may result in indeterminate operation.

26.6.4 TIMER1 GATE SINGLE-PULSE MODE

When Timer1 Gate Single-Pulse mode is enabled, it is possible to capture a single-pulse gate event. Timer1 Gate Single-Pulse mode is first enabled by setting the GSPM bit in the T1GCON register. Next, the GGO/$\overline{\text{DONE}}$ bit in the T1GCON register must be set. The timer will be fully enabled on the next incrementing edge. On the next trailing edge of the pulse, the GGO/$\overline{\text{DONE}}$ bit will automatically be cleared. No other gate events will be allowed to increment the timer until the GGO/$\overline{\text{DONE}}$ bit is once again set in software. See Figure 26-5 for timing details.

If the Single-Pulse Gate mode is disabled by clearing the GSPM bit in the T1GCON register, the GGO/$\overline{\text{DONE}}$ bit should also be cleared.

Enabling the Toggle mode and the Single-Pulse mode simultaneously will permit both sections to work together. This allows the cycle times on the timer gate source to be measured. See Figure 26-6 for timing details.

26.6.5 TIMER1 GATE VALUE STATUS

When Timer1 Gate Value Status is utilized, it is possible to read the most current level of the gate control value. The value is stored in the GVAL bit in the T1GCON register. The GVAL bit is valid even when the timer gate is not enabled (GE bit is cleared).

26.6.6 TIMER1 GATE EVENT INTERRUPT

When Timer1 Gate Event Interrupt is enabled, it is possible to generate an interrupt upon the completion of a gate event. When the falling edge of GVAL occurs, the TMR1GIF flag bit in the PIR5 register will be set. If the TMR1GIE bit in the PIE5 register is set, then an interrupt will be recognized.

The TMR1GIF flag bit operates even when the timer gate is not enabled (TMR1GE bit is cleared).

26.7 Timer1 Interrupts

The Timer1 register pair (TMRxH:TMRxL) increments to FFFFh and rolls over to 0000h. When Timer1 rolls over, the Timer1 interrupt flag bit of the respective PIR register is set. To enable the interrupt-on-rollover, you must set these bits:

- ON bit of the T1CON register
- TMR1IE bit of the PIE4 register
- PEIE bit of the INTCON register
- GIE bit of the INTCON register

The interrupt is cleared by clearing the TMR1IF bit in the Interrupt Service Routine.

Note:	To avoid immediate interrupt vectoring, the TMR1H:TMR1L register pair should be preloaded with a value that is not imminently about to rollover, and the TMR1IF flag should be cleared prior to enabling the timer interrupts.

26.8 Timer1 Operation During Sleep

Timer1 can only operate during Sleep when setup in Asynchronous Counter mode. In this mode, an external crystal or clock source can be used to increment the counter. To set up the timer to wake the device:

- ON bit of the T1CON register must be set
- TMR1IE bit of the PIE4 register must be set
- PEIE bit of the INTCON register must be set
- $\overline{\text{SYNC}}$ bit of the T1CON register must be set

The device will wake-up on an overflow and execute the next instructions. If the GIE bit of the INTCON register is set, the device will call the Interrupt Service Routine.

26.9 CCP Capture/Compare Time Base

The CCP modules use the TMR1H:TMR1L register pair as the time base when operating in Capture or Compare mode.

In Capture mode, the value in the TMR1H:TMR1L register pair is copied into the CCPRxH:CCPRxL register pair on a configured event.

In Compare mode, an event is triggered when the value CCPRxH:CCPRxL register pair matches the value in the TMR1H:TMR1L register pair. This event can be an Auto-conversion Trigger.

For more information, see **Section 29.0 “Capture/Compare/PWM Modules”**.

26.10 CCP Special Event Trigger

When any of the CCPs are configured to trigger a special event, the trigger will clear the TMRxH:TMRxL register pair. This special event does not cause a Timer1 interrupt. The CCP module may still be configured to generate a CCP interrupt. In this mode of operation, the CCPRxH:CCPRxL register pair becomes the period register for Timer1. Timer1 should be synchronized and FOSC/4 should be selected as the clock source in order to utilize the Special Event Trigger. Asynchronous operation of Timer1 can cause a Special Event Trigger to be missed. In the event that a write to TMRxH or TMRxL coincides with a Special Event Trigger from the CCP, the write will take precedence.

© 2017-2019 Microchip Technology Inc.

FIGURE 26-2: TIMER1 INCREMENTING EDGE

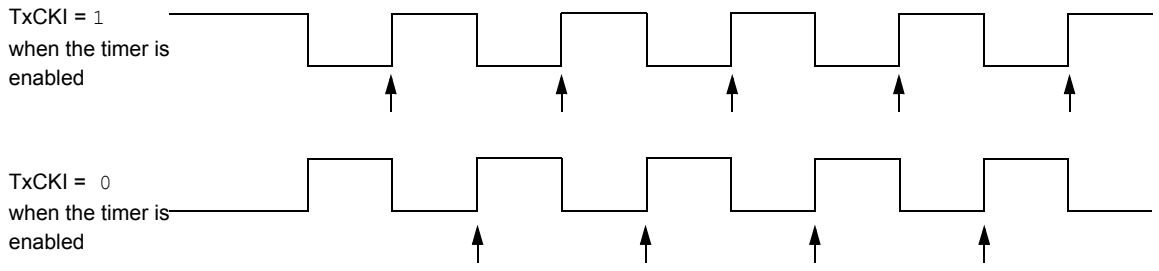

Note 1: Arrows indicate counter increments.

2: In Counter mode, a falling edge must be registered by the counter prior to the first incrementing rising edge of the clock.

FIGURE 26-3: TIMER1 GATE ENABLE MODE

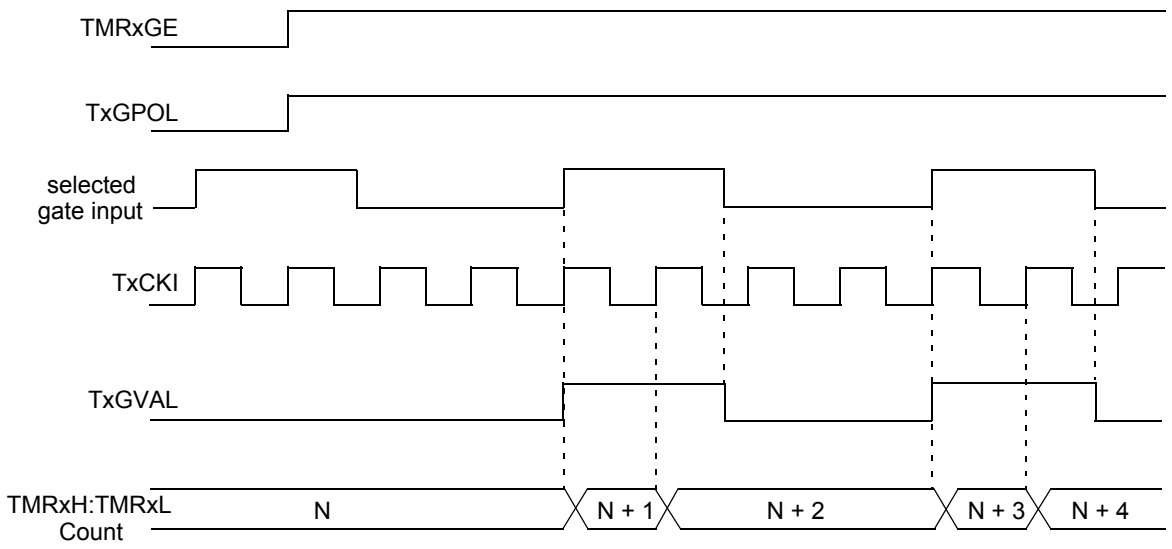

FIGURE 26-4: TIMER1 GATE TOGGLE MODE

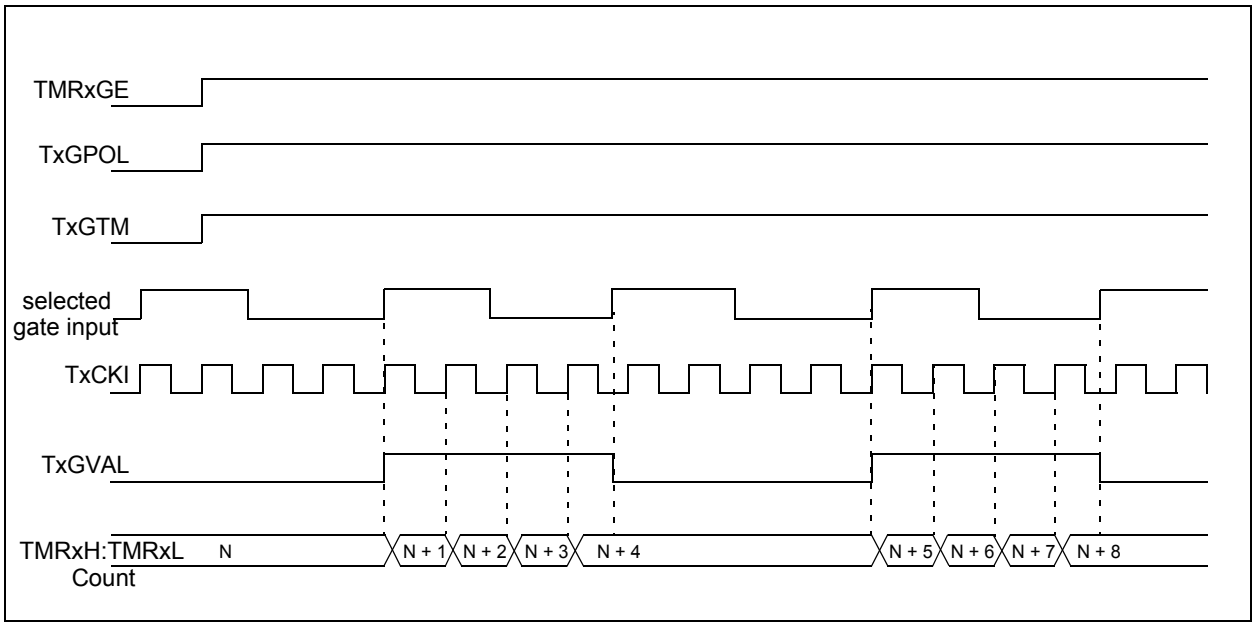

FIGURE 26-5: TIMER1 GATE SINGLE-PULSE MODE

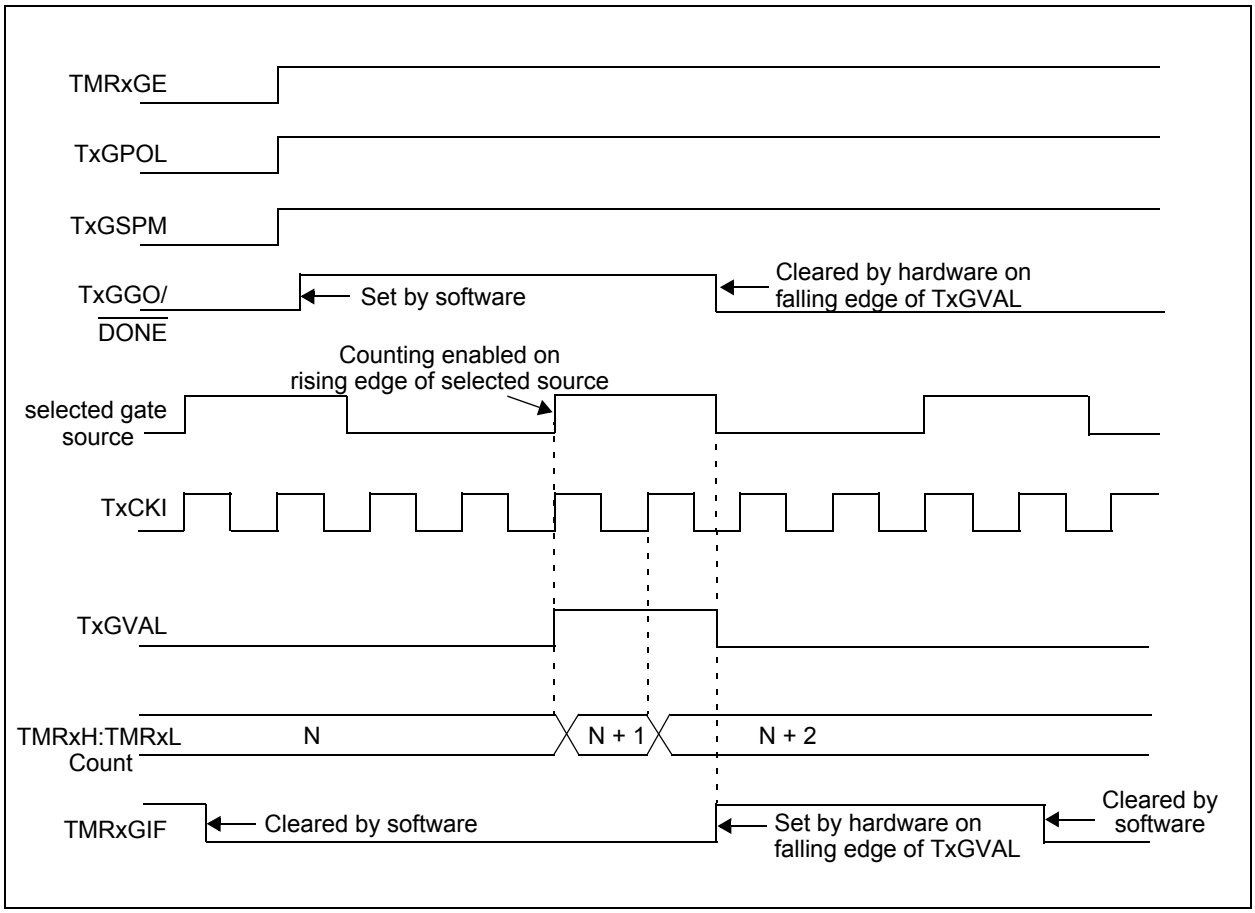

FIGURE 26-6: TIMER1 GATE SINGLE-PULSE AND TOGGLE COMBINED MODE

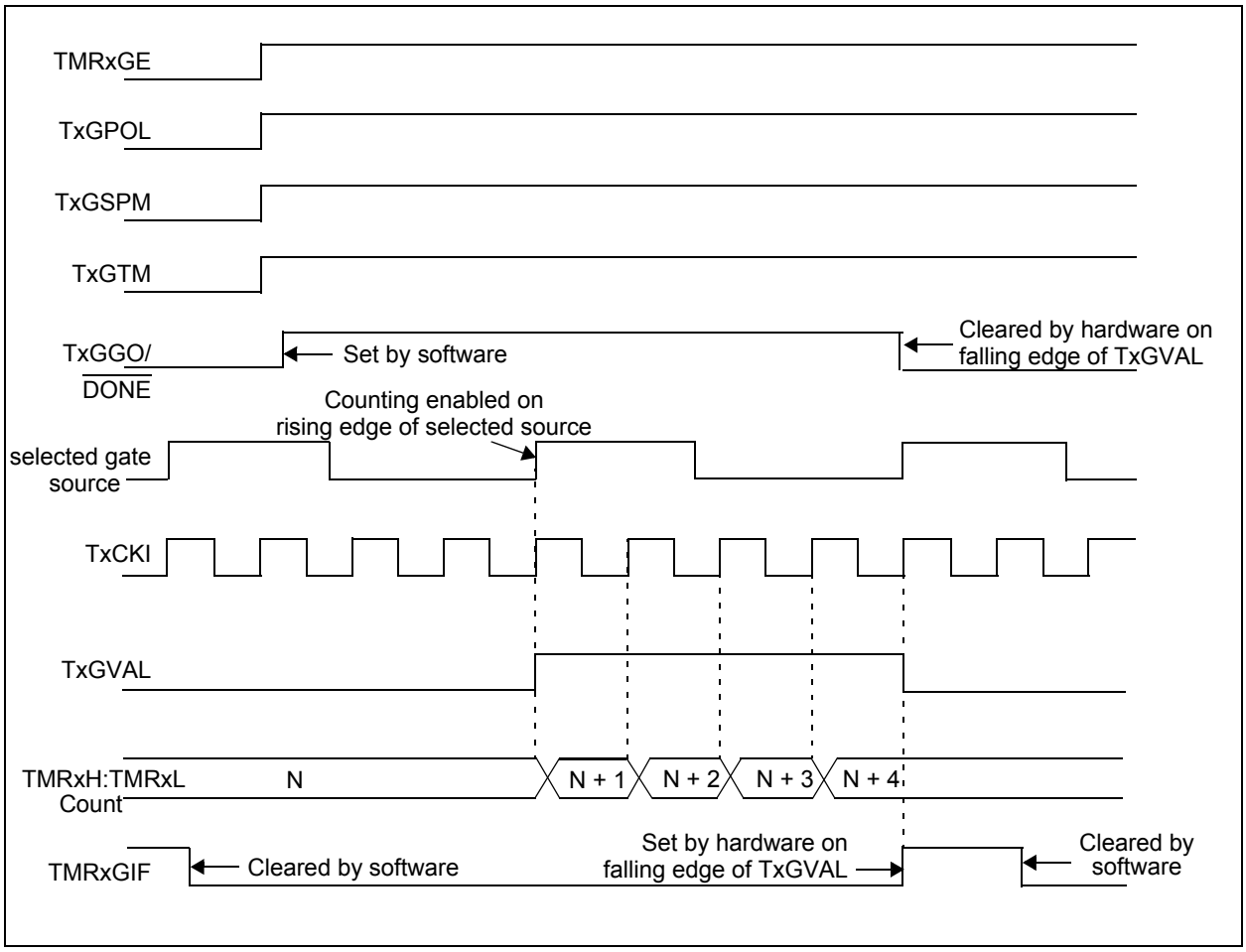

26.11 Peripheral Module Disable

When a peripheral module is not used or inactive, the module can be disabled by setting the Module Disable bit in the PMD registers. This will reduce power consumption to an absolute minimum. Setting the PMD bits holds the module in Reset and disconnects the module's clock source. The Module Disable bit for Timer1 (TMR1MD) are in the PMD1 register. See **Section 16.0 "Peripheral Module Disable (PMD)"** for more information.

26.12 Register Definitions: Timer1 Control

REGISTER 26-1: T1CON: TIMER1 CONTROL REGISTER

U-0	U-0	R/W-0/u	R/W-0/u	U-0	R/W-0/u	R/W-0/u	R/W-0/u
—	—	CKPS<1:0>		—	$\overline{\text{SYNC}}$	RD16	ON
bit 7							bit 0

Legend:		
R = Readable bit	W = Writable bit	U = Unimplemented bit, read as ‘0’
u = Bit is unchanged	x = Bit is unknown	-n/n = Value at POR and BOR/Value at all other Resets
‘1’ = Bit is set	‘0’ = Bit is cleared	

bit 7-6 **Unimplemented:** Read as ‘0’

bit 5-4 **CKPS<1:0>:** Timer1 Input Clock Prescale Select bits
11 = 1:8 Prescale value
10 = 1:4 Prescale value
01 = 1:2 Prescale value
00 = 1:1 Prescale value

bit 3 **Unimplemented:** Read as ‘0’

bit 2 **$\overline{\text{SYNC}}$:** Timer1 Synchronization Control bit
When TMR1CLK = FOSC or FOSC/4
This bit is ignored. The timer uses the internal clock and no additional synchronization is performed.
ELSE
0 = Synchronize external clock input with system clock
1 = Do not synchronize external clock input

bit 1 **RD16:** 16-bit Read/Write Mode Enable bit
0 = Enables register read/write of Timer1 in two 8-bit operation
1 = Enables register read/write of Timer1 in one 16-bit operation

bit 0 **ON:** Timer1 On bit
1 = Enables Timer1
0 = Stops Timer1 and clears Timer1 gate flip-flop

REGISTER 26-2: T1GCON: TIMER1 GATE CONTROL REGISTER

R/W-0/u	R/W-0/u	R/W-0/u	R/W-0/u	R/W/HC-0/u	R-x/x	U-0	U-0
GE	GPOL	GTM	GSPM	GGO/$\overline{\text{DONE}}$	GVAL	—	—
bit 7							bit 0

Legend:		
R = Readable bit	W = Writable bit	U = Unimplemented bit, read as ‘0’
u = Bit is unchanged	x = Bit is unknown	-n/n = Value at POR and BOR/Value at all other Resets
‘1’ = Bit is set	‘0’ = Bit is cleared	HC = Bit is cleared by hardware

bit 7 **GE:** Timer1 Gate Enable bit
If ON = 0:
This bit is ignored
If ON = 1:
1 = Timer1 counting is controlled by the Timer1 gate function
0 = Timer1 is always counting

bit 6 **GPOL:** Timer1 Gate Polarity bit
1 = Timer1 gate is active-high (Timer1 counts when gate is high)
0 = Timer1 gate is active-low (Timer1 counts when gate is low)

bit 5 **GTM:** Timer1 Gate Toggle Mode bit
1 = Timer1 Gate Toggle mode is enabled
0 = Timer1 Gate Toggle mode is disabled and toggle flip-flop is cleared
Timer1 gate flip-flop toggles on every rising edge.

bit 4 **GSPM:** Timer1 Gate Single-Pulse Mode bit
1 = Timer1 Gate Single-Pulse mode is enabled
0 = Timer1 Gate Single-Pulse mode is disabled

bit 3 **GGO/$\overline{\text{DONE}}$:** Timer1 Gate Single-Pulse Acquisition Status bit
1 = Timer1 gate single-pulse acquisition is ready, waiting for an edge
0 = Timer1 gate single-pulse acquisition has completed or has not been started
This bit is automatically cleared when GSPM is cleared

bit 2 **GVAL:** Timer1 Gate Value Status bit
Indicates the current state of the Timer1 gate that could be provided to TMR1H:TMR1L
Unaffected by Timer1 Gate Enable (GE)

bit 1-0 **Unimplemented:** Read as ‘0’

REGISTER 26-3: T1CLK TIMER1 CLOCK SELECT REGISTER

U-0	U-0	U-0	U-0	R/W-0/u	R/W-0/u	R/W-0/u	R/W-0/u
—	—	—	—	CS<3:0>			
bit 7							bit 0

Legend:		
R = Readable bit	W = Writable bit	U = Unimplemented bit, read as ‘0’
u = Bit is unchanged	x = Bit is unknown	-n/n = Value at POR and BOR/Value at all other Resets
‘1’ = Bit is set	‘0’ = Bit is cleared	HC = Bit is cleared by hardware

bit 7-4 **Unimplemented:** Read as ‘0’

bit 3-0 **CS<3:0>:** Timer1 Clock Select bits
1111 = Reserved
1110 = Reserved
1101 = Reserved
1100 = LC4_out
1011 = LC3_out
1010 = LC2_out
1001 = LC1_out
1000 = Timer0 Overflow Output
0111 = SOSC
0110 = MFINTOSC/16 (31.25 kHz)
0101 = MFINTOSC (500 kHz)
0100 = LFINTOSC
0011 = HFINTOSC
0010 = FOSC
0001 = FOSC/4
0000 = TxCKIPPS

REGISTER 26-4: T1GATE TIMER1 GATE SELECT REGISTER

U-0	U-0	U-0	R/W-0/u	R/W-0/u	R/W-0/u	R/W-0/u	R/W-0/u
—	—	—	GSS<4:0>				
bit 7							bit 0

Legend:		
R = Readable bit	W = Writable bit	U = Unimplemented bit, read as ‘0’
u = Bit is unchanged	x = Bit is unknown	-n/n = Value at POR and BOR/Value at all other Resets
‘1’ = Bit is set	‘0’ = Bit is cleared	HC = Bit is cleared by hardware

bit 7-5 **Unimplemented:** Read as ‘0’

bit 4-0 **GSS<4:0>:** Timer1 Gate Select bits
11111-10001 = Reserved
10000 = RTCC second output
01111 = ZCD1 output
01110 = C2OUT output
01101 = C1OUT output
01100 = LC4 out
01011 = LC3 out
01010 = LC2 out
01001 = LC1 out
01000 = PWM4 out
00111 = PWM3 out
00110 = CCP2 out
00101 = CCP1 out
00100 = SMT1 overflow output
00011 = TMR4 postscaled
00010 = TMR2 postscaled
00001 = Timer0 overflow output
00000 = T1GPPS

TABLE 26-3: SUMMARY OF REGISTERS ASSOCIATED WITH TIMER1

Name	Bit 7	Bit 6	Bit 5	Bit 4	Bit 3	Bit 2	Bit 1	Bit 0	Register on Page
INTCON	GIE	PEIE	—	—	—	—	—	INTEDG	164
PIE4	—	—	—	—	TMR4IE	—	TMR2IE	TMR1IE	169
PIR4	—	—	—	—	TMR4IF	—	TMR2IF	TMR1IF	178
T1CON	—	—	CKPS<1:0>		—	$\overline{\text{SYNC}}$	RD16	ON	380
T1GCON	GE	GPOL	GTM	GSPM	GGO/$\overline{\text{DONE}}$	GVAL	—	—	381
T1GATE	—	—	—	GSS<4:0>					383
T1CLK	—	—	—	—	CS<3:0>				382
TMR1L	Holding Register for the Least Significant Byte of the 16-bit TMR1 Register								372
TMR1H	Holding Register for the Most Significant Byte of the 16-bit TMR1 Register								372
T1CKIPPS	—	—	—	T1CKIPPS<4:0>					264
T1GPPS	—	—	—	T1GPPS<4:0>					264
CCPTMRS0	P4TSEL<1:0>		P3TSEL<1:0>		C2TSEL<1:0>		C1TSEL<1:0>		459
CCPxCON	CCPxEN	—	CCPxOUT	CCPxFMT	CCPxMODE<3:0>				459
CLCxSELy	—	—	—	LCxDyS<4:0>					504
ADACT	—	—	—	ACT<4:0>					324

Legend: — = Unimplemented location, read as '0'. Shaded cells are not used with the Timer1 modules.
* Page with register information.

27.0 TIMER2/4 MODULE WITH HARDWARE LIMIT TIMER (HLT)

The Timer2/4 modules are 8-bit timers that can operate as free-running period counters or in conjunction with external signals that control start, run, freeze, and reset operation in One-Shot and Monostable modes of operation. Sophisticated waveform control like pulse density modulation are possible by combining the operation of these timers with other internal peripherals such as the comparators and CCP modules. Features of the timer include:

- 8-bit timer register
- 8-bit period register
- Selectable external hardware timer Resets
- Programmable prescaler (1:1 to 1:128)
- Programmable postscaler (1:1 to 1:16)
- Selectable synchronous/asynchronous operation
- Alternate clock sources
- Interrupt-on-period
- Three modes of operation:
  - Free Running Period
  - One-shot
  - Monostable

See Figure 27-1 for a block diagram of Timer2/4. See Figure 27-2 for the clock source block diagram.

Note: Two identical Timer2 modules are implemented on this device. The timers are named Timer2 and Timer4. All references to Timer2 apply as well to Timer4. All references to T2PR apply as well to T4PR.

FIGURE 27-1: TIMER2/4 BLOCK DIAGRAM

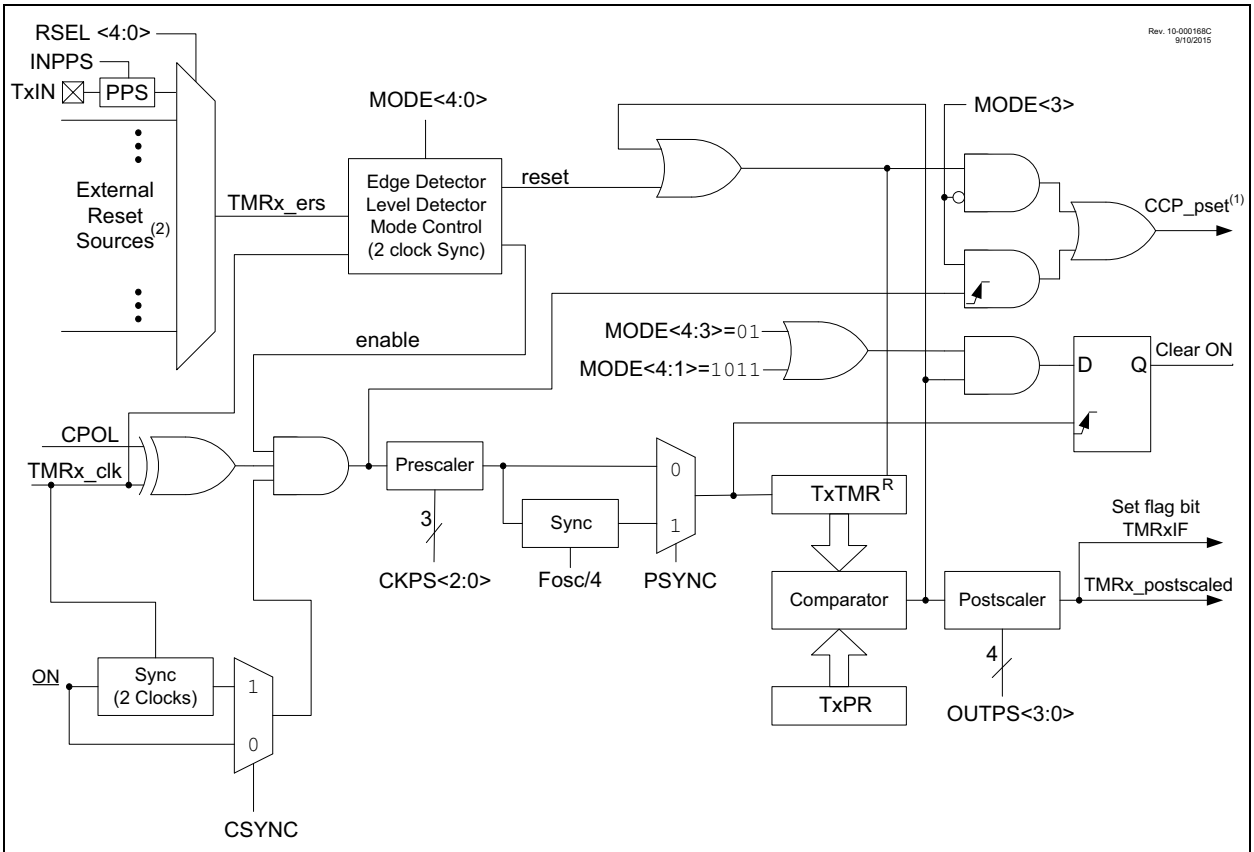

Note 1: Signal to the CCP to trigger the PWM pulse.
2: See Register 27-4 for external Reset sources.

FIGURE 27-2: TIMER2/4 CLOCK SOURCE BLOCK DIAGRAM

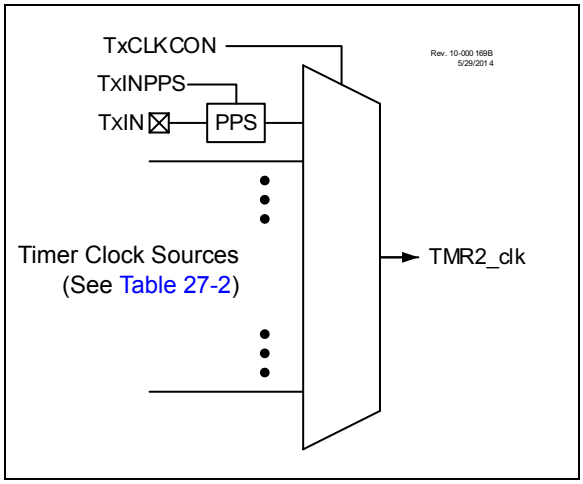

27.1 Timer2/4 Operation

Timer2 operates in three major modes:

- Free Running Period
- One-shot
- Monostable

Within each mode there are several options for starting, stopping, and reset. Table 27-1 lists the options.

In all modes, the TMR2 count register is incremented on the rising edge of the clock signal from the programmable prescaler. When TMR2 equals T2PR, a high level is output to the postscaler counter. TMR2 is cleared on the next clock input.

An external signal from hardware can also be configured to gate the timer operation or force a TMR2 count Reset. In Gate modes the counter stops when the gate is disabled and resumes when the gate is enabled. In Reset modes the TMR2 count is reset on either the level or edge from the external source.

The TMR2 and T2PR registers are both directly readable and writable. The TMR2 register is cleared and the T2PR register initializes to FFh on any device Reset. Both the prescaler and postscaler counters are cleared on the following events:

- a write to the TMR2 register
- a write to the T2CON register
- any device Reset
- External Reset Source event that resets the timer.

Note:	TMR2 is not cleared when T2CON is written.

27.1.1 FREE RUNNING PERIOD MODE

The value of TMR2 is compared to that of the Period register, T2PR, on each TMR2_clk cycle. When the two values match, the comparator resets the value of TMR2 to 00h on the next rising TMR2_clk edge and increments the output postscaler counter. When the postscaler count equals the value in the OUTPS<4:0> bits of the TMRxCON1 register, a one TMR2_clk period wide pulse occurs on the TMR2_postscaled output, and the postscaler count is cleared.

27.1.2 ONE-SHOT MODE

The One-Shot mode is identical to the Free Running Period mode except that the ON bit is cleared and the timer is stopped when TMR2 matches T2PR and will not restart until the T2ON bit is cycled off and on. Postscaler OUTPS<4:0> values other than 0 are meaningless in this mode because the timer is stopped at the first period event and the postscaler is reset when the timer is restarted.

27.1.3 MONOSTABLE MODE

Monostable modes are similar to One-Shot modes except that the ON bit is not cleared and the timer can be restarted by an external Reset event.

27.2 Timer2/4 Output

The Timer2 module's primary output is TMR2_postscaled, which pulses for a single TMR2_clk period when the postscaler counter matches the value in the OUTPS bits of the TMR2CON register. The T2PR postscaler is incremented each time the TMR2 value matches the T2PR value. This signal can be selected as an input to several other input modules:

- The ADC module, as an Auto-conversion Trigger
- COG, as an auto-shutdown source

In addition, the Timer2 is also used by the CCP module for pulse generation in PWM mode. Both the actual TMR2 value as well as other internal signals are sent to the CCP module to properly clock both the period and pulse width of the PWM signal. See **Section 29.0 "Capture/Compare/PWM Modules"** for more details on setting up Timer2/4 for use with the CCP, as well as the timing diagrams in **Section 27.5 "Operation Examples"** for examples of how the varying Timer2 modes affect CCP PWM output.

27.3 External Reset Sources

In addition to the clock source, the Timer2 also takes in an external Reset source. This external Reset source is selected for Timer2 with the T2RST register. This source can control starting and stopping of the timer, as well as resetting the timer, depending on which mode the timer is in. The mode of the timer is controlled by the MODE<4:0> bits of the TMRxHLT register. Edge-Triggered modes require six Timer clock periods between external triggers. Level-Triggered modes require the triggering level to be at least three Timer clock periods long. External triggers are ignored while in Debug Freeze mode.

TABLE 27-1: TIMER2/4 OPERATING MODES

Mode	MODE<4:0>		Output Operation	Operation	Timer Control		
	<4:3>	<2:0>			Start	Reset	Stop
Free Running Period	00	000	Period Pulse	Software gate (Figure 27-4)	ON = 1	—	ON = 0
		001		Hardware gate, active-high (Figure 27-5)	ON = 1 and TMRx_ers = 1	—	ON = 0 or TMRx_ers = 0
		010		Hardware gate, active-low	ON = 1 and TMRx_ers = 0	—	ON = 0 or TMRx_ers = 1
		011	Period Pulse with Hardware Reset	Rising or falling edge Reset	ON = 1	TMRx_ers ↕	ON = 0
		100		Rising edge Reset (Figure 27-6)		TMRx_ers ↑	
		101		Falling edge Reset		TMRx_ers ↓	
		110		Low level Reset		TMRx_ers = 0	ON = 0 or TMRx_ers = 0
		111		High level Reset (Figure 27-7)		TMRx_ers = 1	ON = 0 or TMRx_ers = 1
One-shot	01	000	One-shot	Software start (Figure 27-8)	ON = 1	—	ON = 0 or Next clock after TMRx = PRx (**Note 2**)
		001	Edge triggered start (**Note 1**)	Rising edge start (Figure 27-9)	ON = 1 and TMRx_ers ↑	—	
		010		Falling edge start	ON = 1 and TMRx_ers ↓	—	
		011		Any edge start	ON = 1 and TMRx_ers ↕	—	
		100	Edge triggered start and hardware Reset (**Note 1**)	Rising edge start and Rising edge Reset (Figure 27-10)	ON = 1 and TMRx_ers ↑	TMRx_ers ↑	
		101		Falling edge start and Falling edge Reset	ON = 1 and TMRx_ers ↓	TMRx_ers ↓	
		110		Rising edge start and Low level Reset (Figure 27-11)	ON = 1 and TMRx_ers ↑	TMRx_ers = 0	
		111		Falling edge start and High level Reset	ON = 1 and TMRx_ers ↓	TMRx_ers = 1	
Mono-stable	10	000	Reserved				
		001	Edge triggered start (**Note 1**)	Rising edge start (Figure 27-12)	ON = 1 and TMRx_ers ↑	—	ON = 0 or Next clock after TMRx = PRx (**Note 3**)
		010		Falling edge start	ON = 1 and TMRx_ers ↓	—	
		011		Any edge start	ON = 1 and TMRx_ers ↕	—	
Reserved		100	Reserved				
Reserved		101	Reserved				
One-shot		110	Level triggered start and hardware Reset	High level start and Low level Reset (Figure 27-13)	ON = 1 and TMRx_ers = 1	TMRx_ers = 0	ON = 0 or Held in Reset (**Note 2**)
		111		Low level start & High level Reset	ON = 1 and TMRx_ers = 0	TMRx_ers = 1	
Reserved	11	xxx	Reserved				

Note 1: If ON = 0 then an edge is required to restart the timer after ON = 1.
2: When TMRx = PRx then the next clock clears ON and stops TMRx at 00h.
3: When TMRx = PRx then the next clock stops TMRx at 00h but does not clear ON.

27.4 Timer2/4 Interrupt

Timer2/4 can also generate a device interrupt. The interrupt is generated when the postscaler counter matches one of 16 postscale options (from 1:1 through 1:16), which are selected with the postscaler control bits, OUTPS<3:0> of the T2CON register. The interrupt is enabled by setting the TMR2IE interrupt enable bit of the PIE4 register. Interrupt timing is illustrated in Figure 27-3.

FIGURE 27-3: TIMER2 PRESCALER, POSTSCALER, AND INTERRUPT TIMING DIAGRAM

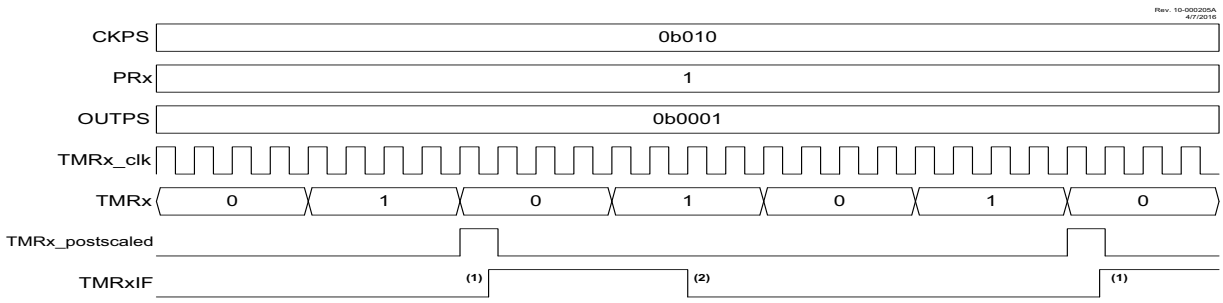

Note 1: Setting the interrupt flag is synchronized with the instruction clock. Synchronization may take as many as 2 instruction cycles
2: Cleared by software.

27.5 Operation Examples

Unless otherwise specified, the following notes apply to the following timing diagrams:

- Both the prescaler and postscaler are set to 1:1 (both the CKPS and OUTPS bits in the TxCON register are cleared).
- The diagrams illustrate any clock except Fosc/4 and show clock-sync delays of at least two full cycles for both ON and Timer2/4_ers. When using Fosc/4, the clock-sync delay is at least one instruction period for Timer2/4_ers; ON applies in the next instruction period.
- The PWM Duty Cycle and PWM output are illustrated assuming that the timer is used for the PWM function of the CCP module as described in **Section 29.0 "Capture/Compare/PWM Modules"**. The signals are not a part of the Timer2/4 module.

27.5.1 SOFTWARE GATE MODE

This mode corresponds to legacy Timer2/4 operation. The timer increments with each clock input when ON = `1` and does not increment when ON = `0`. When the TMRx count equals the PRx period count the timer resets on the next clock and continues counting from 0. Operation with the ON bit software controlled is illustrated in Figure 27-4. With PRx = 5, the counter advances until TMRx = 5, and goes to zero with the next clock.

FIGURE 27-4: SOFTWARE GATE MODE TIMING DIAGRAM (MODE = 00000)

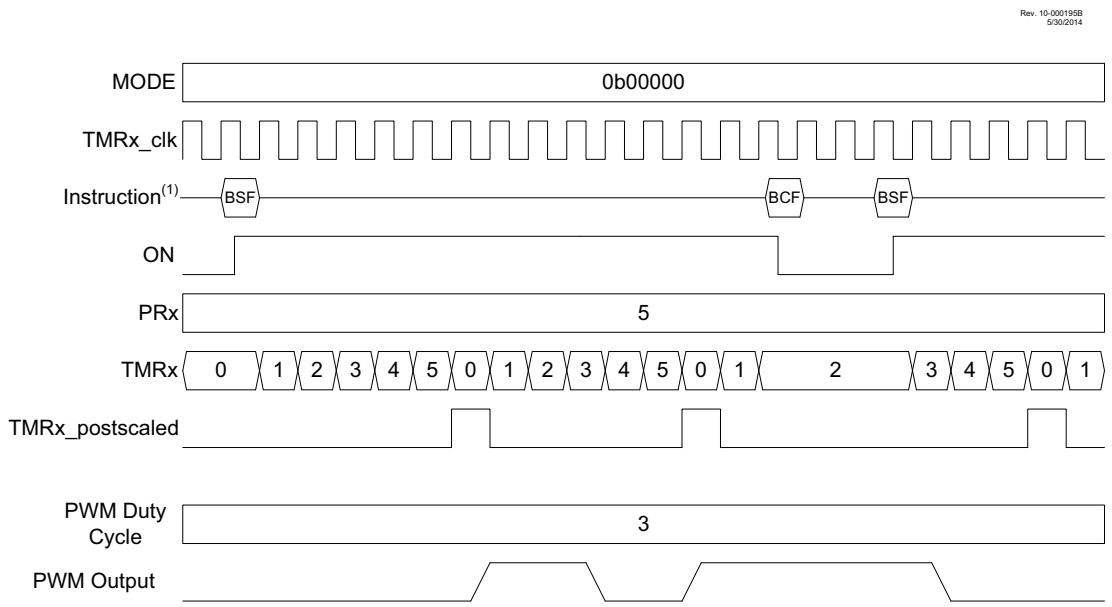

Note 1: BSF and BCF represent Bit-Set File and Bit-Clear File instructions executed by the CPU to set or clear the ON bit of TxCON. CPU execution is asynchronous to the timer clock input.

27.5.2 HARDWARE GATE MODE

The Hardware Gate modes operate the same as the Software Gate mode except the TMRx_ers external signal gates the timer. When used with the CCP the gating extends the PWM period. If the timer is stopped when the PWM output is high then the duty cycle is also extended.

When MODE<4:0> = `00001` then the timer is stopped when the external signal is high. When MODE<4:0> = `00010` then the timer is stopped when the external signal is low.

Figure 27-5 illustrates the Hardware Gating mode for MODE<4:0> = `00001` in which a high input level starts the counter.

FIGURE 27-5: HARDWARE GATE MODE TIMING DIAGRAM (MODE = `00001`)

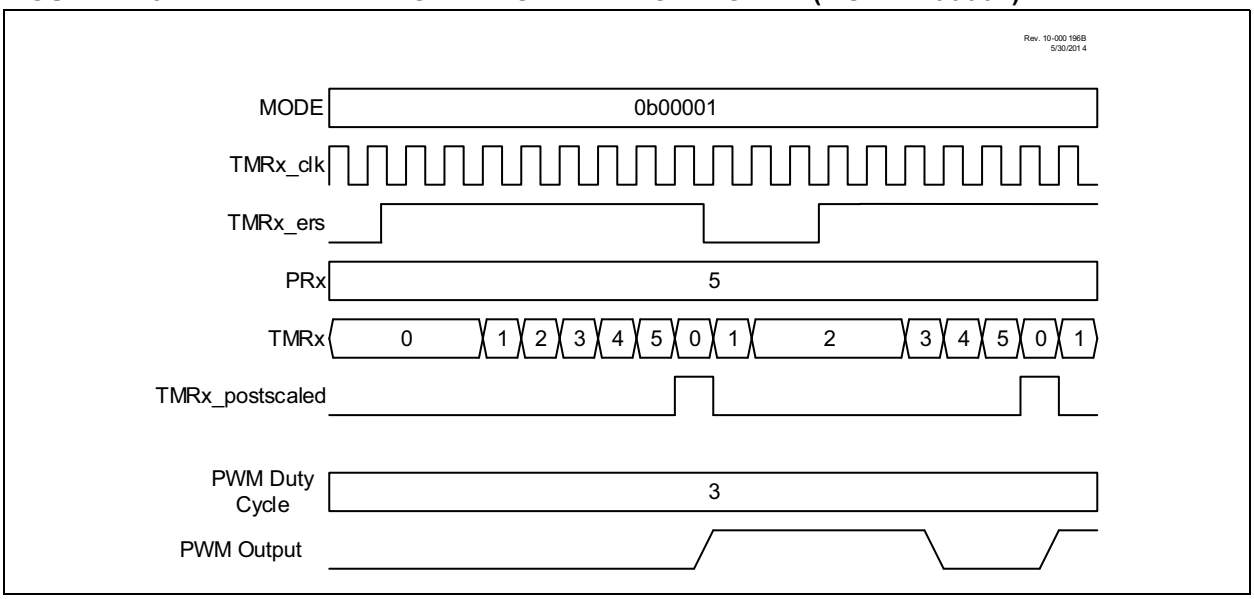

27.5.3 EDGE-TRIGGERED HARDWARE LIMIT MODE

In Hardware Limit mode the timer can be reset by the TMRx_ers external signal before the timer reaches the period count. Three types of Resets are possible:

- Reset on rising or falling edge (MODE<4:0>= `00011`)
- Reset on rising edge (MODE<4:0> = `00100`)
- Reset on falling edge (MODE<4:0> = `00101`)

When the timer is used in conjunction with the CCP in PWM mode then an early Reset shortens the period and restarts the PWM pulse after a two clock delay. Refer to Figure 27-6.

FIGURE 27-6: EDGE-TRIGGERED HARDWARE LIMIT MODE TIMING DIAGRAM (MODE = `00100`)

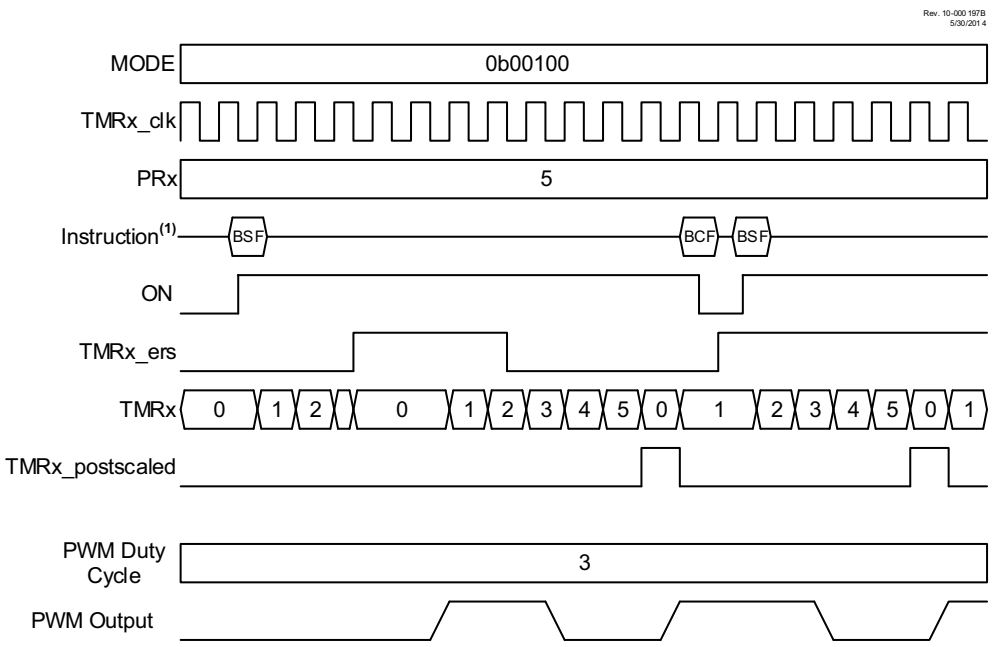

Note 1: BSF and BCF represent Bit-Set File and Bit-Clear File instructions executed by the CPU to set or clear the ON bit of TxCON. CPU execution is asynchronous to the timer clock input.

27.5.4 LEVEL-TRIGGERED HARDWARE LIMIT MODE

In the Level-Triggered Hardware Limit Timer modes the counter is reset by high or low levels of the external signal TMRx_ers, as shown in Figure 27-7. Selecting MODE<4:0> = `00110` will cause the timer to reset on a low level external signal. Selecting MODE<4:0> = `00111` will cause the timer to reset on a high level external signal. In the example, the counter is reset while TMRx_ers = `1`. ON is controlled by `BSF` and `BCF` instructions. When ON = `0` the external signal is ignored.

When the CCP uses the timer as the PWM time base then the PWM output will be set high when the timer starts counting and then set low only when the timer count matches the CCPRx value. The timer is reset when either the timer count matches the PRx value or two clock periods after the external Reset signal goes true and stays true.

The timer starts counting, and the PWM output is set high, on either the clock following the PRx match or two clocks after the external Reset signal relinquishes the Reset. The PWM output will remain high until the timer counts up to match the CCPRx pulse width value. If the external Reset signal goes true while the PWM output is high then the PWM output will remain high until the Reset signal is released allowing the timer to count up to match the CCPRx value.

FIGURE 27-7: LEVEL-TRIGGERED HARDWARE LIMIT MODE TIMING DIAGRAM (MODE = `00111`)

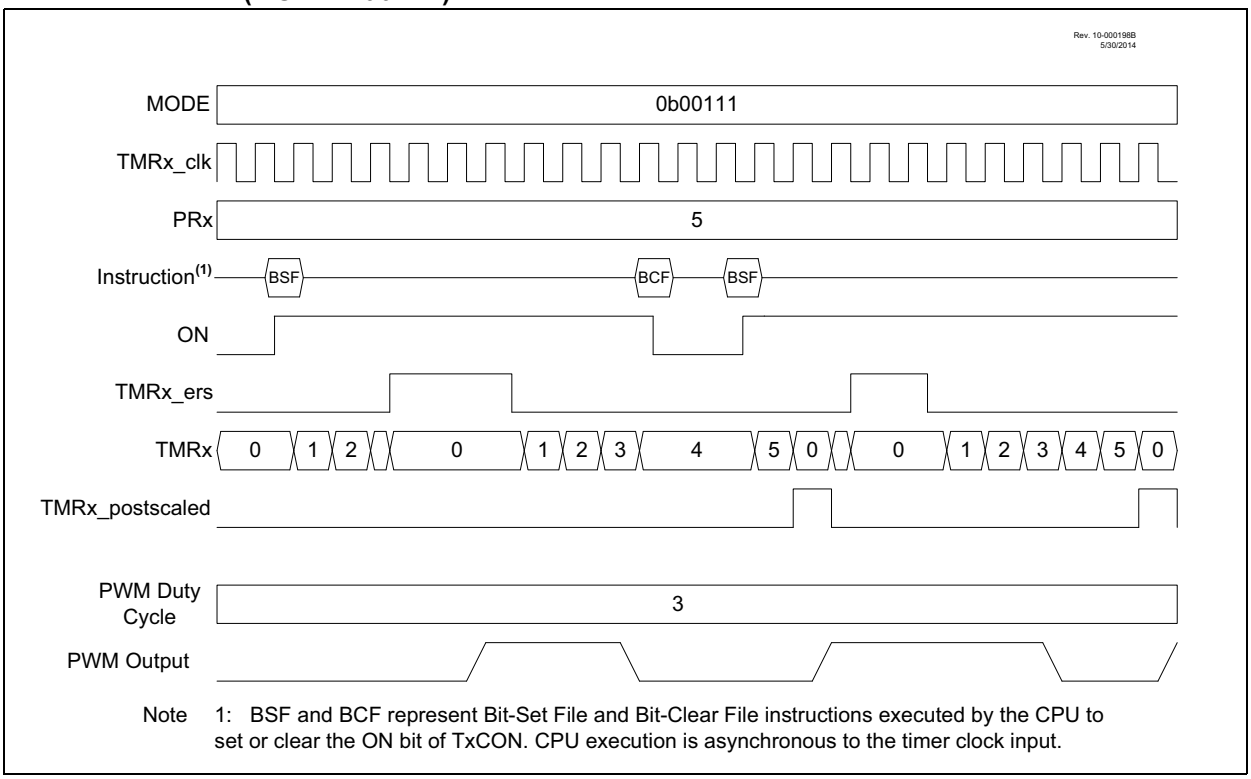

Note 1: BSF and BCF represent Bit-Set File and Bit-Clear File instructions executed by the CPU to set or clear the ON bit of TxCON. CPU execution is asynchronous to the timer clock input.

27.5.5 SOFTWARE START ONE-SHOT MODE

In One-Shot mode the timer resets and the ON bit is cleared when the timer value matches the PRx period value. The ON bit must be set by software to start another timer cycle. Setting MODE<4:0> = `01000` selects One-Shot mode which is illustrated in Figure 27-8. In the example, ON is controlled by `BSF` and `BCF` instructions. In the first case, a `BSF` instruction sets ON and the counter runs to completion and clears ON. In the second case, a `BSF` instruction starts the cycle, `BCF`/`BSF` instructions turn the counter off and on during the cycle, and then it runs to completion.

When One-Shot mode is used in conjunction with the CCP PWM operation the PWM pulse drive starts concurrent with setting the ON bit. Clearing the ON bit while the PWM drive is active will extend the PWM drive. The PWM drive will terminate when the timer value matches the CCPRx pulse width value. The PWM drive will remain off until software sets the ON bit to start another cycle. If software clears the ON bit after the CCPRx match but before the PRx match then the PWM drive will be extended by the length of time the ON bit remains cleared. Another timing cycle can only be initiated by setting the ON bit after it has been cleared by a PRx period count match.

FIGURE 27-8: SOFTWARE START ONE-SHOT MODE TIMING DIAGRAM (MODE = `01000`)

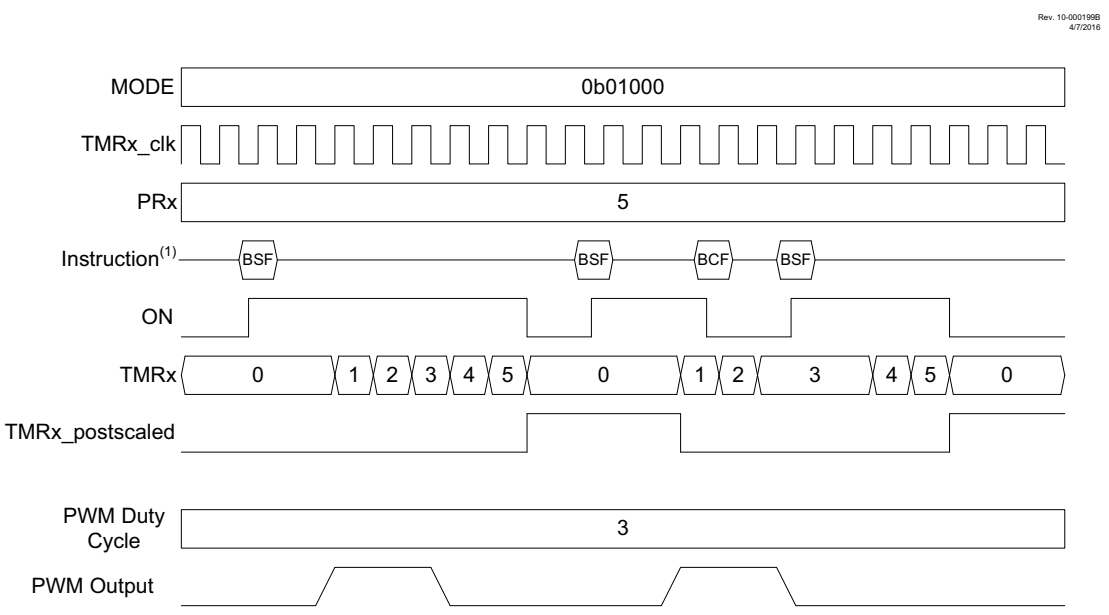

Note 1: BSF and BCF represent Bit-Set File and Bit-Clear File instructions executed by the CPU to set or clear the ON bit of TxCON. CPU execution is asynchronous to the timer clock input.

27.5.6 EDGE-TRIGGERED ONE-SHOT MODE

The Edge-Triggered One-Shot modes start the timer on an edge from the external signal input, after the ON bit is set, and clear the ON bit when the timer matches the PRx period value. The following edges will start the timer:

- Rising edge (MODE<4:0> = `01001`)
- Falling edge (MODE<4:0> = `01010`)
- Rising or Falling edge (MODE<4:0> = `01011`)

If the timer is halted by clearing the ON bit then another TMRx_ers edge is required after the ON bit is set to resume counting. Figure 27-9 illustrates operation in the rising edge One-Shot mode.

When Edge-Triggered One-Shot mode is used in conjunction with the CCP then the edge-trigger will activate the PWM drive and the PWM drive will deactivate when the timer matches the CCPRx pulse width value and stay deactivated when the timer halts at the PRx period count match.

FIGURE 27-9: EDGE-TRIGGERED ONE-SHOT MODE TIMING DIAGRAM (MODE = `01001`)

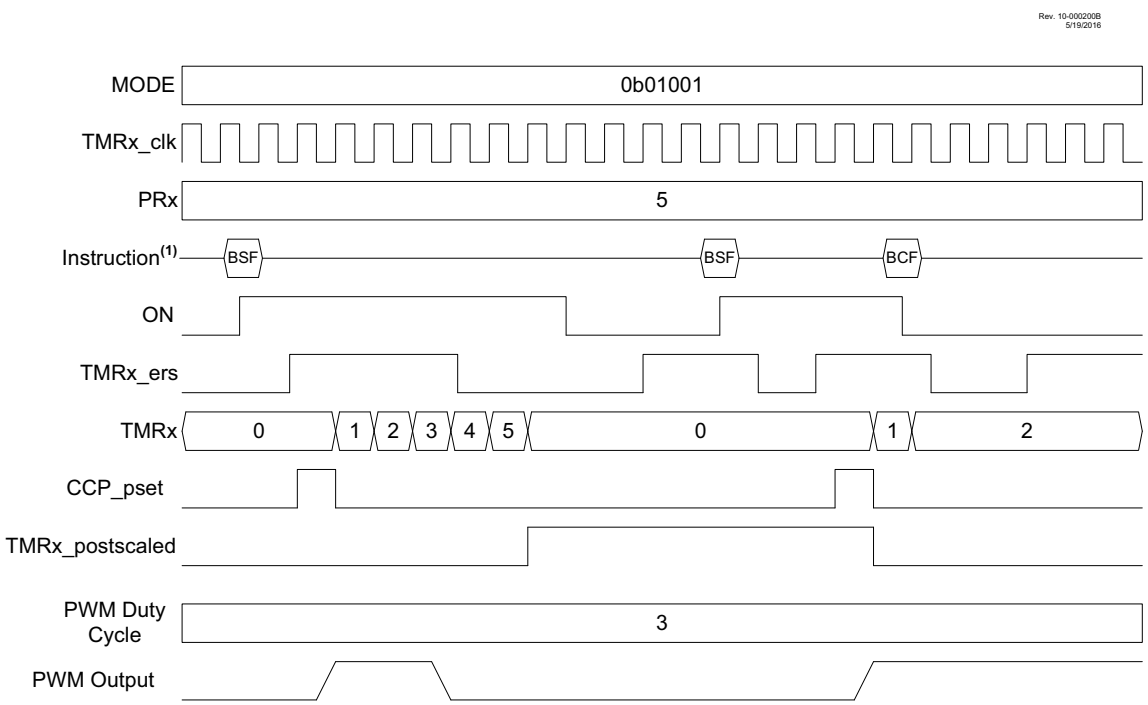

Note 1: BSF and BCF represent Bit-Set File and Bit-Clear File instructions executed by the CPU to set or clear the ON bit of TxCON. CPU execution is asynchronous to the timer clock input.

27.5.7 EDGE-TRIGGERED HARDWARE LIMIT ONE-SHOT MODE

In Edge-Triggered Hardware Limit One-Shot modes the timer starts on the first external signal edge after the ON bit is set and resets on all subsequent edges. Only the first edge after the ON bit is set is needed to start the timer. The counter will resume counting automatically two clocks after all subsequent external Reset edges. Edge triggers are as follows:

- Rising edge start and Reset (MODE<4:0> = `01100`)
- Falling edge start and Reset (MODE<4:0> = `01101`)

The timer resets and clears the ON bit when the timer value matches the PRx period value. External signal edges will have no effect until after software sets the ON bit. Figure 27-10 illustrates the rising edge hardware limit one-shot operation.

When this mode is used in conjunction with the CCP then the first starting edge trigger, and all subsequent Reset edges, will activate the PWM drive. The PWM drive will deactivate when the timer matches the CCPRx pulse-width value and stay deactivated until the timer halts at the PRx period match unless an external signal edge resets the timer before the match occurs.

FIGURE 27-10: EDGE-TRIGGERED HARDWARE LIMIT ONE-SHOT MODE TIMING DIAGRAM (MODE = 01100)

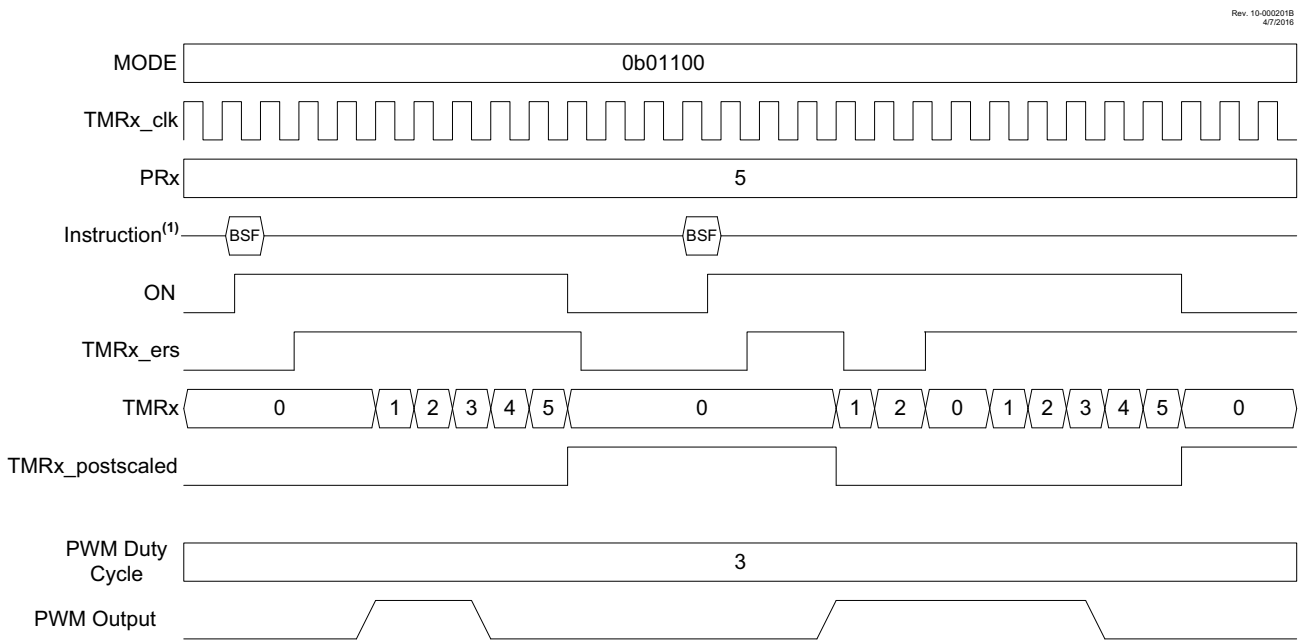

Note 1: BSF and BCF represent Bit-Set File and Bit-Clear File instructions executed by the CPU to set or clear the ON bit of TxCON. CPU execution is asynchronous to the timer clock input.

© 2017-2019 Microchip Technology Inc.

27.5.8 LEVEL RESET, EDGE-TRIGGERED HARDWARE LIMIT ONE-SHOT MODES

In Level -Triggered One-Shot mode the timer count is reset on the external signal level and starts counting on the rising/falling edge of the transition from Reset level to the active level while the ON bit is set. Reset levels are selected as follows:

- Low Reset level (MODE<4:0> = `01110`)
- High Reset level (MODE<4:0> = `01111`)

When the timer count matches the PRx period count, the timer is reset and the ON bit is cleared. When the ON bit is cleared by either a PRx match or by software control a new external signal edge is required after the ON bit is set to start the counter.

When Level-Triggered Reset One-Shot mode is used in conjunction with the CCP PWM operation the PWM drive goes active with the external signal edge that starts the timer. The PWM drive goes inactive when the timer count equals the CCPRx pulse width count. The PWM drive does not go active when the timer count clears at the PRx period count match.

FIGURE 27-11: LOW LEVEL RESET, EDGE-TRIGGERED HARDWARE LIMIT ONE-SHOT MODE TIMING DIAGRAM (MODE = 01110)

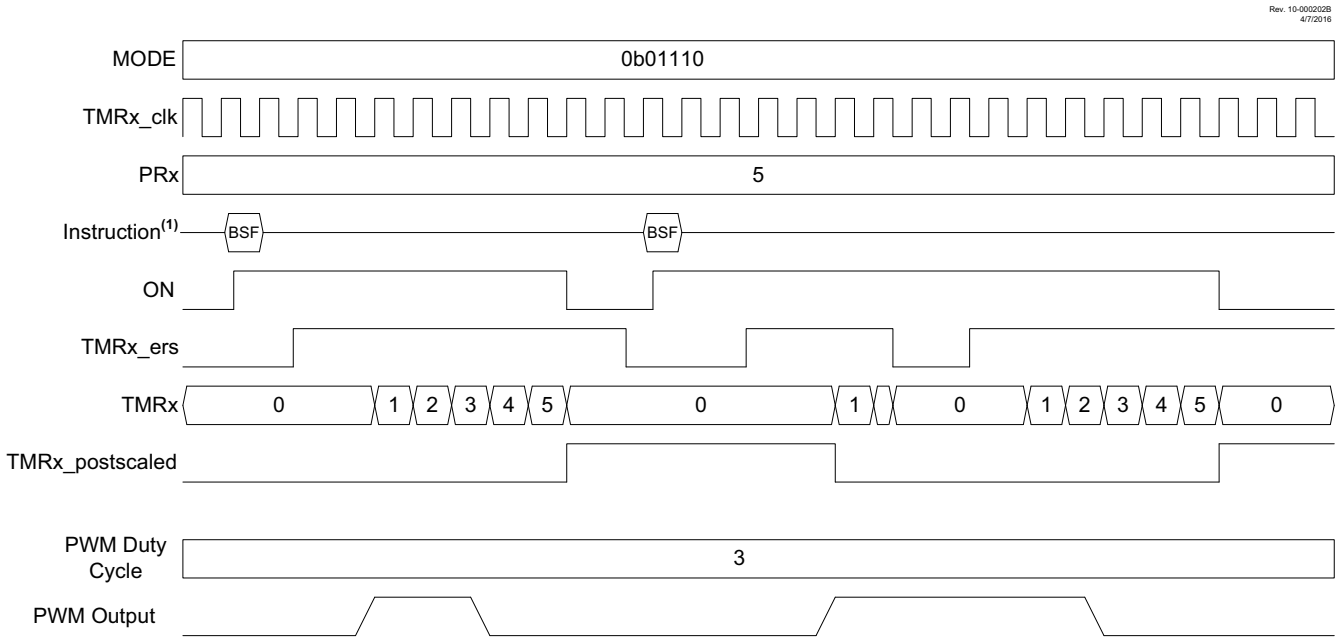

Note 1: BSF and BCF represent Bit-Set File and Bit-Clear File instructions executed by the CPU to set or clear the ON bit of TxCON. CPU execution is asynchronous to the timer clock input.

© 2017-2019 Microchip Technology Inc.

27.5.9 EDGE-TRIGGERED MONOSTABLE MODES

The Edge-Triggered Monostable modes start the timer on an edge from the external Reset signal input, after the ON bit is set, and stop incrementing the timer when the timer matches the PRx period value. The following edges will start the timer:

- Rising edge (MODE<4:0> = `10001`)
- Falling edge (MODE<4:0> = `10010`)
- Rising or Falling edge (MODE<4:0> = `10011`)

When an Edge-Triggered Monostable mode is used in conjunction with the CCP PWM operation the PWM drive goes active with the external Reset signal edge that starts the timer, but will not go active when the timer matches the PRx value. While the timer is incrementing, additional edges on the external Reset signal will not affect the CCP PWM.

FIGURE 27-12: RISING EDGE-TRIGGERED MONOSTABLE MODE TIMING DIAGRAM (MODE = 10001)

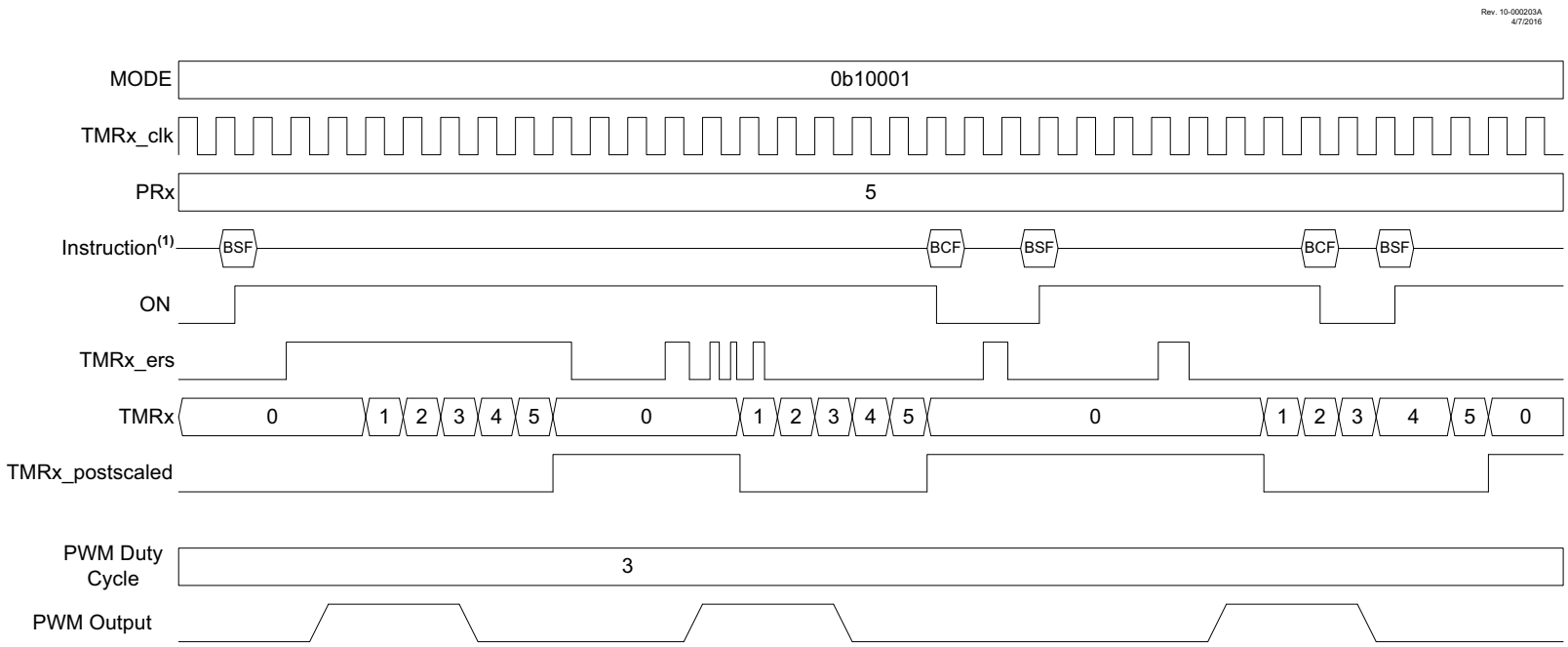

Note 1: BSF and BCF represent Bit-Set File and Bit-Clear File instructions executed by the CPU to set or clear the ON bit of TxCON. CPU execution is asynchronous to the timer clock input.

© 2017-2019 Microchip Technology Inc.

27.5.10 LEVEL-TRIGGERED HARDWARE LIMIT ONE-SHOT MODES

The Level-Triggered Hardware Limit One-Shot modes hold the timer in Reset on an external Reset level and start counting when both the ON bit is set and the external signal is not at the Reset level. If one of either the external signal is not in Reset or the ON bit is set then the other signal being set/made active will start the timer. Reset levels are selected as follows:

- Low Reset level (MODE<4:0> = `10110`)
- High Reset level (MODE<4:0> = `10111`)

When the timer count matches the PRx period count, the timer is reset and the ON bit is cleared. When the ON bit is cleared by either a PRx match or by software control the timer will stay in Reset until both the ON bit is set and the external signal is not at the Reset level.

When Level-Triggered Hardware Limit One-Shot modes are used in conjunction with the CCP PWM operation the PWM drive goes active with either the external signal edge or the setting of the ON bit, whichever of the two starts the timer.

FIGURE 27-13: LEVEL-TRIGGERED HARDWARE LIMIT ONE-SHOT MODE TIMING DIAGRAM (MODE = 10110)

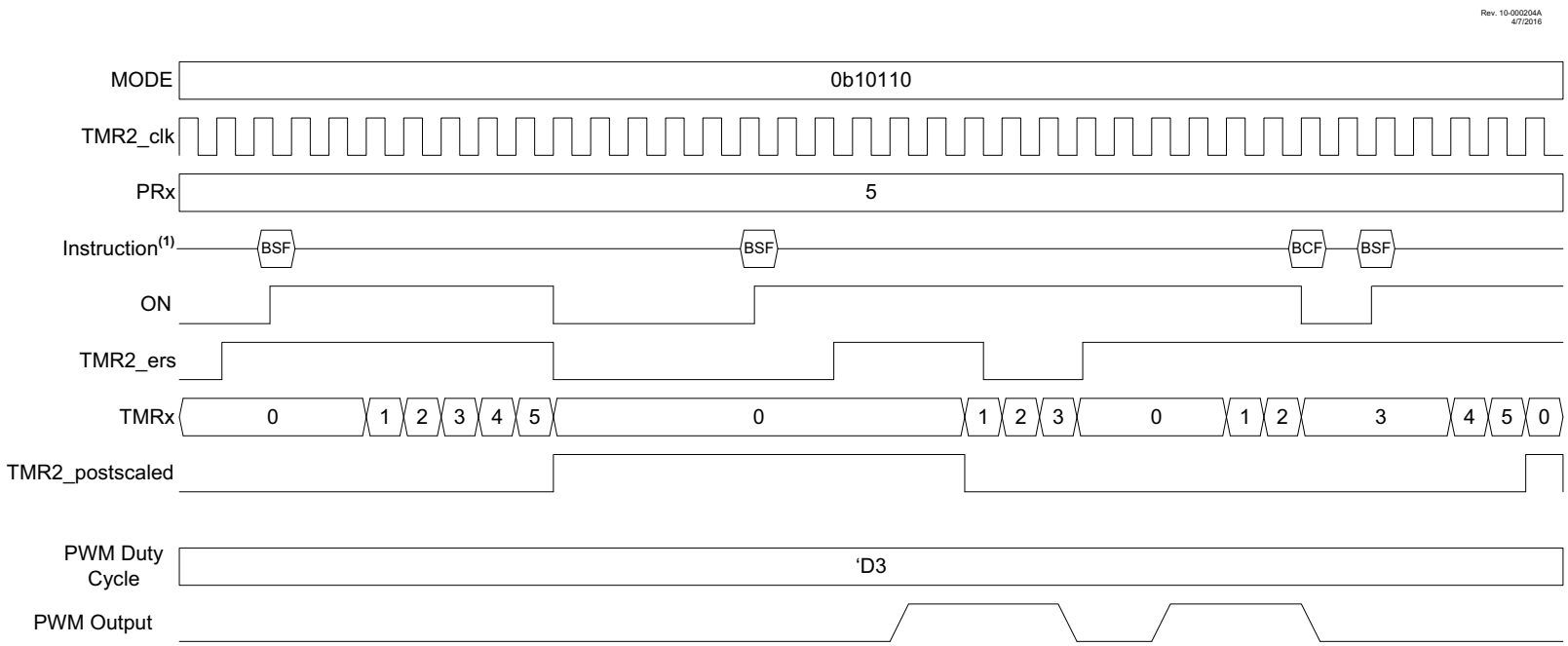

Note 1: BSF and BCF represent Bit-Set File and Bit-Clear File instructions executed by the CPU to set or clear the ON bit of TxCON. CPU execution is asynchronous to the timer clock input.

© 2017-2019 Microchip Technology Inc.

27.6 Timer2/4 Operation During Sleep

When PSYNC = 1, Timer2/4 cannot be operated while the processor is in Sleep mode. The contents of the TMR2 and T2PR registers will remain unchanged while processor is in Sleep mode.

When PSYNC = 0, Timer2/4 will operate in Sleep as long as the clock source selected is also still running. Selecting the LFINTOSC, MFINTOSC, or HFINTOSC oscillator as the timer clock source will keep the selected oscillator running during Sleep.

27.7 Register Definitions: Timer2/4 Control

REGISTER 27-1: TxCLKCON: TIMER2/4 CLOCK SELECTION REGISTER

U-0	U-0	U-0	U-0	R/W-0/0	R/W-0/0	R/W-0/0	R/W-0/0
—	—	—	—	CS<3:0>			
bit 7							bit 0

Legend:		
R = Readable bit	W = Writable bit	U = Unimplemented bit, read as ‘0’
u = Bit is unchanged	x = Bit is unknown	-n/n = Value at POR and BOR/Value at all other Resets
‘1’ = Bit is set	‘0’ = Bit is cleared	

bit 7-4 **Unimplemented:** Read as ‘0’

bit 3-0 **CS<3:0>:** Timer2/4 Clock Select bits

1111 = Reserved
1110 = Reserved
1101 = Reserved
1100 = LC4_out
1011 = LC3_out
1010 = LC2_out
1001 = LC1_out
1000 = ZCD1_output
0111 = SOSC
0110 = MFINTOSC/16 (31.25 kHz)
0101 = MFINTOSC (500 kHz)
0100 = LFINTOSC
0011 = HFINTOSC (32 MHz)
0010 = FOSC
0001 = FOSC/4
0000 = T2CKIPPS

REGISTER 27-2: TxCON: TIMER2/4 CONTROL REGISTER

R/W/HC-0/0	R/W-0/0	R/W-0/0	R/W-0/0	R/W-0/0	R/W-0/0	R/W-0/0	R/W-0/0
ON(1)	CKPS<2:0>			OUTPS<3:0>			
bit 7							bit 0

Legend:		
R = Readable bit	W = Writable bit	U = Unimplemented bit, read as ‘0’
u = Bit is unchanged	x = Bit is unknown	-n/n = Value at POR and BOR/Value at all other Resets
‘1’ = Bit is set	‘0’ = Bit is cleared	HC = Bit is cleared by hardware

bit 7 **ON:** Timer2/4 On bit
`1` = Timer2/4 is on
`0` = Timer2/4 is off: all counters and state machines are reset

bit 6-4 **CKPS<2:0>:** Timer2/4-type Clock Prescale Select bits
`111` = 1:128 Prescaler
`110` = 1:64 Prescaler
`101` = 1:32 Prescaler
`100` = 1:16 Prescaler
`011` = 1:8 Prescaler
`010` = 1:4 Prescaler
`001` = 1:2 Prescaler
`000` = 1:1 Prescaler

bit 3-0 **OUTPS<3:0>:** Timer2/4 Output Postscaler Select bits
`1111` = 1:16 Postscaler
`1110` = 1:15 Postscaler
`1101` = 1:14 Postscaler
`1100` = 1:13 Postscaler
`1011` = 1:12 Postscaler
`1010` = 1:11 Postscaler
`1001` = 1:10 Postscaler
`1000` = 1:9 Postscaler
`0111` = 1:8 Postscaler
`0110` = 1:7 Postscaler
`0101` = 1:6 Postscaler
`0100` = 1:5 Postscaler
`0011` = 1:4 Postscaler
`0010` = 1:3 Postscaler
`0001` = 1:2 Postscaler
`0000` = 1:1 Postscaler

Note 1: In certain modes, the ON bit will be auto-cleared by hardware. See **Section 27.5 “Operation Examples”**.

REGISTER 27-3: TxHLT: TIMER2/4 HARDWARE LIMIT CONTROL REGISTER

R/W-0/0	R/W-0/0	R/W-0/0	R/W-0/0	R/W-0/0	R/W-0/0	R/W-0/0	R/W-0/0
PSYNC(1, 2)	CKPOL(3)	CKSYNC(4, 5)	MODE<4:0>(6, 7)				
bit 7							bit 0

Legend:		
R = Readable bit	W = Writable bit	U = Unimplemented bit, read as ‘0’
u = Bit is unchanged	x = Bit is unknown	-n/n = Value at POR and BOR/Value at all other Resets
‘1’ = Bit is set	‘0’ = Bit is cleared	

bit 7 **PSYNC:** Timer2/4 Prescaler Synchronization Enable bit(1, 2)
`1` = TMRx Prescaler Output is synchronized to Fosc/4
`0` = TMRx Prescaler Output is not synchronized to Fosc/4

bit 6 **CKPOL:** Timer2/4 Clock Polarity Selection bit(3)
`1` = Falling edge of input clock clocks timer/prescaler
`0` = Rising edge of input clock clocks timer/prescaler

bit 5 **CKSYNC:** Timer2/4 Clock Synchronization Enable bit(4, 5)
`1` = ON register bit is synchronized to TMR2_clk input
`0` = ON register bit is not synchronized to TMR2_clk input

bit 4-0 **MODE<4:0>:** Timer2/4 Control Mode Selection bits(6, 7)
See Table 27-1.

Note 1: Setting this bit ensures that reading TMRx will return a valid value.
2: When this bit is ‘`1`’, Timer2/4 cannot operate in Sleep mode.
3: CKPOL should not be changed while ON = `1`.
4: Setting this bit ensures glitch-free operation when the ON is enabled or disabled.
5: When this bit is set then the timer operation will be delayed by two TMRx input clocks after the ON bit is set.
6: Unless otherwise indicated, all modes start upon ON = `1` and stop upon ON = `0` (stops occur without affecting the value of TMRx).
7: When TMRx = PRx, the next clock clears TMRx, regardless of the operating mode.

REGISTER 27-4: TxRST: TIMER2/4 EXTERNAL RESET SIGNAL SELECTION REGISTER

U-0	U-0	U-0	U-0	R/W-0/0	R/W-0/0	R/W-0/0	R/W-0/0
—	—	—	—	RSEL<3:0>			
bit 7							bit 0

Legend:		
R = Readable bit	W = Writable bit	U = Unimplemented bit, read as ‘0’
u = Bit is unchanged	x = Bit is unknown	-n/n = Value at POR and BOR/Value at all other Resets
‘1’ = Bit is set	‘0’ = Bit is cleared	

bit 7-4 **Unimplemented:** Read as ‘0’

bit 3-0 **RSEL<3:0>:** Timer2/4 External Reset Signal Source Selection bits
1111 = Reserved
1110 = RTCC_Seconds
1101 = LC4_out
1100 = LC3_out
1011 = LC2_out
1010 = LC1_out
1001 = ZCD1_output
1000 = C2OUT_sync
0111 = C1OUT_sync
0110 = PWM3_out
0101 = PWM4_out
0100 = CCP2_out
0011 = CCP1_out
0010 = TMR4_postscaled(2)
0001 = TMR2_postscaled(1)
0000 = T2INPPS

Note 1: For Timer2, this bit is Reserved.
2: For Timer4, this bit is Reserved.

TABLE 27-2: SUMMARY OF REGISTERS ASSOCIATED WITH TIMER2/4

Name	Bit 7	Bit 6	Bit 5	Bit 4	Bit 3	Bit 2	Bit 1	Bit 0	Register on Page
CCP1CON	EN	—	OUT	FMT	MODE<3:0>				459
CCP2CON	EN	—	OUT	FMT	MODE<3:0>				459
CCPTMRS0	P4TSEL<1:0>		P3TSEL<1:0>		C2TSEL<1:0>		C1TSEL<1:0>		462
INTCON	GIE	PEIE	—	—	—	—	—	INTEDG	164
PIE1	OSFIE	CSWIE	—	—	—	—	ADTIE	ADIE	166
PIR1	OSFIF	CSWIF	—	—	—	—	ADTIF	ADIF	175
T2TMR	TMR2<7:0>								385*
T2PR	PR2 <7:0>								385*
T2CON	ON	CKPS <2:0>			OUTPS <3:0>				405
T2HLT	PSYNC	CKPOL	CKSYNC	MODE<4:0>					406
T2CLKCON	—	—	—	—	CS <3:0>				404
T2RST	—	—	—	—	RSEL <3:0>				407
T4TMR	TMR4<7:0>								385*
T4PR	PR4 <7:0>								385*
T4CON	ON	CKPS <2:0>			OUTPS <3:0>				405
T4HLT	PSYNC	CKPOL	CKSYNC	MODE<4:0>					406
T4CLKCON	—	—	—	—	CS <3:0>				404
T4RST	—	—	—	—	RSEL <3:0>				407

Legend: — = unimplemented location, read as '0'. Shaded cells are not used for Timer2/4 module.
* Page provides register information.

28.0 SIGNAL MEASUREMENT TIMER (SMT)

The SMT is a 24-bit counter with advanced clock and gating logic, which can be configured for measuring a variety of digital signal parameters such as pulse width, frequency and duty cycle, and the time difference between edges on two signals.

Features of the SMT include:

- 24-bit timer/counter
  - Three 8-bit registers (SMTxTMRL/H/U)
  - Readable and writable
  - Optional 16-bit operating mode
- Two 24-bit measurement capture registers
- One 24-bit period match register
- Multi-mode operation, including relative timing measurement
- Interrupt on period match
- Multiple clock, gate and signal sources
- Interrupt on acquisition complete
- Ability to read current input values

FIGURE 28-1: SMTx BLOCK DIAGRAM

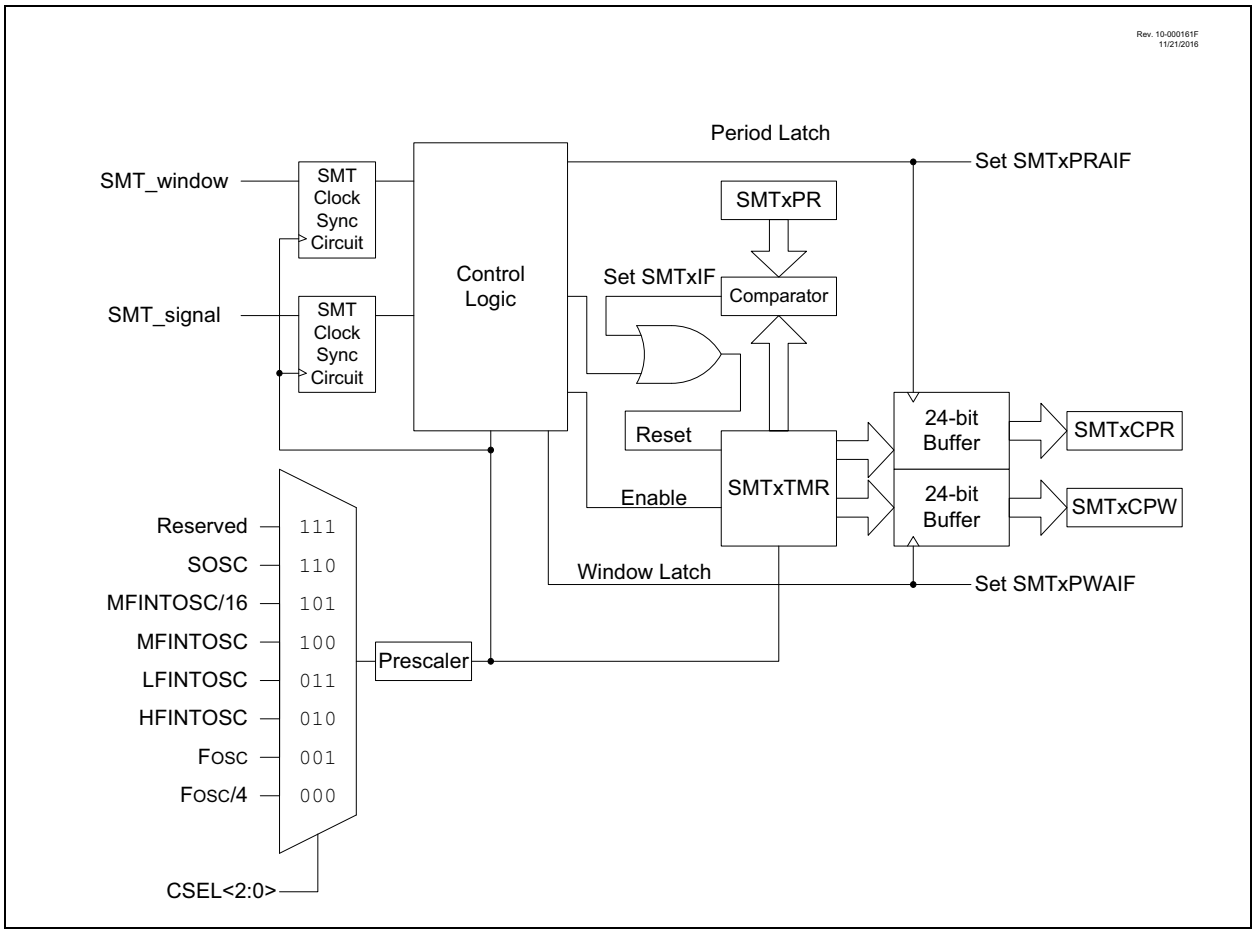

FIGURE 28-2: SMTx SIGNAL AND WINDOW BLOCK DIAGRAM

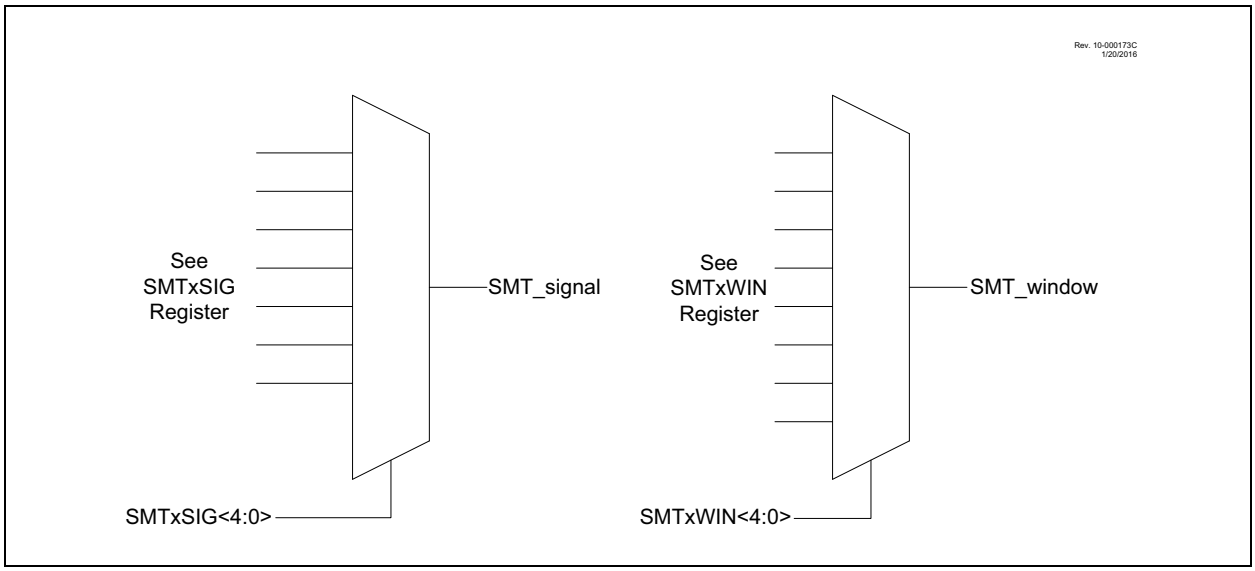

28.1 Register Definitions: SMT Control

Long bit name prefixes for the SMT peripherals are shown in Table 28-1. Refer to **Section 1.1.2.2 "Long Bit Names"** for more information.

TABLE 28-1:

Peripheral	Bit Name Prefix
SMT1	SMT1

REGISTER 28-1: SMTxCON0: SMT CONTROL REGISTER 0

R/W-0/0	U-0	R/W-0/0	R/W-0/0	R/W-0/0	R/W-0/0	R/W-0/0	R/W-0/0
EN(1)	—	STP	WPOL	SPOL	CPOL	SMTxPS<1:0>	
bit 7							bit 0

Legend:		
R = Readable bit	W = Writable bit	U = Unimplemented bit, read as '0'
u = Bit is unchanged	x = Bit is unknown	-n/n = Value at POR and BOR/Value at all other Resets
'1' = Bit is set	'0' = Bit is cleared	

bit 7 **EN:** SMT Enable bit(1)
1 = SMT is enabled
0 = SMT is disabled; internal states are reset, clock requests are disabled

bit 6 **Unimplemented**: Read as '0'

bit 5 **STP:** SMT Counter Halt Enable bit
When SMTxTMR = SMTxPR:
1 = Counter remains SMTxPR; period match interrupt occurs when clocked
0 = Counter resets to 24'h000000; period match interrupt occurs when clocked

bit 4 **WPOL:** SMTxWIN Input Polarity Control bit
1 = SMTxWIN signal is active-low/falling edge enabled
0 = SMTxWIN signal is active-high/rising edge enabled

bit 3 **SPOL:** SMTxSIG Input Polarity Control bit
1 = SMTx_signal is active-low/falling edge enabled
0 = SMTx_signal is active-high/rising edge enabled

bit 2 **CPOL:** SMT Clock Input Polarity Control bit
1 = SMTxTMR increments on the falling edge of the selected clock signal
0 = SMTxTMR increments on the rising edge of the selected clock signal

bit 1-0 **SMTxPS<1:0>:** SMT Prescale Select bits
11 = Prescaler = 1:8
10 = Prescaler = 1:4
01 = Prescaler = 1:2
00 = Prescaler = 1:1

Note 1: Setting EN to '0' does not affect the register contents.

REGISTER 28-2: SMTxCON1: SMT CONTROL REGISTER 1

R/W/HC-0/0	R/W-0/0	U-0	U-0	R/W-0/0	R/W-0/0	R/W-0/0	R/W-0/0
SMTxGO	REPEAT	—	—	MODE<3:0>			
bit 7							bit 0

Legend:		
HC = Bit is cleared by hardware		HS = Bit is set by hardware
R = Readable bit	W = Writable bit	U = Unimplemented bit, read as ‘0’
u = Bit is unchanged	x = Bit is unknown	-n/n = Value at POR and BOR/Value at all other Resets
‘1’ = Bit is set	‘0’ = Bit is cleared	q = Value depends on condition

bit 7 **SMTxGO:** SMT GO Data Acquisition bit
1 = Incrementing, acquiring data is enabled
0 = Incrementing, acquiring data is disabled

bit 6 **REPEAT:** SMT Repeat Acquisition Enable bit
1 = Repeat Data Acquisition mode is enabled
0 = Single Acquisition mode is enabled

bit 5-4 **Unimplemented**: Read as ‘0’

bit 3-0 **MODE<3:0>** SMT Operation Mode Select bits
1111 = Reserved
•
•
•
1011 = Reserved
1010 = Windowed counter
1001 = Gated counter
1000 = Counter
0111 = Capture
0110 = Time of flight
0101 = Gated windowed measure
0100 = Windowed measure
0011 = High and low time measurement
0010 = Period and Duty-Cycle Acquisition
0001 = Gated Timer
0000 = Timer

REGISTER 28-3: SMTxSTAT: SMT STATUS REGISTER

R/W/HC-0/0	R/W/HC-0/0	R/W/HC-0/0	U-0	U-0	R-0/0	R-0/0	R-0/0
CPRUP	CPWUP	RST	—	—	TS	WS	AS
bit 7							bit 0

Legend:		
HC = Bit is cleared by hardware		HS = Bit is set by hardware
R = Readable bit	W = Writable bit	U = Unimplemented bit, read as ‘0’
u = Bit is unchanged	x = Bit is unknown	-n/n = Value at POR and BOR/Value at all other Resets
‘1’ = Bit is set	‘0’ = Bit is cleared	q = Value depends on condition

bit 7 **CPRUP:** SMT Manual Period Buffer Update bit
1 = Request update to SMTxCPRx registers
0 = SMTxCPRx registers update is complete

bit 6 **CPWUP:** SMT Manual Pulse Width Buffer Update bit
1 = Request update to SMTxCPW registers
0 = SMTxCPW registers update is complete

bit 5 **RST:** SMT Manual Timer Reset bit
1 = Request Reset to SMTxTMR registers
0 = SMTxTMR registers update is complete

bit 4-3 **Unimplemented**: Read as ‘0’

bit 2 **TS:** SMT GO Value Status bit
1 = SMT timer is incrementing
0 = SMT timer is not incrementing

bit 1 **WS:** SMTxWIN Value Status bit
1 = SMT window is open
0 = SMT window is closed

bit 0 **AS:** SMT_signal Value Status bit
1 = SMT acquisition is in progress
0 = SMT acquisition is not in progress

REGISTER 28-4: SMTxCLK: SMT CLOCK SELECTION REGISTER

U-0	U-0	U-0	U-0	U-0	R/W-0/0	R/W-0/0	R/W-0/0
—	—	—	—	—	CSEL<2:0>		
bit 7							bit 0

Legend:		
R = Readable bit	W = Writable bit	U = Unimplemented bit, read as ‘0’
u = Bit is unchanged	x = Bit is unknown	-n/n = Value at POR and BOR/Value at all other Resets
‘1’ = Bit is set	‘0’ = Bit is cleared	q = Value depends on condition

bit 7-3 **Unimplemented**: Read as ‘0’

bit 2-0 **CSEL<2:0>:** SMT Clock Selection bits

111 = Reserved
110 = SOSC
101 = MFINTOSC/16 (31.25 kHz)
100 = MFINTOSC (500 kHz)
011 = LFINTOSC
010 = HFINTOSC
001 = FOSC
000 = FOSC/4

REGISTER 28-5: SMTxWIN: SMTx WINDOW INPUT SELECT REGISTER

U-0	U-0	U-0	R/W-0/0	R/W-0/0	R/W-0/0	R/W-0/0	R/W-0/0
—	—	—	WSEL<4:0>				
bit 7							bit 0

Legend:		
R = Readable bit	W = Writable bit	U = Unimplemented bit, read as ‘0’
u = Bit is unchanged	x = Bit is unknown	-n/n = Value at POR and BOR/Value at all other Resets
‘1’ = Bit is set	‘0’ = Bit is cleared	q = Value depends on condition

bit 7-5 **Unimplemented**: Read as ‘0’

bit 4-0 **WSEL<4:0>:** SMTx Window Selection bits
11111 = Reserved
•
•
•
10011 = Reserved
10010 = RTCC_Seconds
10001 = CLC4OUT
10000 = CLC3OUT
01111 = CLC2OUT
01110 = CLC1OUT
01101 = ZCDOUT
01100 = C2OUT
01011 = C1OUT
01010 = PWM4_out
01001 = PWM3_out
01000 = CCP1OUT
00111 = CCP1OUT
00110 = TMR4_postscaler
00101 = TMR2_postscaler
00100 = TMR0_overflow
00011 = SOSC
00010 = MFINTOSC/16 (31.25 kHz)
00001 = LFINTOSC (31 kHz)
00000 = SMTWINx pin

REGISTER 28-6: SMTxSIG: SMTx SIGNAL INPUT SELECT REGISTER

U-0	U-0	U-0	R/W-0/0	R/W-0/0	R/W-0/0	R/W-0/0	R/W-0/0
—	—	—	SSEL<4:0>				
bit 7							bit 0

Legend:		
R = Readable bit	W = Writable bit	U = Unimplemented bit, read as ‘0’
u = Bit is unchanged	x = Bit is unknown	-n/n = Value at POR and BOR/Value at all other Resets
‘1’ = Bit is set	‘0’ = Bit is cleared	q = Value depends on condition

bit 7-5 **Unimplemented**: Read as ‘0’

bit 4-0 **SSEL<4:0>:** SMTx Signal Selection bits
11111 = Reserved
•
•
•
10001 = Reserved
10000 = RTCC_Seconds
01111 = CLC4OUT
01110 = CLC3OUT
01101 = CLC2OUT
01100 = CLC1OUT
01011 = ZCDOUT
01010 = C2OUT
01001 = C1OUT
01000 = PWM4_out
00111 = PWM3_out
00110 = CCP2OUT
00101 = CCP1OUT
00100 = TMR4_postscaler
00011 = TMR2_postscaler
00010 = TMR1_overflow
00001 = TMR0_overflow
00000 = SMTSIG pin

REGISTER 28-7: SMTxTMRL: SMT TIMER REGISTER – LOW BYTE

R/W-0/0	R/W-0/0	R/W-0/0	R/W-0/0	R/W-0/0	R/W-0/0	R/W-0/0	R/W-0/0
SMTxTMR<7:0>							
bit 7							bit 0

Legend:		
R = Readable bit	W = Writable bit	U = Unimplemented bit, read as ‘0’
u = Bit is unchanged	x = Bit is unknown	-n/n = Value at POR and BOR/Value at all other Resets
‘1’ = Bit is set	‘0’ = Bit is cleared	

bit 7-0 **SMTxTMR<7:0>**: Significant bits of the SMT Counter – Low Byte

REGISTER 28-8: SMTxTMRH: SMT TIMER REGISTER – HIGH BYTE

R/W-0/0	R/W-0/0	R/W-0/0	R/W-0/0	R/W-0/0	R/W-0/0	R/W-0/0	R/W-0/0
SMTxTMR<15:8>							
bit 7							bit 0

Legend:		
R = Readable bit	W = Writable bit	U = Unimplemented bit, read as ‘0’
u = Bit is unchanged	x = Bit is unknown	-n/n = Value at POR and BOR/Value at all other Resets
‘1’ = Bit is set	‘0’ = Bit is cleared	

bit 7-0 **SMTxTMR<15:8>**: Significant bits of the SMT Counter – High Byte

REGISTER 28-9: SMTxTMRU: SMT TIMER REGISTER – UPPER BYTE

R/W-0/0	R/W-0/0	R/W-0/0	R/W-0/0	R/W-0/0	R/W-0/0	R/W-0/0	R/W-0/0
SMTxTMR<23:16>							
bit 7							bit 0

Legend:		
R = Readable bit	W = Writable bit	U = Unimplemented bit, read as ‘0’
u = Bit is unchanged	x = Bit is unknown	-n/n = Value at POR and BOR/Value at all other Resets
‘1’ = Bit is set	‘0’ = Bit is cleared	

bit 7-0 **SMTxTMR<23:16>**: Significant bits of the SMT Counter – Upper Byte

REGISTER 28-10: SMTxCPRL: SMT CAPTURED PERIOD REGISTER – LOW BYTE

R-x/x	R-x/x	R-x/x	R-x/x	R-x/x	R-x/x	R-x/x	R-x/x
SMTxCPR<7:0>							
bit 7							bit 0

Legend:		
R = Readable bit	W = Writable bit	U = Unimplemented bit, read as ‘0’
u = Bit is unchanged	x = Bit is unknown	-n/n = Value at POR and BOR/Value at all other Resets
‘1’ = Bit is set	‘0’ = Bit is cleared	

bit 7-0 **SMTxCPR<7:0>**: Significant bits of the SMT Period Latch – Low Byte

REGISTER 28-11: SMTxCPRH: SMT CAPTURED PERIOD REGISTER – HIGH BYTE

R-x/x	R-x/x	R-x/x	R-x/x	R-x/x	R-x/x	R-x/x	R-x/x
SMTxCPR<15:8>							
bit 7							bit 0

Legend:		
R = Readable bit	W = Writable bit	U = Unimplemented bit, read as ‘0’
u = Bit is unchanged	x = Bit is unknown	-n/n = Value at POR and BOR/Value at all other Resets
‘1’ = Bit is set	‘0’ = Bit is cleared	

bit 7-0 **SMTxCPR<15:8>**: Significant bits of the SMT Period Latch – High Byte

REGISTER 28-12: SMTxCPRU: SMT CAPTURED PERIOD REGISTER – UPPER BYTE

R-x/x	R-x/x	R-x/x	R-x/x	R-x/x	R-x/x	R-x/x	R-x/x
SMTxCPR<23:16>							
bit 7							bit 0

Legend:		
R = Readable bit	W = Writable bit	U = Unimplemented bit, read as ‘0’
u = Bit is unchanged	x = Bit is unknown	-n/n = Value at POR and BOR/Value at all other Resets
‘1’ = Bit is set	‘0’ = Bit is cleared	

bit 7-0 **SMTxCPR<23:16>**: Significant bits of the SMT Period Latch – Upper Byte

REGISTER 28-13: SMTxCPWL: SMT CAPTURED PULSE WIDTH REGISTER – LOW BYTE

R-x/x	R-x/x	R-x/x	R-x/x	R-x/x	R-x/x	R-x/x	R-x/x
SMTxCPW<7:0>							
bit 7							bit 0

Legend:		
R = Readable bit	W = Writable bit	U = Unimplemented bit, read as ‘0’
u = Bit is unchanged	x = Bit is unknown	-n/n = Value at POR and BOR/Value at all other Resets
‘1’ = Bit is set	‘0’ = Bit is cleared	

bit 7-0 **SMTxCPW<7:0>**: Significant bits of the SMT PW Latch – Low Byte

REGISTER 28-14: SMTxCPWH: SMT CAPTURED PULSE WIDTH REGISTER – HIGH BYTE

R-x/x	R-x/x	R-x/x	R-x/x	R-x/x	R-x/x	R-x/x	R-x/x
SMTxCPW<15:8>							
bit 7							bit 0

Legend:		
R = Readable bit	W = Writable bit	U = Unimplemented bit, read as ‘0’
u = Bit is unchanged	x = Bit is unknown	-n/n = Value at POR and BOR/Value at all other Resets
‘1’ = Bit is set	‘0’ = Bit is cleared	

bit 7-0 **SMTxCPW<15:8>**: Significant bits of the SMT PW Latch – High Byte

REGISTER 28-15: SMTxCPWU: SMT CAPTURED PULSE WIDTH REGISTER – UPPER BYTE

R-x/x	R-x/x	R-x/x	R-x/x	R-x/x	R-x/x	R-x/x	R-x/x
SMTxCPW<23:16>							
bit 7							bit 0

Legend:		
R = Readable bit	W = Writable bit	U = Unimplemented bit, read as ‘0’
u = Bit is unchanged	x = Bit is unknown	-n/n = Value at POR and BOR/Value at all other Resets
‘1’ = Bit is set	‘0’ = Bit is cleared	

bit 7-0 **SMTxCPW<23:16>**: Significant bits of the SMT PW Latch – Upper Byte

REGISTER 28-16: SMTxPRL: SMT PERIOD REGISTER – LOW BYTE

R/W-x/1	R/W-x/1	R/W-x/1	R/W-x/1	R/W-x/1	R/W-x/1	R/W-x/1	R/W-x/1
SMTxPR<7:0>							
bit 7							bit 0

Legend:		
R = Readable bit	W = Writable bit	U = Unimplemented bit, read as ‘0’
u = Bit is unchanged	x = Bit is unknown	-n/n = Value at POR and BOR/Value at all other Resets
‘1’ = Bit is set	‘0’ = Bit is cleared	

bit 7-0 **SMTxPR<7:0>**: Significant bits of the SMT Timer Value for Period Match – Low Byte

REGISTER 28-17: SMTxPRH: SMT PERIOD REGISTER – HIGH BYTE

R/W-x/1	R/W-x/1	R/W-x/1	R/W-x/1	R/W-x/1	R/W-x/1	R/W-x/1	R/W-x/1
SMTxPR<15:8>							
bit 7							bit 0

Legend:		
R = Readable bit	W = Writable bit	U = Unimplemented bit, read as ‘0’
u = Bit is unchanged	x = Bit is unknown	-n/n = Value at POR and BOR/Value at all other Resets
‘1’ = Bit is set	‘0’ = Bit is cleared	

bit 7-0 **SMTxPR<15:8>**: Significant bits of the SMT Timer Value for Period Match – High Byte

REGISTER 28-18: SMTxPRU: SMT PERIOD REGISTER – UPPER BYTE

R/W-x/1	R/W-x/1	R/W-x/1	R/W-x/1	R/W-x/1	R/W-x/1	R/W-x/1	R/W-x/1
SMTxPR<23:16>							
bit 7							bit 0

Legend:		
R = Readable bit	W = Writable bit	U = Unimplemented bit, read as ‘0’
u = Bit is unchanged	x = Bit is unknown	-n/n = Value at POR and BOR/Value at all other Resets
‘1’ = Bit is set	‘0’ = Bit is cleared	

bit 7-0 **SMTxPR<23:16>**: Significant bits of the SMT Timer Value for Period Match – Upper Byte

28.2 SMT Operation

The core of the module is the 24-bit counter, SMTxTMR combined with a complex data acquisition front-end. Depending on the mode of operation selected, the SMT can perform a variety of measurements summarized in Table .

28.2.1 CLOCK SOURCES

Clock sources available to the SMT include:

- FOSC
- FOSC/4
- HFINTOSC
- MFINTOSC (500 kHz and 31.25 kHz)
- LFINTOSC
- SOSC

The SMT clock source is selected by configuring the CSEL<2:0> bits in the SMTxCLK register. The clock source can also be prescaled using the PS<1:0> bits of the SMTxCON0 register. The prescaled clock source is used to clock both the counter and any synchronization logic used by the module.

28.2.2 PERIOD MATCH INTERRUPT

Similar to other timers, the SMT triggers an interrupt when SMTxTMR rolls over to '0'. This happens when SMTxTMR = SMTxPR, regardless of mode. Hence, in any mode that relies on an external signal or a window to reset the timer, proper operation requires that SMTxPR be set to a period larger than that of the expected signal or window.

28.3 Basic Timer Function Registers

The SMTxTMR time base and the SMTxCPW/SMTxPR/SMTxCPR buffer registers serve several functions and can be manually updated using software.

28.3.1 TIME BASE

The SMTxTMR is the 24-bit counter that is the center of the SMT. It is used as the basic counter/timer for measurement in each of the modes of the SMT. It can be reset to a value of 24'h00_0000 by setting the RST bit of the SMTxSTAT register. It can be written to and read from software, but it is not guarded for atomic access, therefore reads and writes to the SMTxTMR should only be made when the GO = 0, or the software should have other measures to ensure integrity of SMTxTMR reads/writes.

28.3.2 PULSE-WIDTH LATCH REGISTERS

The SMTxCPW registers are the 24-bit SMT pulse width latch. They are used to latch in the value of the SMTxTMR when triggered by various signals, which are determined by the mode the SMT is currently in. The SMTxCPW registers can also be updated with the current value of the SMTxTMR value by setting the CPWUP bit of the SMTxSTAT register.

28.3.3 PERIOD LATCH REGISTERS

The SMTxCPR registers are the 24-bit SMT period latch. They are used to latch in values of the SMTxTMR when triggered by various other signals, which are determined by the mode the SMT is currently in.

The SMTxCPR registers can also be updated with the current value of the SMTxTMR value by setting the CPRUP bit in the SMTxSTAT register.

28.4 Halt Operation

The counter can be prevented from rolling-over using the STP bit in the SMTxCON0 register. When halting is enabled, the period match interrupt persists until the SMTxTMR is reset (either by a manual Reset, **Section 28.3.1 "Time Base"**) or by clearing the SMTxGO bit of the SMTxCON1 register and writing the SMTxTMR values in software.

28.5 Polarity Control

The three input signals for the SMT have polarity control to determine whether or not they are active high/positive edge or active low/negative edge signals.

The following bits apply to Polarity Control:

- WSEL bit (Window Polarity)
- SSEL bit (Signal Polarity)
- CSEL bit (Clock Polarity)

These bits are located in the SMTxCON0 register.

28.6 Status Information

The SMT provides input status information for the user without requiring the need to deal with the polarity of the incoming signals.

28.6.1 WINDOW STATUS

Window status is determined by the WS bit of the SMTxSTAT register. This bit is only used in Windowed Measure, Gated Counter and Gated Window Measure modes, and is only valid when TS = 1, and will be delayed in time by synchronizer delays in non-Counter modes.

28.6.2 SIGNAL STATUS

Signal status is determined by the AS bit of the SMTxSTAT register. This bit is used in all modes except Window Measure, Time of Flight and Capture modes, and is only valid when TS = 1, and will be delayed in time by synchronizer delays in non-Counter modes.

28.6.3 GO STATUS

Timer run status is determined by the TS bit of the SMTxSTAT register, and will be delayed in time by synchronizer delays in non-Counter modes.

28.7 Modes of Operation

The modes of operation are summarized in Table 28-2. The following sections provide detailed descriptions, examples of how the modes can be used. Note that all waveforms assume WPOL/SPOL/CPOL = 0. When WPOL/SPOL/CPOL = 1, all SMTSIGx, SMTWINx and SMT clock signals will have a polarity opposite to that indicated. For all modes, the REPEAT bit controls whether the acquisition is repeated or single. When REPEAT = 0 (Single Acquisition mode), the timer will stop incrementing and the SMTxGO bit will be reset upon the completion of an acquisition. Otherwise, the timer will continue and allow for continued acquisitions to overwrite the previous ones until the timer is stopped in software.

28.7.1 TIMER MODE

Timer mode is the simplest mode of operation where the SMTxTMR is used as a 16/24-bit timer. No data acquisition takes place in this mode. The timer increments as long as the SMTxGO bit has been set by software. No SMT window or SMT signal events affect the SMTxGO bit. Everything is synchronized to the SMT clock source. When the timer experiences a period match (SMTxTMR = SMTxPR), SMTxTMR is reset and the period match interrupt trips. See Figure 28-3.

TABLE 28-2: MODES OF OPERATION

MODE	Mode of Operation	Synchronous Operation	Reference
0000	Timer	Yes	**Section 28.7.1 “Timer Mode”**
0001	Gated Timer	Yes	**Section 28.7.2 “Gated Timer Mode”**
0010	Period and Duty Cycle Acquisition	Yes	**Section 28.7.3 “Period and Duty-Cycle Mode”**
0011	High and Low Time Measurement	Yes	**Section 28.7.4 “High and Low-Measure Mode”**
0100	Windowed Measurement	Yes	**Section 28.7.5 “Windowed Measure Mode”**
0101	Gated Windowed Measurement	Yes	**Section 28.7.6 “Gated Window Measure Mode”**
0110	Time of Flight	Yes	**Section 28.7.7 “Time of Flight Measure Mode”**
0111	Capture	Yes	**Section 28.7.8 “Capture Mode”**
1000	Counter	No	**Section 28.7.9 “Counter Mode”**
1001	Gated Counter	No	**Section 28.7.10 “Gated Counter Mode”**
1010	Windowed Counter	No	**Section 28.7.11 “Windowed Counter Mode”**
1011-1111	Reserved	—	—

FIGURE 28-3: TIMER MODE TIMING DIAGRAM

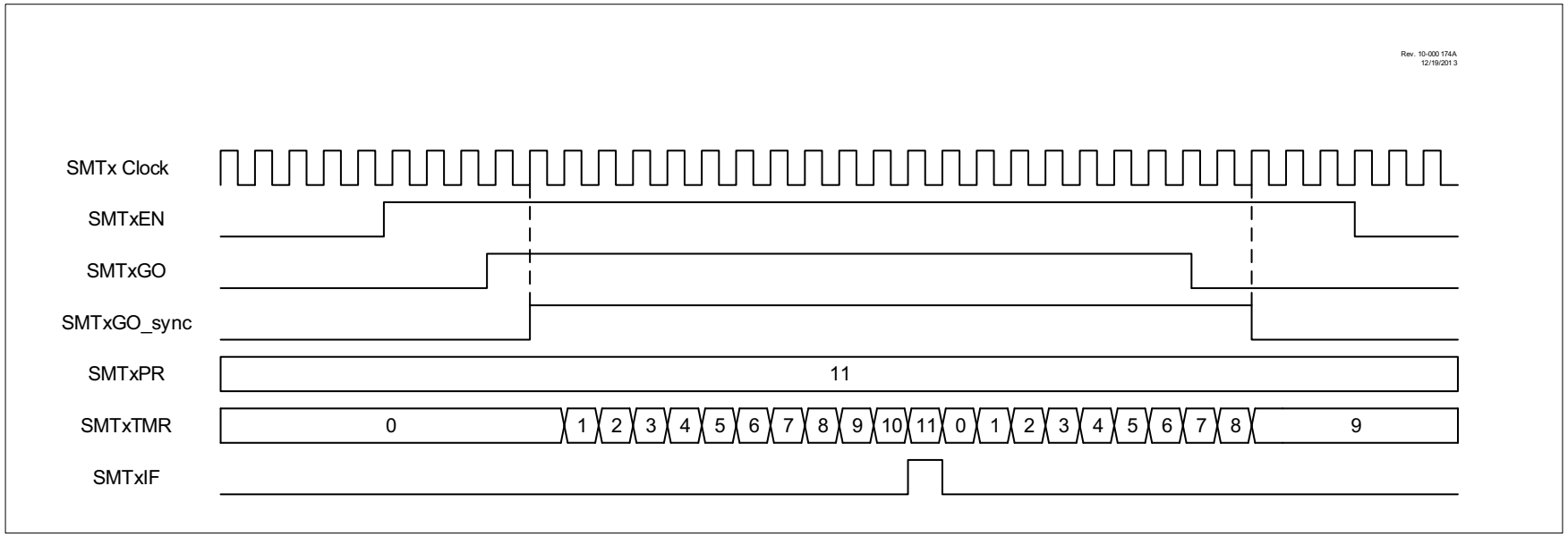

© 2017-2019 Microchip Technology Inc.

28.7.2 GATED TIMER MODE

Gated Timer mode uses the SMTSIGx input to control whether or not the SMTxTMR will increment. Upon a falling edge of the external signal, the SMTxCPW register will update to the current value of the SMTxTMR. Example waveforms for both repeated and single acquisitions are provided in Figure 28-4 and Figure 28-5.

FIGURE 28-4: GATED TIMER MODE REPEAT ACQUISITION TIMING DIAGRAM

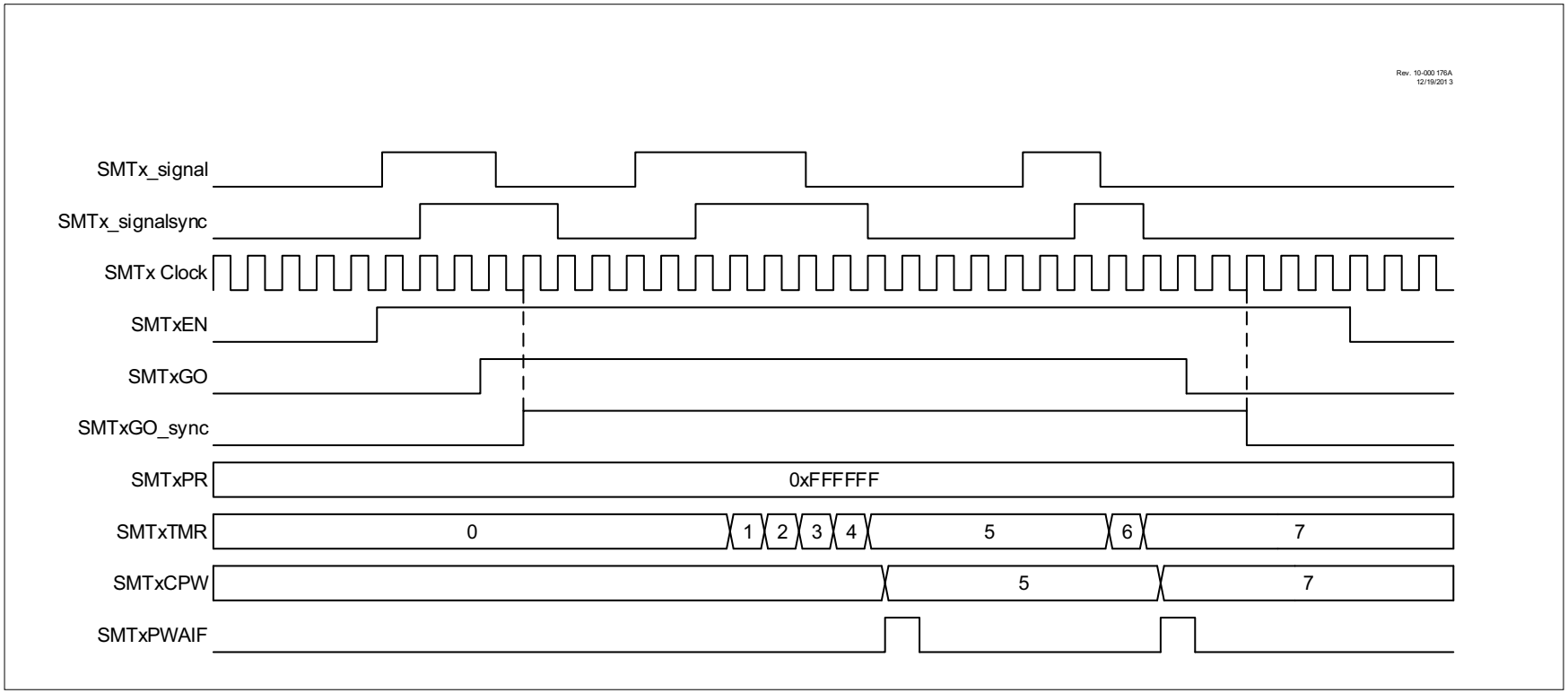

© 2017-2019 Microchip Technology Inc.

FIGURE 28-5: GATED TIMER MODE SINGLE ACQUISITION TIMING DIAGRAM

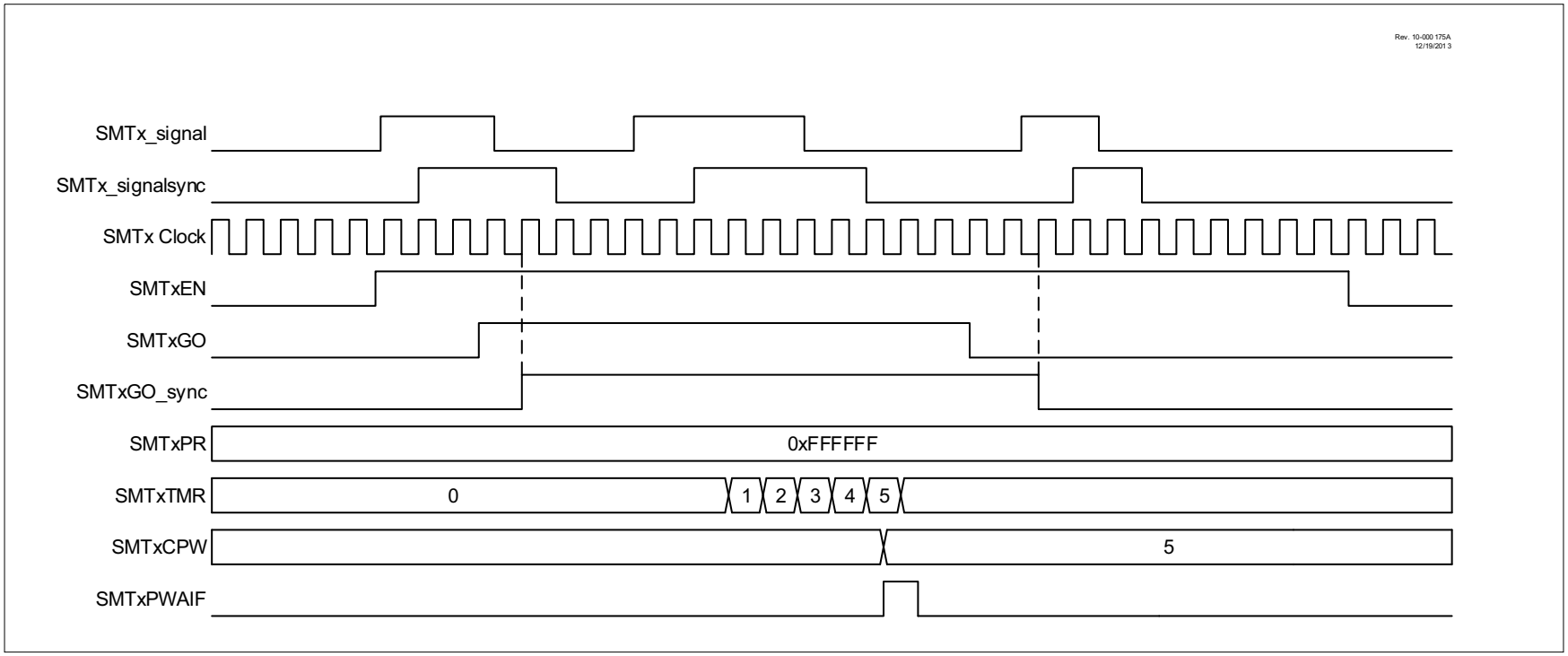

© 2017-2019 Microchip Technology Inc.

28.7.3 PERIOD AND DUTY-CYCLE MODE

In Duty-Cycle mode, either the duty cycle or period (depending on polarity) of the SMTx_signal can be acquired relative to the SMT clock. The CPW register is updated on a falling edge of the signal, and the CPR register is updated on a rising edge of the signal, along with the SMTxTMR resetting to `0x0001`. In addition, the SMTxGO bit is reset on a rising edge when the SMT is in Single Acquisition mode. See Figure 28-6 and Figure 28-7.

FIGURE 28-6: PERIOD AND DUTY-CYCLE REPEAT ACQUISITION MODE TIMING DIAGRAM

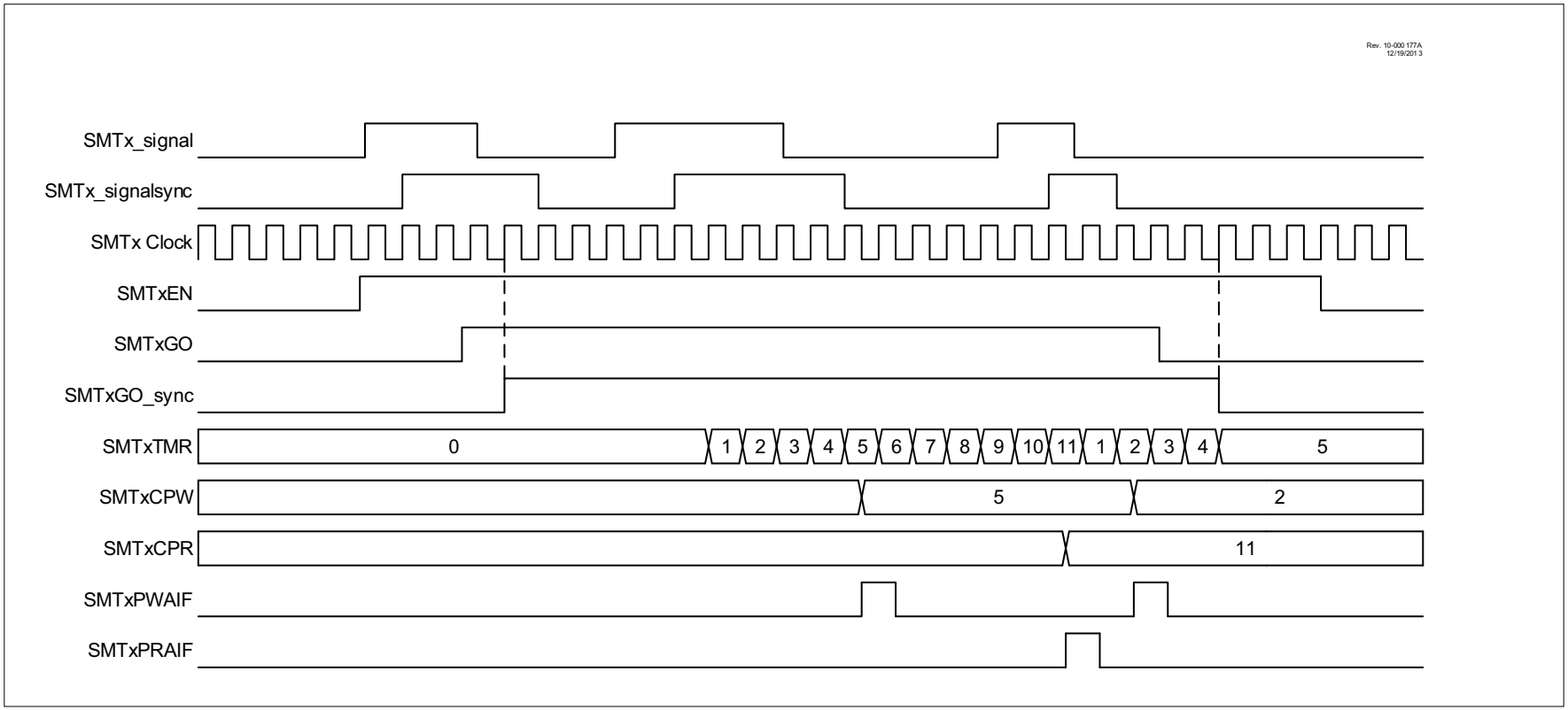

© 2017-2019 Microchip Technology Inc.

FIGURE 28-7: PERIOD AND DUTY-CYCLE SINGLE ACQUISITION TIMING DIAGRAM

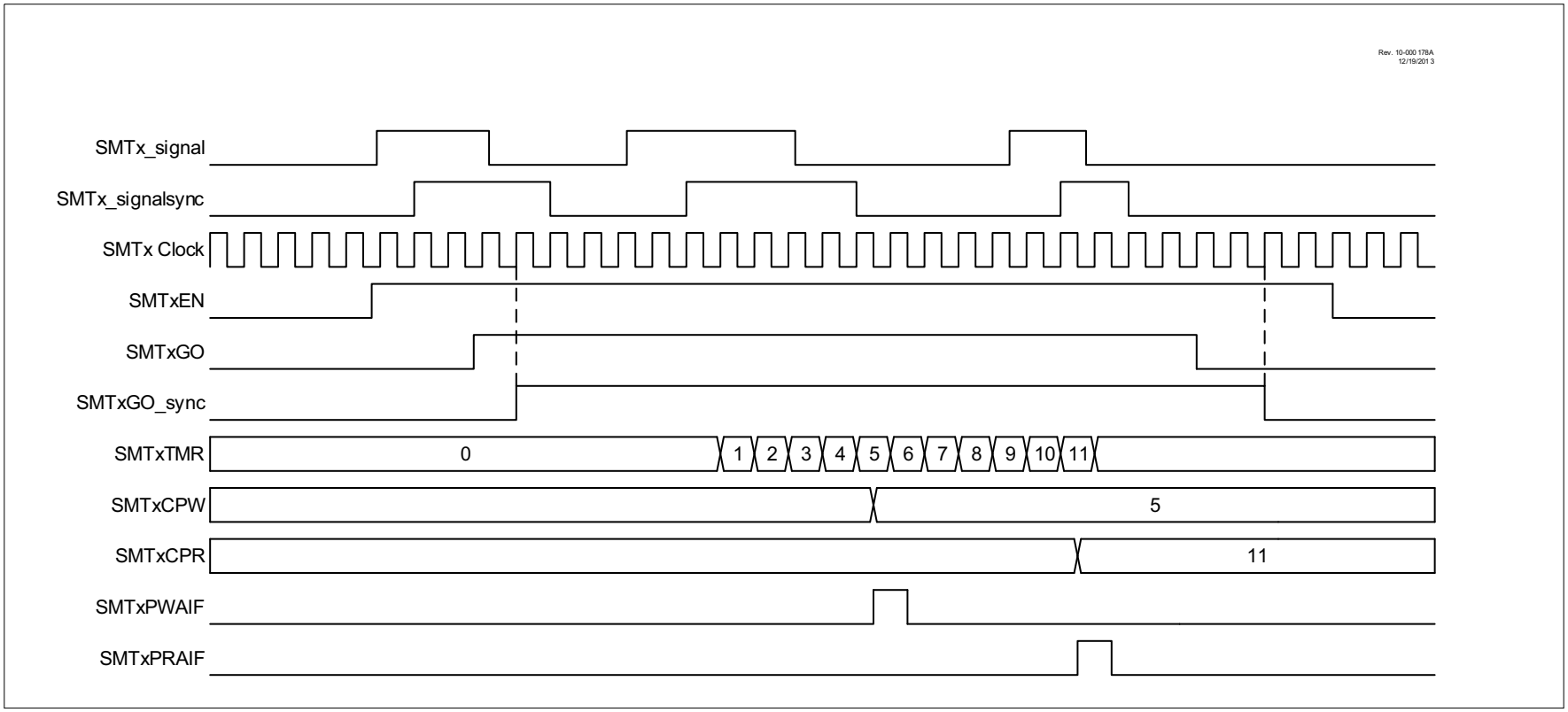

© 2017-2019 Microchip Technology Inc.

28.7.4 HIGH AND LOW-MEASURE MODE

This mode measures the high and low-pulse time of the SMTSIGx relative to the SMT clock. It begins incrementing the SMTxTMR on a rising edge on the SMTSIGx input, then updates the SMTxCPW register with the value and resets the SMTxTMR on a falling edge, starting to increment again. Upon observing another rising edge, it updates the SMTxCPR register with its current value and once again resets the SMTxTMR value and begins incrementing again. See Figure 28-8 and Figure 28-9.

FIGURE 28-8: HIGH AND LOW-MEASURE MODE REPEAT ACQUISITION TIMING DIAGRAM

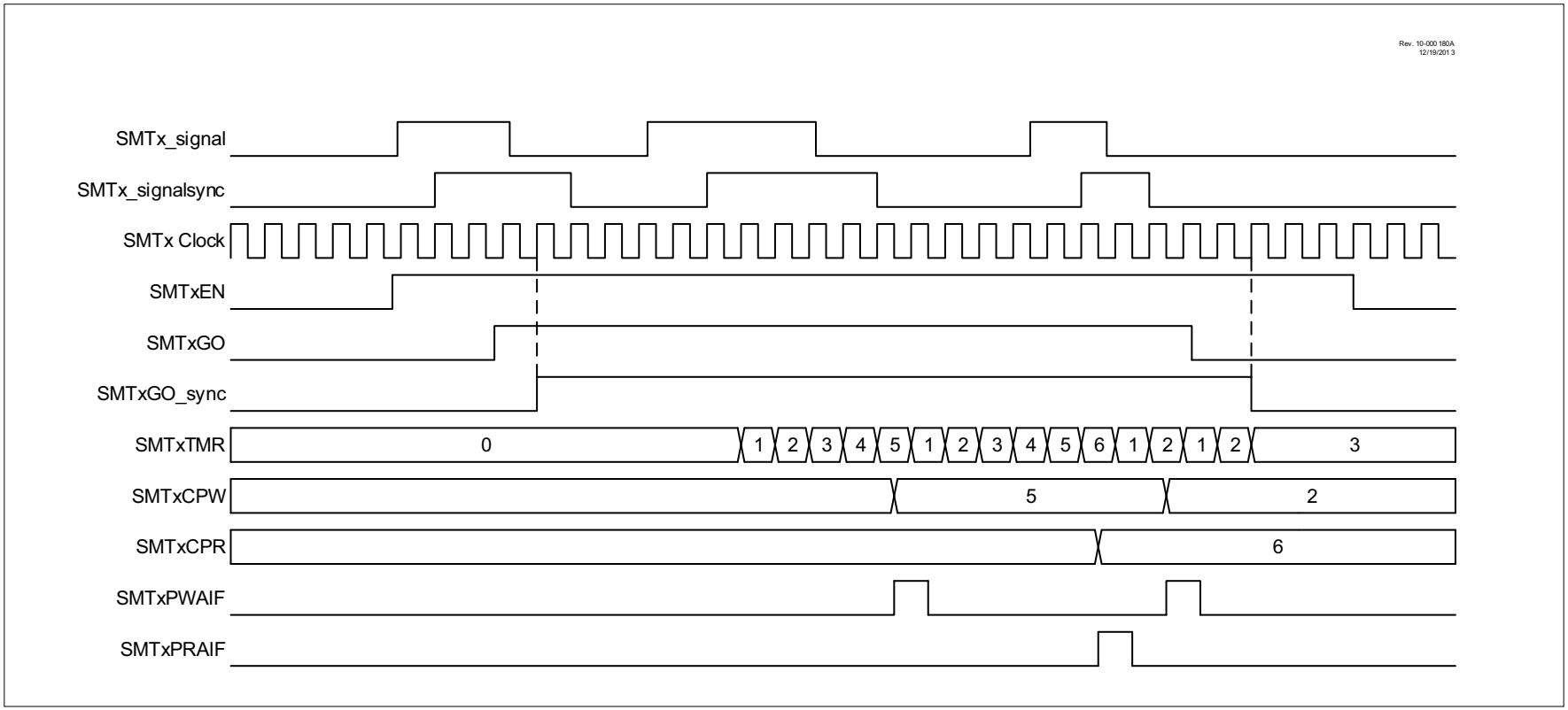

© 2017-2019 Microchip Technology Inc.

FIGURE 28-9: HIGH AND LOW-MEASURE MODE SINGLE ACQUISITION TIMING DIAGRAM

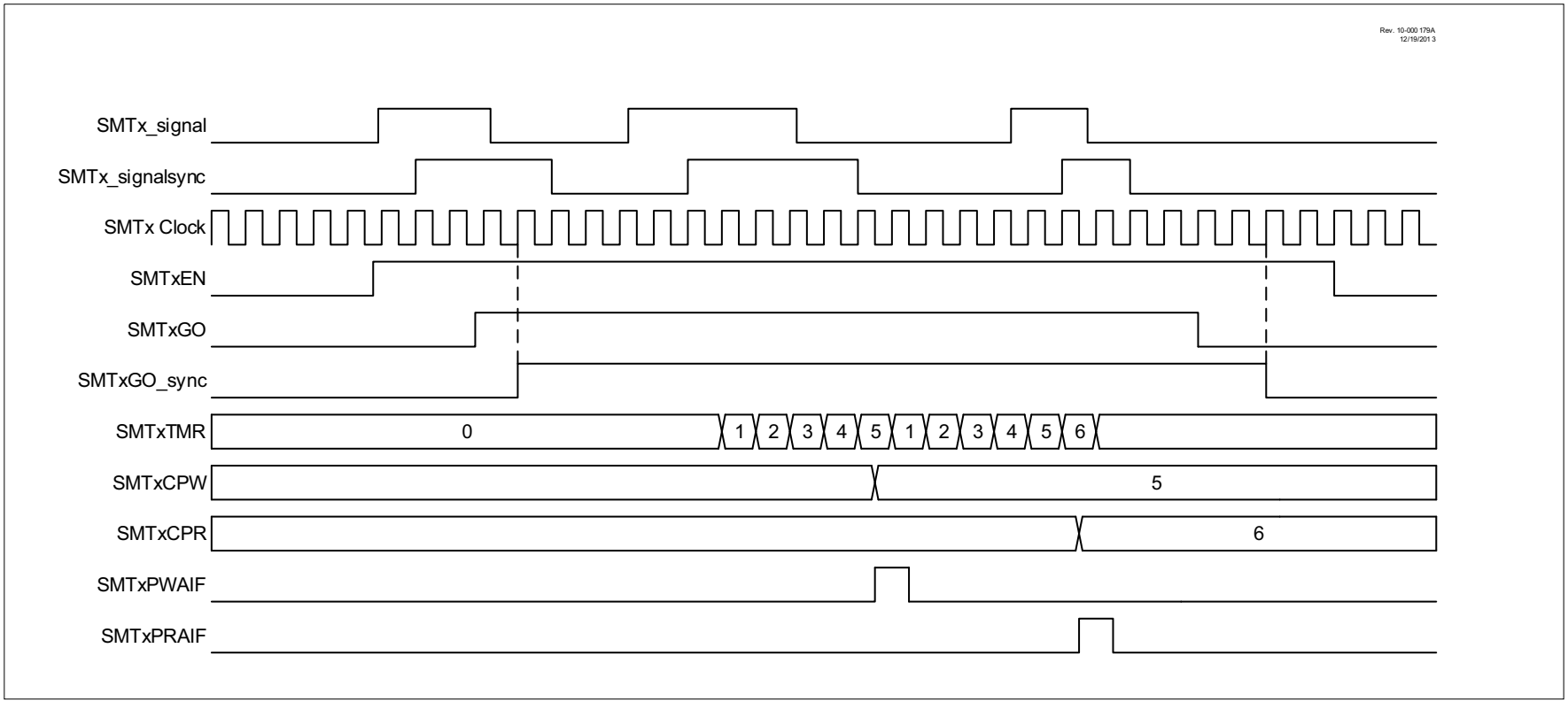

© 2017-2019 Microchip Technology Inc.

28.7.5 WINDOWED MEASURE MODE

Windowed Measure mode measures the window duration of the SMTWINx input of the SMT. It begins incrementing the timer on a rising edge of the SMTWINx input and updates the SMTxCPR register with the value of the timer and resets the timer on a second rising edge. See Figure 28-10 and Figure 28-11.

FIGURE 28-10: WINDOWED MEASURE MODE REPEAT ACQUISITION TIMING DIAGRAM

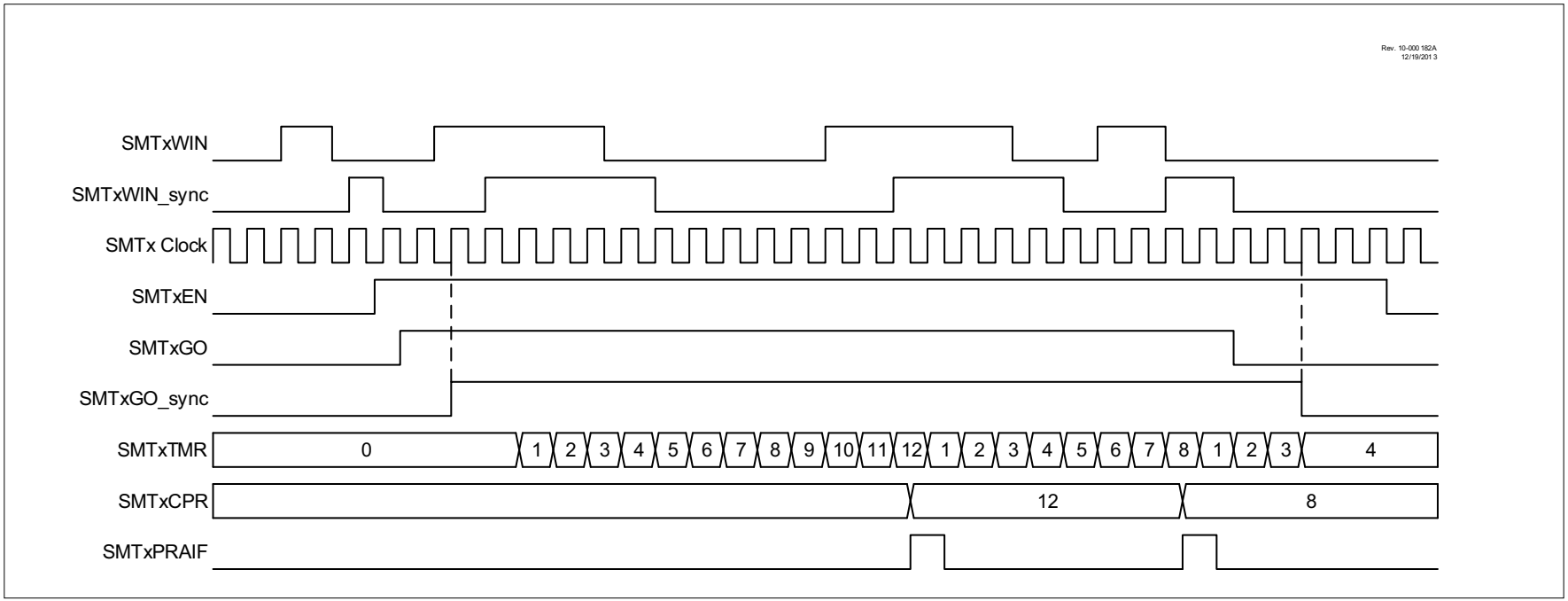

© 2017-2019 Microchip Technology Inc.

FIGURE 28-11: WINDOWED MEASURE MODE SINGLE ACQUISITION TIMING DIAGRAM

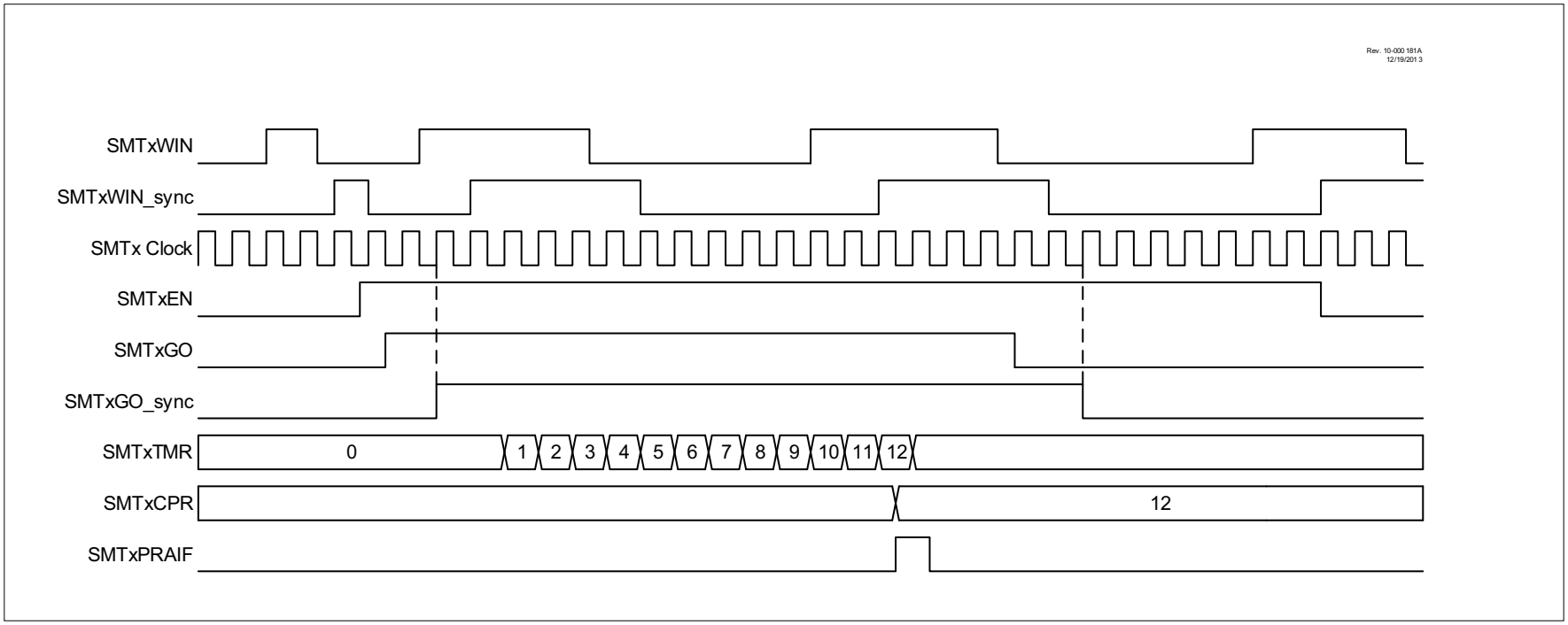

© 2017-2019 Microchip Technology Inc.

28.7.6 GATED WINDOW MEASURE MODE

Gated Window Measure mode measures the duty cycle of the SMTx_signal input over a known input window. It does so by incrementing the timer on each pulse of the clock signal while the SMTx_signal input is high, updating the SMTxCPR register and resetting the timer on every rising edge of the SMTWINx input after the first. See Figure 28-12 and Figure 28-13.

FIGURE 28-12: GATED WINDOWED MEASURE MODE REPEAT ACQUISITION TIMING DIAGRAM

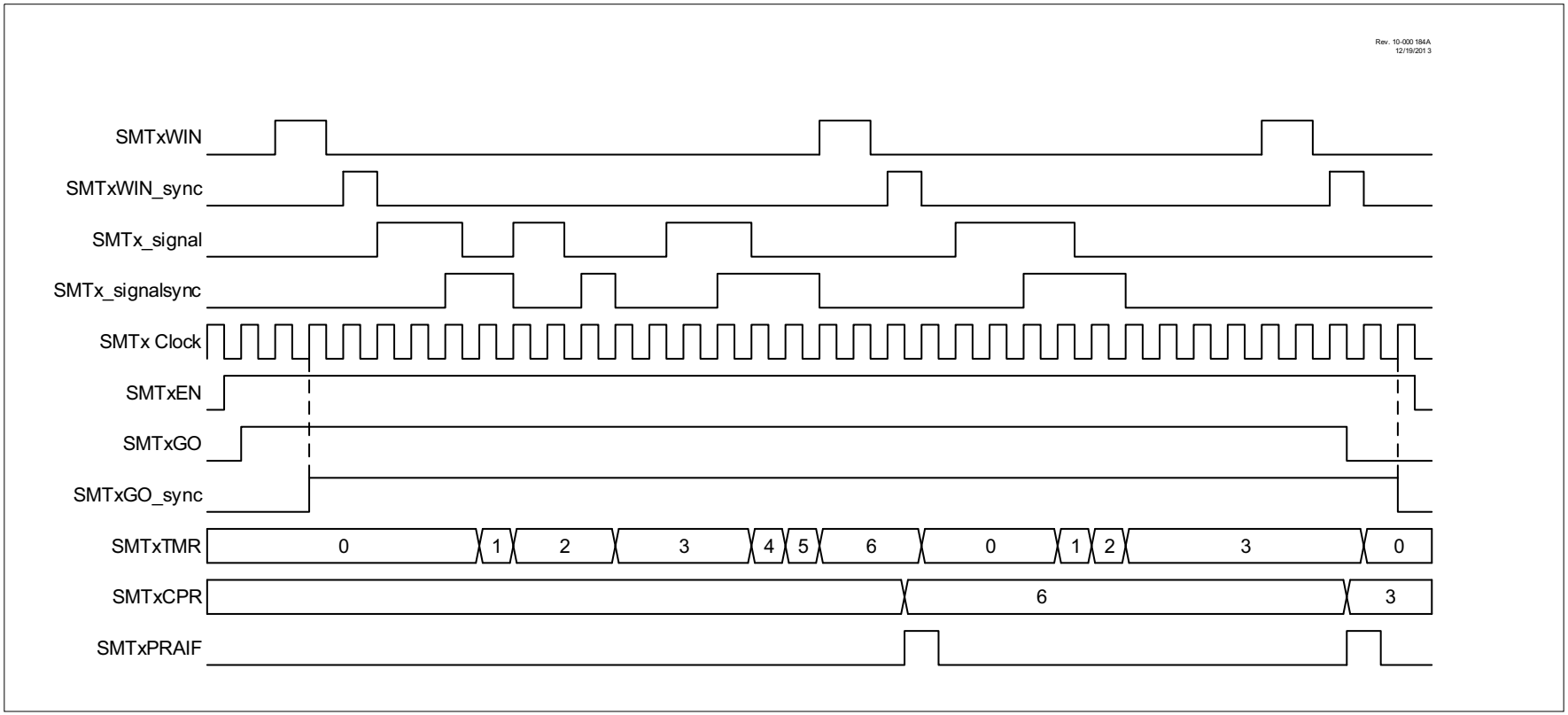

© 2017-2019 Microchip Technology Inc.

FIGURE 28-13: GATED WINDOWED MEASURE MODE SINGLE ACQUISITION TIMING DIAGRAMS

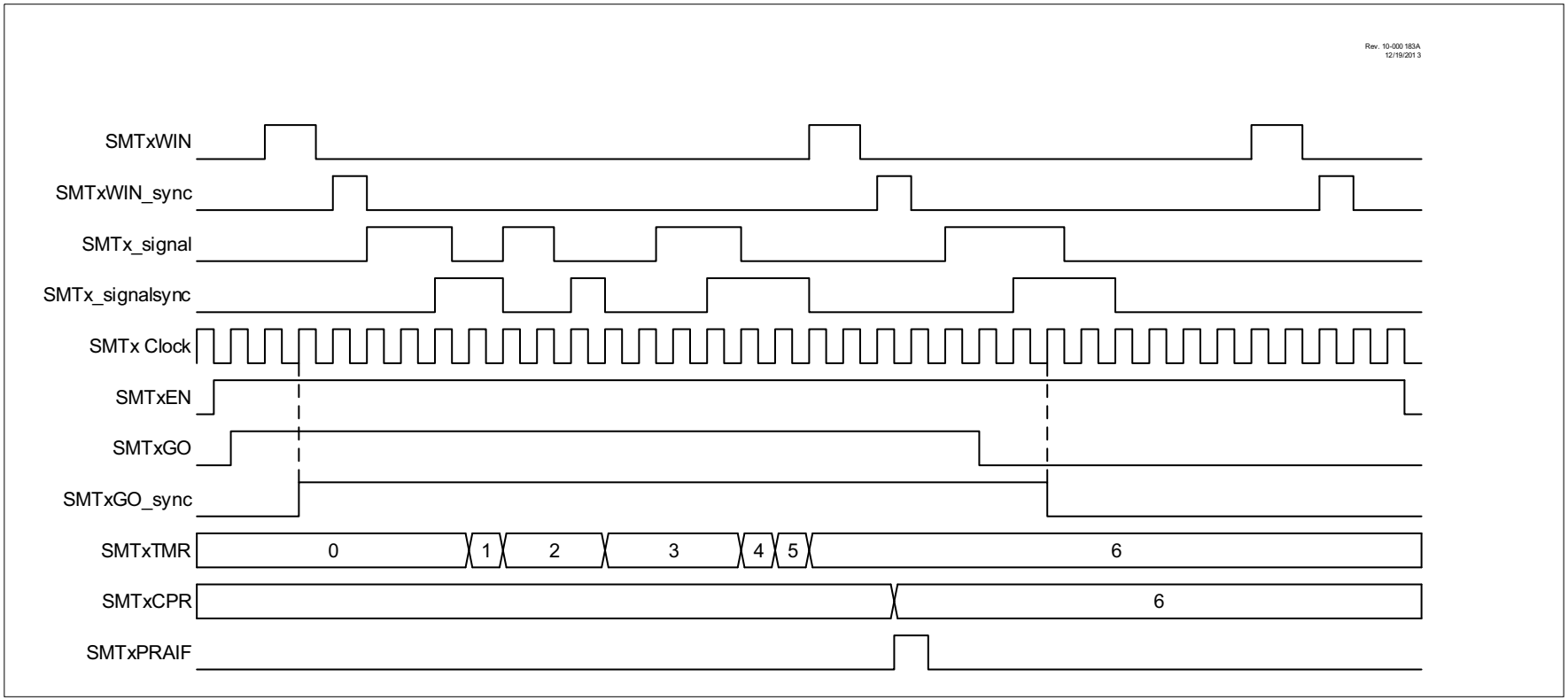

© 2017-2019 Microchip Technology Inc.

28.7.7 TIME OF FLIGHT MEASURE MODE

Time of Flight Measure mode measures the time interval between a rising edge on the SMTWINx input and a rising edge on the SMTx_signal input, beginning to increment the timer upon observing a rising edge on the SMTWINx input, while updating the SMTxCPR register and resetting the timer upon observing a rising edge on the SMTx_signal input. In the event of two SMTWINx rising edges without an SMTx_signal rising edge, it will update the SMTxCPW register with the current value of the timer and reset the timer value. See Figure 28-14 and Figure 28-15.

FIGURE 28-14: TIME OF FLIGHT MODE REPEAT ACQUISITION TIMING DIAGRAM

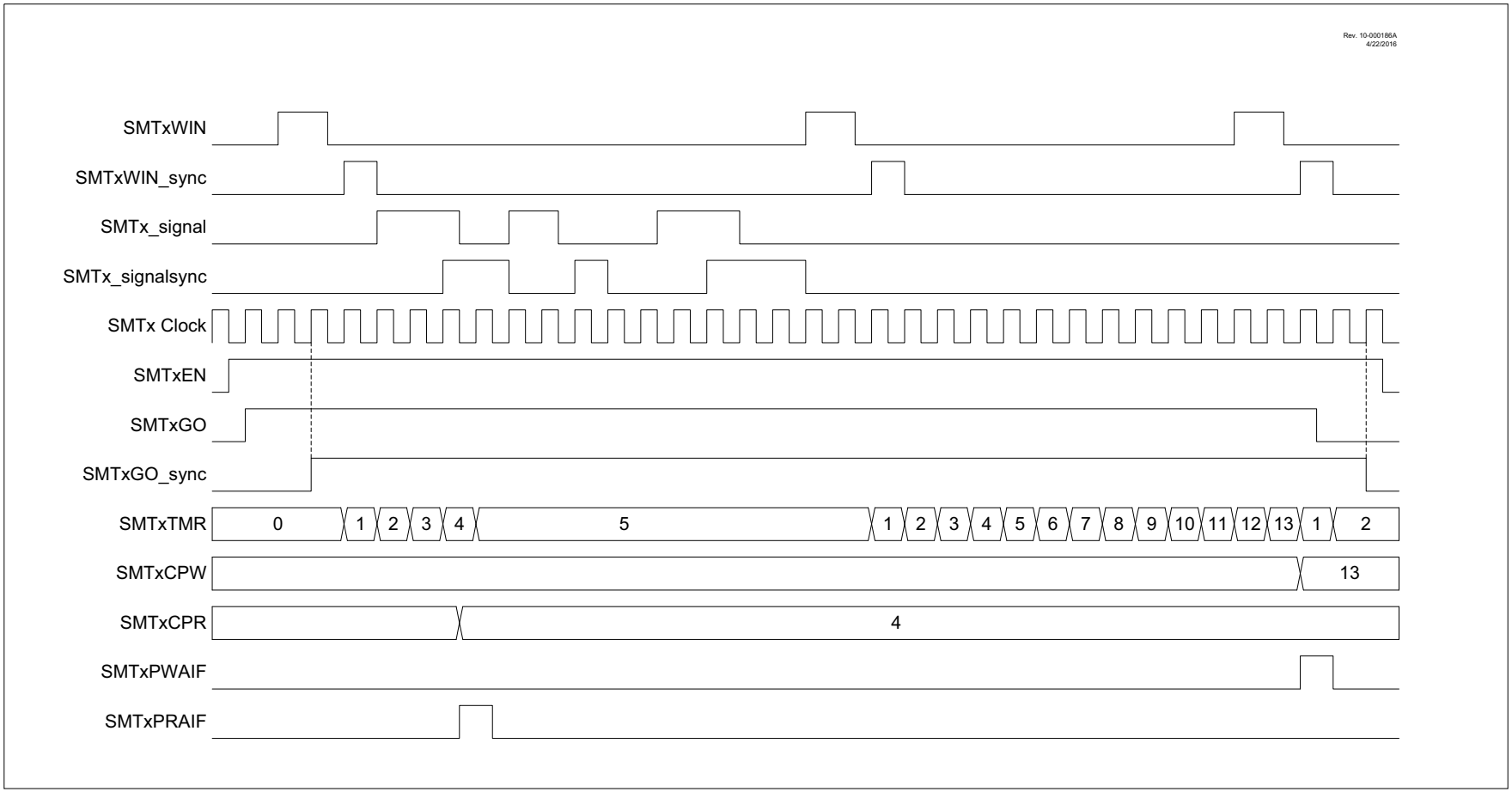

© 2017-2019 Microchip Technology Inc.

FIGURE 28-15: TIME OF FLIGHT MODE SINGLE ACQUISITION TIMING DIAGRAM

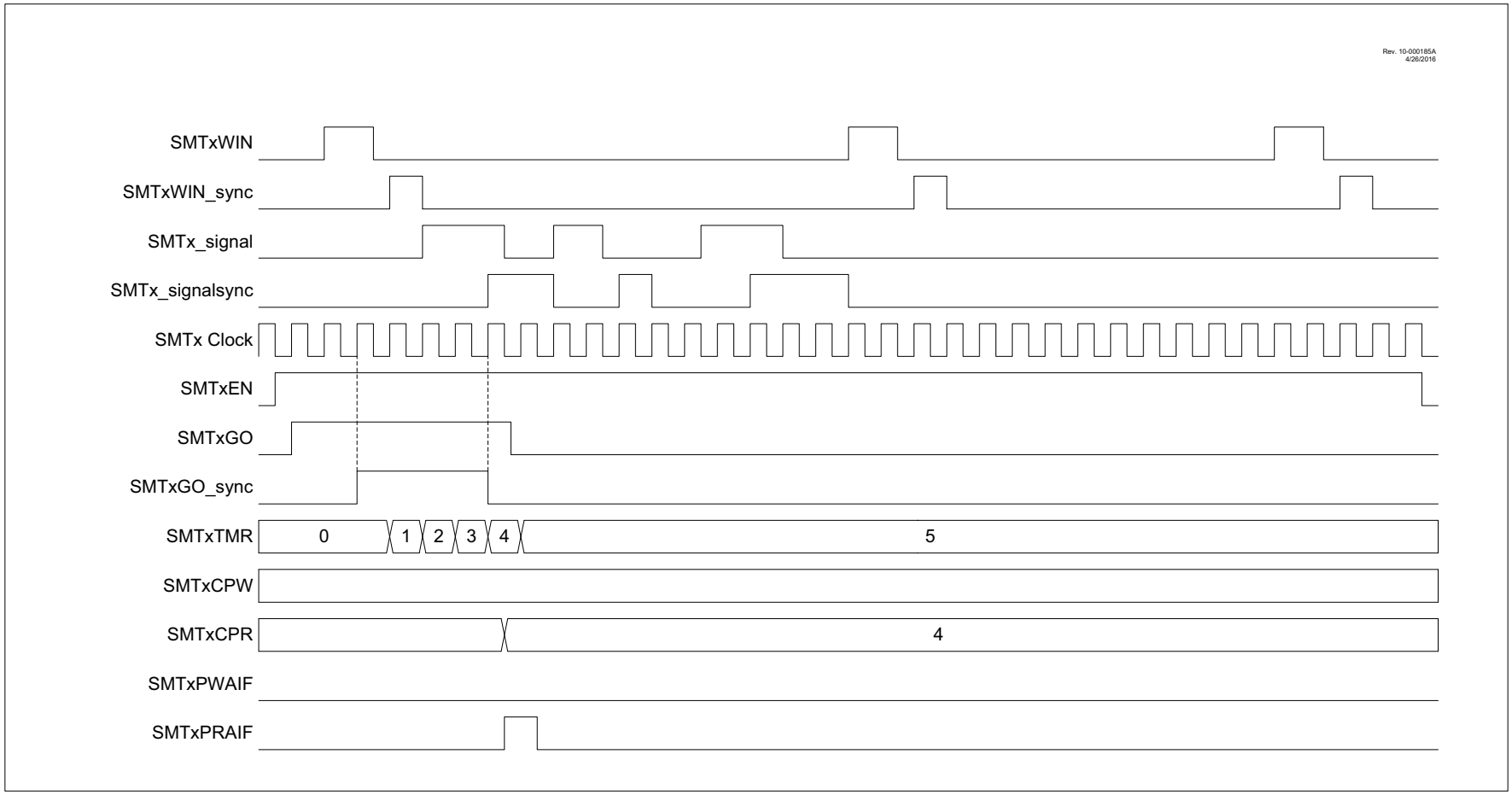

© 2017-2019 Microchip Technology Inc.

28.7.8 CAPTURE MODE

Capture mode captures the Timer value based on a rising or falling edge on the SMTWINx input and triggers an interrupt. This mimics the capture feature of a CCP module. The timer begins incrementing upon the SMTxGO bit being set, and updates the value of the SMTxCPR register on each rising edge of SMTWINx, and updates the value of the CPW register on each falling edge of the SMTWINx. The timer is not reset by any hardware conditions in this mode and must be reset by software, if desired. See Figure 28-16 and Figure 28-17.

FIGURE 28-16: CAPTURE MODE REPEAT ACQUISITION TIMING DIAGRAM

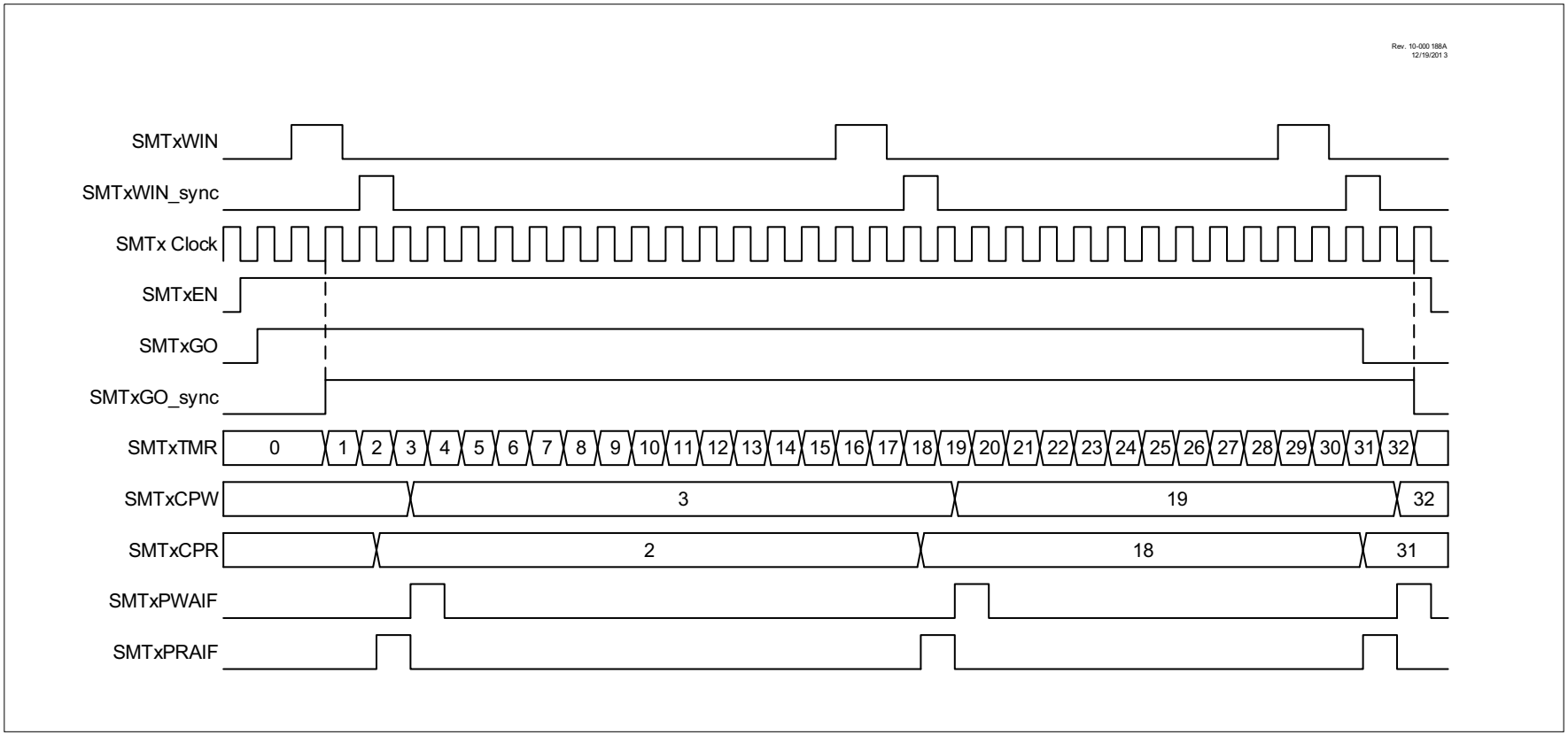

© 2017-2019 Microchip Technology Inc.

FIGURE 28-17: CAPTURE MODE SINGLE ACQUISITION TIMING DIAGRAM

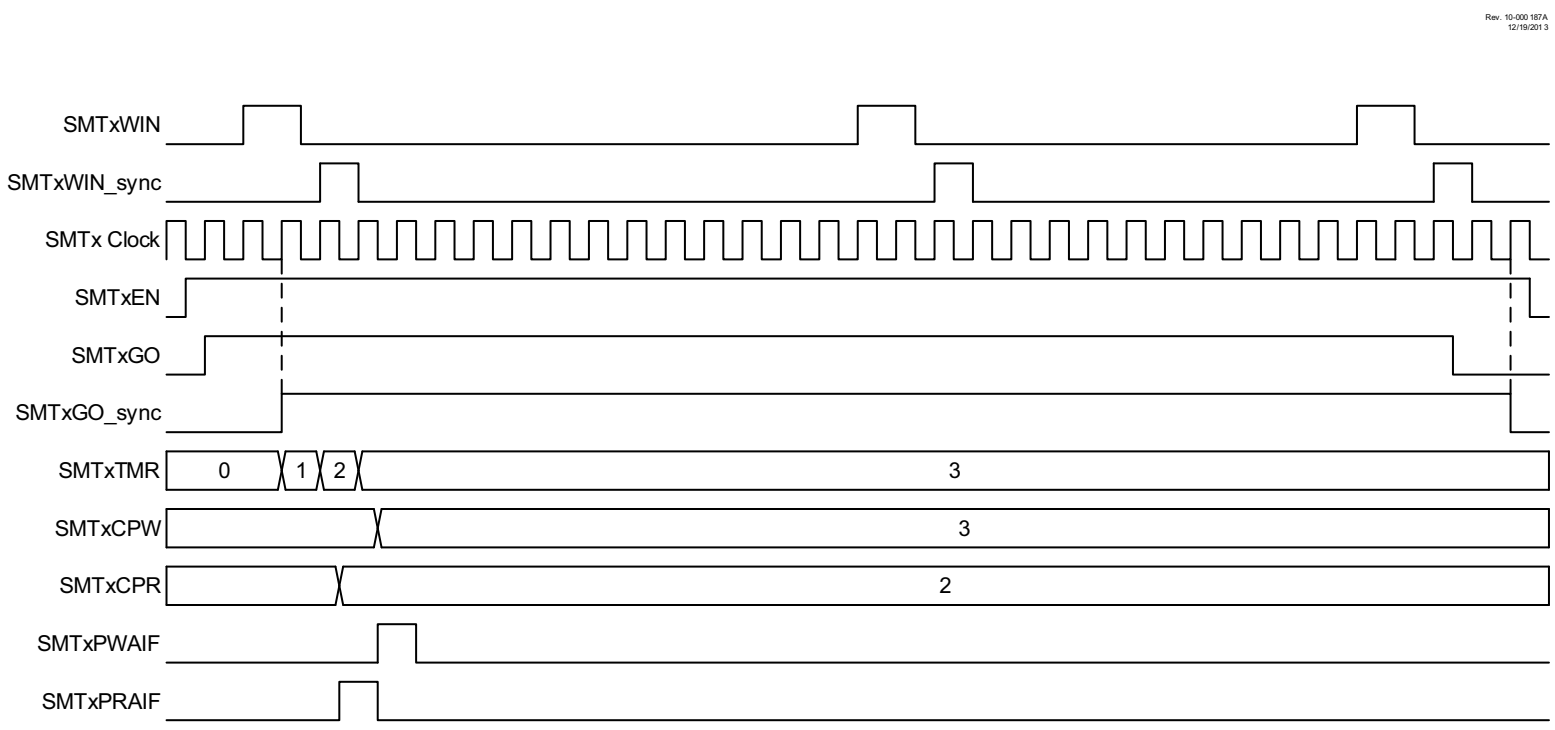

© 2017-2019 Microchip Technology Inc.

28.7.9 COUNTER MODE

Counter mode increments the timer on each pulse of the SMTx_signal input. This mode is asynchronous to the SMT clock and uses the SMTx_signal as a time source. The SMTxCPW register will be updated with the current SMTxTMR value on the rising edge of the SMTxWIN input. See Figure 28-18.

FIGURE 28-18: COUNTER MODE TIMING DIAGRAM

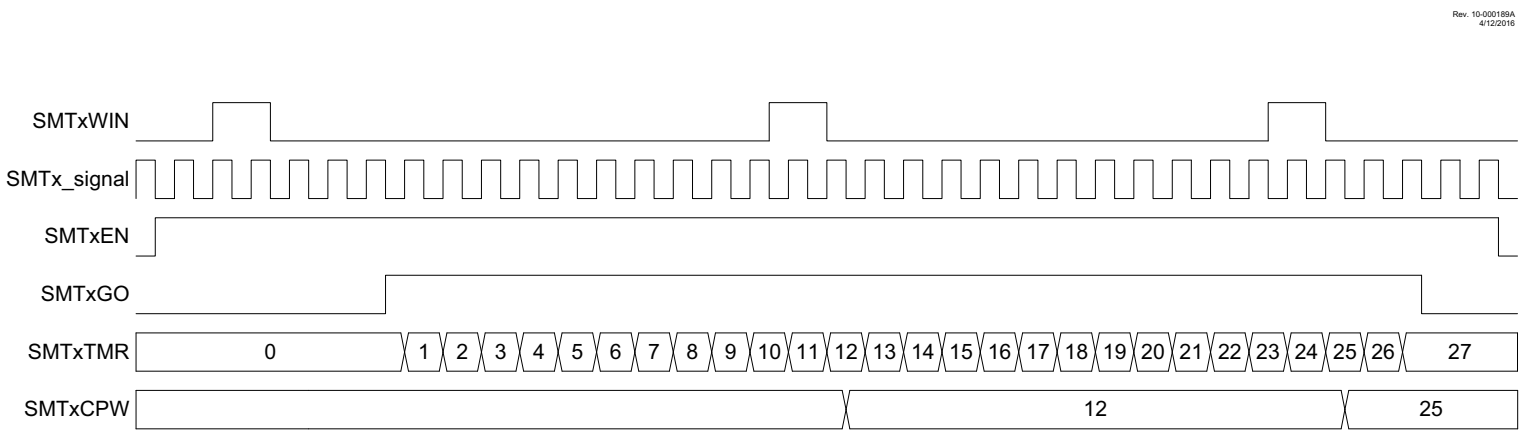

© 2017-2019 Microchip Technology Inc.

28.7.10 GATED COUNTER MODE

Gated Counter mode counts pulses on the SMTx_signal input, gated by the SMTxWIN input. It begins incrementing the timer upon seeing a rising edge of the SMTxWIN input and updates the SMTxCPW register upon a falling edge on the SMTxWIN input. See Figure 28-19 and Figure 28-20.

FIGURE 28-19: GATED COUNTER MODE REPEAT ACQUISITION TIMING DIAGRAM

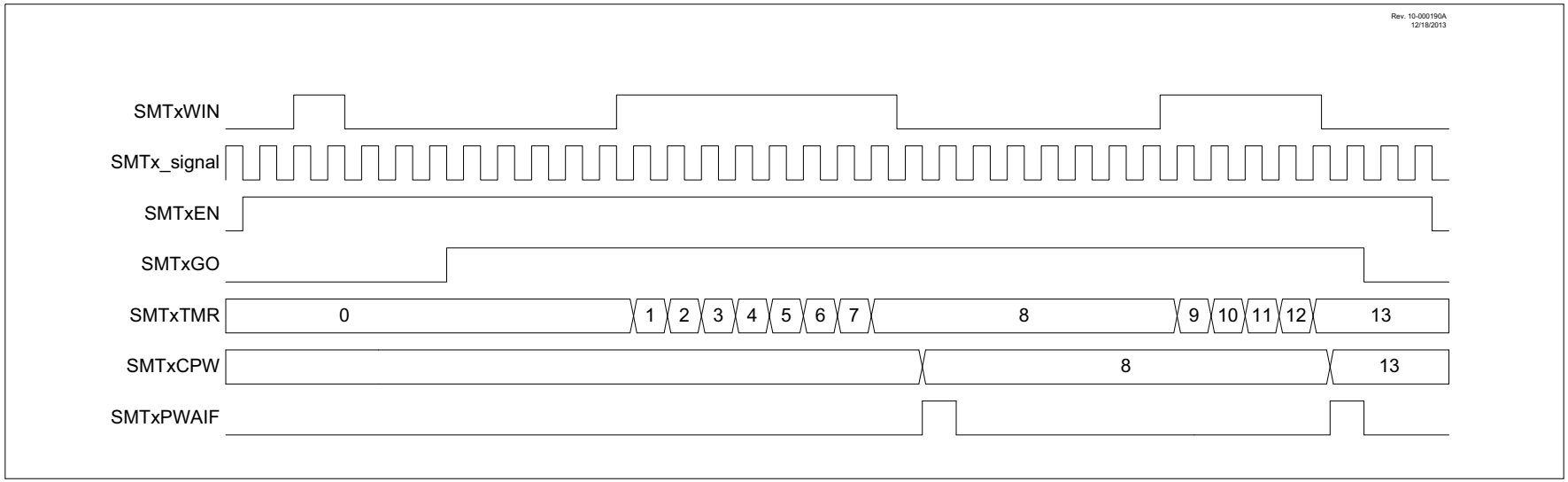

FIGURE 28-20: GATED COUNTER MODE SINGLE ACQUISITION TIMING DIAGRAM

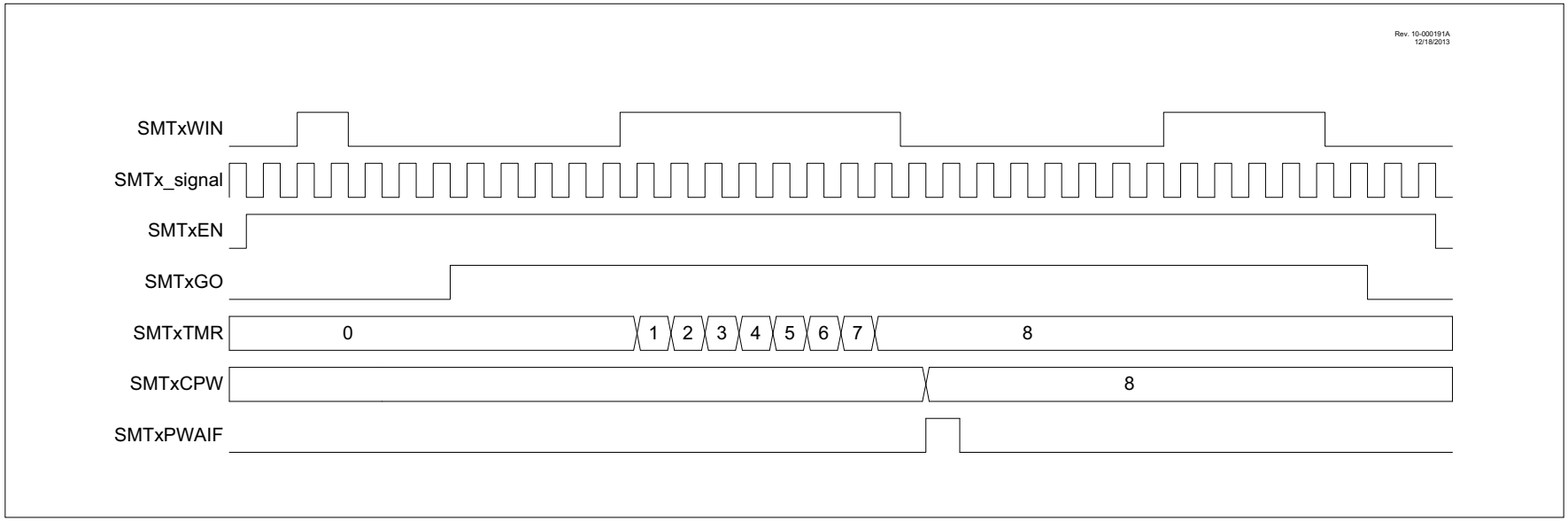

© 2017-2019 Microchip Technology Inc.

28.7.11 WINDOWED COUNTER MODE

Windowed Counter mode counts pulses on the SMTx_signal input, within a window dictated by the SMTxWIN input. It begins counting upon seeing a rising edge of the SMTxWIN input, updates the SMTxCPW register on a falling edge of the SMTxWIN input, and updates the SMTxCPR register on each rising edge of the SMTxWIN input beyond the first. See Figure 28-21 and Figure 28-22.

FIGURE 28-21: WINDOWED COUNTER MODE REPEAT ACQUISITION TIMING DIAGRAM

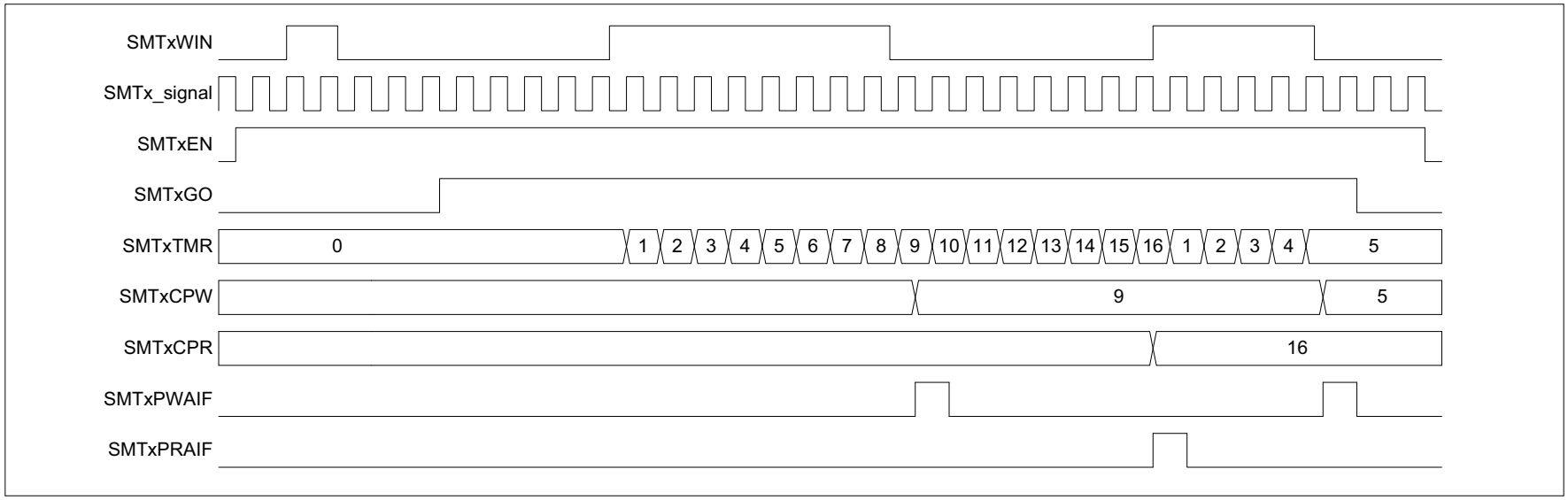

FIGURE 28-22: WINDOWED COUNTER MODE SINGLE ACQUISITION TIMING DIAGRAM

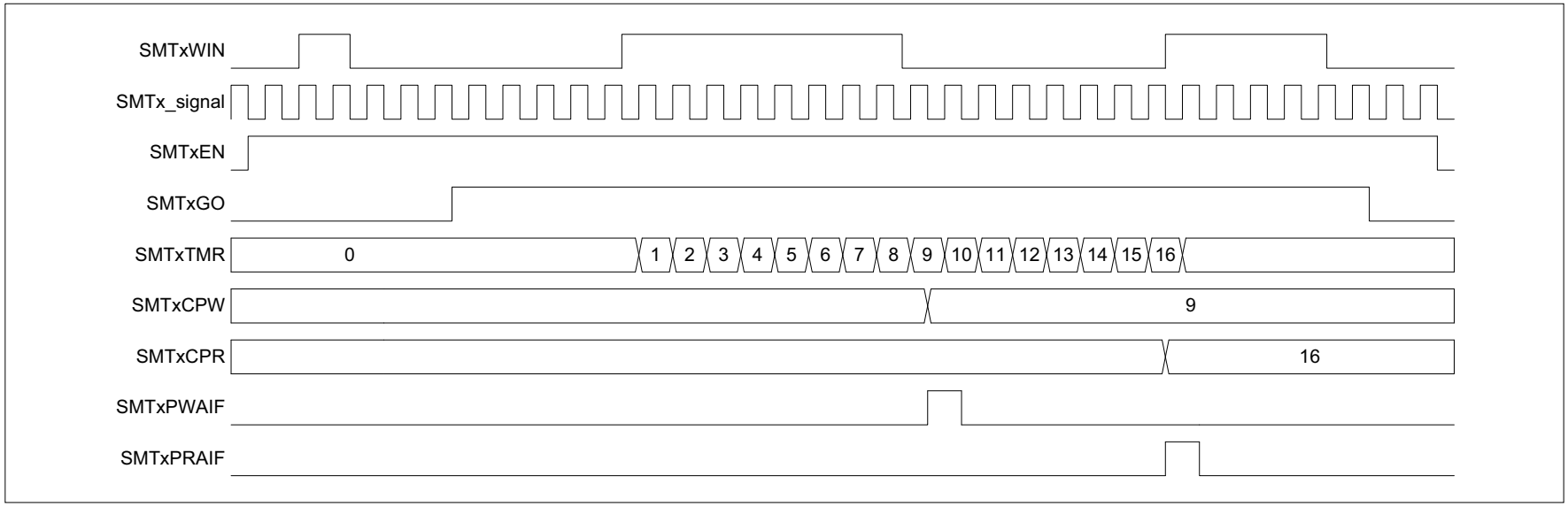

© 2017-2019 Microchip Technology Inc.

28.8 Interrupts

The SMT can trigger an interrupt under three different conditions:

- PW Acquisition Complete
- PR Acquisition Complete
- Counter Period Match

The interrupts are controlled by the PIR8 and PIE8 registers of the device.

28.8.1 PW AND PR ACQUISITION INTERRUPTS

The SMT can trigger interrupts whenever it updates the SMTxCPW and SMTxCPR registers, the circumstances for which are dependent on the SMT mode, and are discussed in each mode's specific section. The SMTxCPW interrupt is controlled by SMTxPWAIF and SMTxPWAIE bits in registers PIR8 and PIE8, respectively. The SMTxCPR interrupt is controlled by the SMTxPRAIF and SMTxPRAIE bits, also located in registers PIR8 and PIE8, respectively.

In Synchronous SMT modes, the interrupt trigger is synchronized to the SMTxCLK. In Asynchronous modes, the interrupt trigger is asynchronous. In either mode, once triggered, the interrupt will be synchronized to the CPU clock.

28.8.2 COUNTER PERIOD MATCH INTERRUPT

As described in **Section 28.2.2 "Period Match interrupt"**, the SMT will also interrupt upon SMTxTMR, matching SMTxPR with its period match limit functionality described in **Section 28.4 "Halt Operation"**. The period match interrupt is controlled by SMTxIF and SMTxIE.

TABLE 28-3: SUMMARY OF REGISTERS ASSOCIATED WITH SMTx

Name	Bit 7	Bit 6	Bit 5	Bit 4	Bit 3	Bit 2	Bit 1	Bit 0	Register on Page
PIE8	LCDIE	RTCCIE	—	—	—	SMT1PWAIE	SMT1PRAIE	SMT1IE	173
PIR8	LCDIF	RTCCIF	—	—	—	SMT1PWAIF	SMT1PRAIF	SMT1IF	182
SMT1CLK	—	—	—	—	—	CSEL<2:0>			414
SMT1CON0	EN	—	STP	WPOL	SPOL	CPOL	SMT1PS<1:0>		411
SMT1CON1	SMT1GO	REPEAT	—	—	MODE<3:0>				412
SMT1CPRH	SMT1CPR<15:8>								418
SMT1CPRL	SMT1CPR<7:0>								418
SMT1CPRU	SMT1CPR<23:16>								418
SMT1CPWH	SMT1CPW<15:8>								419
SMT1CPWL	SMT1CPW<7:0>								419
SMT1CPWU	SMT1CPW<23:16>								419
SMT1PRH	SMT1PR<15:8>								420
SMT1PRL	SMT1PR<7:0>								420
SMT1PRU	SMT1PR<23:16>								420
SMT1SIG	—	—	—	SSEL<4:0>					416
SMT1STAT	CPRUP	CPWUP	RST	—	—	TS	WS	AS	413
SMT1TMRH	SMT1TMR<15:8>								417
SMT1TMRL	SMT1TMR<7:0>								417
SMT1TMRU	SMT1TMR<23:16>								417
SMT1WIN	—	—	—	WSEL<4:0>					415

Legend: x = unknown, u = unchanged, — = unimplemented read as '0', q = value depends on condition. Shaded cells are not used for SMTx module.

29.0 CAPTURE/COMPARE/PWM MODULES

The Capture/Compare/PWM module is a peripheral that allows the user to time and control different events, and to generate Pulse-Width Modulation (PWM) signals. In Capture mode, the peripheral allows the timing of the duration of an event. The Compare mode allows the user to trigger an external event when a predetermined amount of time has expired. The PWM mode can generate Pulse-Width Modulated signals of varying frequency and duty cycle.

The Capture/Compare/PWM modules available are shown in Table 29-1.

TABLE 29-1: AVAILABLE CCP MODULES

Device	CCP1	CCP2
PIC16(L)F19155/56/75/76/85/86	•	•

The Capture and Compare functions are identical for all CCP modules.

Note 1: In devices with more than one CCP module, it is very important to pay close attention to the register names used. A number placed after the module acronym is used to distinguish between separate modules. For example, the CCP1CON and CCP2CON control the same operational aspects of two completely different CCP modules.

2: Throughout this section, generic references to a CCP module in any of its operating modes may be interpreted as being equally applicable to CCPx module. Register names, module signals, I/O pins, and bit names may use the generic designator ‘x’ to indicate the use of a numeral to distinguish a particular module, when required.

29.1 Capture Mode

Capture mode makes use of the 16-bit Timer1 resource. When an event occurs on the capture source, the 16-bit CCPRxH:CCPRxL register pair captures and stores the 16-bit value of the TMR1H:TMR1L register pair, respectively. An event is defined as one of the following and is configured by the CCPxMODE<3:0> bits of the CCPxCON register:

- Every falling edge
- Every rising edge
- Every 4th rising edge
- Every 16th rising edge

When a capture is made, the Interrupt Request Flag bit CCPxIF of the PIR6 register is set. The interrupt flag must be cleared in software. If another capture occurs before the value in the CCPRxH, CCPRxL register pair is read, the old captured value is overwritten by the new captured value.

Figure 29-1 shows a simplified diagram of the capture operation.

29.1.1 CAPTURE SOURCES

In Capture mode, the CCPx pin should be configured as an input by setting the associated TRIS control bit.

Note:	If the CCPx pin is configured as an output, a write to the port can cause a capture condition.

The capture source is selected by configuring the CCPxCTS<2:0> bits of the CCPxCAP register. The following sources can be selected:

- CCPxPPS input
- C1OUT_sync
- C2OUT_sync
- IOC_interrupt
- LC1_out
- LC2_out
- LC3_out
- LC4_out

FIGURE 29-1: CAPTURE MODE OPERATION BLOCK DIAGRAM

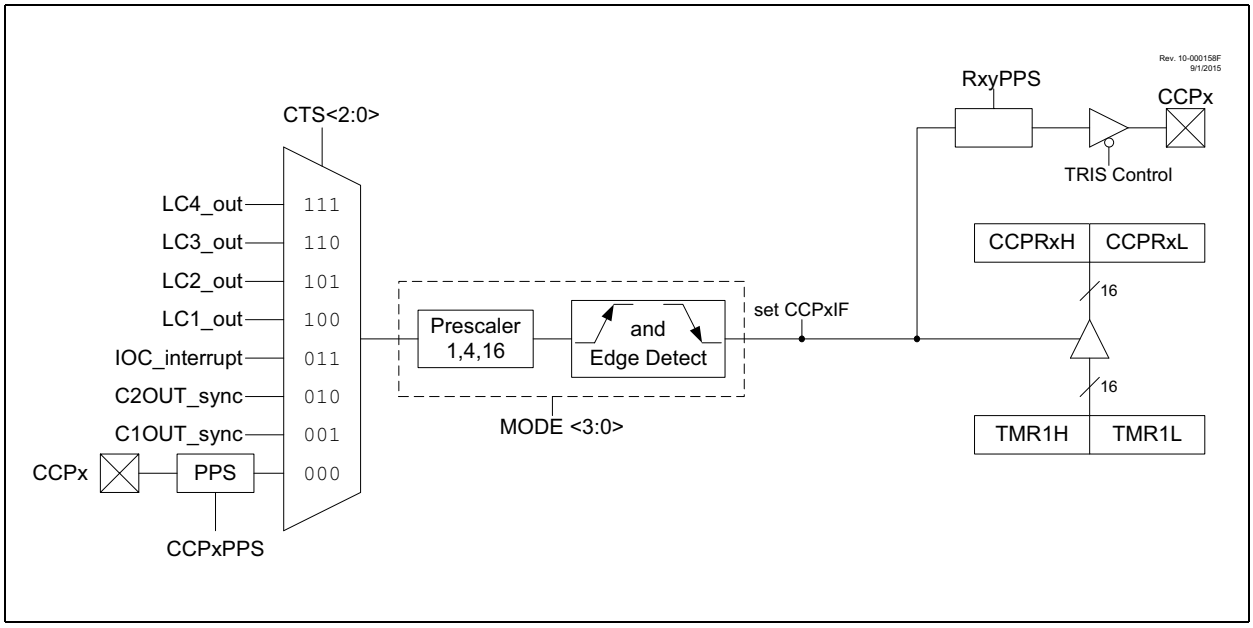

29.1.2 TIMER1 MODE RESOURCE

Timer1 must be running in Timer mode or Synchronized Counter mode for the CCP module to use the capture feature. In Asynchronous Counter mode, the capture operation may not work.

See **Section 26.0 "Timer1 Module with Gate Control"** for more information on configuring Timer1.

29.1.3 SOFTWARE INTERRUPT MODE

When the Capture mode is changed, a false capture interrupt may be generated. The user should keep the CCPxIE interrupt enable bit of the PIE6 register clear to avoid false interrupts. Additionally, the user should clear the CCPxIF interrupt flag bit of the PIR6 register following any change in Operating mode.

Note:	Clocking Timer1 from the system clock (FOSC) should not be used in Capture mode. In order for Capture mode to recognize the trigger event on the CCPx pin, Timer1 must be clocked from the instruction clock (FOSC/4) or from an external clock source.

29.1.4 CCP PRESCALER

There are four prescaler settings specified by the CCPxMODE<3:0> bits of the CCPxCON register. Whenever the CCP module is turned off, or the CCP module is not in Capture mode, the prescaler counter is cleared. Any Reset will clear the prescaler counter.

Switching from one capture prescaler to another does not clear the prescaler and may generate a false interrupt. To avoid this unexpected operation, turn the module off by clearing the CCPxCON register before changing the prescaler. Example 29-1 demonstrates the code to perform this function.

EXAMPLE 29-1: CHANGING BETWEEN CAPTURE PRESCALERS

```
BANKSEL CCPxCON     ;Set Bank bits to point
                    ;to CCPxCON
CLRF    CCPxCON     ;Turn CCP module off
MOVLW   NEW_CAPT_PS ;Load the W reg with
                    ;the new prescaler
                    ;move value and CCP ON
MOVWF   CCPxCON     ;Load CCPxCON with this
                    ;value
```

29.1.5 CAPTURE DURING SLEEP

Capture mode depends upon the Timer1 module for proper operation. There are two options for driving the Timer1 module in Capture mode. It can be driven by the instruction clock (FOSC/4), or by an external clock source.

When Timer1 is clocked by FOSC/4, Timer1 will not increment during Sleep. When the device wakes from Sleep, Timer1 will continue from its previous state.

Capture mode will operate during Sleep when Timer1 is clocked by an external clock source.

29.2 Compare Mode

Compare mode makes use of the 16-bit Timer1 resource. The 16-bit value of the CCPRxH:CCPRxL register pair is constantly compared against the 16-bit value of the TMR1H:TMR1L register pair. When a match occurs, one of the following events can occur:

- Toggle the CCPx output
- Set the CCPx output
- Clear the CCPx output
- Generate an Auto-conversion Trigger
- Generate a Software Interrupt

The action on the pin is based on the value of the CCPxMODE<3:0> control bits of the CCPxCON register. At the same time, the interrupt flag CCPxIF bit is set, and an ADC conversion can be triggered, if selected.

All Compare modes can generate an interrupt and trigger and ADC conversion.

Figure 29-2 shows a simplified diagram of the compare operation.

FIGURE 29-2: COMPARE MODE OPERATION BLOCK DIAGRAM

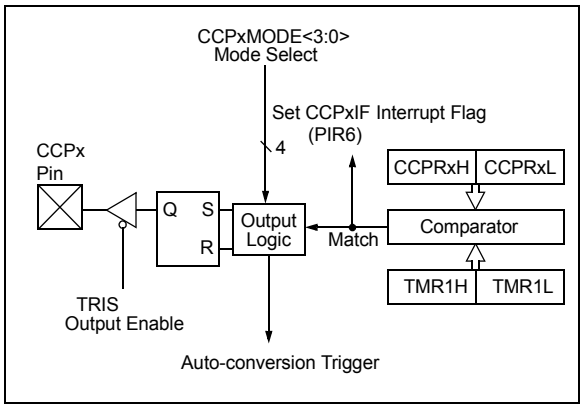

29.2.1 CCPX PIN CONFIGURATION

The software must configure the CCPx pin as an output by clearing the associated TRIS bit and defining the appropriate output pin through the RxyPPS registers. See **Section 15.0 "Peripheral Pin Select (PPS) Module"** for more details.

The CCP output can also be used as an input for other peripherals.

Note:	Clearing the CCPxCON register will force the CCPx compare output latch to the default low level. This is not the PORT I/O data latch.

29.2.2 TIMER1 MODE RESOURCE

In Compare mode, Timer1 must be running in either Timer mode or Synchronized Counter mode. The compare operation may not work in Asynchronous Counter mode.

See **Section 26.0 "Timer1 Module with Gate Control"** for more information on configuring Timer1.

Note:	Clocking Timer1 from the system clock (FOSC) should not be used in Compare mode. In order for Compare mode to recognize the trigger event on the CCPx pin, TImer1 must be clocked from the instruction clock (FOSC/4) or from an external clock source.

29.2.3 AUTO-CONVERSION TRIGGER

All CCPx modes set the CCP interrupt flag (CCPxIF). When this flag is set and a match occurs, an Auto-conversion Trigger can take place if the CCP module is selected as the conversion trigger source.

Refer to **Section 19.2.6 "ADC Conversion Procedure (Basic Mode)"** for more information.

Note:	Removing the match condition by changing the contents of the CCPRxH and CCPRxL register pair, between the clock edge that generates the Auto-conversion Trigger and the clock edge that generates the Timer1 Reset, will preclude the Reset from occurring

29.2.4 COMPARE DURING SLEEP

Since FOSC is shut down during Sleep mode, the Compare mode will not function properly during Sleep, unless the timer is running. The device will wake on interrupt (if enabled).

29.3 PWM Overview

Pulse-Width Modulation (PWM) is a scheme that provides power to a load by switching quickly between fully on and fully off states. The PWM signal resembles a square wave where the high portion of the signal is considered the on state and the low portion of the signal is considered the off state. The high portion, also known as the pulse width, can vary in time and is defined in steps. A larger number of steps applied, which lengthens the pulse width, also supplies more power to the load. Lowering the number of steps applied, which shortens the pulse width, supplies less power. The PWM period is defined as the duration of one complete cycle or the total amount of on and off time combined.

PWM resolution defines the maximum number of steps that can be present in a single PWM period. A higher resolution allows for more precise control of the pulse width time and in turn the power that is applied to the load.

The term duty cycle describes the proportion of the on time to the off time and is expressed in percentages, where 0% is fully off and 100% is fully on. A lower duty cycle corresponds to less power applied and a higher duty cycle corresponds to more power applied.

Figure 29-3 shows a typical waveform of the PWM signal.

29.3.1 STANDARD PWM OPERATION

The standard PWM mode generates a Pulse-Width Modulation (PWM) signal on the CCPx pin with up to ten bits of resolution. The period, duty cycle, and resolution are controlled by the following registers:

- PR2 registers
- T2CON registers
- CCPRxL registers
- CCPxCON registers

Figure 29-4 shows a simplified block diagram of PWM operation.

Note:	The corresponding TRIS bit must be cleared to enable the PWM output on the CCPx pin.

FIGURE 29-3: CCP PWM OUTPUT SIGNAL

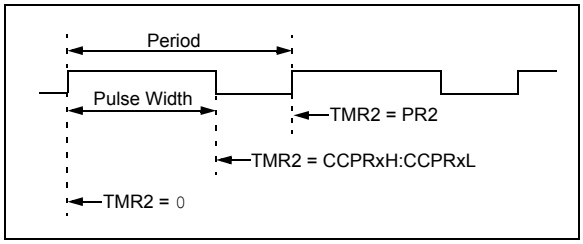

FIGURE 29-4: SIMPLIFIED PWM BLOCK DIAGRAM

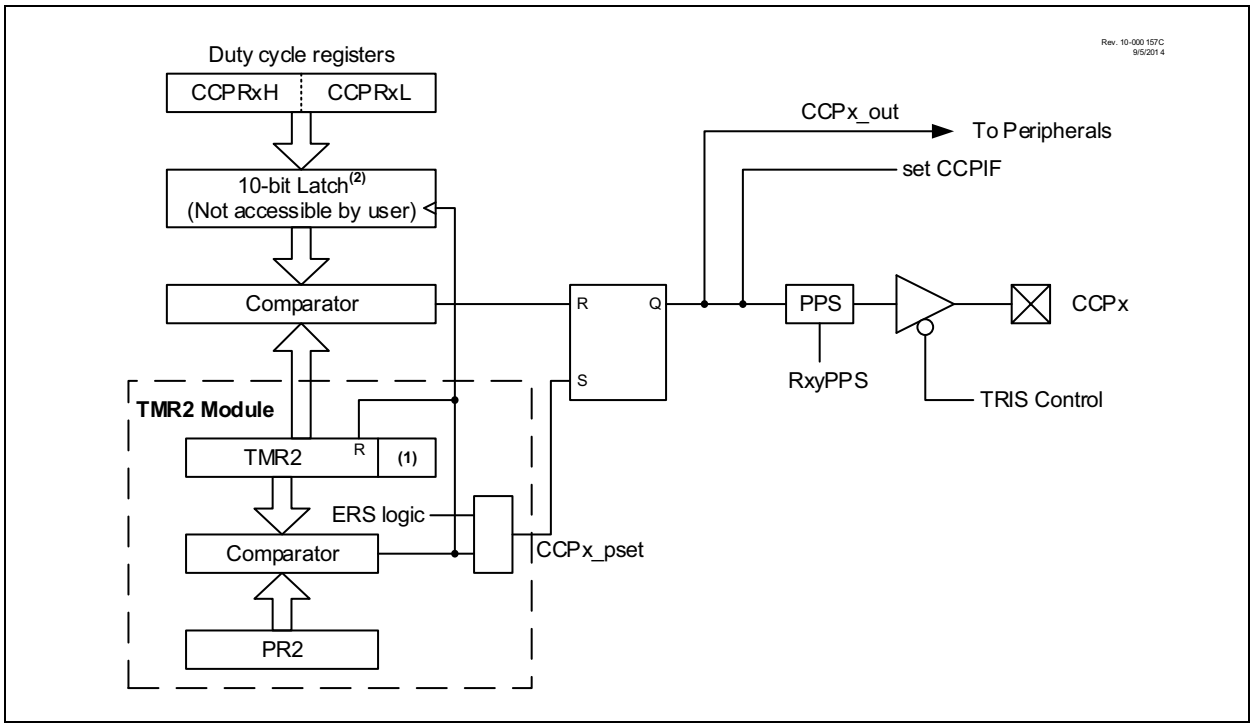

29.3.2 SETUP FOR PWM OPERATION

The following steps should be taken when configuring the CCP module for standard PWM operation:

1. Use the desired output pin RxyPPS control to select CCPx as the source and disable the CCPx pin output driver by setting the associated TRIS bit.
2. Load the PR2 register with the PWM period value.
3. Configure the CCP module for the PWM mode by loading the CCPxCON register with the appropriate values.
4. Load the CCPRxL register, and the CCPRxH register with the PWM duty cycle value and configure the CCPxFMT bit of the CCPxCON register to set the proper register alignment.
5. Configure and start Timer2:
   - Clear the TMR2IF interrupt flag bit of the PIR4 register. See Note below.
   - Configure the CKPS bits of the T2CON register with the Timer prescale value.
   - Enable the Timer by setting the Timer2 ON bit of the T2CON register.
6. Enable PWM output pin:
   - Wait until the Timer overflows and the TMR2IF bit of the PIR4 register is set. See Note below.
   - Enable the CCPx pin output driver by clearing the associated TRIS bit.

Note:	In order to send a complete duty cycle and period on the first PWM output, the above steps must be included in the setup sequence. If it is not critical to start with a complete PWM signal on the first output, then step 6 may be ignored.

29.3.3 CCP/PWM CLOCK SELECTION

The PIC16(L)F19155/56/75/76/85/86 allows each individual CCP and PWM module to select the timer source that controls the module. Each module has an independent selection.

29.3.4 TIMER2 TIMER RESOURCE

This device has a newer version of the Timer2 module that has many new modes, which allow for greater customization and control of the PWM signals than on older parts. Refer to **Section 27.5 "Operation Examples"** for examples of PWM signal generation using the different modes of Timer2. The CCP operation requires that the timer used as the PWM time base has the FOSC/4 clock source selected

29.3.5 PWM PERIOD

The PWM period is specified by the PR2 register of Timer2. The PWM period can be calculated using the formula of Equation 29-1.

EQUATION 29-1: PWM PERIOD

$$PWM\ Period = [(PR2) + 1] \bullet 4 \bullet T_{OSC} \bullet (TMR2\ Prescale\ Value)$$

Note 1: TOSC = 1/FOSC

When TMR2 is equal to PR2, the following three events occur on the next increment cycle:

- TMR2 is cleared
- The CCPx pin is set. (Exception: If the PWM duty cycle = 0%, the pin will not be set.)
- The PWM duty cycle is transferred from the CCPRxL/H register pair into a 10-bit buffer.

Note: The Timer postscaler (see **Section 27.4 "Timer2/4 Interrupt"**) is not used in the determination of the PWM frequency.

29.3.6 PWM DUTY CYCLE

The PWM duty cycle is specified by writing a 10-bit value to the CCPRxH:CCPRxL register pair. The alignment of the 10-bit value is determined by the CCPRxFMT bit of the CCPxCON register (see Figure 29-5). The CCPRxH:CCPRxL register pair can be written to at any time; however the duty cycle value is not latched into the 10-bit buffer until after a match between PR2 and TMR2.

Equation 29-2 is used to calculate the PWM pulse width.

Equation 29-3 is used to calculate the PWM duty cycle ratio.

FIGURE 29-5: PWM 10-BIT ALIGNMENT

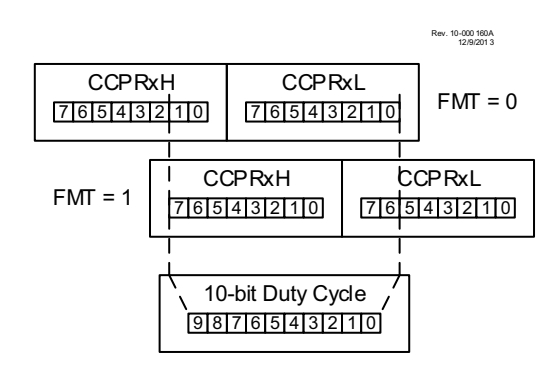

EQUATION 29-2: PULSE WIDTH

$$Pulse\ Width = (CCPRxH{:}CCPRxL\ register\ pair) \bullet T_{OSC} \bullet (TMR2\ Prescale\ Value)$$

EQUATION 29-3: DUTY CYCLE RATIO

$$Duty\ Cycle\ Ratio = \frac{(CCPRxH{:}CCPRxL\ register\ pair)}{4(PR2 + 1)}$$

CCPRxH:CCPRxL register pair are used to double buffer the PWM duty cycle. This double buffering provides for glitchless PWM operation.

The 8-bit timer TMR2 register is concatenated with either the 2-bit internal system clock (FOSC), or two bits of the prescaler, to create the 10-bit time base. The system clock is used if the Timer2 prescaler is set to 1:1.

When the 10-bit time base matches the CCPRxH:CCPRxL register pair, then the CCPx pin is cleared (see Figure 29-4).

29.3.7 PWM RESOLUTION

The resolution determines the number of available duty cycles for a given period. For example, a 10-bit resolution will result in 1024 discrete duty cycles, whereas an 8-bit resolution will result in 256 discrete duty cycles.

The maximum PWM resolution is ten bits when PR2 is 255. The resolution is a function of the PR2 register value as shown by Equation 29-4.

EQUATION 29-4: PWM RESOLUTION

$$Resolution = \frac{\log[4(PR2 + 1)]}{\log(2)}\ bits$$

Note: If the pulse-width value is greater than the period, the assigned PWM pin(s) will remain unchanged.

TABLE 29-2: EXAMPLE PWM FREQUENCIES AND RESOLUTIONS (FOSC = 20 MHz)

PWM Frequency	1.22 kHz	4.88 kHz	19.53 kHz	78.12 kHz	156.3 kHz	208.3 kHz
Timer Prescale	16	4	1	1	1	1
PR2 Value	0xFF	0xFF	0xFF	0x3F	0x1F	0x17
Maximum Resolution (bits)	10	10	10	8	7	6.6

TABLE 29-3: EXAMPLE PWM FREQUENCIES AND RESOLUTIONS (FOSC = 8 MHz)

PWM Frequency	1.22 kHz	4.90 kHz	19.61 kHz	76.92 kHz	153.85 kHz	200.0 kHz
Timer Prescale	16	4	1	1	1	1
PR2 Value	0x65	0x65	0x65	0x19	0x0C	0x09
Maximum Resolution (bits)	8	8	8	6	5	5

29.3.8 OPERATION IN SLEEP MODE

In Sleep mode, the TMR2 register will not increment and the state of the module will not change. If the CCPx pin is driving a value, it will continue to drive that value. When the device wakes up, TMR2 will continue from its previous state.

29.3.9 CHANGES IN SYSTEM CLOCK FREQUENCY

The PWM frequency is derived from the system clock frequency. Any changes in the system clock frequency will result in changes to the PWM frequency. See **Section 9.0 “Oscillator Module (with Fail-Safe Clock Monitor)”** for additional details.

29.3.10 EFFECTS OF RESET

Any Reset will force all ports to Input mode and the CCP registers to their Reset states.

29.4 Register Definitions: CCP Control

Long bit name prefixes for the CCP peripherals are shown in **Section 1.1 "Register and Bit Naming Conventions"**.

TABLE 29-4: LONG BIT NAMES PREFIXES FOR CCP PERIPHERALS

Peripheral	Bit Name Prefix
CCP1	CCP1
CCP2	CCP2

REGISTER 29-1: CCPxCON: CCPx CONTROL REGISTER

R/W-0/0	U-0	R-x	R/W-0/0	R/W-0/0	R/W-0/0	R/W-0/0	R/W-0/0
EN	—	OUT	FMT	MODE<3:0>			
bit 7							bit 0

Legend:		
R = Readable bit	W = Writable bit	U = Unimplemented bit, read as '0'
u = Bit is unchanged	x = Bit is unknown	-n/n = Value at POR and BOR/Value at all other Reset
'1' = Bit is set	'0' = Bit is cleared	

bit 7 **EN:** CCPx Module Enable bit
1 = CCPx is enabled
0 = CCPx is disabled

bit 6 **Unimplemented:** Read as '0'

bit 5 **OUT:** CCPx Output Data bit (read-only)

bit 4 **FMT:** CCPW (Pulse Width) Alignment bit
MODE = Capture mode
Unused
MODE = Compare mode
Unused
MODE = PWM mode
1 = Left-aligned format
0 = Right-aligned format

REGISTER 29-1: CCPxCON: CCPx CONTROL REGISTER (CONTINUED)

bit 3-0 **MODE<3:0>:** CCPx Mode Select bits[(1)]

1111 = PWM mode
1110 = Reserved
1101 = Reserved
1100 = Reserved

1011 = Compare mode: output will pulse 0-1-0; Clears TMR1
1010 = Compare mode: output will pulse 0-1-0
1001 = Compare mode: clear output on compare match
1000 = Compare mode: set output on compare match

0111 = Capture mode: every 16th rising edge of CCPx input
0110 = Capture mode: every 4th rising edge of CCPx input
0101 = Capture mode: every rising edge of CCPx input
0100 = Capture mode: every falling edge of CCPx input

0011 = Capture mode: every edge of CCPx input
0010 = Compare mode: toggle output on match
0001 = Compare mode: toggle output on match; clear TMR1
0000 = Capture/Compare/PWM off (resets CCPx module)

Note 1: All modes will set the CCPxIF bit, and will trigger an ADC conversion if CCPx is selected as the ADC trigger source.

REGISTER 29-2: CCPxCAP: CAPTURE INPUT SELECTION REGISTER

U-0	U-0	U-0	U-0	U-0	R/W-0/x	R/W-0/x	R/W-0/x
—	—	—	—	—	CTS<2:0>		
bit 7							bit 0

Legend:		
R = Readable bit	W = Writable bit	U = Unimplemented bit, read as ‘0’
u = Bit is unchanged	x = Bit is unknown	-n/n = Value at POR and BOR/Value at all other Reset
‘1’ = Bit is set	‘0’ = Bit is cleared	

bit 7-3 **Unimplemented:** Read as ‘0’

bit 2-0 **CTS<2:0>:** Capture Trigger Input Selection bits

CTS	CCP1.capture	CCP2.capture
1000	RTCC_seconds	
0111	LC4_out	
0110	LC3_out	
0101	LC2_out	
0100	LC1_out	
0011	IOC_interrupt	
0010	C2OUT	
0001	C1OUT	
0000	CCP1PPS	CCP2PPS

REGISTER 29-3: CCPRxL REGISTER: CCPx REGISTER LOW BYTE

R/W-x/x	R/W-x/x	R/W-x/x	R/W-x/x	R/W-x/x	R/W-x/x	R/W-x/x	R/W-x/x
CCPRx<7:0>							
bit 7							bit 0

Legend:		
R = Readable bit	W = Writable bit	U = Unimplemented bit, read as ‘0’
u = Bit is unchanged	x = Bit is unknown	-n/n = Value at POR and BOR/Value at all other Reset
‘1’ = Bit is set	‘0’ = Bit is cleared	

bit 7-0 CCPxMODE = Capture mode
CCPRxL<7:0>: Capture value of TMR1L
CCPxMODE = Compare mode
CCPRxL<7:0>: LS Byte compared to TMR1L
CCPxMODE = PWM modes when CCPxFMT = 0:
CCPRxL<7:0>: Pulse-width Least Significant eight bits
CCPxMODE = PWM modes when CCPxFMT = 1:
CCPRxL<7:6>: Pulse-width Least Significant two bits
CCPRxL<5:0>: Not used.

REGISTER 29-4: CCPRxH REGISTER: CCPx REGISTER HIGH BYTE

R/W-x/x	R/W-x/x	R/W-x/x	R/W-x/x	R/W-x/x	R/W-x/x	R/W-x/x	R/W-x/x
CCPRx<15:8>							
bit 7							bit 0

Legend:		
R = Readable bit	W = Writable bit	U = Unimplemented bit, read as ‘0’
u = Bit is unchanged	x = Bit is unknown	-n/n = Value at POR and BOR/Value at all other Reset
‘1’ = Bit is set	‘0’ = Bit is cleared	

bit 7-0 CCPxMODE = Capture mode
CCPRxH<7:0>: Captured value of TMR1H
CCPxMODE = Compare mode
CCPRxH<7:0>: MS Byte compared to TMR1H
CCPxMODE = PWM modes when CCPxFMT = 0:
CCPRxH<7:2>: Not used
CCPRxH<1:0>: Pulse-width Most Significant two bits
CCPxMODE = PWM modes when CCPxFMT = 1:
CCPRxH<7:0>: Pulse-width Most Significant eight bits

REGISTER 29-5: CCPTMRS0: CCP TIMERS CONTROL 0 REGISTER

R/W-0/0	R/W-1/1	R/W-0/0	R/W-1/1	R/W-0/0	R/W-1/1	R/W-0/0	R/W-1/1
P4TSEL<1:0>		P3TSEL<1:0>		C2TSEL<1:0>		C1TSEL<1:0>	
bit 7							bit 0

Legend:		
R = Readable bit	W = Writable bit	U = Unimplemented bit, read as ‘0’
u = Bit is unchanged	x = Bit is unknown	-n/n = Value at POR and BOR/Value at all other Reset
‘1’ = Bit is set	‘0’ = Bit is cleared	

bit 7-6 **P4TSEL<1:0>:** PWM4 Timer Selection bit
11 = Reserved
10 = PWM4 based on TMR4
01 = PWM4 based on TMR2
00 = Reserved

bit 5-4 **P3TSEL<1:0>:** PWM3 Timer Selection bit
11 = Reserved
10 = PWM3 based on TMR4
01 = PWM3 based on TMR2
00 = Reserved

bit 3-2 **C2TSEL<1:0>:** CCP2 Timer Selection bit
11 = Reserved
10 = CCP2 based on TMR1 (Capture/Compare) or TMR4 (PWM)
01 = CCP2 based on TMR1 (Capture/Compare) or TMR2 (PWM)
00 = Reserved

bit 1-0 **C1TSEL<1:0>:** CCP1 Timer Selection bit
11 = Reserved
10 = CCP1 based on TMR1 (Capture/Compare) or TMR4 (PWM)
01 = CCP1 based on TMR1 (Capture/Compare) or TMR2 (PWM)
00 = Reserved

TABLE 29-5: SUMMARY OF REGISTERS ASSOCIATED WITH CCPx

Name	Bit 7	Bit 6	Bit 5	Bit 4	Bit 3	Bit 2	Bit 1	Bit 0	Register on Page
INTCON	GIE	PEIE	—	—	—	—	—	INTEDG	164
PIR4	—	—	—	—	TMR4IF	—	TMR2IF	TMR1IF	178
PIE4	—	—	—	—	TMR4IE	—	TMR2IE	TMR1IE	169
CCP1CON	EN	—	OUT	FMT	MODE<3:0>				459
CCP1CAP	—	—	—	—	—	CTS<2:0>			461
CCPR1L	Capture/Compare/PWM Register 1 (LSB)								461
CCPR1H	Capture/Compare/PWM Register 1 (MSB)								462
CCP2CON	EN	—	OUT	FMT	MODE<3:0>				459
CCP2CAP	—	—	—	—	—	CTS<2:0>			461
CCPR2L	Capture/Compare/PWM Register 1 (LSB)								461
CCPR2H	Capture/Compare/PWM Register 1 (MSB)								461
CCPTMRS0	P4TSEL<1:0>		P3TSEL<1:0>		C2TSEL<1:0>		C1TSEL<1:0>		462
CCP1PPS	—	—	—	CCP1PPS<4:0>					264
CCP2PPS	—	—	—	CCP2PPS<4:0>					264
RxyPPS	—	—	—	RxyPPS<4:0>					265
ADACT	—	—	—	ACT<4:0>					324
CLCxSELy	—	—	—	LCxDyS<4:0>					504
CWG1ISM	—	—	—	—	IS<3:0>				493

Legend: — = Unimplemented location, read as '0'. Shaded cells are not used by the CCPx module.

30.0 PULSE-WIDTH MODULATION (PWM)

The PWMx modules generate Pulse-Width Modulated (PWM) signals of varying frequency and duty cycle.

In addition to the CCP modules, the PIC16(L)F19155/56/75/76/85/86 devices contain two PWM modules (PWM3 and PWM4). The PWM modules reproduce the PWM capability of the CCP modules.

> **Note:** The PWM3/4 modules are two instances of the same PWM module design. Throughout this section, the lower case 'x' in register and bit names is a generic reference to the PWM module number (which should be substituted with 3, or 4 during code development). For example, the control register is generically described in this chapter as PWMxCON, but the actual device registers are PWM3CON and PWM4CON. Similarly, the PWMxEN bit represents the PWM3EN and PWM4EN bits.

Pulse-Width Modulation (PWM) is a scheme that provides power to a load by switching quickly between fully ON and fully OFF states. The PWM signal resembles a square wave where the high portion of the signal is considered the 'ON' state (pulse width), and the low portion of the signal is considered the 'OFF' state. The term duty cycle describes the proportion of the 'on' time to the 'off' time and is expressed in percentages, where 0% is fully off and 100% is fully on. A lower duty cycle corresponds to less power applied and a higher duty cycle corresponds to more power applied. The PWM period is defined as the duration of one complete cycle or the total amount of on and off time combined.

PWM resolution defines the maximum number of steps that can be present in a single PWM period. A higher resolution allows for more precise control of the pulse width time and, in turn, the power that is applied to the load.

Figure 30-1 shows a typical waveform of the PWM signal.

FIGURE 30-1: PWM OUTPUT

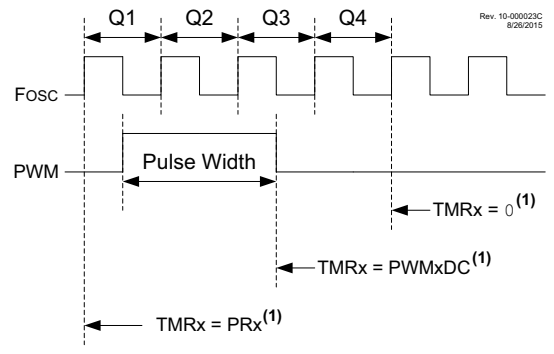

Note 1: Timer dependent on PWMTMRS register settings.

30.1 Standard PWM Mode

The standard PWM mode generates a Pulse-Width Modulation (PWM) signal on the PWMx pin with up to ten bits of resolution. The period, duty cycle, and resolution are controlled by the following registers:

- TMR2 register
- PR2 register
- PWMxCON registers
- PWMxDCH registers
- PWMxDCL registers

Figure 30-2 shows a simplified block diagram of PWM operation.

If PWMPOL = 0, the default state of the output is '0'. If PWMPOL = 1, the default state is '1'. If PWMEN = 0, the output will be the default state.

Note 1: The corresponding TRIS bit must be cleared to enable the PWM output on the PWMx pin.

2: Two identical Timer2 modules are implemented on this device. The timers are named Timer2 and Timer4. All references to Timer2 apply as well to Timer4. All references to T2PR apply as well to T4PR.

FIGURE 30-2: SIMPLIFIED PWM BLOCK DIAGRAM

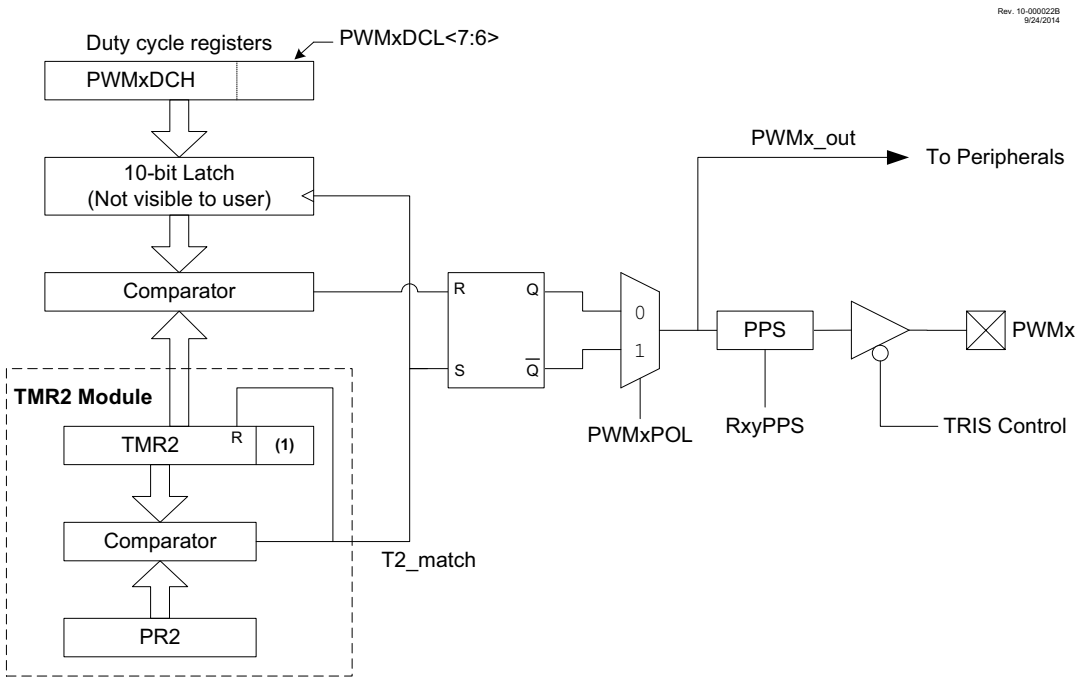

Note 1: 8-bit timer is concatenated with two bits generated by Fosc or two bits of the internal prescaler to create 10-bit time-base.

30.1.1 PWM CLOCK SELECTION

The PIC16(L)F19155/56/75/76/85/86 allows each individual CCP and PWM module to select the timer source that controls the module. Each module has an independent selection.

30.1.2 USING THE TMR2 WITH THE PWM MODULE

This device has a newer version of the TMR2 module that has many new modes, which allow for greater customization and control of the PWM signals than on older parts. Refer to **Section 27.5 "Operation Examples"** for examples of PWM signal generation using the different modes of Timer2.

Note:	PWM operation requires that the timer used as the PWM time base has the FOSC/4 clock source selected.

30.1.3 PWM PERIOD

Referring to Figure 30-1, the PWM output has a period and a pulse width. The frequency of the PWM is the inverse of the period (1/period).

The PWM period is specified by writing to the PR2 register. The PWM period can be calculated using the following formula:

EQUATION 30-1: PWM PERIOD

$$PWM\ Period = [(PR2) + 1] \cdot 4 \cdot TOSC \cdot (TMR2\ Prescale\ Value)$$

Note 1: TOSC = 1/FOSC

When TMR2 is equal to PR2, the following three events occur on the next increment cycle:

- TMR2 is cleared
- The PWMx pin is set (Exception: If the PWM duty cycle = 0%, the pin will not be set.)
- The PWM pulse width is latched from PWMxDC.

Note:	If the pulse-width value is greater than the period, the assigned PWM pin(s) will remain unchanged.

30.1.4 PWM DUTY CYCLE

The PWM duty cycle is specified by writing a 10-bit value to the PWMxDC register. The PWMxDCH contains the eight MSbs and the PWMxDCL<7:6> bits contain the two LSbs.

The PWMDC register is double-buffered and can be updated at any time. This double buffering is essential for glitch-free PWM operation. New values take effect when TMR2 = PR2. Note that PWMDC is left-justified.

The 8-bit timer TMR2 register is concatenated with either the 2-bit internal system clock (FOSC), or two bits of the prescaler, to create the 10-bit time base. The system clock is used if the Timer2 prescaler is set to 1:1.

Equation 30-2 is used to calculate the PWM pulse width.

Equation 30-3 is used to calculate the PWM duty cycle ratio.

EQUATION 30-2: PULSE WIDTH

$$Pulse\ Width = (PWMxDC) \cdot TOSC \cdot (TMR2\ Prescale\ Value)$$

EQUATION 30-3: DUTY CYCLE RATIO

$$Duty\ Cycle\ Ratio = \frac{(PWMxDC)}{4(PR2 + 1)}$$

30.1.5 PWM RESOLUTION

The resolution determines the number of available duty cycles for a given period. For example, a 10-bit resolution will result in 1024 discrete duty cycles, whereas an 8-bit resolution will result in 256 discrete duty cycles.

The maximum PWM resolution is ten bits when PR2 is 255. The resolution is a function of the PR2 register value as shown by Equation 30-4.

EQUATION 30-4: PWM RESOLUTION

$$Resolution = \frac{\log[4(PR2 + 1)]}{\log(2)}\ bits$$

30.1.6 OPERATION IN SLEEP MODE

To operate in Sleep, TMR2 must be configured to use a clock source which is active during Sleep. Otherwise, the TMR2 register will not increment and the state of the module will not change. If the PWMx pin is driving a value, it will continue to drive that value. When the device wakes up, TMR2 will continue from its previous state.

30.1.7 CHANGES IN SYSTEM CLOCK FREQUENCY

The PWM frequency is derived from the timer clock frequency. Any changes in the system clock frequency will result in changes to the PWM frequency. See **Section 9.0 "Oscillator Module (with Fail-Safe Clock Monitor)"** for additional details.

30.1.8 EFFECTS OF RESET

Any Reset will force all ports to Input mode and the PWMx registers to their Reset states.

TABLE 30-1: EXAMPLE PWM FREQUENCIES AND RESOLUTIONS (FOSC = 20 MHz)

PWM Frequency	1.22 kHz	4.88 kHz	19.53 kHz	78.12 kHz	156.3 kHz	208.3 kHz
Timer Prescale	16	4	1	1	1	1
PR2 Value	0xFF	0xFF	0xFF	0x3F	0x1F	0x17
Maximum Resolution (bits)	10	10	10	8	7	6.6

TABLE 30-2: EXAMPLE PWM FREQUENCIES AND RESOLUTIONS (FOSC = 8 MHz)

PWM Frequency	1.22 kHz	4.90 kHz	19.61 kHz	76.92 kHz	153.85 kHz	200.0 kHz
Timer Prescale	16	4	1	1	1	1
PR2 Value	0xFF	0xFF	0xFF	0x3F	0x1F	0x17
Maximum Resolution (bits)	10	10	10	8	7	6.6

30.1.9 SETUP FOR PWM OPERATION

The following steps should be taken when configuring the module for using the PWMx outputs:

1. Disable the PWMx pin output driver(s) by setting the associated TRIS bit(s).
2. Configure the PWM output polarity by configuring the PWMxPOL bit of the PWMxCON register.
3. Load the PR2 register with the PWM period value, as determined by Equation 30-1.
4. Load the PWMxDCH register and bits <7:6> of the PWMxDCL register with the PWM duty cycle value, as determined by Equation 30-2.
5. Configure and start Timer2:
   - Clear the TMR2IF interrupt flag bit of the PIR4 register.
   - Select the Timer2 prescale value by configuring the CKPS<2:0> bits of the T2CON register.
   - Enable Timer2 by setting the Timer2 ON bit of the T2CON register.
6. Wait until the TMR2IF is set.
7. When the TMR2IF flag bit is set:
   - Clear the associated TRIS bit(s) to enable the output driver.
   - Route the signal to the desired pin by configuring the RxyPPS register.
   - Enable the PWMx module by setting the PWMxEN bit of the PWMxCON register.

In order to send a complete duty cycle and period on the first PWM output, the above steps must be followed in the order given. If it is not critical to start with a complete PWM signal, then the PWM module can be enabled during Step 2 by setting the PWMxEN bit of the PWMxCON register.

30.2 Register Definitions: PWM Control

REGISTER 30-1: PWMxCON: PWM CONTROL REGISTER

R/W-0/0	U-0	R-0	R/W-0/0	U-0	U-0	U-0	U-0
PWMxEN	—	PWMxOUT	PWMxPOL	—	—	—	—
bit 7							bit 0

Legend:		
R = Readable bit	W = Writable bit	U = Unimplemented bit, read as ‘0’
u = Bit is unchanged	x = Bit is unknown	-n/n = Value at POR and BOR/Value at all other Resets
‘1’ = Bit is set	‘0’ = Bit is cleared	

bit 7 **PWMxEN:** PWM Module Enable bit
1 = PWM module is enabled
0 = PWM module is disabled

bit 6 **Unimplemented:** Read as ‘0’

bit 5 **PWMxOUT:** PWM Module Output Level when Bit is Read

bit 4 **PWMxPOL:** PWMx Output Polarity Select bit
1 = PWM output is active-low
0 = PWM output is active-high

bit 3-0 **Unimplemented:** Read as ‘0’

REGISTER 30-2: PWMxDCH: PWM DUTY CYCLE HIGH BITS

R/W-x/u	R/W-x/u	R/W-x/u	R/W-x/u	R/W-x/u	R/W-x/u	R/W-x/u	R/W-x/u
PWMxDC<9:2>							
bit 7							bit 0

Legend:		
R = Readable bit	W = Writable bit	U = Unimplemented bit, read as ‘0’
u = Bit is unchanged	x = Bit is unknown	-n/n = Value at POR and BOR/Value at all other Resets
‘1’ = Bit is set	‘0’ = Bit is cleared	

bit 7-0 **PWMxDC<9:2>:** PWM Duty Cycle Most Significant bits
These bits are the MSbs of the PWM duty cycle. The two LSbs are found in PWMxDCL Register.

REGISTER 30-3: PWMxDCL: PWM DUTY CYCLE LOW BITS

R/W-x/u	R/W-x/u	U-0	U-0	U-0	U-0	U-0	U-0
PWMxDC<1:0>		—	—	—	—	—	—
bit 7							bit 0

Legend:		
R = Readable bit	W = Writable bit	U = Unimplemented bit, read as ‘0’
u = Bit is unchanged	x = Bit is unknown	-n/n = Value at POR and BOR/Value at all other Resets
‘1’ = Bit is set	‘0’ = Bit is cleared	

bit 7-6 **PWMxDC<1:0>:** PWM Duty Cycle Least Significant bits
These bits are the LSbs of the PWM duty cycle. The MSbs are found in PWMxDCH Register.

bit 5-0 **Unimplemented:** Read as ‘0’

TABLE 30-3: SUMMARY OF REGISTERS ASSOCIATED WITH PWMx

Name	Bit 7	Bit 6	Bit 5	Bit 4	Bit 3	Bit 2	Bit 1	Bit 0	Register on Page
T2CON	ON	CKPS<2:0>			OUTPS<3:0>				405
T2TMR	Holding Register for the 8-bit TMR2 Register								385*
T2PR	TMR2 Period Register								385*
RxyPPS	—	—	—	RxyPPS<4:0>					265
CWG1ISM	—	—	—	—	IS<3:0>				493
CLCxSELy	—	—	LCxDyS<5:0>						504
TRISA	TRISA7	TRISA6	TRISA5	TRISA4	TRISA3	TRISA2	TRISA1	TRISA0	222
TRISC	TRISC7	TRISC6	TRISC5	TRISC4	TRISC3	TRISC2	TRISC1	TRISC0	235
PWM3CON	PWM3EN	—	PWM3OUT	PWM3POL	—	—	—	—	468
PWM4CON	PWM4EN	—	PWM4OUT	PWM4POL	—	—	—	—	468
PWM3DCL	PWM3DC1	PWM3DC0	—	—	—	—	—	—	469
PWM3DCH	PWM3DC9	PWM3DC8	PWM3DC7	PWM3DC6	PWM3DC5	PWM3DC4	PWM3DC3	PWM3DC2	469
PWM4DCL	PWM4DC1	PWM4DC0	—	—	—	—	—	—	469
PWM4DCH	PWM4DC9	PWM4DC8	PWM4DC7	PWM4DC6	PWM4DC5	PWM4DC4	PWM4DC3	PWM4DC2	469

Legend: – = Unimplemented locations, read as '0'. Shaded cells are not used by the PWMx module.

*Page provides register information.

31.0 COMPLEMENTARY WAVEFORM GENERATOR (CWG) MODULE

The Complementary Waveform Generator (CWG) produces half-bridge, full-bridge, and steering of PWM waveforms. It is backwards compatible with previous ECCP functions.

The CWG has the following features:

- Six Operating modes:
  - Synchronous Steering mode
  - Asynchronous Steering mode
  - Full-Bridge mode, Forward
  - Full-Bridge mode, Reverse
  - Half-Bridge mode
  - Push-Pull mode
- Output Polarity Control
- Output Steering:
  - Synchronized to rising event
  - Immediate effect
- Independent 6-Bit Rising and Falling Event Dead-Band Timers:
  - Clocked dead band
  - Independent rising and falling dead-band enables
- Auto-Shutdown Control with:
  - Selectable shutdown sources
  - Auto-restart enable
  - Auto-shutdown pin override control

The CWG modules available are shown in Table 31-1.

TABLE 31-1: AVAILABLE CWG MODULES

Device	CWG1
PIC16(L)F19155/56/75/76/85/86	●

31.1 Fundamental Operation

The CWG module can operate in six different modes, as specified by MODE of the CWG1CON0 register:

- Half-Bridge mode (Figure 31-9)
- Push-Pull mode (Figure 31-2)
  - Full-Bridge mode, Forward (Figure 31-3)
  - Full-Bridge mode, Reverse (Figure 31-3)
- Steering mode (Figure 31-10)
- Synchronous Steering mode (Figure 31-11)

It may be necessary to guard against the possibility of circuit faults or a feedback event arriving too late or not at all. In this case, the active drive must be terminated before the Fault condition causes damage. Thus, all output modes support auto-shutdown, which is covered in **Section 31.10 “Auto-Shutdown”**.

31.1.1 HALF-BRIDGE MODE

In Half-Bridge mode, two output signals are generated as true and inverted versions of the input as illustrated in Figure 31-9. A non-overlap (dead-band) time is inserted between the two outputs as described in **Section 31.5 “Dead-Band Control”**.

The unused outputs CWG1C and CWG1D drive similar signals, with polarity independently controlled by the POLC and POLD bits of the CWG1CON1 register, respectively.

FIGURE 31-1: SIMPLIFIED CWG BLOCK DIAGRAM (HALF-BRIDGE MODE)

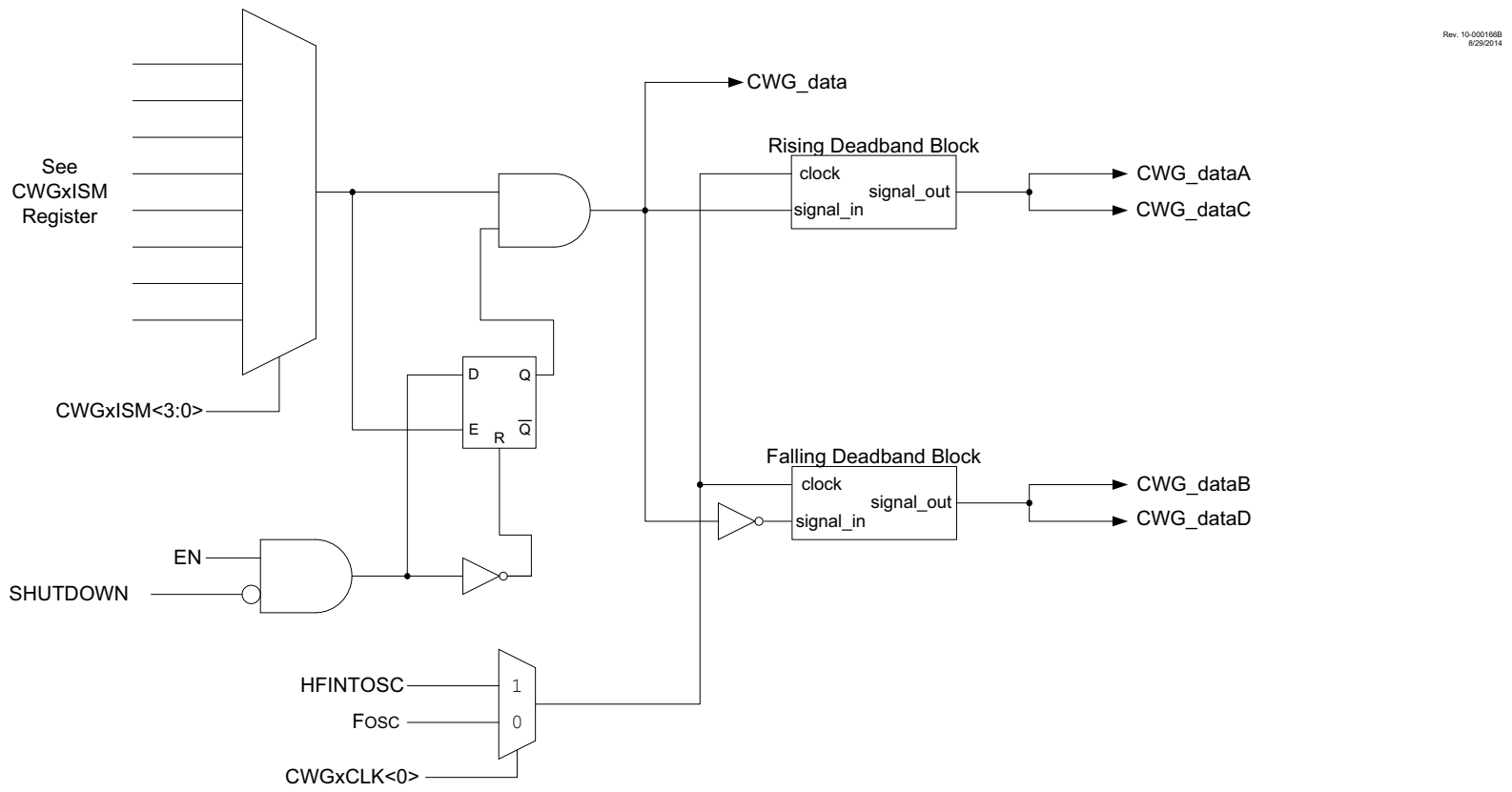

© 2017-2019 Microchip Technology Inc.

31.1.2 PUSH-PULL MODE

In Push-Pull mode, two output signals are generated, alternating copies of the input as illustrated in Figure 31-2. This alternation creates the push-pull effect required for driving some transformer-based power supply designs.

The push-pull sequencer is reset whenever EN = 0 or if an auto-shutdown event occurs. The sequencer is clocked by the first input pulse, and the first output appears on CWG1A.

The unused outputs CWG1C and CWG1D drive copies of CWG1A and CWG1B, respectively, but with polarity controlled by the POLC and POLD bits of the CWG1CON1 register, respectively.

31.1.3 FULL-BRIDGE MODES

In Forward and Reverse Full-Bridge modes, three outputs drive static values while the fourth is modulated by the input data signal. In Forward Full-Bridge mode, CWG1A is driven to its active state, CWG1B and CWG1C are driven to their inactive state, and CWG1D is modulated by the input signal. In Reverse Full-Bridge mode, CWG1C is driven to its active state, CWG1A and CWG1D are driven to their inactive states, and CWG1B is modulated by the input signal. In Full-Bridge mode, the dead-band period is used when there is a switch from forward to reverse or vice-versa. This dead-band control is described in **Section 31.5 “Dead-Band Control”**, with additional details in **Section 31.6 “Rising Edge and Reverse Dead Band”** and **Section 31.7 “Falling Edge and Forward Dead Band”**.

The mode selection may be toggled between forward and reverse toggling the MODE<0> bit of the CWG1CON0 while keeping MODE<2:1> static, without disabling the CWG module.

FIGURE 31-2: SIMPLIFIED CWG BLOCK DIAGRAM (PUSH-PULL MODE)

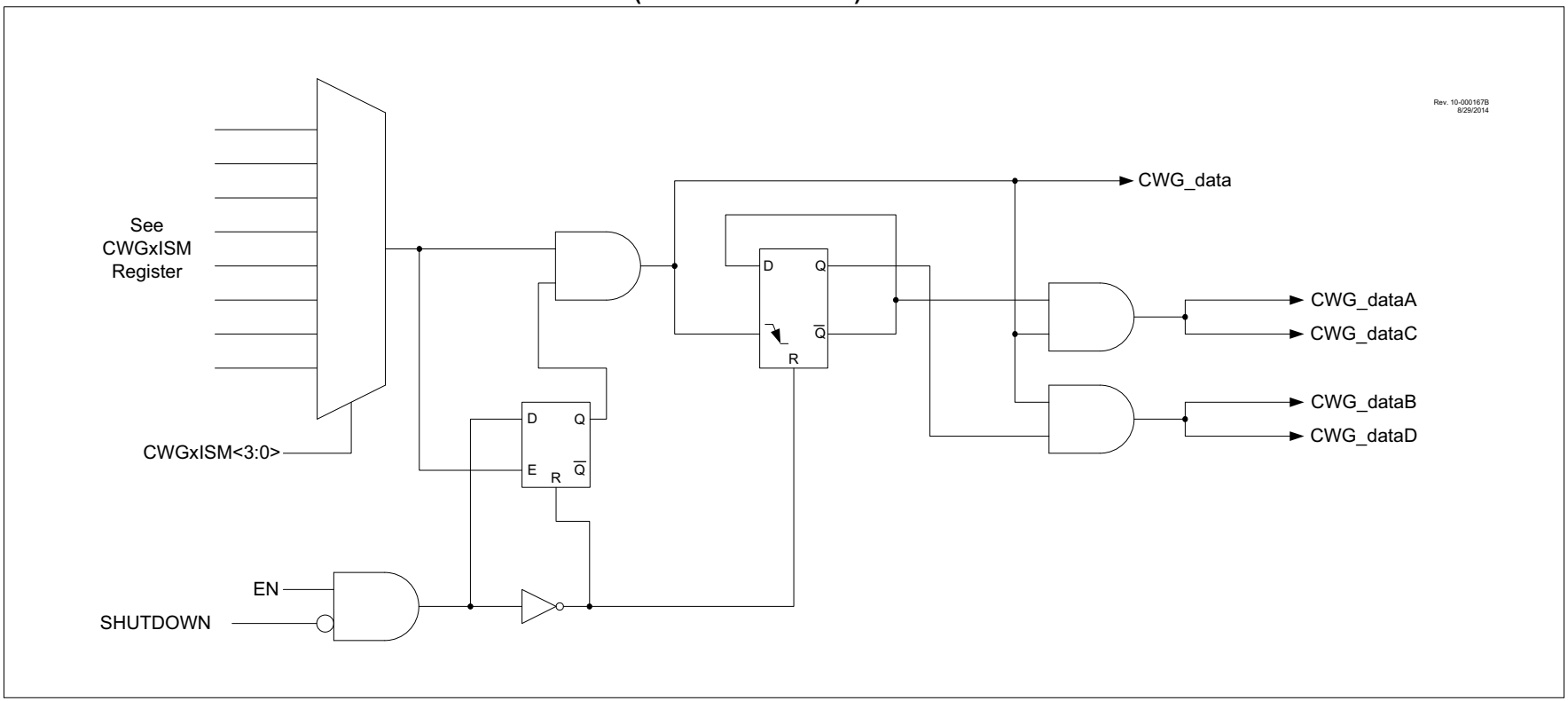

© 2017-2019 Microchip Technology Inc.

FIGURE 31-3: SIMPLIFIED CWG BLOCK DIAGRAM (FORWARD AND REVERSE FULL-BRIDGE MODES)

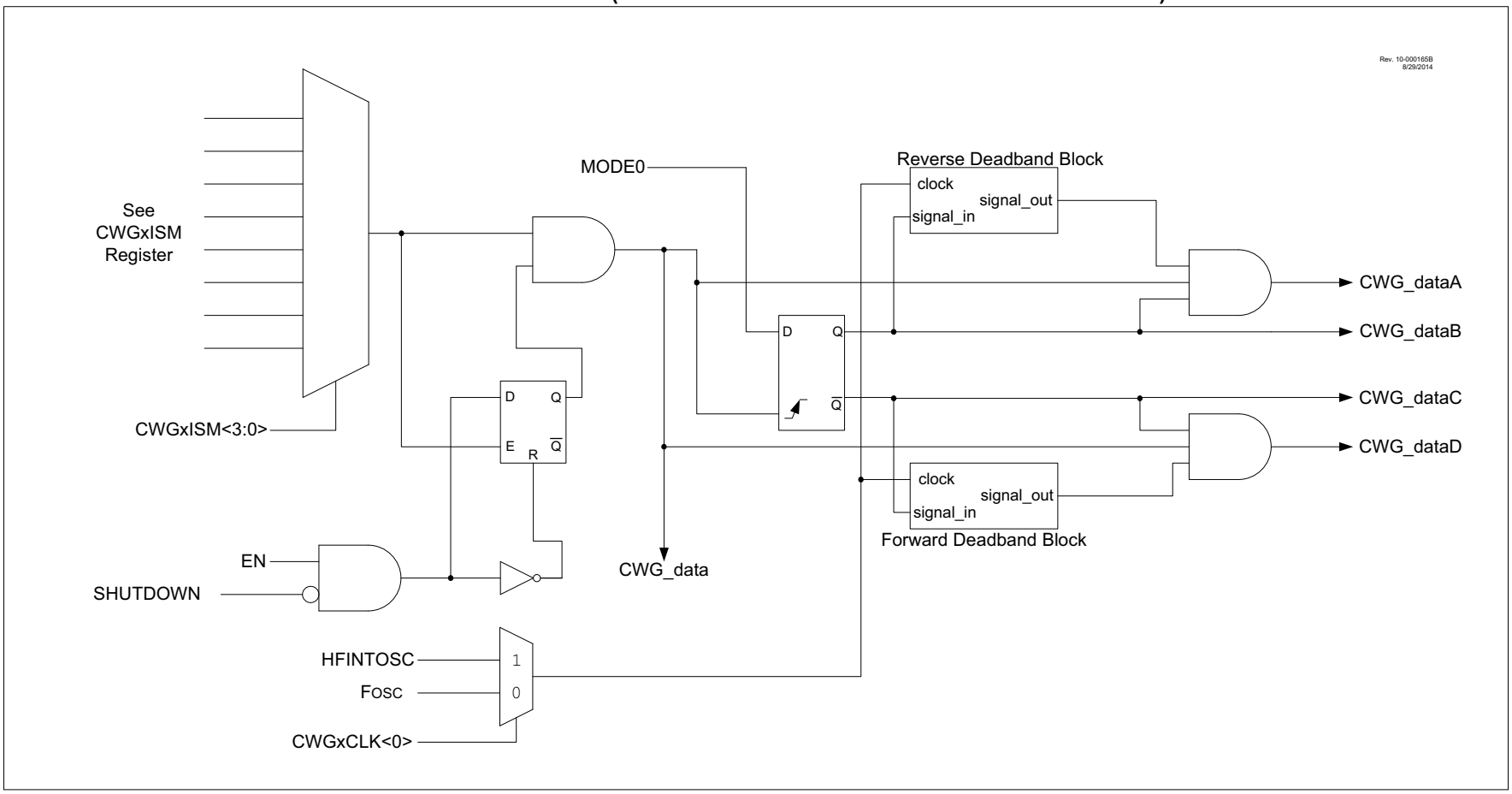

© 2017-2019 Microchip Technology Inc.

31.1.4 STEERING MODES

In Steering modes, the data input can be steered to any or all of the four CWG output pins. In Synchronous Steering mode, changes to steering selection registers take effect on the next rising input.

In Non-Synchronous mode, steering takes effect on the next instruction cycle. Additional details are provided in **Section 31.9 "CWG Steering Mode"**.

FIGURE 31-4: SIMPLIFIED CWG BLOCK DIAGRAM (OUTPUT STEERING MODES)

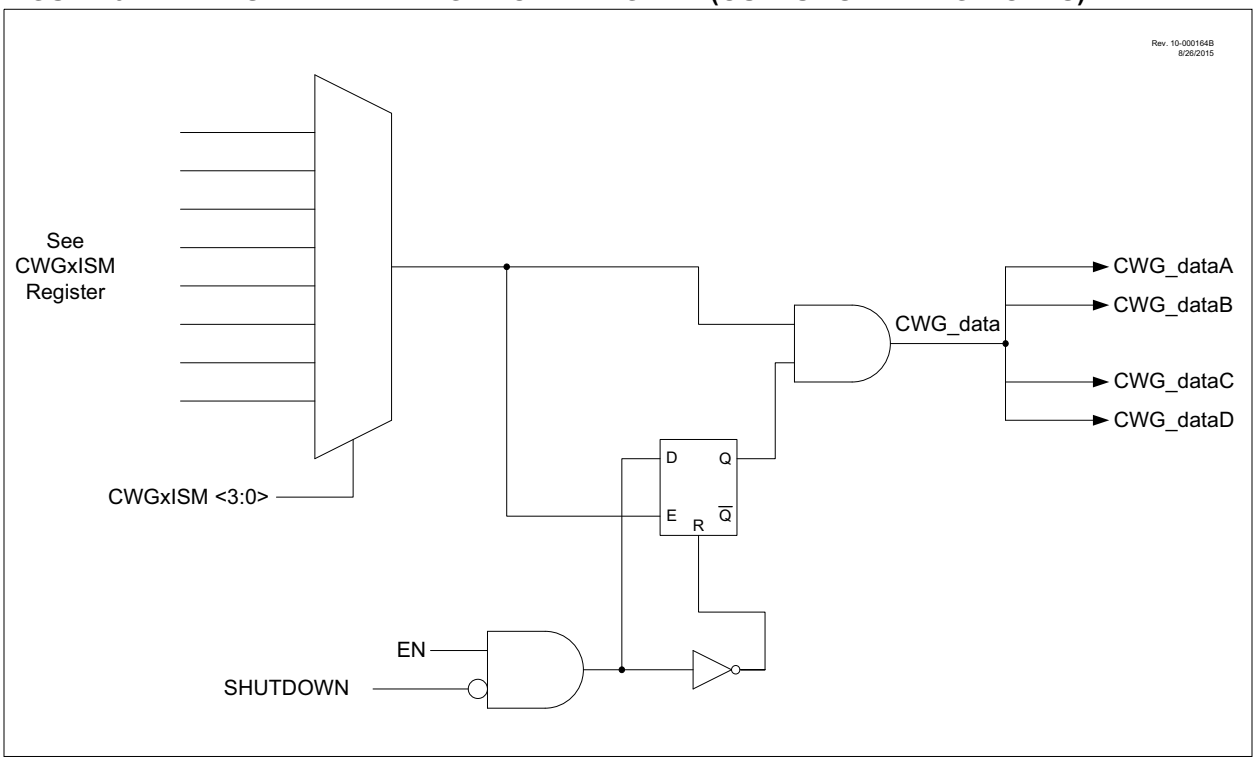

31.2 Clock Source

The CWG module allows the following clock sources to be selected:

- Fosc (system clock)
- HFINTOSC (16 MHz only)

The clock sources are selected using the CS bit of the CWG1CLKCON register.

31.3 Selectable Input Sources

The CWG generates the output waveforms from the input sources (See Register 31-9).

The input sources are selected using the CWG1ISM register.

31.4 Output Control

31.4.1 POLARITY CONTROL

The polarity of each CWG output can be selected independently. When the output polarity bit is set, the corresponding output is active-high. Clearing the output polarity bit configures the corresponding output as active-low. However, polarity does not affect the override levels. Output polarity is selected with the POLx bits of the CWG1CON1. Auto-shutdown and steering options are unaffected by polarity.

FIGURE 31-5: CWG OUTPUT BLOCK DIAGRAM

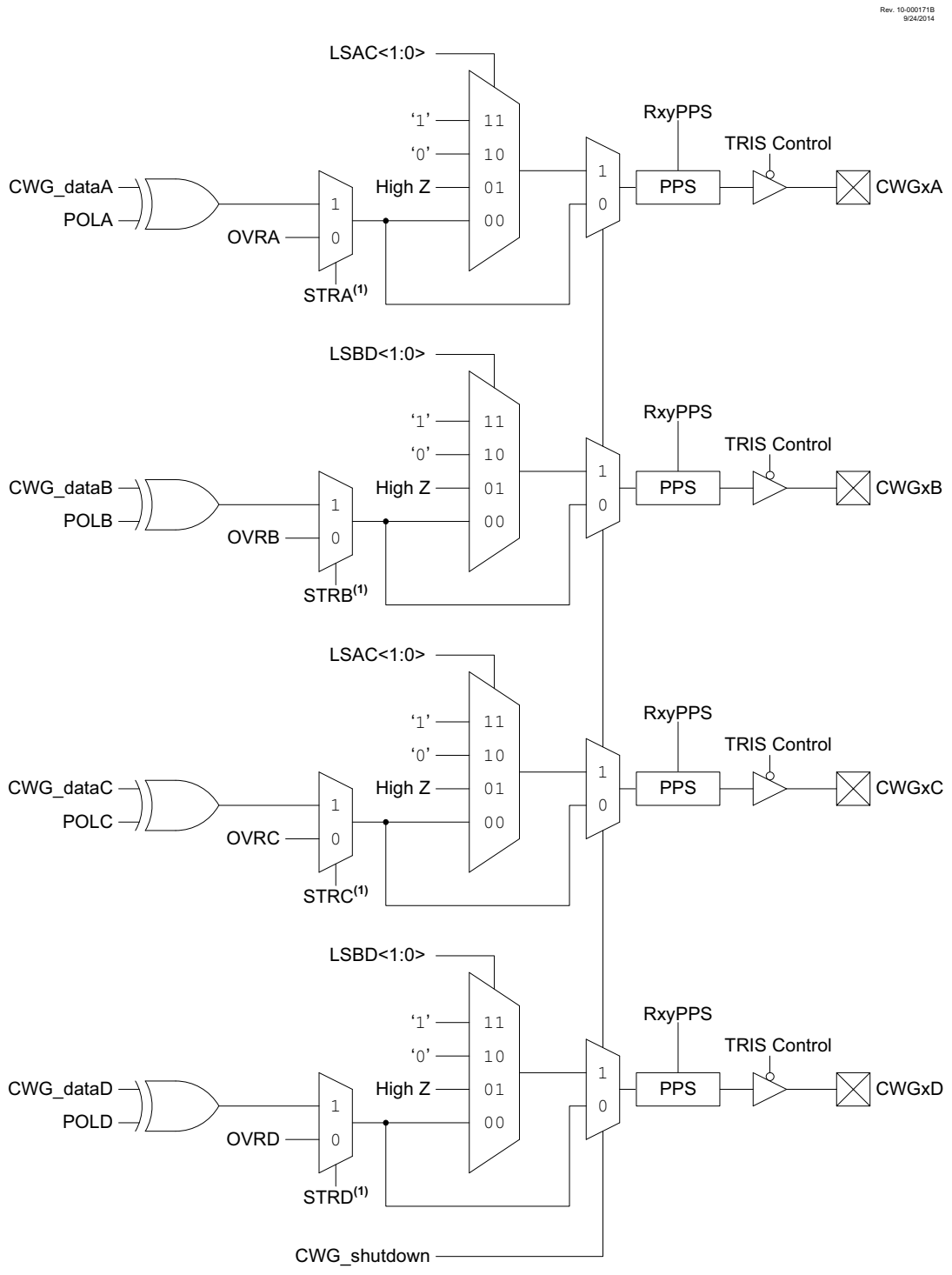

Note 1: STRx is held to 1 in all modes other than Output Steering Mode.

31.5 Dead-Band Control

The dead-band control provides non-overlapping PWM signals to prevent shoot-through current in PWM switches. Dead-band operation is employed for Half-Bridge and Full-Bridge modes. The CWG contains two 6-bit dead-band counters. One is used for the rising edge of the input source control in Half-Bridge mode or for reverse dead-band Full-Bridge mode. The other is used for the falling edge of the input source control in Half-Bridge mode or for forward dead band in Full-Bridge mode.

Dead band is timed by counting CWG clock periods from zero up to the value in the rising or falling dead-band counter registers. See CWG1DBR and CWG1DBF registers, respectively.

31.5.1 DEAD-BAND FUNCTIONALITY IN HALF-BRIDGE MODE

In Half-Bridge mode, the dead-band counters dictate the delay between the falling edge of the normal output and the rising edge of the inverted output. This can be seen in Figure 31-9.

31.5.2 DEAD-BAND FUNCTIONALITY IN FULL-BRIDGE MODE

In Full-Bridge mode, the dead-band counters are used when undergoing a direction change. The MODE<0> bit of the CWG1CON0 register can be set or cleared while the CWG is running, allowing for changes from Forward to Reverse mode. The CWG1A and CWG1C signals will change upon the first rising input edge following a direction change, but the modulated signals (CWG1B or CWG1D, depending on the direction of the change) will experience a delay dictated by the dead-band counters. This is demonstrated in Figure 31-3.

31.6 Rising Edge and Reverse Dead Band

CWG1DBR controls the rising edge dead-band time at the leading edge of CWG1A (Half-Bridge mode) or the leading edge of CWG1B (Full-Bridge mode). The CWG1DBR value is double-buffered. When EN = 0, the CWG1DBR register is loaded immediately when CWG1DBR is written. When EN = 1, then software must set the LD bit of the CWG1CON0 register, and the buffer will be loaded at the next falling edge of the CWG input signal. If the input source signal is not present for enough time for the count to be completed, no output will be seen on the respective output.

31.7 Falling Edge and Forward Dead Band

CWG1DBF controls the dead-band time at the leading edge of CWG1B (Half-Bridge mode) or the leading edge of CWG1D (Full-Bridge mode). The CWG1DBF value is double-buffered. When EN = 0, the CWG1DBF register is loaded immediately when CWG1DBF is written. When EN = 1 then software must set the LD bit of the CWG1CON0 register, and the buffer will be loaded at the next falling edge of the CWG input signal. If the input source signal is not present for enough time for the count to be completed, no output will be seen on the respective output.

Refer to Figure 31-6 and Figure 31-7 for examples.

FIGURE 31-6: DEAD-BAND OPERATION CWG1DBR = 0X01, CWG1DBF = 0X02

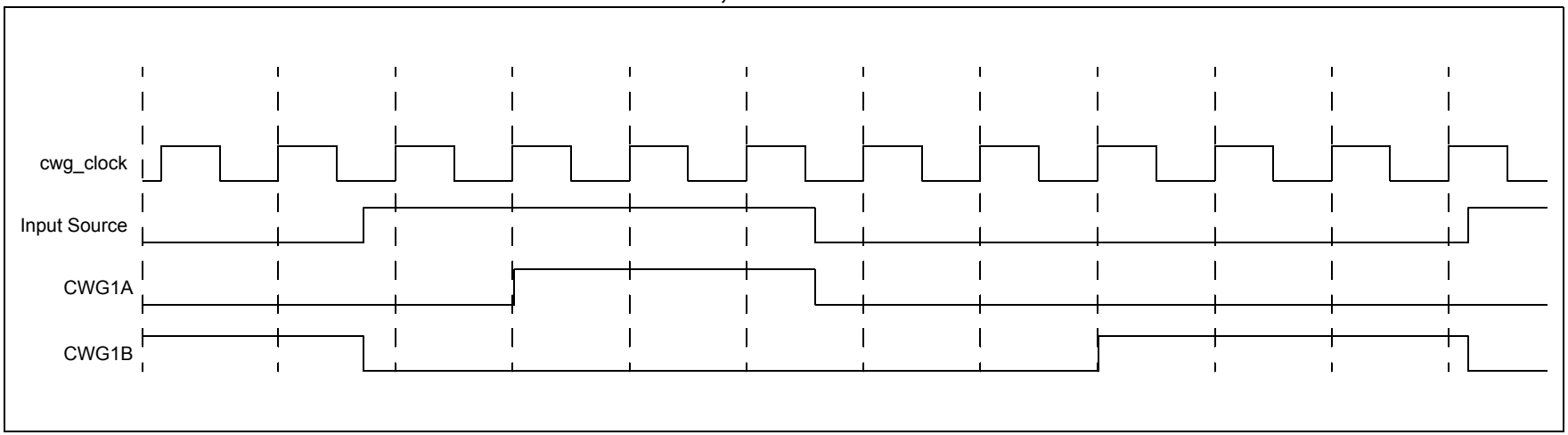

FIGURE 31-7: DEAD-BAND OPERATION, CWG1DBR = 0X03, CWG1DBF = 0X04, SOURCE SHORTER THAN DEAD BAND

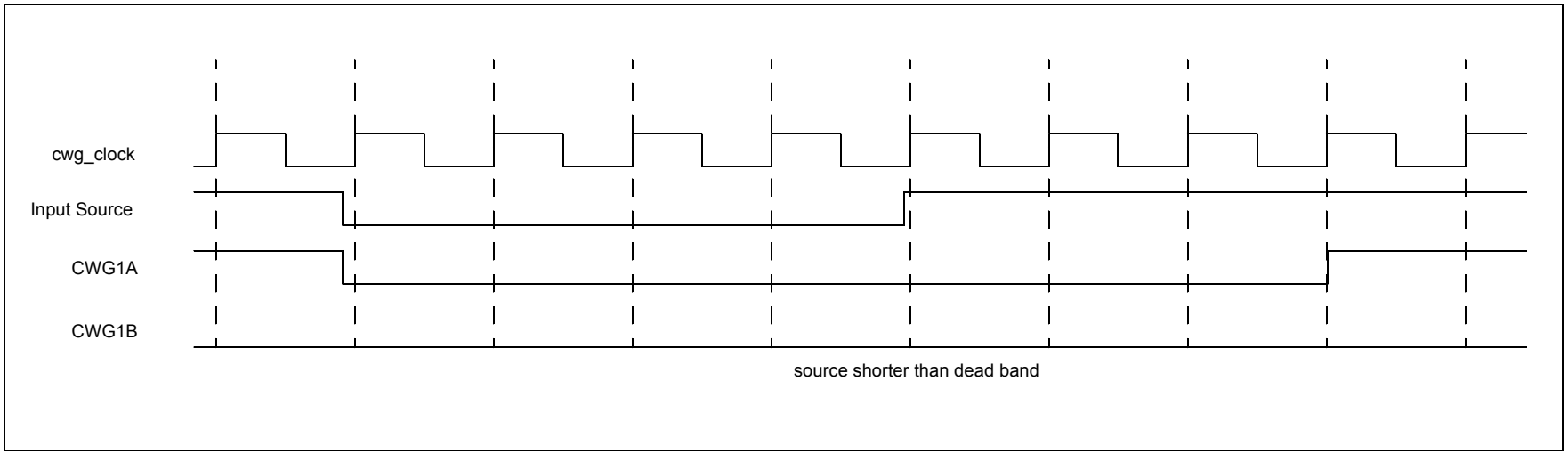

© 2017-2019 Microchip Technology Inc.

31.8 Dead-Band Uncertainty

When the rising and falling edges of the input source are asynchronous to the CWG clock, it creates uncertainty in the dead-band time delay. The maximum uncertainty is equal to one CWG clock period. Refer to Equation 31-1 for more details.

EQUATION 31-1: DEAD-BAND UNCERTAINTY

$$T_{DEADBAND_UNCERTAINTY} = \frac{1}{Fcwg_clock}$$

Example:

$FCWG_CLOCK = 16\ MHz$

Therefore:

$$T_{DEADBAND_UNCERTAINTY} = \frac{1}{Fcwg_clock} = \frac{1}{16MHz} = 62.5ns$$

FIGURE 31-8: EXAMPLE OF PWM DIRECTION CHANGE

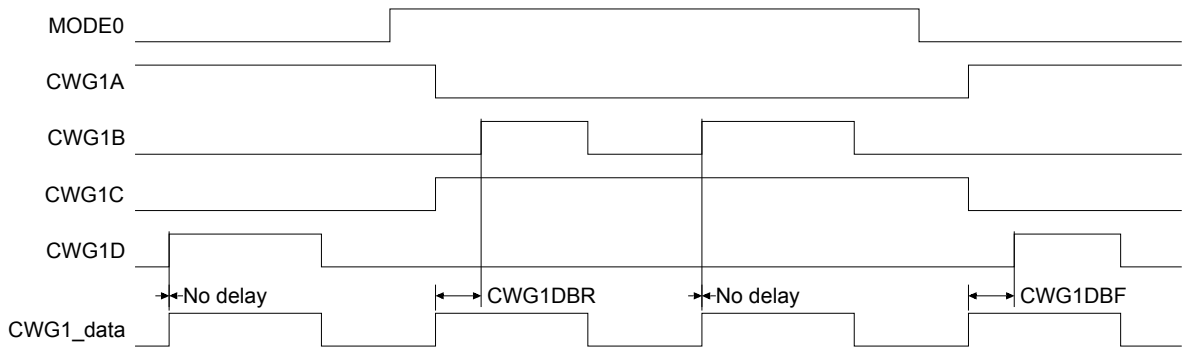

Note 1: WGPOL{ABCD} = 0
2: The direction bit MODE<0> (Register 31-1) can be written any time during the PWM cycle, and takes effect at the next rising CWG1_data.
3: When changing directions, CWG1A and CWG1C switch at rising CWG1_data; modulated CWG1B and CWG1D are held inactive for the dead band duration

FIGURE 31-9: CWG HALF-BRIDGE MODE OPERATION

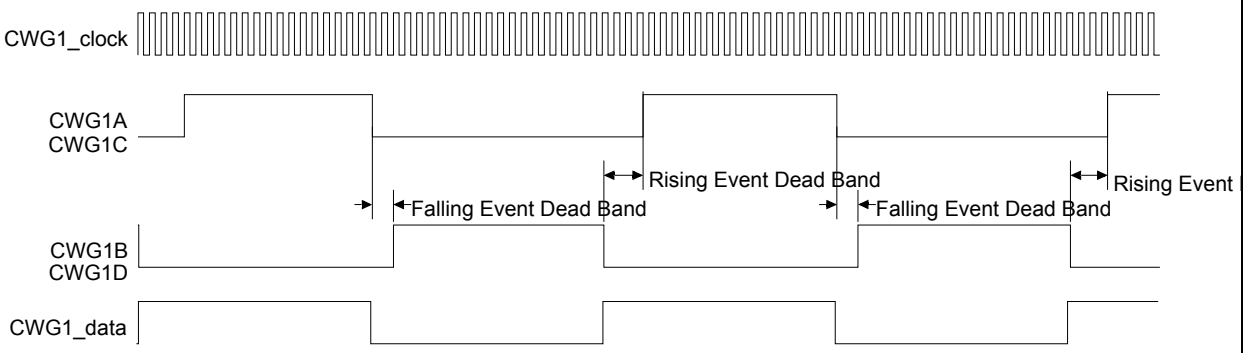

Note: CWG1_rising_src = CCP1_out, CWG1_falling_src = ~CCP1_out

31.9 CWG Steering Mode

In Steering mode (MODE = 00x), the CWG allows any combination of the CWG1x pins to be the modulated signal. The same signal can be simultaneously available on multiple pins, or a fixed-value output can be presented.

When the respective STRx bit of CWG1OCON0 is '0', the corresponding pin is held at the level defined. When the respective STRx bit of CWG1OCON0 is '1', the pin is driven by the input data signal. The user can assign the input data signal to one, two, three, or all four output pins.

The POLx bits of the CWG1CON1 register control the signal polarity only when STRx = 1.

The CWG auto-shutdown operation also applies in Steering modes as described in **Section 31.10 "Auto-Shutdown"**. An auto-shutdown event will only affect pins that have STRx = 1.

31.9.1 STEERING SYNCHRONIZATION

Changing the MODE bits allows for two modes of steering, synchronous and asynchronous.

When MODE = 000, the steering event is asynchronous and will happen at the end of the instruction that writes to STRx (that is, immediately). In this case, the output signal at the output pin may be an incomplete waveform. This can be useful for immediately removing a signal from the pin.

When MODE = 001, the steering update is synchronous and occurs at the beginning of the next rising edge of the input data signal. In this case, steering the output on/off will always produce a complete waveform.

Figure 31-10 and Figure 31-11 illustrate the timing of asynchronous and synchronous steering, respectively.

FIGURE 31-10: EXAMPLE OF ASYNCHRONOUS STEERING EVENT (MODE<2:0> = 000)

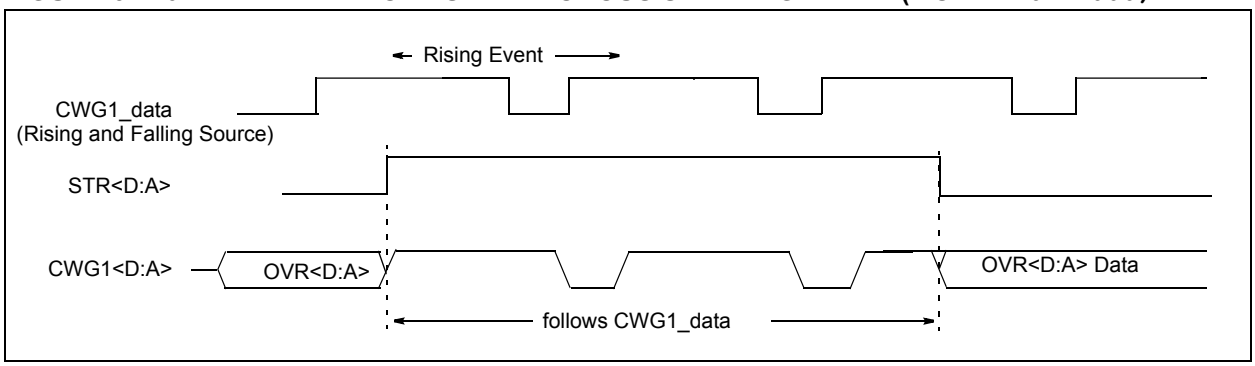

FIGURE 31-11: EXAMPLE OF STEERING EVENT (MODE<2:0> = 001)

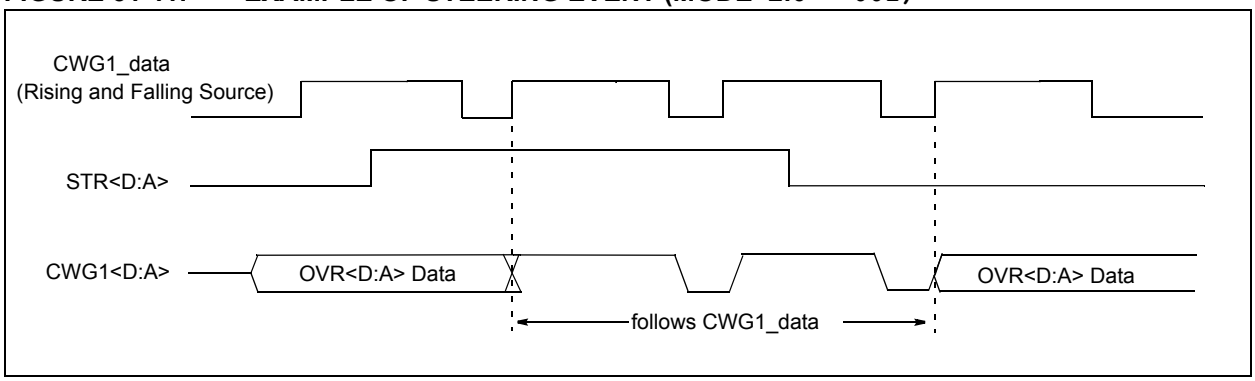

31.10 Auto-Shutdown

Auto-shutdown is a method to immediately override the CWG output levels with specific overrides that allow for safe shutdown of the circuit. The shutdown state can be either cleared automatically or held until cleared by software. The auto-shutdown circuit is illustrated in Figure 31-12.

31.10.1 SHUTDOWN

The shutdown state can be entered by either of the following two methods:

- Software generated
- External input

31.10.1.1 Software Generated Shutdown

Setting the SHUTDOWN bit of the CWG1AS0 register will force the CWG into the shutdown state.

When the auto-restart is disabled, the shutdown state will persist as long as the SHUTDOWN bit is set.

When auto-restart is enabled, the SHUTDOWN bit will clear automatically and resume operation on the next rising edge event.

31.10.2 EXTERNAL INPUT SOURCE

External shutdown inputs provide the fastest way to safely suspend CWG operation in the event of a Fault condition. When any of the selected shutdown inputs goes active, the CWG outputs will immediately go to the selected override levels without software delay. Several input sources can be selected to cause a shutdown condition. All input sources are active-low. The sources are:

- Comparator C1OUT_sync
- Comparator C2OUT_sync
- Timer2 – TMR2_postscaled
- CWG1IN input pin

Shutdown inputs are selected using the CWG1AS1 register (Register 31-6).

Note:	Shutdown inputs are level sensitive, not edge sensitive. The shutdown state cannot be cleared, except by disabling auto-shutdown, as long as the shutdown input level persists.

31.11 Operation During Sleep

The CWG module operates independently from the system clock and will continue to run during Sleep, provided that the clock and input sources selected remain active.

The HFINTOSC remains active during Sleep when all the following conditions are met:

- CWG module is enabled
- Input source is active
- HFINTOSC is selected as the clock source, regardless of the system clock source selected.

In other words, if the HFINTOSC is simultaneously selected as the system clock and the CWG clock source, when the CWG is enabled and the input source is active, then the CPU will go idle during Sleep, but the HFINTOSC will remain active and the CWG will continue to operate. This will have a direct effect on the Sleep mode current.

FIGURE 31-12: CWG SHUTDOWN BLOCK DIAGRAM

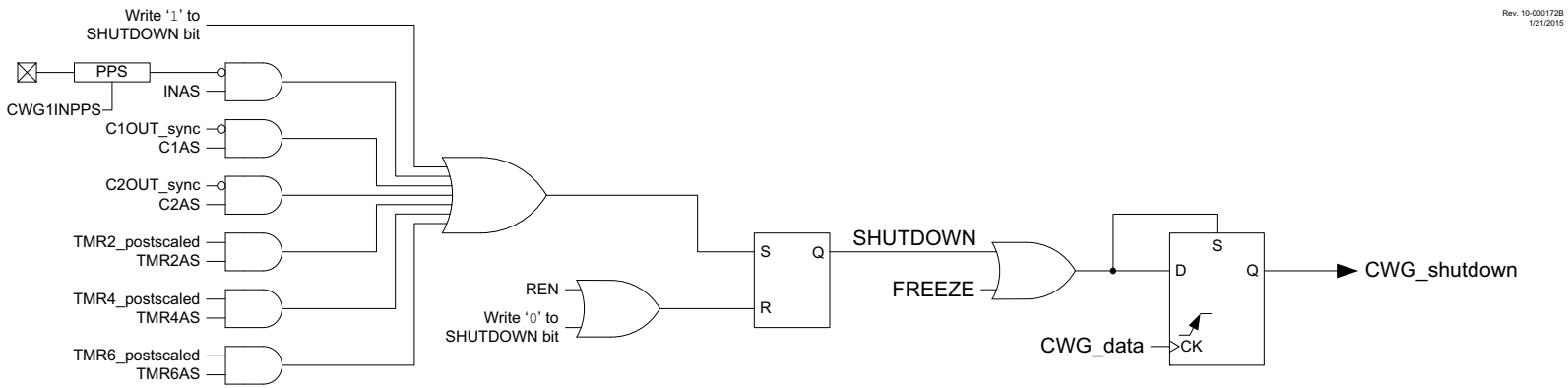

31.12 Configuring the CWG

The following steps illustrate how to properly configure the CWG.

1. Ensure that the TRIS control bits corresponding to the desired CWG pins for your application are set so that the pins are configured as inputs.
2. Clear the EN bit, if not already cleared.
3. Set desired mode of operation with the MODE bits.
4. Set desired dead-band times, if applicable to mode, with the CWG1DBR and CWG1DBF registers.
5. Setup the following controls in the CWG1AS0 and CWG1AS1 registers.
   a. Select the desired shutdown source.
   b. Select both output overrides to the desired levels (this is necessary even if not using auto-shutdown because start-up will be from a shutdown state).
   c. Set which pins will be affected by auto-shutdown with the CWG1AS1 register.
   d. Set the SHUTDOWN bit and clear the REN bit.
6. Select the desired input source using the CWG1ISM register.
7. Configure the following controls.
   a. Select desired clock source using the CWG1CLKCON register.
   b. Select the desired output polarities using the CWG1CON1 register.
   c. Set the output enables for the desired outputs.
8. Set the EN bit.
9. Clear TRIS control bits corresponding to the desired output pins to configure these pins as outputs.
10. If auto-restart is to be used, set the REN bit and the SHUTDOWN bit will be cleared automatically. Otherwise, clear the SHUTDOWN bit to start the CWG.

31.12.1 PIN OVERRIDE LEVELS

The levels driven to the output pins, while the shutdown input is true, are controlled by the LSBD and LSAC bits of the CWG1AS0 register. LSBD<1:0> controls the CWG1B and D override levels and LSAC<1:0> controls the CWG1A and C override levels. The control bit logic level corresponds to the output logic drive level while in the shutdown state. The polarity control does not affect the override level.

31.12.2 AUTO-SHUTDOWN RESTART

After an auto-shutdown event has occurred, there are two ways to resume operation:

- Software controlled
- Auto-restart

The restart method is selected with the REN bit of the CWG1CON2 register. Waveforms of software controlled and automatic restarts are shown in Figure 31-13 and Figure 31-14.

31.12.2.1 Software Controlled Restart

When the REN bit of the CWG1AS0 register is cleared, the CWG must be restarted after an auto-shutdown event by software. Clearing the shutdown state requires all selected shutdown inputs to be low, otherwise the SHUTDOWN bit will remain set. The overrides will remain in effect until the first rising edge event after the SHUTDOWN bit is cleared. The CWG will then resume operation.

31.12.2.2 Auto-Restart

When the REN bit of the CWG1CON2 register is set, the CWG will restart from the auto-shutdown state automatically. The SHUTDOWN bit will clear automatically when all shutdown sources go low. The overrides will remain in effect until the first rising edge event after the SHUTDOWN bit is cleared. The CWG will then resume operation.

FIGURE 31-13: SHUTDOWN FUNCTIONALITY, AUTO-RESTART DISABLED (REN = 0, LSAC = 01, LSBD = 01)

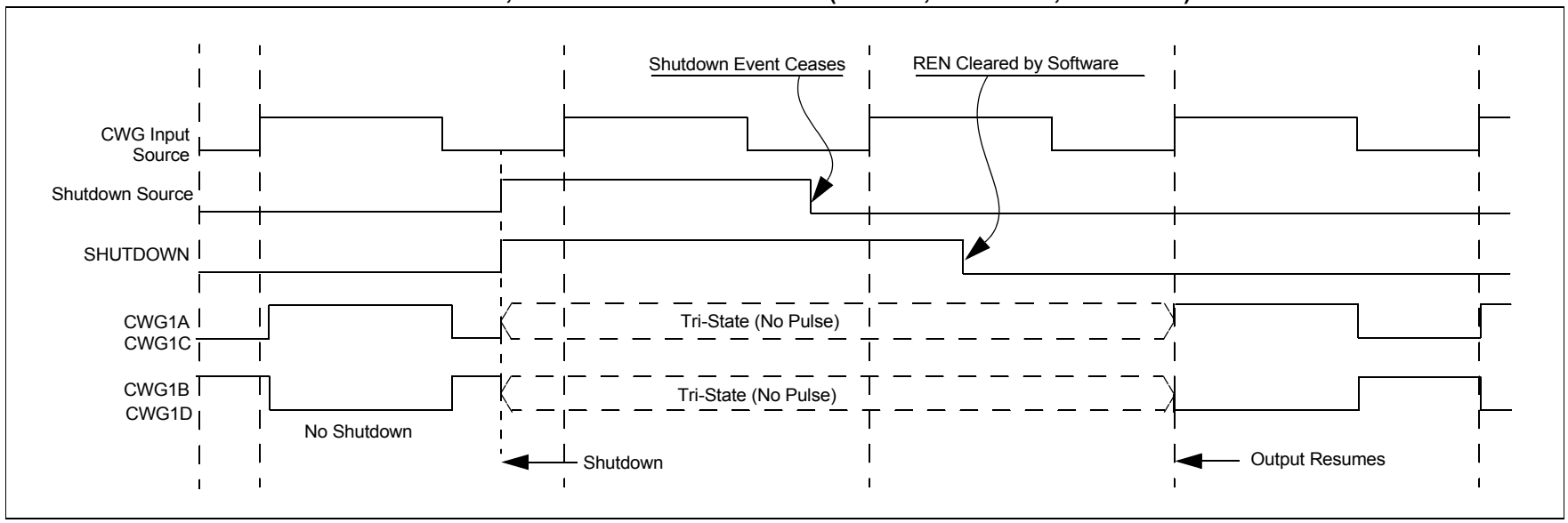

FIGURE 31-14: SHUTDOWN FUNCTIONALITY, AUTO-RESTART ENABLED (REN = 1, LSAC = 01, LSBD = 01)

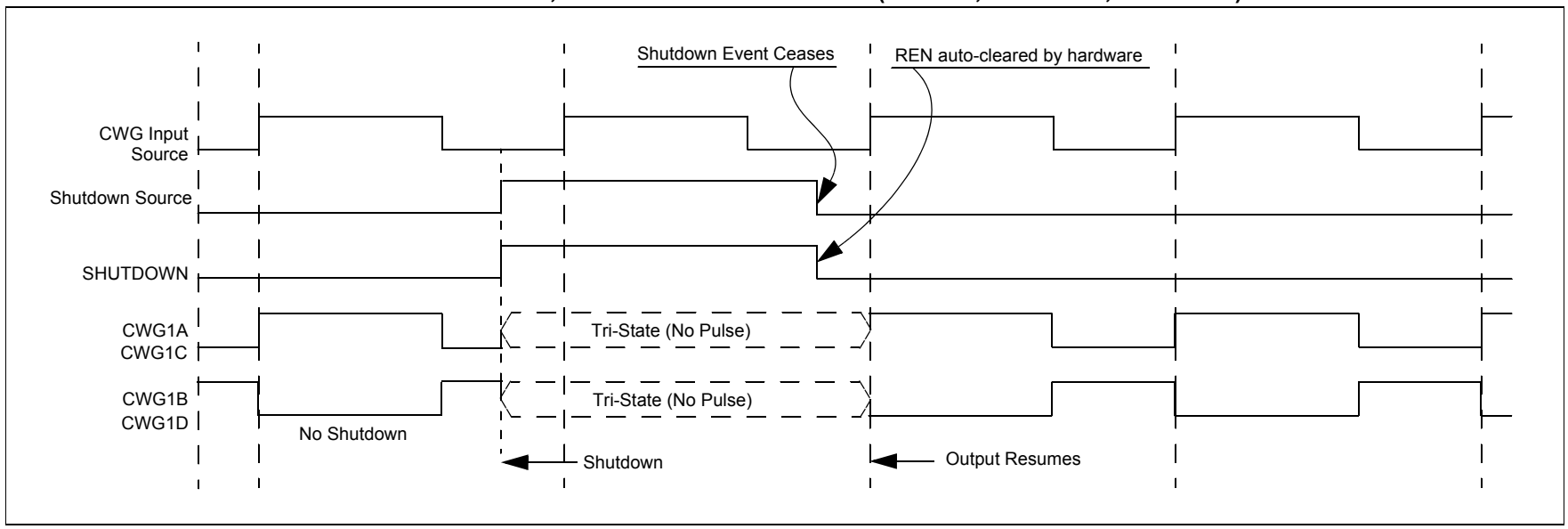

© 2017-2019 Microchip Technology Inc.

31.13 Register Definitions: CWG Control

Long bit name prefixes for the CWG peripherals are shown in **Section 1.1 "Register and Bit Naming Conventions"**.

REGISTER 31-1: CWG1CON0: CWG1 CONTROL REGISTER 0

R/W-0/0	R/W/HC-0/0	U-0	U-0	U-0	R/W-0/0	R/W-0/0	R/W-0/0
EN	LD(1)	—	—	—	MODE<2:0>		
bit 7							bit 0

Legend:		
HC = Bit is cleared by hardware		HS = Bit is set by hardware
R = Readable bit	W = Writable bit	U = Unimplemented bit, read as '0'
u = Bit is unchanged	x = Bit is unknown	-n/n = Value at POR and BOR/Value at all other Resets
'1' = Bit is set	'0' = Bit is cleared	q = Value depends on condition

bit 7 **EN:** CWG1 Enable bit
1 = Module is enabled
0 = Module is disabled

bit 6 **LD:** CWG1 Load Buffer bits(1)
1 = Buffers to be loaded on the next rising/falling event
0 = Buffers not loaded

bit 5-3 **Unimplemented**: Read as '0'

bit 2-0 **MODE<2:0>:** CWG1 Mode bits
111 = Reserved
110 = Reserved
101 = CWG outputs operate in Push-Pull mode
100 = CWG outputs operate in Half-Bridge mode
011 = CWG outputs operate in Reverse Full-Bridge mode
010 = CWG outputs operate in Forward Full-Bridge mode
001 = CWG outputs operate in Synchronous Steering mode
000 = CWG outputs operate in Steering mode

Note 1: This bit can only be set after EN = 1 and cannot be set in the same instruction that EN is set.

REGISTER 31-2: CWG1CON1: CWG1 CONTROL REGISTER 1

U-0	U-0	R-x	U-0	R/W-0/0	R/W-0/0	R/W-0/0	R/W-0/0
—	—	IN	—	POLD	POLC	POLB	POLA
bit 7							bit 0

Legend:		
R = Readable bit	W = Writable bit	U = Unimplemented bit, read as ‘0’
u = Bit is unchanged	x = Bit is unknown	-n/n = Value at POR and BOR/Value at all other Resets
‘1’ = Bit is set	‘0’ = Bit is cleared	q = Value depends on condition

bit 7-6 **Unimplemented:** Read as ‘0’

bit 5 **IN:** CWG Input Value bit

bit 4 **Unimplemented:** Read as ‘0’

bit 3 **POLD:** CWG1D Output Polarity bit
1 = Signal output is inverted polarity
0 = Signal output is normal polarity

bit 2 **POLC:** CWG1C Output Polarity bit
1 = Signal output is inverted polarity
0 = Signal output is normal polarity

bit 1 **POLB:** CWG1B Output Polarity bit
1 = Signal output is inverted polarity
0 = Signal output is normal polarity

bit 0 **POLA:** CWG1A Output Polarity bit
1 = Signal output is inverted polarity
0 = Signal output is normal polarity

REGISTER 31-3: CWG1DBR: CWG1 RISING DEAD-BAND COUNTER REGISTER

U-0	U-0	R/W-x/u	R/W-x/u	R/W-x/u	R/W-x/u	R/W-x/u	R/W-x/u
—	—	DBR<5:0>					
bit 7							bit 0

Legend:		
R = Readable bit	W = Writable bit	U = Unimplemented bit, read as ‘0’
u = Bit is unchanged	x = Bit is unknown	-n/n = Value at POR and BOR/Value at all other Resets
‘1’ = Bit is set	‘0’ = Bit is cleared	q = Value depends on condition

bit 7-6 **Unimplemented:** Read as ‘0’

bit 5-0 **DBR<5:0>:** Rising Event Dead-Band Value for Counter bits

REGISTER 31-4: CWG1DBF: CWG1 FALLING DEAD-BAND COUNTER REGISTER

U-0	U-0	R/W-x/u	R/W-x/u	R/W-x/u	R/W-x/u	R/W-x/u	R/W-x/u
—	—	DBF<5:0>					
bit 7							bit 0

Legend:		
R = Readable bit	W = Writable bit	U = Unimplemented bit, read as ‘0’
u = Bit is unchanged	x = Bit is unknown	-n/n = Value at POR and BOR/Value at all other Resets
‘1’ = Bit is set	‘0’ = Bit is cleared	q = Value depends on condition

bit 7-6 **Unimplemented:** Read as ‘0’

bit 5-0 **DBF<5:0>:** Falling Event Dead-Band Value for Counter bits

REGISTER 31-5: CWG1AS0: CWG1 AUTO-SHUTDOWN CONTROL REGISTER 0

R/W/HS-0/0	R/W-0/0	R/W-0/0	R/W-1/1	R/W-0/0	R/W-1/1	U-0	U-0
SHUTDOWN(1, 2)	REN	LSBD<1:0>		LSAC<1:0>		—	—
bit 7							bit 0

Legend:		
HC = Bit is cleared by hardware		HS = Bit is set by hardware
R = Readable bit	W = Writable bit	U = Unimplemented bit, read as ‘0’
u = Bit is unchanged	x = Bit is unknown	-n/n = Value at POR and BOR/Value at all other Resets
‘1’ = Bit is set	‘0’ = Bit is cleared	q = Value depends on condition

bit 7 **SHUTDOWN:** Auto-Shutdown Event Status bit(1, 2)
- 1 = An Auto-Shutdown state is in effect
- 0 = No Auto-shutdown event has occurred

bit 6 **REN:** Auto-Restart Enable bit
- 1 = Auto-restart enabled
- 0 = Auto-restart disabled

bit 5-4 **LSBD<1:0>:** CWG1B and CWG1D Auto-Shutdown State Control bits
- 11 =A logic ‘1’ is placed on CWG1B/D when an auto-shutdown event is present
- 10 =A logic ‘0’ is placed on CWG1B/D when an auto-shutdown event is present
- 01 =Pin is tri-stated on CWG1B/D when an auto-shutdown event is present
- 00 =The inactive state of the pin, including polarity, is placed on CWG1B/D after the required dead-band interval

bit 3-2 **LSAC<1:0>:** CWG1A and CWG1C Auto-Shutdown State Control bits
- 11 =A logic ‘1’ is placed on CWG1A/C when an auto-shutdown event is present
- 10 =A logic ‘0’ is placed on CWG1A/C when an auto-shutdown event is present
- 01 =Pin is tri-stated on CWG1A/C when an auto-shutdown event is present
- 00 =The inactive state of the pin, including polarity, is placed on CWG1A/C after the required dead-band interval

bit 1-0 **Unimplemented:** Read as ‘0’

Note 1: This bit may be written while EN = 0 (CWG1CON0 register) to place the outputs into the shutdown configuration.

2: The outputs will remain in auto-shutdown state until the next rising edge of the input signal after this bit is cleared.

REGISTER 31-6: CWG1AS1: CWG1 AUTO-SHUTDOWN CONTROL REGISTER 1

U-1	U-1	U-1	R/W-0/0	R/W-0/0	R/W-0/0	R/W-0/0	R/W-0/0
—	—	—	AS4E	AS3E	AS2E	AS1E	AS0E
bit 7							bit 0

Legend:		
R = Readable bit	W = Writable bit	U = Unimplemented bit, read as ‘0’
u = Bit is unchanged	x = Bit is unknown	-n/n = Value at POR and BOR/Value at all other Resets
‘1’ = Bit is set	‘0’ = Bit is cleared	q = Value depends on condition

bit 7-5 **Unimplemented:** Read as ‘0’

bit 4 **AS4E:** CLC2 Output bit
1 = LC2_out shut-down is enabled
0 = LC2_out shut-down is disabled

bit 3 **AS3E:** Comparator C2 Output bit
1 = C2 output shut-down is enabled
0 = C2 output shut-down is disabled

bit 2 **AS2E:** Comparator C1 Output bit
1 = C1 output shut-down is enabled
0 = C1 output shut-down is disabled

bit 2 **AS1E:** TMR2 Postscale Output bit
1 = TMR2 Postscale shut-down is enabled
0 = TMR2 Postscale shut-down is disabled

bit 0 **AS0E:** CWG1 Input Pin bit
1 = Input pin selected by CWG1PPS shut-down is enabled
0 = Input pin selected by CWG1PPS shut-down is disabled

REGISTER 31-7: CWG1STR: CWG1 STEERING CONTROL REGISTER(1)

R/W-0/0	R/W-0/0	R/W-0/0	R/W-0/0	R/W-0/0	R/W-0/0	R/W-0/0	R/W-0/0
OVRD	OVRC	OVRB	OVRA	STRD(2)	STRC(2)	STRB(2)	STRA(2)
bit 7							bit 0

Legend:		
R = Readable bit	W = Writable bit	U = Unimplemented bit, read as ‘0’
u = Bit is unchanged	x = Bit is unknown	-n/n = Value at POR and BOR/Value at all other Resets
‘1’ = Bit is set	‘0’ = Bit is cleared	q = Value depends on condition

bit 7 **OVRD:** Steering Data D bit

bit 6 **OVRC:** Steering Data C bit

bit 5 **OVRB:** Steering Data B bit

bit 4 **OVRA:** Steering Data A bit

bit 3 **STRD:** Steering Enable D bit(2)

`1` = CWG1D output has the CWG1_data waveform with polarity control from POLD bit
`0` = CWG1D output is assigned the value of OVRD bit

bit 2 **STRC:** Steering Enable C bit(2)

`1` = CWG1C output has the CWG1_data waveform with polarity control from POLC bit
`0` = CWG1C output is assigned the value of OVRC bit

bit 1 **STRB:** Steering Enable B bit(2)

`1` = CWG1B output has the CWG1_data waveform with polarity control from POLB bit
`0` = CWG1B output is assigned the value of OVRB bit

bit 0 **STRA:** Steering Enable A bit(2)

`1` = CWG1A output has the CWG1_data waveform with polarity control from POLA bit
`0` = CWG1A output is assigned the value of OVRA bit

Note 1: The bits in this register apply only when MODE<2:0> = `00x`.

2: This bit is effectively double-buffered when MODE<2:0> = `001`.

REGISTER 31-8: CWG1CLK: CWG1 CLOCK SELECTION REGISTER

U-0	U-0	U-0	U-0	U-0	U-0	U-0	R/W-0/0
—	—	—	—	—	—	—	CS
bit 7							bit 0

Legend:		
R = Readable bit	W = Writable bit	U = Unimplemented bit, read as ‘0’
u = Bit is unchanged	x = Bit is unknown	-n/n = Value at POR and BOR/Value at all other Resets
‘1’ = Bit is set	‘0’ = Bit is cleared	q = Value depends on condition

bit 7-1 **Unimplemented:** Read as ‘0’

bit 0 **CS:** CWG1 Clock Selection bit
1 = HFINTOSC 16 MHz is selected
0 = FOSC is selected

REGISTER 31-9: CWG1ISM: CWG1 INPUT SELECTION REGISTER

U-0	U-0	U-0	U-0	R/W-0/0	R/W-0/0	R/W-0/0	R/W-0/0
—	—	—	—	IS<3:0>			
bit 7							bit 0

Legend:		
R = Readable bit	W = Writable bit	U = Unimplemented bit, read as ‘0’
u = Bit is unchanged	x = Bit is unknown	-n/n = Value at POR and BOR/Value at all other Resets
‘1’ = Bit is set	‘0’ = Bit is cleared	q = Value depends on condition

bit 7-4 **Unimplemented:** Read as ‘0’

bit 3-0 **IS<3:0>:** CWG1 Input Selection bits
1011-1111 = Reserved. No channel connected.
1010 = LC4_out
1001 = LC3_out
1000 = LC2_out
0111 = LC1_out
0110 = Comparator C2 out
0101 = Comparator C1 out
0100 = PWM4_out
0011 = PWM3_out
0010 = CCP2_out
0001 = CCP1_out
0000 = CWG11CLK

TABLE 31-2: SUMMARY OF REGISTERS ASSOCIATED WITH CWG

Name	Bit 7	Bit 6	Bit 5	Bit 4	Bit 3	Bit 2	Bit 1	Bit 0	Register on Page
CWG1CLKCON	—	—	—	—	—	—	—	CS	493
CWG1ISM	—	—	—	—	IS<3:0>				493
CWG1DBR	—	—	DBR<5:0>						489
CWG1DBF	—	—	DBF<5:0>						489
CWG1CON0	EN	LD	—	—	—	MODE<2:0>			487
CWG1CON1	—	—	IN	—	POLD	POLC	POLB	POLA	488
CWG1AS0	SHUTDOWN	REN	LSBD<1:0>		LSAC<1:0>		—	—	490
CWG1AS1	—	—	—	AS4E	AS3E	AS2E	AS1E	AS0E	491
CWG1STR	OVRD	OVRC	OVRB	OVRA	STRD	STRC	STRB	STRA	492
INTCON	GIE	PEIE	—	—	—	—	—	INTEDG	164
PIE7	—	—	NVMIE	—	—	—	—	CWG1IE	172
PIR7	—	—	NVMIF	—	—	—	—	CWG1IF	181

Legend: – = unimplemented locations read as ‘0’. Shaded cells are not used by CWG.

32.0 CONFIGURABLE LOGIC CELL (CLC)

The Configurable Logic Cell (CLCx) module provides programmable logic that operates outside the speed limitations of software execution. The logic cell selects from 40 input signals and, through the use of configurable gates, reduces the inputs to four logic lines that drive one of eight selectable single-output logic functions.

Input sources are a combination of the following:

- I/O pins
- Internal clocks
- Peripherals
- Register bits

The output can be directed internally to peripherals and to an output pin.

The CLC modules available are shown in Table 32-1.

TABLE 32-1: AVAILABLE CLC MODULES

Device	CLC1	CLC2	CLC3	CLC4
PIC16(L)F19155/56/75/76/85/86	●	●	●	●

Note: The CLC1, CLC2, CLC3 and CLC4 are four separate module instances of the same CLC module design. Throughout this section, the lower case ‘x’ in register and bit names is a generic reference to the CLC number (which should be substituted with 1, 2, 3, or 4 during code development). For example, the control register is generically described in this chapter as CLCxCON, but the actual device registers are CLC1CON, CLC2CON, CLC3CON and CLC4CON. Similarly, the LCxEN bit represents the LC1EN, LC2EN, LC3EN and LC4EN bits.

Refer to Figure 32-1 for a simplified diagram showing signal flow through the CLCx.

Possible configurations include:

- Combinatorial Logic
  - AND
  - NAND
  - AND-OR
  - AND-OR-INVERT
  - OR-XOR
  - OR-XNOR
- Latches
  - S-R
  - Clocked D with Set and Reset
  - Transparent D with Set and Reset
  - Clocked J-K with Reset

FIGURE 32-1: CLCx SIMPLIFIED BLOCK DIAGRAM

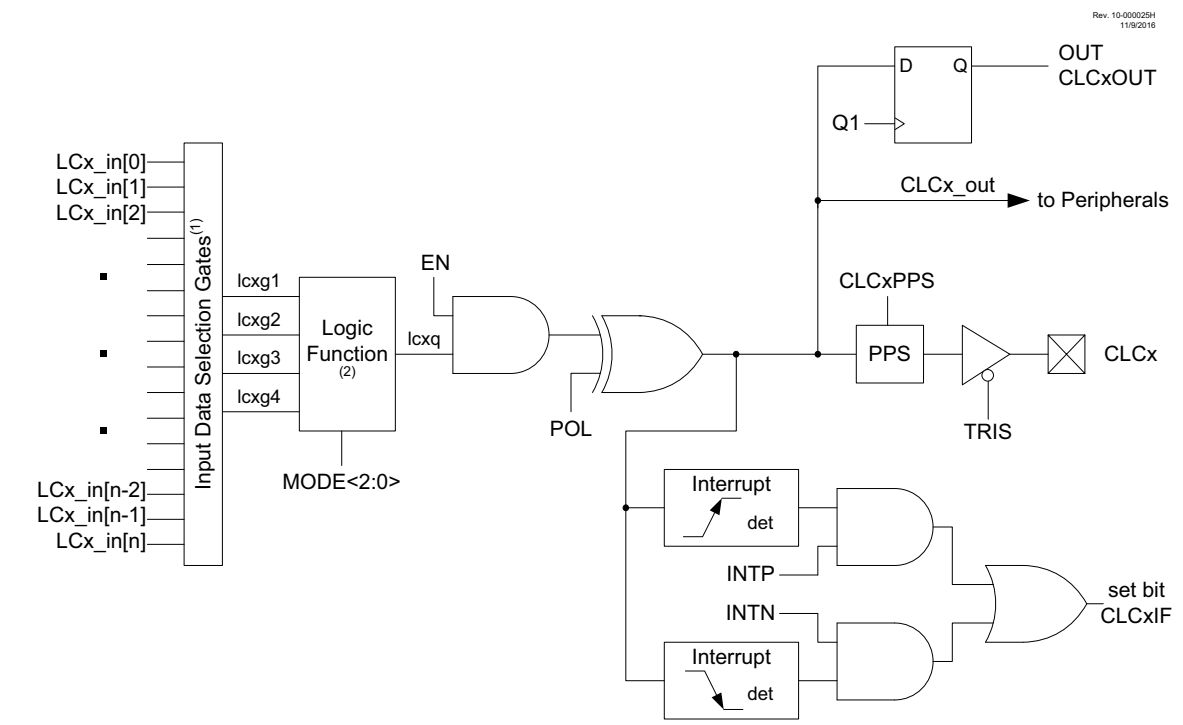

Note 1: See Figure 32-2: Input Data Selection and Gating

2: See Figure 32-3: Programmable Logic Functions

32.1 CLCx Setup

Programming the CLCx module is performed by configuring the four stages in the logic signal flow. The four stages are:

- Data selection
- Data gating
- Logic function selection
- Output polarity

Each stage is setup at run time by writing to the corresponding CLCx Special Function Registers. This has the added advantage of permitting logic reconfiguration on-the-fly during program execution.

32.1.1 DATA SELECTION

There are 40 signals available as inputs to the configurable logic. Four 40-input multiplexers are used to select the inputs to pass on to the next stage.

Data selection is through four multiplexers as indicated on the left side of Figure 32-2. Data inputs in the figure are identified by a generic numbered input name.

Table 32-2 correlates the generic input name to the actual signal for each CLC module. The column labeled 'LCxDyS<5:0> Value' indicates the MUX selection code for the selected data input. LCxDyS is an abbreviation to identify specific multiplexers: LCxD1S<5:0> through LCxD4S<5:0>.

Data inputs are selected with CLCxSEL0 through CLCxSEL3 registers (Register 32-3 through Register 32-6).

TABLE 32-2: CLCx DATA INPUT SELECTION

LCxDyS<5:0> Value	CLCx Input Source
100101 to 111111	Reserved
100100	EUSART2 (TX/CK) output
100011	EUSART2 (DT) output
100010	CWG1B output
100001	CWG1A output
100000	RTCC seconds
011111	MSSP1 SCK output
011110	MSSP1 SDO output
011101	EUSART1 (TX/CK) output
011100	EUSART1 (DT) output
011011	CLC4 output
011010	CLC3 output
011001	CLC2 output
011000	CLC1 output
010111	IOCIF
010110	ZCD output
010101	C2OUT
010100	C1OUT
010011	PWM4 output
010010	PWM3 output
010001	CCP2 output
010000	CCP1 output
001111	SMT overflow
001110	Timer4 overflow
001101	Timer2 overflow
001100	Timer1 overflow
001011	Timer0 overflow
001010	ADCRC
001001	SOSC
001000	MFINTOSC/16 (31.25 kHz)
000111	MFINTOSC (500 kHz)
000110	LFINTOSC
000101	HFINTOSC
000100	FOSC
000011	CLCIN3PPS
000010	CLCIN2PPS
000001	CLCIN1PPS
000000	CLCIN0PPS

32.1.2 DATA GATING

Outputs from the input multiplexers are directed to the desired logic function input through the data gating stage. Each data gate can direct any combination of the four selected inputs.

Note: Data gating is undefined at power-up.

The gate stage is more than just signal direction. The gate can be configured to direct each input signal as inverted or non-inverted data. The output of each gate can be inverted before going on to the logic function stage.

The gating is in essence a 1-to-4 input AND/NAND/OR/NOR gate. When every input is inverted and the output is inverted, the gate is an OR of all enabled data inputs. When the inputs and output are not inverted, the gate is an AND or all enabled inputs.

Table 32-3 summarizes the basic logic that can be obtained in gate 1 by using the gate logic select bits. The table shows the logic of four input variables, but each gate can be configured to use less than four. If no inputs are selected, the output will be zero or one, depending on the gate output polarity bit.

TABLE 32-3: DATA GATING LOGIC EXAMPLES

CLCxGLSy	LCxGyPOL	Gate Logic
0x55	1	4-input AND
0x55	0	4-input NAND
0xAA	1	4-input NOR
0xAA	0	4-input OR
0x00	0	Logic 0
0x00	1	Logic 1

It is possible (but not recommended) to select both the true and negated values of an input. When this is done, the gate output is zero, regardless of the other inputs, but may emit logic glitches (transient-induced pulses). If the output of the channel must be zero or one, the recommended method is to set all gate bits to zero and use the gate polarity bit to set the desired level.

Data gating is configured with the logic gate select registers as follows:

- Gate 1: CLCxGLS0 (Register 32-7)
- Gate 2: CLCxGLS1 (Register 32-8)
- Gate 3: CLCxGLS2 (Register 32-9)
- Gate 4: CLCxGLS3 (Register 32-10)

Register number suffixes are different than the gate numbers because other variations of this module have multiple gate selections in the same register.

Data gating is indicated in the right side of Figure 32-2. Only one gate is shown in detail. The remaining three gates are configured identically with the exception that the data enables correspond to the enables for that gate.

32.1.3 LOGIC FUNCTION

There are eight available logic functions including:

- AND-OR
- OR-XOR
- AND
- S-R Latch
- D Flip-Flop with Set and Reset
- D Flip-Flop with Reset
- J-K Flip-Flop with Reset
- Transparent Latch with Set and Reset

Logic functions are shown in Figure 32-2. Each logic function has four inputs and one output. The four inputs are the four data gate outputs of the previous stage. The output is fed to the inversion stage and from there to other peripherals, an output pin, and back to the CLCx itself.

32.1.4 OUTPUT POLARITY

The last stage in the Configurable Logic Cell is the output polarity. Setting the LCxPOL bit of the CLCxPOL register inverts the output signal from the logic stage. Changing the polarity while the interrupts are enabled will cause an interrupt for the resulting output transition.

32.2 CLCx Interrupts

An interrupt will be generated upon a change in the output value of the CLCx when the appropriate interrupt enables are set. A rising edge detector and a falling edge detector are present in each CLC for this purpose.

The CLCxIF bit of the associated PIR5 register will be set when either edge detector is triggered and its associated enable bit is set. The LCxINTP enables rising edge interrupts and the LCxINTN bit enables falling edge interrupts. Both are located in the CLCxCON register.

To fully enable the interrupt, set the following bits:

- CLCxIE bit of the PIE5 register
- LCxINTP bit of the CLCxCON register (for a rising edge detection)
- LCxINTN bit of the CLCxCON register (for a falling edge detection)
- PEIE and GIE bits of the INTCON register

The CLCxIF bit of the PIR5 register, must be cleared in software as part of the interrupt service. If another edge is detected while this flag is being cleared, the flag will still be set at the end of the sequence.

32.3 Output Mirror Copies

Mirror copies of all LCxCON output bits are contained in the CLCxDATA register. Reading this register reads the outputs of all CLCs simultaneously. This prevents any reading skew introduced by testing or reading the LCxOUT bits in the individual CLCxCON registers.

32.4 Effects of a Reset

The CLCxCON register is cleared to zero as the result of a Reset. All other selection and gating values remain unchanged.

32.5 Operation During Sleep

The CLC module operates independently from the system clock and will continue to run during Sleep, provided that the input sources selected remain active.

The HFINTOSC remains active during Sleep when the CLC module is enabled and the HFINTOSC is selected as an input source, regardless of the system clock source selected.

In other words, if the HFINTOSC is simultaneously selected as the system clock and as a CLC input source, when the CLC is enabled, the CPU will go idle during Sleep, but the CLC will continue to operate and the HFINTOSC will remain active.

This will have a direct effect on the Sleep mode current.

32.6 CLCx Setup Steps

The following steps should be followed when setting up the CLCx:

- Disable CLCx by clearing the LCxEN bit.
- Select desired inputs using CLCxSEL0 through CLCxSEL3 registers (See Table 32-2).
- Clear any associated ANSEL bits.
- Enable the chosen inputs through the four gates using CLCxGLS0, CLCxGLS1, CLCxGLS2, and CLCxGLS3 registers.
- Select the gate output polarities with the LCxGyPOL bits of the CLCxPOL register.
- Select the desired logic function with the LCxMODE<2:0> bits of the CLCxCON register.
- Select the desired polarity of the logic output with the LCxPOL bit of the CLCxPOL register. (This step may be combined with the previous gate output polarity step).
- If driving a device pin, set the desired pin PPS control register and also clear the TRIS bit corresponding to that output.
- If interrupts are desired, configure the following bits:
  - Set the LCxINTP bit in the CLCxCON register for rising event.
  - Set the LCxINTN bit in the CLCxCON register for falling event.
  - Set the CLCxIE bit of the PIE5 register.
  - Set the GIE and PEIE bits of the INTCON register.
- Enable the CLCx by setting the LCxEN bit of the CLCxCON register.

FIGURE 32-2: INPUT DATA SELECTION AND GATING

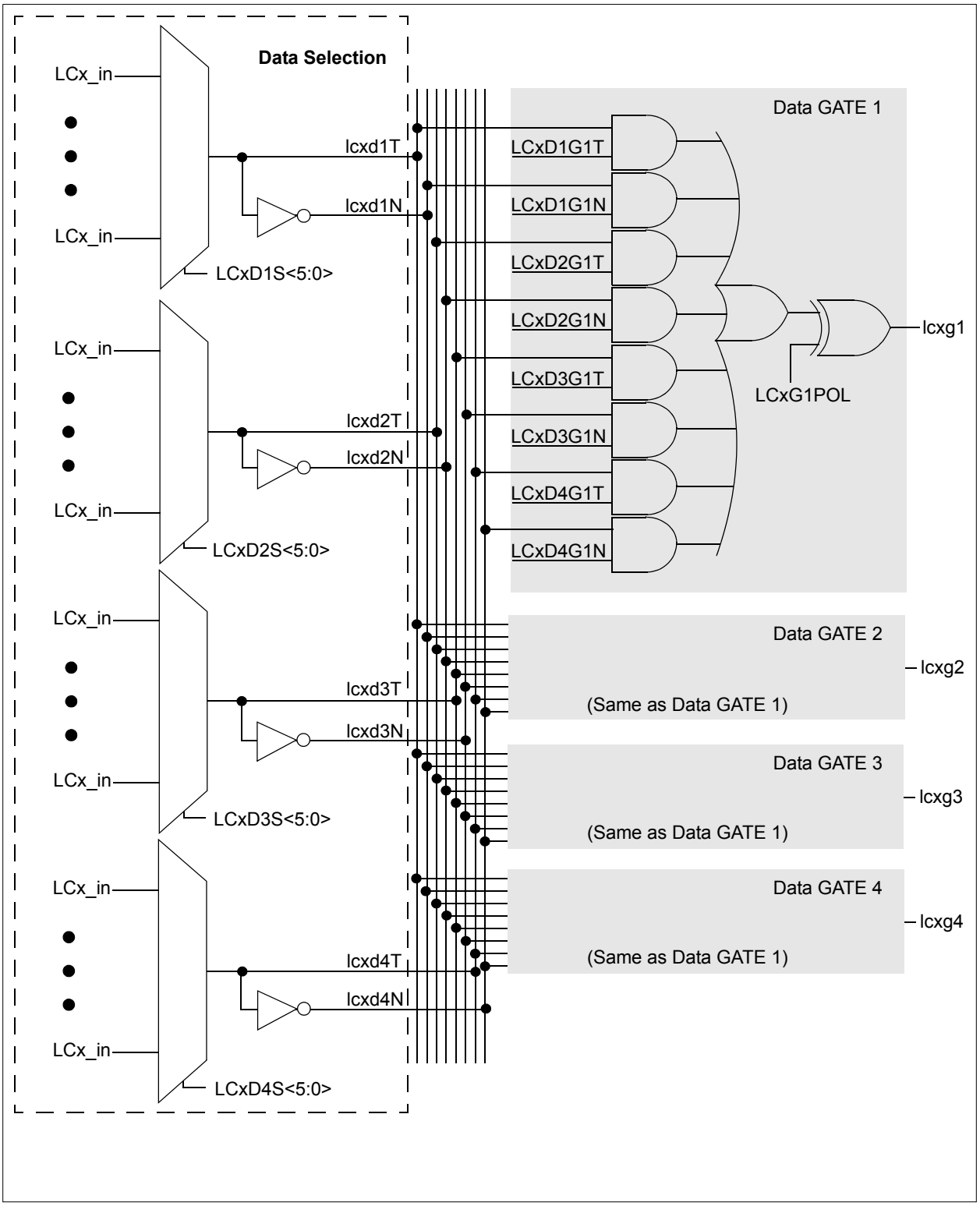

FIGURE 32-3: PROGRAMMABLE LOGIC FUNCTIONS

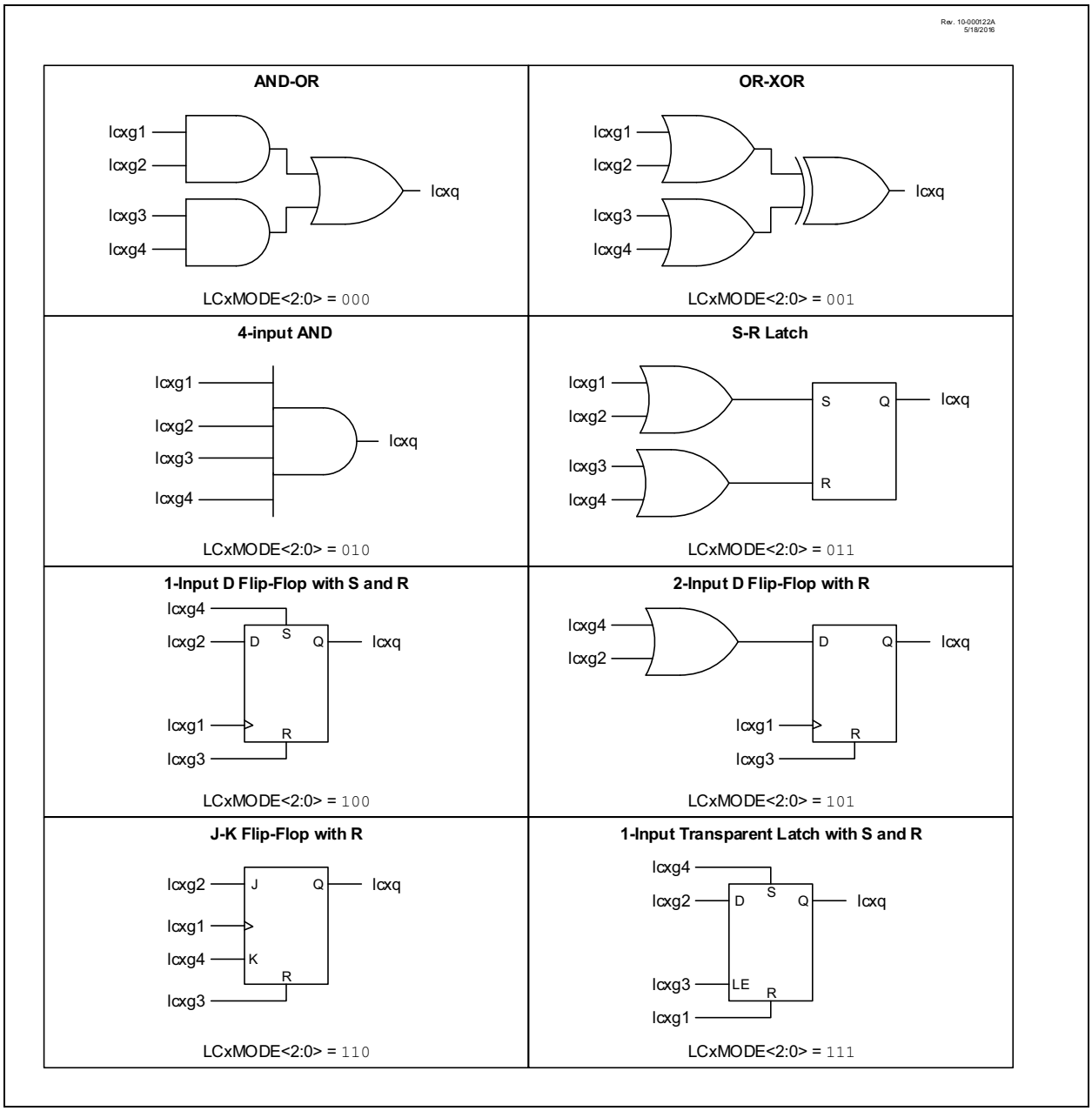

32.7 Register Definitions: CLC Control

REGISTER 32-1: CLCxCON: CONFIGURABLE LOGIC CELL CONTROL REGISTER

R/W-0/0	U-0	R-0/0	R/W-0/0	R/W-0/0	R/W-0/0	R/W-0/0	R/W-0/0
LCxEN	—	LCxOUT	LCxINTP	LCxINTN	LCxMODE<2:0>		
bit 7							bit 0

Legend:		
R = Readable bit	W = Writable bit	U = Unimplemented bit, read as ‘0’
u = Bit is unchanged	x = Bit is unknown	-n/n = Value at POR and BOR/Value at all other Resets
‘1’ = Bit is set	‘0’ = Bit is cleared	

bit 7 **LCxEN:** Configurable Logic Cell Enable bit
`1` = Configurable logic cell is enabled and mixing input signals
`0` = Configurable logic cell is disabled and has logic zero output

bit 6 **Unimplemented:** Read as ‘`0`’

bit 5 **LCxOUT:** Configurable Logic Cell Data Output bit
Read-only: logic cell output data, after LCPOL; sampled from CLCxOUT

bit 4 **LCxINTP:** Configurable Logic Cell Positive Edge Going Interrupt Enable bit
`1` = CLCxIF will be set when a rising edge occurs on CLCxOUT
`0` = CLCxIF will not be set

bit 3 **LCxINTN:** Configurable Logic Cell Negative Edge Going Interrupt Enable bit
`1` = CLCxIF will be set when a falling edge occurs on CLCxOUT
`0` = CLCxIF will not be set

bit 2-0 **LCxMODE<2:0>:** Configurable Logic Cell Functional Mode bits
`111` = Cell is 1-input transparent latch with S and R
`110` = Cell is J-K flip-flop with R
`101` = Cell is 2-input D flip-flop with R
`100` = Cell is 1-input D flip-flop with S and R
`011` = Cell is S-R latch
`010` = Cell is 4-input AND
`001` = Cell is OR-XOR
`000` = Cell is AND-OR

REGISTER 32-2: CLCxPOL: SIGNAL POLARITY CONTROL REGISTER

R/W-0/0	U-0	U-0	U-0	R/W-x/u	R/W-x/u	R/W-x/u	R/W-x/u
LCxPOL	—	—	—	LCxG4POL	LCxG3POL	LCxG2POL	LCxG1POL
bit 7							bit 0

Legend:		
R = Readable bit	W = Writable bit	U = Unimplemented bit, read as ‘0’
u = Bit is unchanged	x = Bit is unknown	-n/n = Value at POR and BOR/Value at all other Resets
‘1’ = Bit is set	‘0’ = Bit is cleared	

bit 7 **LCxPOL:** CLCxOUT Output Polarity Control bit
1 = The output of the logic cell is inverted
0 = The output of the logic cell is not inverted

bit 6-4 **Unimplemented:** Read as ‘0’

bit 3 **LCxG4POL:** Gate 3 Output Polarity Control bit
1 = The output of gate 3 is inverted when applied to the logic cell
0 = The output of gate 3 is not inverted

bit 2 **LCxG3POL:** Gate 2 Output Polarity Control bit
1 = The output of gate 2 is inverted when applied to the logic cell
0 = The output of gate 2 is not inverted

bit 1 **LCxG2POL:** Gate 1 Output Polarity Control bit
1 = The output of gate 1 is inverted when applied to the logic cell
0 = The output of gate 1 is not inverted

bit 0 **LCxG1POL:** Gate 0 Output Polarity Control bit
1 = The output of gate 0 is inverted when applied to the logic cell
0 = The output of gate 0 is not inverted

REGISTER 32-3: CLCxSEL0: GENERIC CLCx DATA 0 SELECT REGISTER

U-0	U-0	R/W-x/u	R/W-x/u	R/W-x/u	R/W-x/u	R/W-x/u	R/W-x/u
—	—	LCxD1S<5:0>					
bit 7							bit 0

Legend:		
R = Readable bit	W = Writable bit	U = Unimplemented bit, read as ‘0’
u = Bit is unchanged	x = Bit is unknown	-n/n = Value at POR and BOR/Value at all other Resets
‘1’ = Bit is set	‘0’ = Bit is cleared	

bit 7-6 **Unimplemented:** Read as ‘0’

bit 5-0 **LCxD1S<5:0>:** CLCx Data1 Input Selection bits
See Table 32-2.

REGISTER 32-4: CLCxSEL1: GENERIC CLCx DATA 1 SELECT REGISTER

U-0	U-0	R/W-x/u	R/W-x/u	R/W-x/u	R/W-x/u	R/W-x/u	R/W-x/u
—	—	LCxD2S<5:0>					
bit 7							bit 0

Legend:		
R = Readable bit	W = Writable bit	U = Unimplemented bit, read as ‘0’
u = Bit is unchanged	x = Bit is unknown	-n/n = Value at POR and BOR/Value at all other Resets
‘1’ = Bit is set	‘0’ = Bit is cleared	

bit 7-6 **Unimplemented:** Read as ‘0’

bit 5-0 **LCxD2S<5:0>:** CLCx Data 2 Input Selection bits
See Table 32-2.

REGISTER 32-5: CLCxSEL2: GENERIC CLCx DATA 2 SELECT REGISTER

U-0	U-0	R/W-x/u	R/W-x/u	R/W-x/u	R/W-x/u	R/W-x/u	R/W-x/u
—	—	LCxD3S<5:0>					
bit 7							bit 0

Legend:		
R = Readable bit	W = Writable bit	U = Unimplemented bit, read as ‘0’
u = Bit is unchanged	x = Bit is unknown	-n/n = Value at POR and BOR/Value at all other Resets
‘1’ = Bit is set	‘0’ = Bit is cleared	

bit 7-6 **Unimplemented:** Read as ‘0’

bit 5-0 **LCxD3S<5:0>:** CLCx Data 3 Input Selection bits
See Table 32-2.

REGISTER 32-6: CLCxSEL3: GENERIC CLCx DATA 3 SELECT REGISTER

U-0	U-0	R/W-x/u	R/W-x/u	R/W-x/u	R/W-x/u	R/W-x/u	R/W-x/u
—	—	LCxD4S<5:0>					
bit 7							bit 0

Legend:		
R = Readable bit	W = Writable bit	U = Unimplemented bit, read as ‘0’
u = Bit is unchanged	x = Bit is unknown	-n/n = Value at POR and BOR/Value at all other Resets
‘1’ = Bit is set	‘0’ = Bit is cleared	

bit 7-6 **Unimplemented:** Read as ‘0’

bit 5-0 **LCxD4S<5:0>:** CLCx Data 4 Input Selection bits
See Table 32-2.

REGISTER 32-7: CLCxGLS0: GATE 0 LOGIC SELECT REGISTER

R/W-x/u	R/W-x/u	R/W-x/u	R/W-x/u	R/W-x/u	R/W-x/u	R/W-x/u	R/W-x/u
LCxG1D4T	LCxG1D4N	LCxG1D3T	LCxG1D3N	LCxG1D2T	LCxG1D2N	LCxG1D1T	LCxG1D1N
bit 7							bit 0

Legend:		
R = Readable bit	W = Writable bit	U = Unimplemented bit, read as ‘0’
u = Bit is unchanged	x = Bit is unknown	-n/n = Value at POR and BOR/Value at all other Resets
‘1’ = Bit is set	‘0’ = Bit is cleared	

bit 7 **LCxG1D4T:** Gate 0 Data 4 True (non-inverted) bit
1 = CLCIN3 (true) is gated into CLCx Gate 0
0 = CLCIN3 (true) is not gated into CLCx Gate 0

bit 6 **LCxG1D4N:** Gate 0 Data 4 Negated (inverted) bit
1 = CLCIN3 (inverted) is gated into CLCx Gate 0
0 = CLCIN3 (inverted) is not gated into CLCx Gate 0

bit 5 **LCxG1D3T:** Gate 0 Data 3 True (non-inverted) bit
1 = CLCIN2 (true) is gated into CLCx Gate 0
0 = CLCIN2 (true) is not gated into CLCx Gate 0

bit 4 **LCxG1D3N:** Gate 0 Data 3 Negated (inverted) bit
1 = CLCIN2 (inverted) is gated into CLCx Gate 0
0 = CLCIN2 (inverted) is not gated into CLCx Gate 0

bit 3 **LCxG1D2T:** Gate 0 Data 2 True (non-inverted) bit
1 = CLCIN1 (true) is gated into CLCx Gate 0
0 = CLCIN1 (true) is not gated into l CLCx Gate 0

bit 2 **LCxG1D2N:** Gate 0 Data 2 Negated (inverted) bit
1 = CLCIN1 (inverted) is gated into CLCx Gate 0
0 = CLCIN1 (inverted) is not gated into CLCx Gate 0

bit 1 **LCxG1D1T:** Gate 0 Data 1 True (non-inverted) bit
1 = CLCIN0 (true) is gated into CLCx Gate 0
0 = CLCIN0 (true) is not gated into CLCx Gate 0

bit 0 **LCxG1D1N:** Gate 0 Data 1 Negated (inverted) bit
1 = CLCIN0 (inverted) is gated into CLCx Gate 0
0 = CLCIN0 (inverted) is not gated into CLCx Gate 0

REGISTER 32-8: CLCxGLS1: GATE 1 LOGIC SELECT REGISTER

R/W-x/u	R/W-x/u	R/W-x/u	R/W-x/u	R/W-x/u	R/W-x/u	R/W-x/u	R/W-x/u
LCxG2D4T	LCxG2D4N	LCxG2D3T	LCxG2D3N	LCxG2D2T	LCxG2D2N	LCxG2D1T	LCxG2D1N
bit 7							bit 0

Legend:		
R = Readable bit	W = Writable bit	U = Unimplemented bit, read as ‘0’
u = Bit is unchanged	x = Bit is unknown	-n/n = Value at POR and BOR/Value at all other Resets
‘1’ = Bit is set	‘0’ = Bit is cleared	

bit 7 **LCxG2D4T:** Gate 1 Data 4 True (non-inverted) bit
1 = CLCIN3 (true) is gated into CLCx Gate 1
0 = CLCIN3 (true) is not gated into CLCx Gate 1

bit 6 **LCxG2D4N:** Gate 1 Data 4 Negated (inverted) bit
1 = CLCIN3 (inverted) is gated into CLCx Gate 1
0 = CLCIN3 (inverted) is not gated into CLCx Gate 1

bit 5 **LCxG2D3T:** Gate 1 Data 3 True (non-inverted) bit
1 = CLCIN2 (true) is gated into CLCx Gate 1
0 = CLCIN2 (true) is not gated into CLCx Gate 1

bit 4 **LCxG2D3N:** Gate 1 Data 3 Negated (inverted) bit
1 = CLCIN2 (inverted) is gated into CLCx Gate 1
0 = CLCIN2 (inverted) is not gated into CLCx Gate 1

bit 3 **LCxG2D2T:** Gate 1 Data 2 True (non-inverted) bit
1 = CLCIN1 (true) is gated into CLCx Gate 1
0 = CLCIN1 (true) is not gated into CLCx Gate 1

bit 2 **LCxG2D2N:** Gate 1 Data 2 Negated (inverted) bit
1 = CLCIN1 (inverted) is gated into CLCx Gate 1
0 = CLCIN1 (inverted) is not gated into CLCx Gate 1

bit 1 **LCxG2D1T:** Gate 1 Data 1 True (non-inverted) bit
1 = CLCIN0 (true) is gated into CLCx Gate 1
0 = CLCIN0 (true) is not gated into CLCx Gate1

bit 0 **LCxG2D1N:** Gate 1 Data 1 Negated (inverted) bit
1 = CLCIN0 (inverted) is gated into CLCx Gate 1
0 = CLCIN0 (inverted) is not gated into CLCx Gate 1

REGISTER 32-9: CLCxGLS2: GATE 2 LOGIC SELECT REGISTER

R/W-x/u	R/W-x/u	R/W-x/u	R/W-x/u	R/W-x/u	R/W-x/u	R/W-x/u	R/W-x/u
LCxG3D4T	LCxG3D4N	LCxG3D3T	LCxG3D3N	LCxG3D2T	LCxG3D2N	LCxG3D1T	LCxG3D1N
bit 7							bit 0

Legend:		
R = Readable bit	W = Writable bit	U = Unimplemented bit, read as ‘0’
u = Bit is unchanged	x = Bit is unknown	-n/n = Value at POR and BOR/Value at all other Resets
‘1’ = Bit is set	‘0’ = Bit is cleared	

bit 7 **LCxG3D4T:** Gate 2 Data 4 True (non-inverted) bit
1 = CLCIN3 (true) is gated into CLCx Gate 2
0 = CLCIN3 (true) is not gated into CLCx Gate 2

bit 6 **LCxG3D4N:** Gate 2 Data 4 Negated (inverted) bit
1 = CLCIN3 (inverted) is gated into CLCx Gate 2
0 = CLCIN3 (inverted) is not gated into CLCx Gate 2

bit 5 **LCxG3D3T:** Gate 2 Data 3 True (non-inverted) bit
1 = CLCIN2 (true) is gated into CLCx Gate 2
0 = CLCIN2 (true) is not gated into CLCx Gate 2

bit 4 **LCxG3D3N:** Gate 2 Data 3 Negated (inverted) bit
1 = CLCIN2 (inverted) is gated into CLCx Gate 2
0 = CLCIN2 (inverted) is not gated into CLCx Gate 2

bit 3 **LCxG3D2T:** Gate 2 Data 2 True (non-inverted) bit
1 = CLCIN1 (true) is gated into CLCx Gate 2
0 = CLCIN1 (true) is not gated into CLCx Gate 2

bit 2 **LCxG3D2N:** Gate 2 Data 2 Negated (inverted) bit
1 = CLCIN1 (inverted) is gated into CLCx Gate 2
0 = CLCIN1 (inverted) is not gated into CLCx Gate 2

bit 1 **LCxG3D1T:** Gate 2 Data 1 True (non-inverted) bit
1 = CLCIN0 (true) is gated into CLCx Gate 2
0 = CLCIN0 (true) is not gated into CLCx Gate 2

bit 0 **LCxG3D1N:** Gate 2 Data 1 Negated (inverted) bit
1 = CLCIN0 (inverted) is gated into CLCx Gate 2
0 = CLCIN0 (inverted) is not gated into CLCx Gate 2

REGISTER 32-10: CLCxGLS3: GATE 3 LOGIC SELECT REGISTER

R/W-x/u	R/W-x/u	R/W-x/u	R/W-x/u	R/W-x/u	R/W-x/u	R/W-x/u	R/W-x/u
LCxG4D4T	LCxG4D4N	LCxG4D3T	LCxG4D3N	LCxG4D2T	LCxG4D2N	LCxG4D1T	LCxG4D1N
bit 7							bit 0

Legend:		
R = Readable bit	W = Writable bit	U = Unimplemented bit, read as ‘0’
u = Bit is unchanged	x = Bit is unknown	-n/n = Value at POR and BOR/Value at all other Resets
‘1’ = Bit is set	‘0’ = Bit is cleared	

bit 7 **LCxG4D4T:** Gate 3 Data 4 True (non-inverted) bit
1 = CLCIN3 (true) is gated into CLCx Gate 3
0 = CLCIN3 (true) is not gated into CLCx Gate 3

bit 6 **LCxG4D4N:** Gate 3 Data 4 Negated (inverted) bit
1 = CLCIN3 (inverted) is gated into CLCx Gate 3
0 = CLCIN3 (inverted) is not gated into CLCx Gate 3

bit 5 **LCxG4D3T:** Gate 3 Data 3 True (non-inverted) bit
1 = CLCIN2 (true) is gated into CLCx Gate 3
0 = CLCIN2 (true) is not gated into CLCx Gate 3

bit 4 **LCxG4D3N:** Gate 3 Data 3 Negated (inverted) bit
1 = CLCIN2 (inverted) is gated into CLCx Gate 3
0 = CLCIN2 (inverted) is not gated into CLCx Gate 3

bit 3 **LCxG4D2T:** Gate 3 Data 2 True (non-inverted) bit
1 = CLCIN1 (true) is gated into CLCx Gate 3
0 = CLCIN1 (true) is not gated into CLCx Gate 3

bit 2 **LCxG4D2N:** Gate 3 Data 2 Negated (inverted) bit
1 = CLCIN1 (inverted) is gated into CLCx Gate 3
0 = CLCIN1 (inverted) is not gated into CLCx Gate 3

bit 1 **LCxG4D1T:** Gate 4 Data 1 True (non-inverted) bit
1 = CLCIN0 (true) is gated into CLCx Gate 3
0 = CLCIN0 (true) is not gated into CLCx Gate 3

bit 0 **LCxG4D1N:** Gate 3 Data 1 Negated (inverted) bit
1 = CLCIN0 (inverted) is gated into CLCx Gate 3
0 = CLCIN0 (inverted) is not gated into CLCx Gate 3

REGISTER 32-11: CLCDATA: CLC DATA OUTPUT

U-0	U-0	U-0	U-0	R-0	R-0	R-0	R-0
—	—	—	—	MLC4OUT	MLC3OUT	MLC2OUT	MLC1OUT
bit 7							bit 0

Legend:		
R = Readable bit	W = Writable bit	U = Unimplemented bit, read as ‘0’
u = Bit is unchanged	x = Bit is unknown	-n/n = Value at POR and BOR/Value at all other Resets
‘1’ = Bit is set	‘0’ = Bit is cleared	

bit 7-4 **Unimplemented:** Read as ‘0’

bit 3 **MLC4OUT:** Mirror copy of LC4OUT bit

bit 2 **MLC3OUT:** Mirror copy of LC3OUT bit

bit 1 **MLC2OUT:** Mirror copy of LC2OUT bit

bit 0 **MLC1OUT:** Mirror copy of LC1OUT bit

TABLE 32-4: SUMMARY OF REGISTERS ASSOCIATED WITH CLCx

Name	Bit 7	Bit 6	Bit 5	Bit 4	Bit 3	Bit 2	Bit 1	Bit 0	Register on Page
INTCON	GIE	PEIE	—	—	—	—	—	INTEDG	164
PIR5	CLC4IF	CLC3IF	CLC2IF	CLC1IF	—	—	—	TMR1GIF	179
PIE5	CLC4IE	CLC4IE	CLC2IE	CLC1IE	—	—	—	TMR1GIE	170
CLC1CON	LC1EN	—	LC1OUT	LC1INTP	LC1INTN	LC1MODE<2:0>			502
CLC1POL	LC1POL	—	—	—	LC1G4POL	LC1G3POL	LC1G2POL	LC1G1POL	503
CLC1SEL0	—	—	LC1D1S<5:0>						504
CLC1SEL1	—	—	LC1D2S<5:0>						504
CLC1SEL2	—	—	LC1D3S<5:0>						504
CLC1SEL3	—	—	LC1D4S<5:0>						505
CLC1GLS0	LC1G1D4T	LC1G1D4N	LC1G1D3T	LC1G1D3N	LC1G1D2T	LC1G1D2N	LC1G1D1T	LC1G1D1N	506
CLC1GLS1	LC1G2D4T	LC1G2D4N	LC1G2D3T	LC1G2D3N	LC1G2D2T	LC1G2D2N	LC1G2D1T	LC1G2D1N	507
CLC1GLS2	LC1G3D4T	LC1G3D4N	LC1G3D3T	LC1G3D3N	LC1G3D2T	LC1G3D2N	LC1G3D1T	LC1G3D1N	508
CLC1GLS3	LC1G4D4T	LC1G4D4N	LC1G4D3T	LC1G4D3N	LC1G4D2T	LC1G4D2N	LC1G4D1T	LC1G4D1N	509
CLC2CON	LC2EN	—	LC2OUT	LC2INTP	LC2INTN	LC2MODE<2:0>			502
CLC2POL	LC2POL	—	—	—	LC2G4POL	LC2G3POL	LC2G2POL	LC2G1POL	503
CLC2SEL0	—	—	LC2D1S<5:0>						504
CLC2SEL1	—	—	LC2D2S<5:0>						504
CLC2SEL2	—	—	LC2D3S<5:0>						504
CLC2SEL3	—	—	LC2D4S<5:0>						505
CLC2GLS0	LC2G1D4T	LC2G1D4N	LC2G1D3T	LC2G1D3N	LC2G1D2T	LC2G1D2N	LC2G1D1T	LC2G1D1N	506
CLC2GLS1	LC2G2D4T	LC2G2D4N	LC2G2D3T	LC2G2D3N	LC2G2D2T	LC2G2D2N	LC2G2D1T	LC2G2D1N	507
CLC2GLS2	LC2G3D4T	LC2G3D4N	LC2G3D3T	LC2G3D3N	LC2G3D2T	LC2G3D2N	LC2G3D1T	LC2G3D1N	508
CLC2GLS3	LC2G4D4T	LC2G4D4N	LC2G4D3T	LC2G4D3N	LC2G4D2T	LC2G4D2N	LC2G4D1T	LC2G4D1N	509
CLC3CON	LC3EN	—	LC3OUT	LC3INTP	LC3INTN	LC3MODE<2:0>			502
CLC3POL	LC3POL	—	—	—	LC3G4POL	LC3G3POL	LC3G2POL	LC3G1POL	503
CLC3SEL0	—	—	LC3D1S<5:0>						504
CLC3SEL1	—	—	LC3D2S<5:0>						504
CLC3SEL2	—	—	LC3D3S<5:0>						504
CLC3SEL3	—	—	LC3D4S<5:0>						505
CLC3GLS0	LC3G1D4T	LC3G1D4N	LC3G1D3T	LC3G1D3N	LC3G1D2T	LC3G1D2N	LC3G1D1T	LC3G1D1N	506
CLC3GLS1	LC3G2D4T	LC3G2D4N	LC3G2D3T	LC3G2D3N	LC3G2D2T	LC3G2D2N	LC3G2D1T	LC3G2D1N	507
CLC3GLS2	LC3G3D4T	LC3G3D4N	LC3G3D3T	LC3G3D3N	LC3G3D2T	LC3G3D2N	LC3G3D1T	LC3G3D1N	508
CLC3GLS3	LC3G4D4T	LC3G4D4N	LC3G4D3T	LC3G4D3N	LC3G4D2T	LC3G4D2N	LC3G4D1T	LC3G4D1N	509
CLC4CON	LC4EN	—	LC4OUT	LC4INTP	LC4INTN	LC4MODE<2:0>			502
CLC4POL	LC4POL	—	—	—	LC4G4POL	LC4G3POL	LC4G2POL	LC4G1POL	503
CLC4SEL0	—	—	LC4D1S<5:0>						504
CLC4SEL1	—	—	LC4D2S<5:0>						504
CLC4SEL2	—	—	LC4D3S<5:0>						504
CLC4SEL3	—	—	LC4D4S<5:0>						505
CLC4GLS0	LC4G1D4T	LC4G1D4N	LC4G1D3T	LC4G1D3N	LC4G1D2T	LC4G1D2N	LC4G1D1T	LC4G1D1N	506

Legend: — = unimplemented, read as '0'. Shaded cells are unused by the CLCx modules.

TABLE 32-4: SUMMARY OF REGISTERS ASSOCIATED WITH CLCx (continued)

Name	Bit 7	Bit 6	Bit 5	Bit 4	Bit 3	Bit 2	Bit 1	Bit 0	
CLC4GLS1	LC4G2D4T	LC4G2D4N	LC4G2D3T	LC4G2D3N	LC4G2D2T	LC4G2D2N	LC4G2D1T	LC4G2D1N	507
CLC4GLS2	LC4G3D4T	LC4G3D4N	LC4G3D3T	LC4G3D3N	LC4G3D2T	LC4G3D2N	LC4G3D1T	LC4G3D1N	508
CLC4GLS3	LC4G4D4T	LC4G4D4N	LC4G4D3T	LC4G4D3N	LC4G4D2T	LC4G4D2N	LC4G4D1T	LC4G4D1N	509
CLCIN0PPS	—	—	—	CLCIN0PPS<4:0>					264
CLCIN1PPS	—	—	—	CLCIN1PPS<4:0>					264
CLCIN2PPS	—	—	—	CLCIN2PPS<4:0>					264
CLCIN3PPS	—	—	—	CLCIN3PPS<4:0>					264

Legend: — = unimplemented, read as '0'. Shaded cells are unused by the CLCx modules.

33.0 MASTER SYNCHRONOUS SERIAL PORT (MSSP) MODULES

33.1 MSSP Module Overview

The Master Synchronous Serial Port (MSSP) module is a serial interface useful for communicating with other peripheral or microcontroller devices. These peripheral devices may be serial EEPROMs, shift registers, display drivers, A/D converters, etc. The MSSP module can operate in one of two modes:

- Serial Peripheral Interface (SPI)
- Inter-Integrated Circuit (I^2C)

The SPI interface supports the following modes and features:

- Master mode
- Slave mode
- Clock Polarity
- Slave Select Synchronization (Slave mode only)
- Daisy-chain connection of slave devices

Figure 33-1 is a block diagram of the SPI interface module.

FIGURE 33-1: MSSP BLOCK DIAGRAM (SPI MODE)

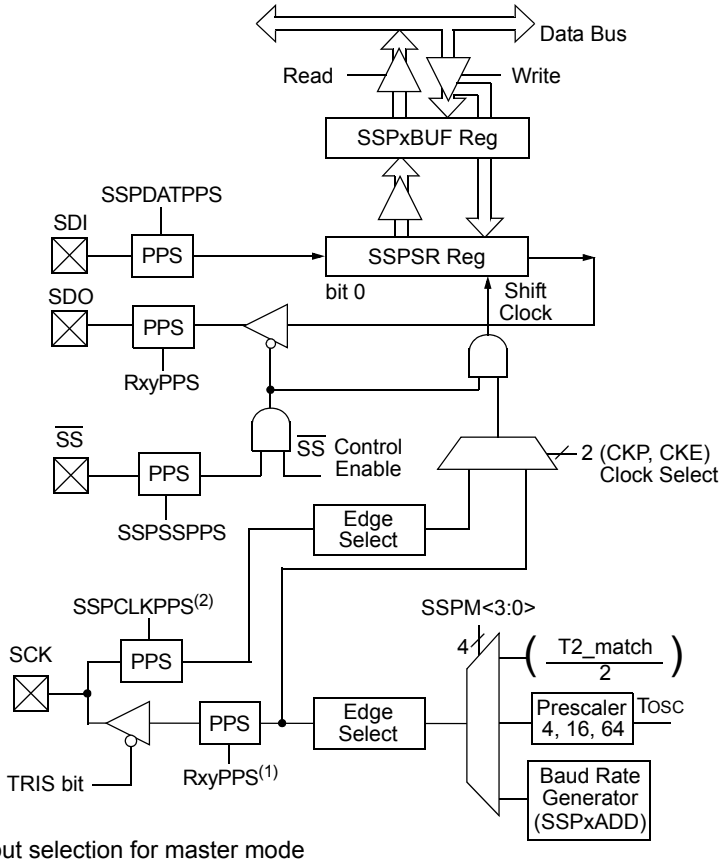

Note 1: Output selection for master mode

2: Input selection for slave mode

The I²C interface supports the following modes and features:

- Master mode
- Slave mode
- Byte NACKing (Slave mode)
- Limited multi-master support
- 7-bit and 10-bit addressing
- Start and Stop interrupts
- Interrupt masking
- Clock stretching
- Bus collision detection
- General call address matching
- Address masking
- Selectable SDA hold times

Figure 33-2 is a block diagram of the I²C interface module in Master mode. Figure 33-3 is a diagram of the I²C interface module in Slave mode.

Note 1: In devices with more than one MSSP module, it is very important to pay close attention to SSPxCONx register names. SSPxCON1 and SSPxCON2 registers control different operational aspects of the same module, while SSPxCON1 and SSP2CON1 control the same features for two different modules.

2: Throughout this section, generic references to an MSSPx module in any of its operating modes may be interpreted as being equally applicable to MSSPx or MSSP2. Register names, module I/O signals, and bit names may use the generic designator 'x' to indicate the use of a numeral to distinguish a particular module when required.

FIGURE 33-2: MSSP BLOCK DIAGRAM (I²C MASTER MODE)

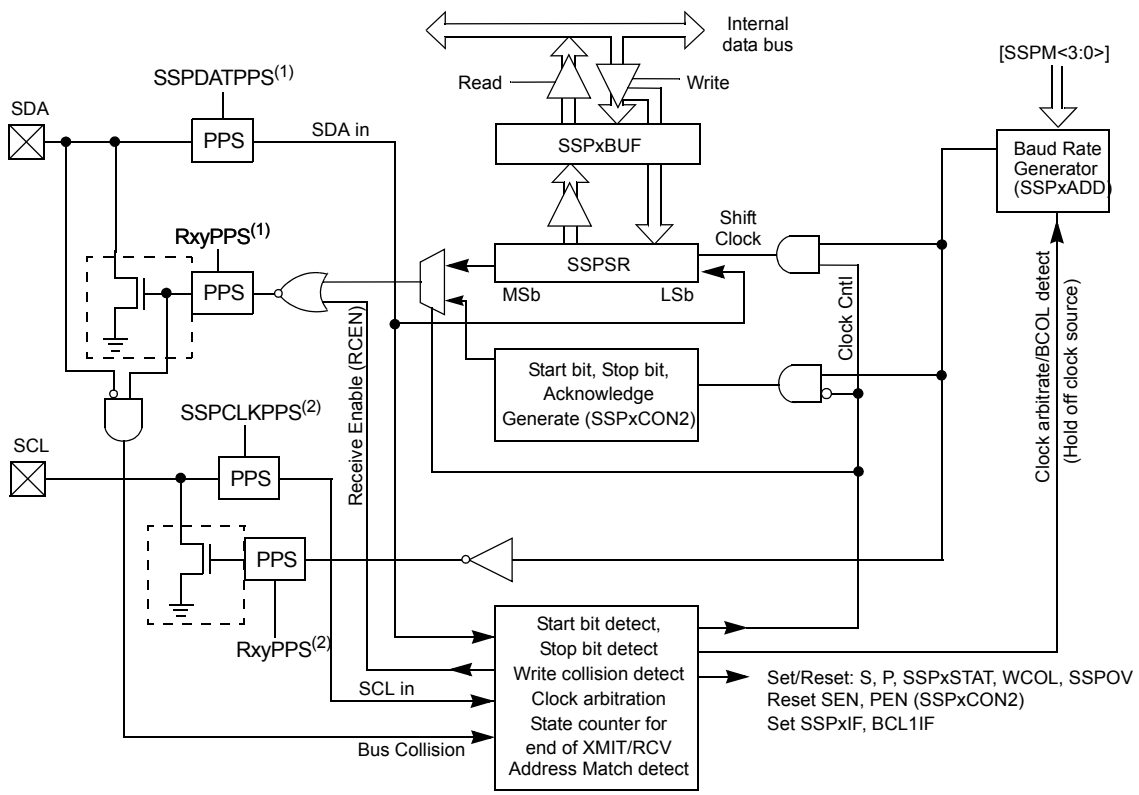

Note 1: SDA pin selections must be the same for input and output

2: SCL pin selections must be the same for input and output

FIGURE 33-3: MSSP BLOCK DIAGRAM (I^2C SLAVE MODE)

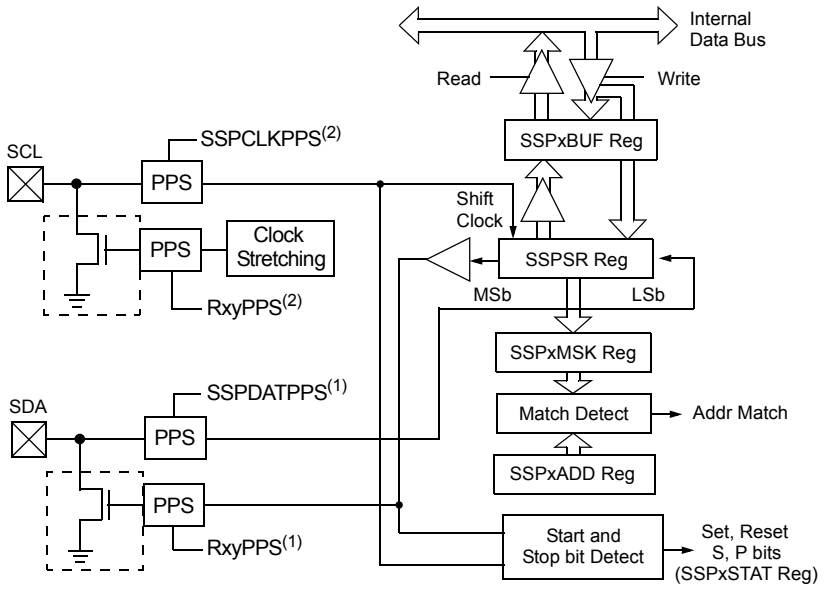

Note 1: SDA pin selections must be the same for input and output

2: SCL pin selections must be the same for input and output

33.2 SPI Mode Overview

The Serial Peripheral Interface (SPI) bus is a synchronous serial data communication bus that operates in Full-Duplex mode. Devices communicate in a master/slave environment where the master device initiates the communication. A slave device is controlled through a Chip Select known as Slave Select.

The SPI bus specifies four signal connections:

- Serial Clock (SCK)
- Serial Data Out (SDO)
- Serial Data In (SDI)
- Slave Select ($\overline{SS}$)

Figure 33-1 shows the block diagram of the MSSP module when operating in SPI mode.

The SPI bus operates with a single master device and one or more slave devices. When multiple slave devices are used, an independent Slave Select connection can be used to address each slave individually.

Figure 33-4 shows a typical connection between a master device and multiple slave devices.

The master selects only one slave at a time. Most slave devices have tri-state outputs so their output signal appears disconnected from the bus when they are not selected.

Transmissions involve two shift registers, eight bits in size, one in the master and one in the slave. Data is always shifted out one bit at a time, with the Most Significant bit (MSb) shifted out first. At the same time, a new Least Significant bit (LSb) is shifted into the same register.

Figure 33-5 shows a typical connection between two processors configured as master and slave devices.

Data is shifted out of both shift registers on the programmed clock edge and latched on the opposite edge of the clock.

The master device transmits information out on its SDO output pin which is connected to, and received by, the slave's SDI input pin. The slave device transmits information out on its SDO output pin, which is connected to, and received by, the master's SDI input pin.

To begin communication, the master device first sends out the clock signal. Both the master and the slave devices should be configured for the same clock polarity.

The master device starts a transmission by sending out the MSb from its shift register. The slave device reads this bit from that same line and saves it into the LSb position of its shift register.

During each SPI clock cycle, a full-duplex data transmission occurs. This means that while the master device is sending out the MSb from its shift register (on its SDO pin) and the slave device is reading this bit and saving it as the LSb of its shift register, that the slave device is also sending out the MSb from its shift register (on its SDO pin) and the master device is reading this bit and saving it as the LSb of its shift register.

After eight bits have been shifted out, the master and slave have exchanged register values.

If there is more data to exchange, the shift registers are loaded with new data and the process repeats itself.

Whether the data is meaningful or not (dummy data), depends on the application software. This leads to three scenarios for data transmission:

- Master sends useful data and slave sends dummy data.
- Master sends useful data and slave sends useful data.
- Master sends dummy data and slave sends useful data.

Transmissions must be performed in multiples of eight clock pulses. When there is no more data to be transmitted, the master stops sending the clock signal and it deselects the slave.

Every slave device connected to the bus that has not been selected through its slave select line must disregard the clock and transmission signals and must not transmit out any data of its own.

FIGURE 33-4: SPI MASTER AND MULTIPLE SLAVE CONNECTION

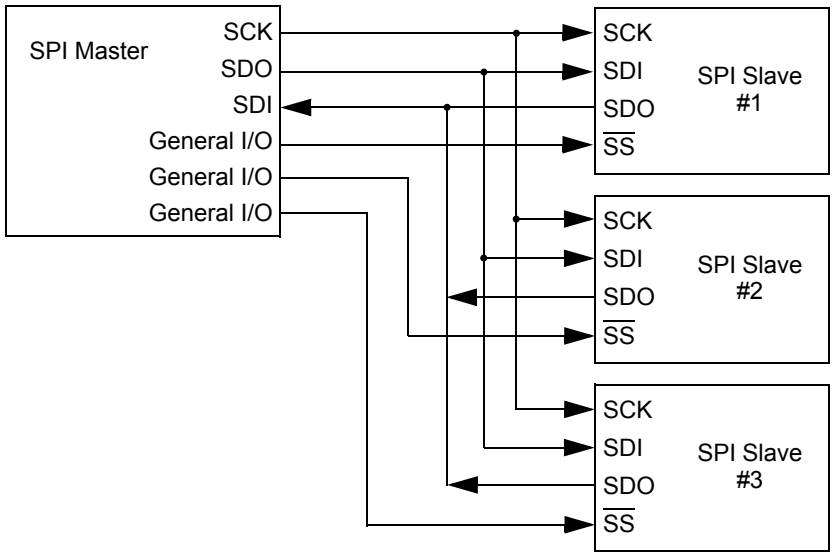

33.2.1 SPI MODE REGISTERS

The MSSP module has five registers for SPI mode operation. These are:

- MSSP STATUS register (SSPxSTAT)
- MSSP Control register 1 (SSPxCON1)
- MSSP Control register 3 (SSPxCON3)
- MSSP Data Buffer register (SSPxBUF)
- MSSP Address register (SSPxADD)
- MSSP Shift register (SSPxSR)
  (Not directly accessible)

SSPxCON1 and SSPxSTAT are the control and status registers in SPI mode operation. The SSPxCON1 register is readable and writable. The lower six bits of the SSPxSTAT are read-only. The upper two bits of the SSPxSTAT are read/write.

In one SPI master mode, SSPxADD can be loaded with a value used in the Baud Rate Generator. More information on the Baud Rate Generator is available in **Section 33.7 “Baud Rate Generator”**.

SSPxSR is the shift register used for shifting data in and out. SSPxBUF provides indirect access to the SSPxSR register. SSPxBUF is the buffer register to which data bytes are written, and from which data bytes are read.

In receive operations, SSPxSR and SSPxBUF together create a buffered receiver. When SSPxSR receives a complete byte, it is transferred to SSPxBUF and the SSPxIF interrupt is set.

During transmission, the SSPxBUF is not buffered. A write to SSPxBUF will write to both SSPxBUF and SSPxSR.

33.2.2 SPI MODE OPERATION

When initializing the SPI, several options need to be specified. This is done by programming the appropriate control bits (SSPxCON1<3:0> and SSPxSTAT<7:6>). These control bits allow the following to be specified:

- Master mode (SCK is the clock output)
- Slave mode (SCK is the clock input)
- Clock Polarity (Idle state of SCK)
- Data Input Sample Phase (middle or end of data output time)
- Clock Edge (output data on rising/falling edge of SCK)
- Clock Rate (Master mode only)
- Slave Select mode (Slave mode only)

To enable the serial port, SSP Enable bit, SSPEN of the SSPxCON1 register, must be set. To reset or reconfigure SPI mode, clear the SSPEN bit, re-initialize the SSPxCONx registers and then set the SSPEN bit. This configures the SDI, SDO, SCK and $\overline{SS}$ pins as serial port pins. For the pins to behave as the serial port function, some must have their data direction bits (in the TRISx register) appropriately programmed as follows:

- SDI must have corresponding TRIS bit set
- SDO must have corresponding TRIS bit cleared
- SCK (Master mode) must have corresponding TRIS bit cleared
- SCK (Slave mode) must have corresponding TRIS bit set
- $\overline{SS}$ must have corresponding TRIS bit set

Any serial port function that is not desired may be overridden by programming the corresponding data direction (TRIS) register to the opposite value.

The MSSP consists of a transmit/receive shift register (SSPxSR) and a buffer register (SSPxBUF). The SSPxSR shifts the data in and out of the device, MSb first. The SSPxBUF holds the data that was written to the SSPxSR until the received data is ready. Once the eight bits of data have been received, that byte is moved to the SSPxBUF register. Then, the Buffer Full Detect bit, BF, of the SSPxSTAT register, and the interrupt flag bit, SSPxIF, are set. Any write to the SSPxBUF register during transmission/reception of data will be ignored and the write collision detect bit WCOL of the SSPxCON1 register, will be set. User software must clear the WCOL bit to allow the following write(s) to the SSPxBUF register to complete successfully.

When the application software is expecting to receive valid data, the SSPxBUF should be read before the next byte of data to transfer is written to the SSPxBUF. The Buffer Full bit, BF, of the SSPxSTAT register, indicates when SSPxBUF has been loaded with the received data (transmission is complete). When the SSPxBUF is read, the BF bit is cleared. This data may be irrelevant if the SPI is only a transmitter. Generally, the MSSP interrupt is used to determine when the transmission/reception has completed. If the interrupt method is not going to be used, then software polling can be done to ensure that a write collision does not occur.

The SSPxSR is not directly readable or writable and can only be accessed by addressing the SSPxBUF register.

FIGURE 33-5: SPI MASTER/SLAVE CONNECTION

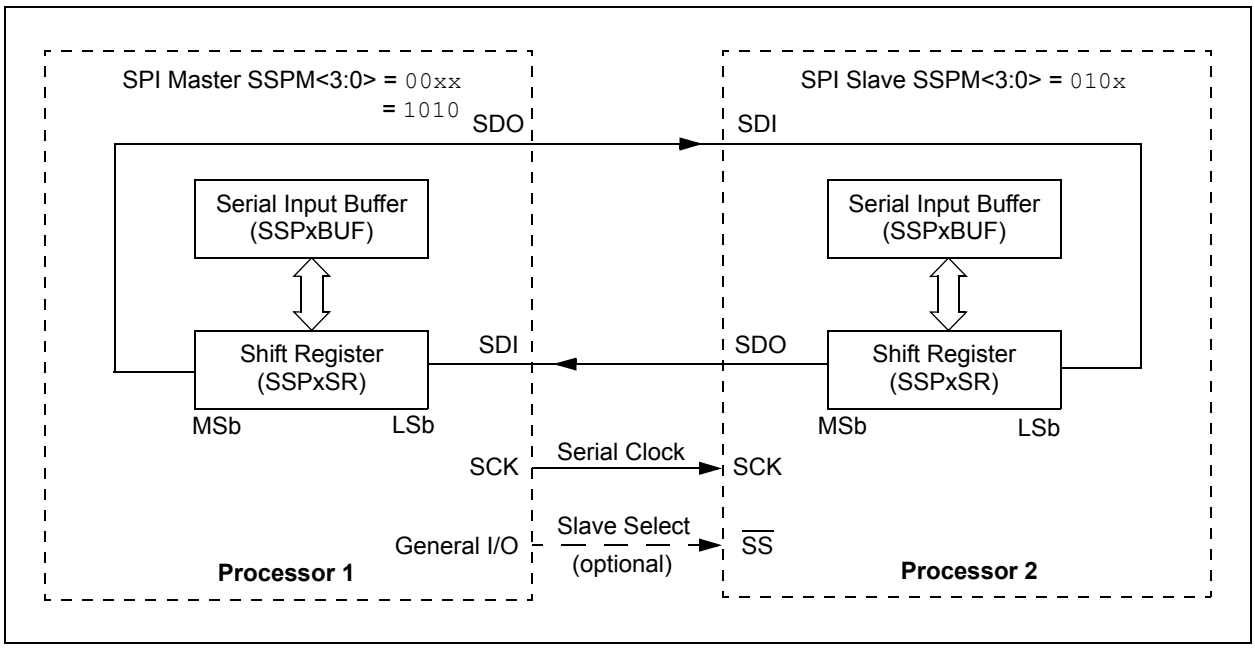

33.2.3 SPI MASTER MODE

The master can initiate the data transfer at any time because it controls the SCK line. The master determines when the slave (Processor 2, Figure 33-5) is to broadcast data by the software protocol.

In Master mode, the data is transmitted/received as soon as the SSPxBUF register is written to. If the SPI is only going to receive, the SDO output could be disabled (programmed as an input). The SSPxSR register will continue to shift in the signal present on the SDI pin at the programmed clock rate. As each byte is received, it will be loaded into the SSPxBUF register as if a normal received byte (interrupts and Status bits appropriately set).

The clock polarity is selected by appropriately programming the CKP bit of the SSPxCON1 register and the CKE bit of the SSPxSTAT register. This then, would give waveforms for SPI communication as shown in Figure 33-6, Figure 33-8, Figure 33-9 and Figure 33-10, where the MSB is transmitted first. In Master mode, the SPI clock rate (bit rate) is user programmable to be one of the following:

- FOSC/4 (or TCY)
- FOSC/16 (or 4 * TCY)
- FOSC/64 (or 16 * TCY)
- Timer2 output/2
- FOSC/(4 * (SSPxADD + 1))

If SMP = 0, it is necessary to select the SCK pin as an input using SCKPPS. The input and output PPS selectors must go to the same pin.

If SMP = 1 this is not required, and only the SCK output has to be routed; the input selection is ignored.

Figure 33-6 shows the waveforms for Master mode.

When the CKE bit is set, the SDO data is valid before there is a clock edge on SCK. The change of the input sample is shown based on the state of the SMP bit. The time when the SSPxBUF is loaded with the received data is shown.

FIGURE 33-6: SPI MODE WAVEFORM (MASTER MODE)

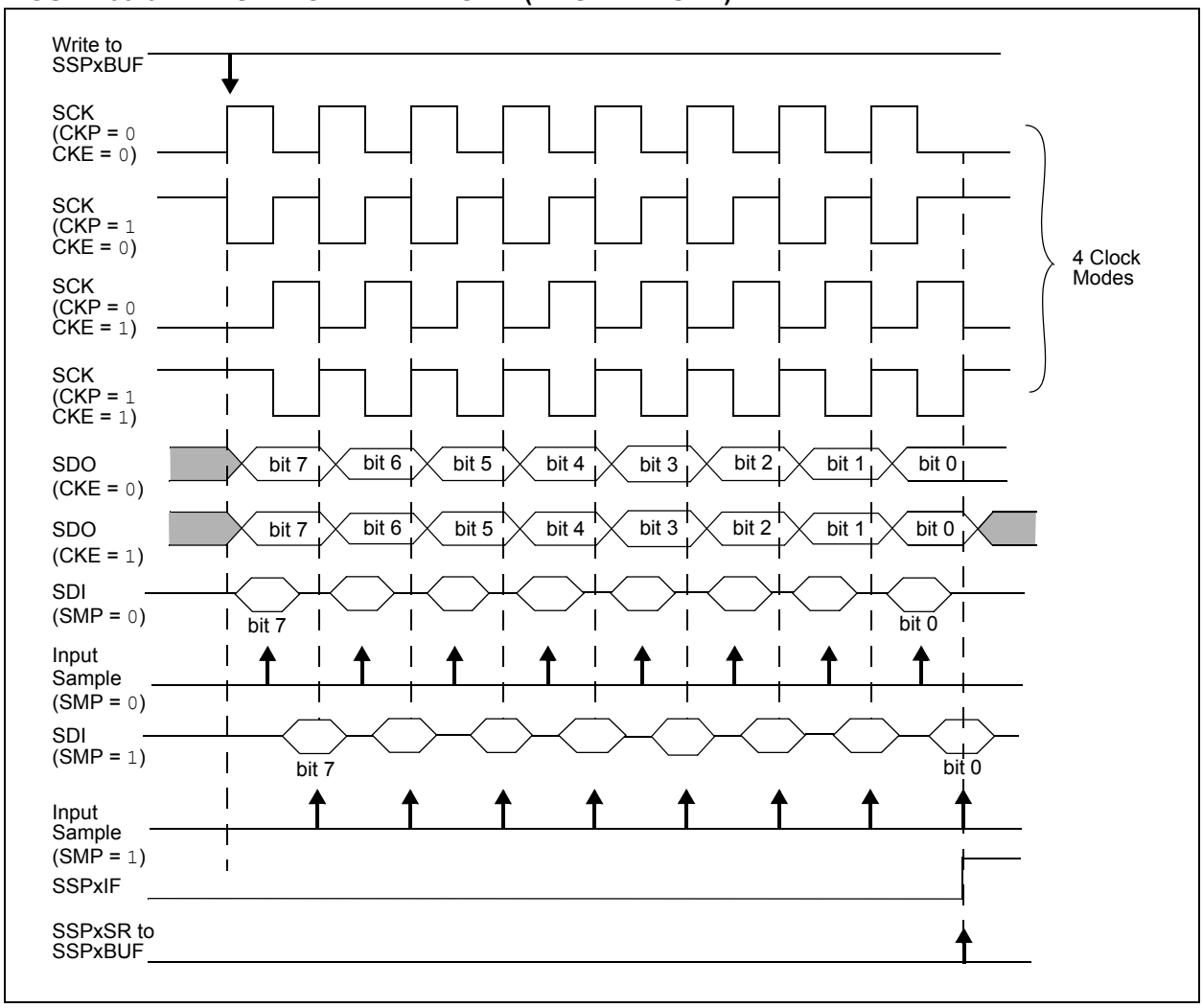

33.2.4 SPI SLAVE MODE

In Slave mode, the data is transmitted and received as external clock pulses appear on SCK. When the last bit is latched, the SSPxIF interrupt flag bit is set.

Before enabling the module in SPI Slave mode, the clock line must match the proper Idle state. The clock line can be observed by reading the SCK pin. The Idle state is determined by the CKP bit of the SSPxCON1 register.

While in Slave mode, the external clock is supplied by the external clock source on the SCK pin. This external clock must meet the minimum high and low times as specified in the electrical specifications.

While in Sleep mode, the slave can transmit/receive data. The shift register is clocked from the SCK pin input and when a byte is received, the device will generate an interrupt. If enabled, the device will wake-up from Sleep.

33.2.4.1 Daisy-Chain Configuration

The SPI bus can sometimes be connected in a daisy-chain configuration. The first slave output is connected to the second slave input, the second slave output is connected to the third slave input, and so on. The final slave output is connected to the master input. Each slave sends out, during a second group of clock pulses, an exact copy of what was received during the first group of clock pulses. The whole chain acts as one large communication shift register. The daisy-chain feature only requires a single Slave Select line from the master device.

Figure 33-7 shows the block diagram of a typical daisy-chain connection when operating in SPI mode.

In a daisy-chain configuration, only the most recent byte on the bus is required by the slave. Setting the BOEN bit of the SSPxCON3 register will enable writes to the SSPxBUF register, even if the previous byte has not been read. This allows the software to ignore data that may not apply to it.

33.2.5 SLAVE SELECT SYNCHRONIZATION

The Slave Select can also be used to synchronize communication. The Slave Select line is held high until the master device is ready to communicate. When the Slave Select line is pulled low, the slave knows that a new transmission is starting.

If the slave fails to receive the communication properly, it will be reset at the end of the transmission, when the Slave Select line returns to a high state. The slave is then ready to receive a new transmission when the Slave Select line is pulled low again. If the Slave Select line is not used, there is a risk that the slave will eventually become out of sync with the master. If the slave misses a bit, it will always be one bit off in future transmissions. Use of the Slave Select line allows the slave and master to align themselves at the beginning of each transmission.

The $\overline{SS}$ pin allows a Synchronous Slave mode. The SPI must be in Slave mode with $\overline{SS}$ pin control enabled (SSPxCON1<3:0> = `0100`).

When the $\overline{SS}$ pin is low, transmission and reception are enabled and the SDO pin is driven.

When the $\overline{SS}$ pin goes high, the SDO pin is no longer driven, even if in the middle of a transmitted byte and becomes a floating output. External pull-up/pull-down resistors may be desirable depending on the application.

> **Note 1:** When the SPI is in Slave mode with $\overline{SS}$ pin control enabled (SSPxCON1<3:0> = `0100`), the SPI module will reset if the $\overline{SS}$ pin is set to VDD.
>
> **2:** When the SPI is used in Slave mode with CKE set; the user must enable $\overline{SS}$ pin control.
>
> **3:** While operated in SPI Slave mode the SMP bit of the SSPxSTAT register must remain clear.

When the SPI module resets, the bit counter is forced to '`0`'. This can be done by either forcing the $\overline{SS}$ pin to a high level or clearing the SSPEN bit.

FIGURE 33-7: SPI DAISY-CHAIN CONNECTION

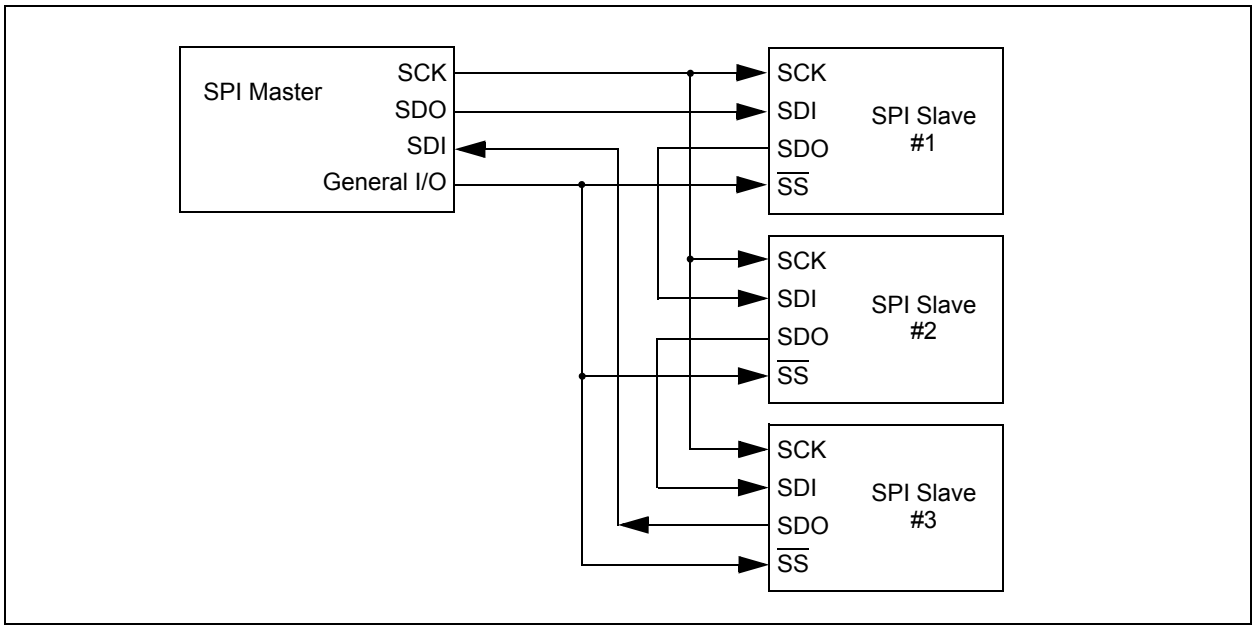

FIGURE 33-8: SLAVE SELECT SYNCHRONOUS WAVEFORM

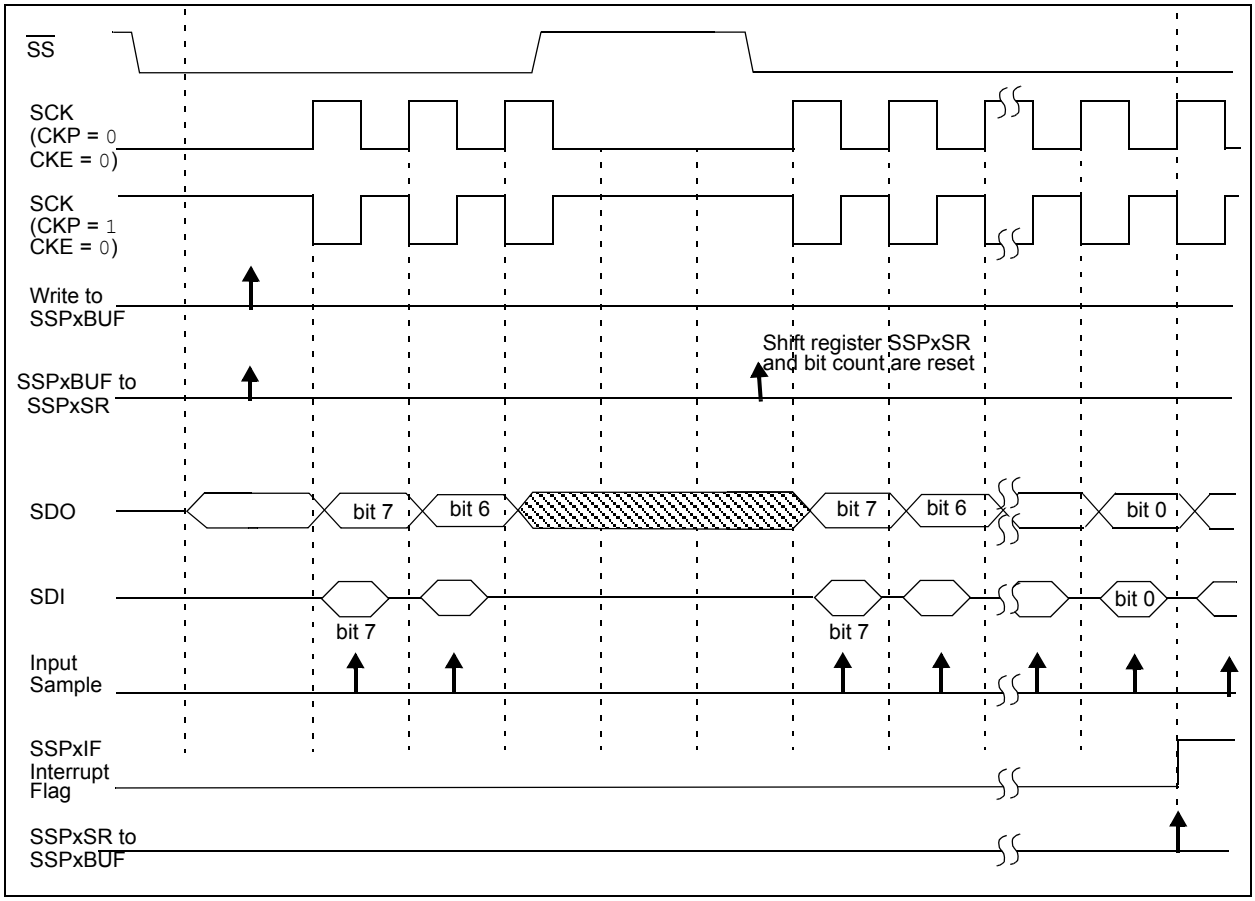

FIGURE 33-9: SPI MODE WAVEFORM (SLAVE MODE WITH CKE = 0)

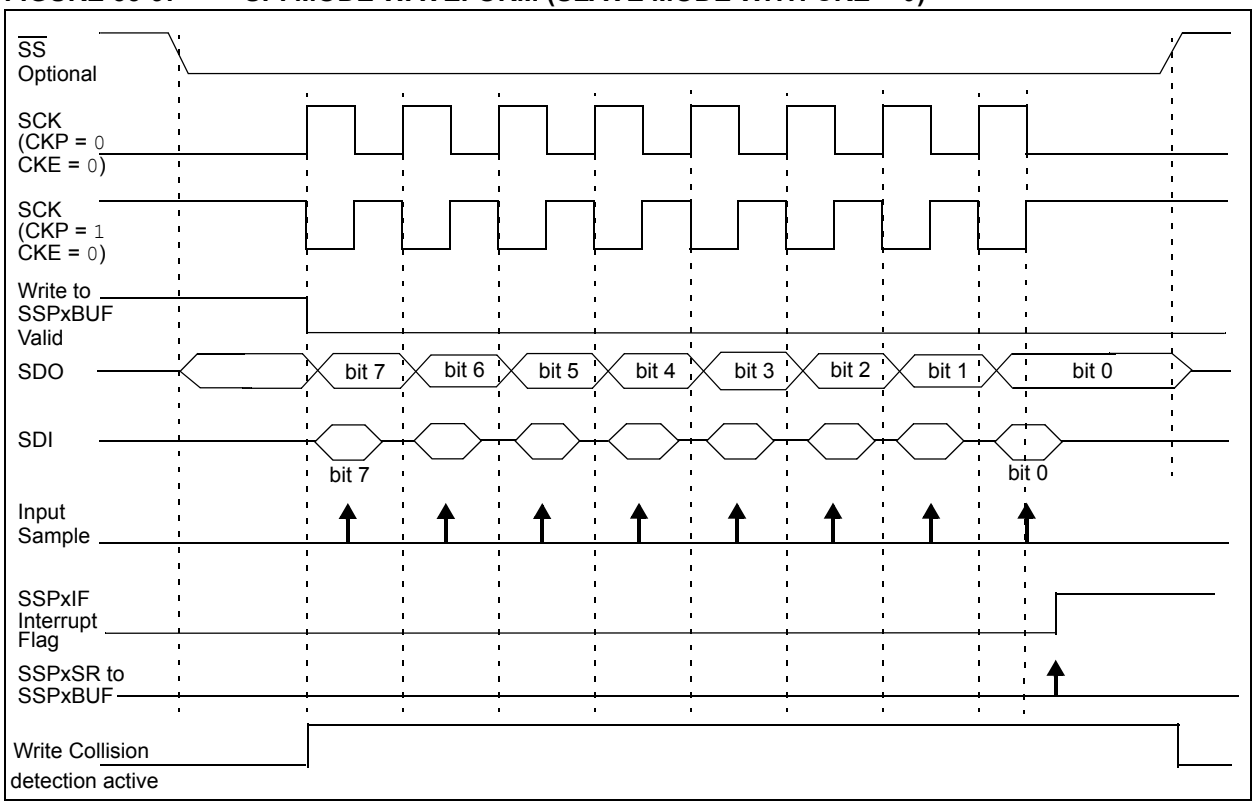

FIGURE 33-10: SPI MODE WAVEFORM (SLAVE MODE WITH CKE = 1)

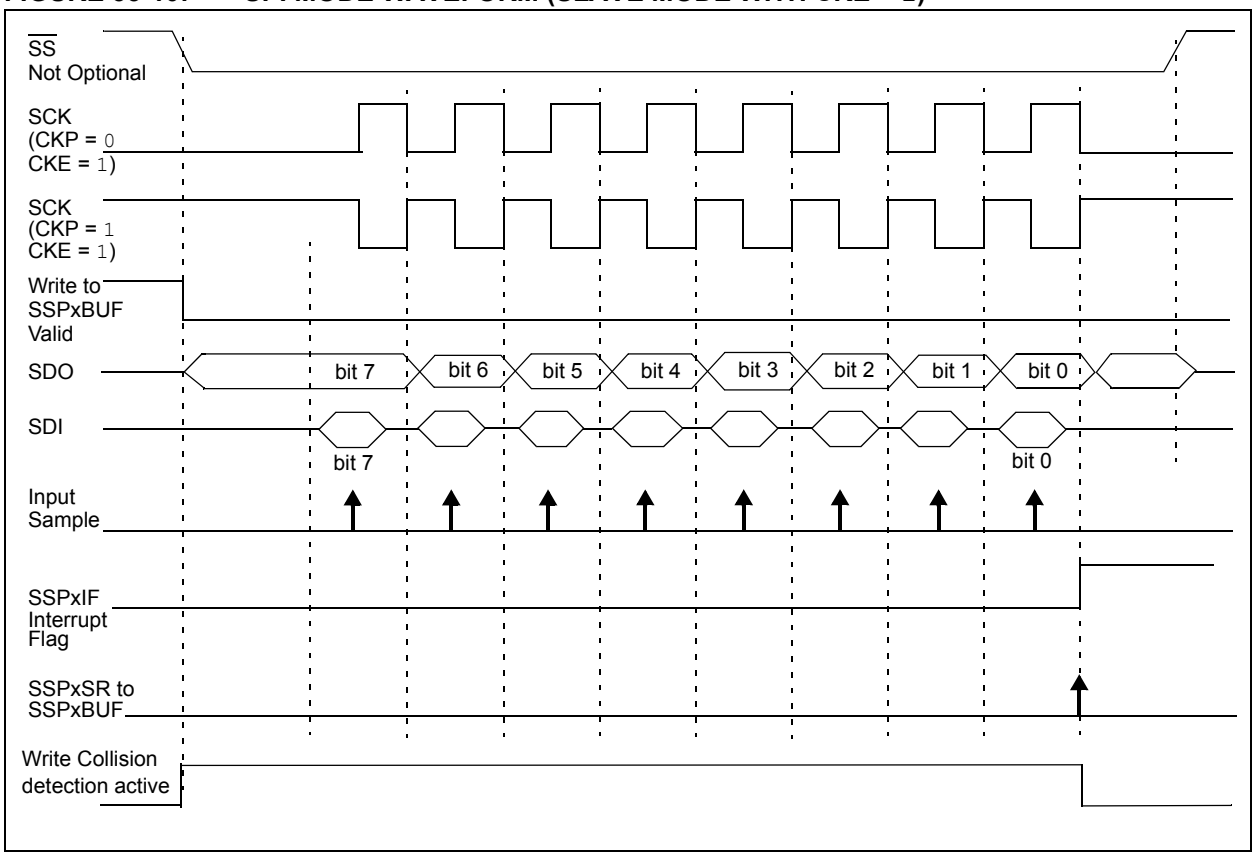

33.2.6 SPI OPERATION IN SLEEP MODE

In SPI Master mode, module clocks may be operating at a different speed than when in Full-Power mode; in the case of the Sleep mode, all clocks are halted.

In SPI Master mode, when the Sleep mode is selected, all module clocks are halted and the transmission/reception will remain in that state until the device wakes. After the device returns to Run mode, the module will resume transmitting and receiving data.

In SPI Slave mode, the SPI Transmit/Receive Shift register operates asynchronously to the device. This allows the device to be placed in Sleep mode and data to be shifted into the SPI Transmit/Receive Shift register. When all eight bits have been received, the MSSP interrupt flag bit will be set and if enabled, will wake the device.

33.3 I²C MODE OVERVIEW

The Inter-Integrated Circuit (I^2C) bus is a multi-master serial data communication bus. Devices communicate in a master/slave environment where the master devices initiate the communication. A slave device is controlled through addressing.

The I^2C bus specifies two signal connections:

- Serial Clock (SCL)
- Serial Data (SDA)

Figure 33-2 and Figure 33-3 shows the block diagram of the MSSP module when operating in I^2C mode.

Both the SCL and SDA connections are bidirectional open-drain lines, each requiring pull-up resistors for the supply voltage. Pulling the line to ground is considered a logical zero and letting the line float is considered a logical one.

Note:	When using designated I^2C pins, the associated pin values in INLVLx will be ignored.

Figure 33-11 shows a typical connection between two processors configured as master and slave devices.

The I^2C bus can operate with one or more master devices and one or more slave devices.

There are four potential modes of operation for a given device:

- Master Transmit mode
  (master is transmitting data to a slave)
- Master Receive mode
  (master is receiving data from a slave)
- Slave Transmit mode
  (slave is transmitting data to a master)
- Slave Receive mode
  (slave is receiving data from the master)

To begin communication, the master device sends out a Start condition followed by the address byte of the slave it intends to communicate with.

This is followed by a single Read/Write bit, which determines whether the master intends to transmit to or receive data from the slave device.

If the requested slave exists on the bus, it will respond with an Acknowledge bit, otherwise known as an $\overline{ACK}$. The master then continues to either transmit or receive data from the slave.

FIGURE 33-11: I²C MASTER/ SLAVE CONNECTION

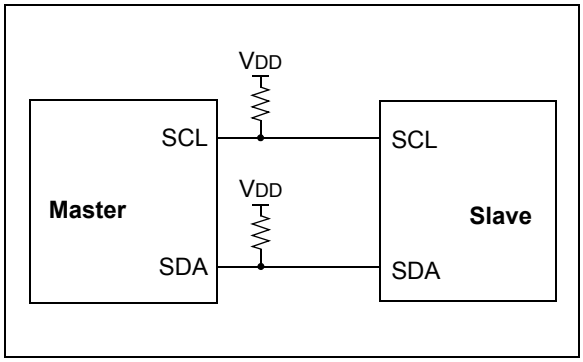

On the last byte of data communicated, the master device may end the transmission by sending a Stop bit. If the master device is in Receive mode, it sends the Stop condition in place of the last $\overline{ACK}$ bit. A Stop condition is indicated by a low-to-high transition of the SDA line while the SCL line is held high.

In some cases, the master may want to maintain control of the bus and re-initiate another transmission. If so, the master device may send Restart condition in place of the Stop condition.

33.3.1 CLOCK STRETCHING

When a slave device has not completed processing data, it can delay the transfer of more data through the process of clock stretching. An addressed slave device may hold the SCL clock line low after receiving or sending a bit, indicating that it is not yet ready to continue. The master that is communicating with the slave will attempt to raise the SCL line in order to transfer the next bit, but will detect that the clock line has not yet been released. Because the SCL connection is open-drain, the slave has the ability to hold that line low until it is ready to continue communicating.

Clock stretching allows receivers that cannot keep up with a transmitter to control the flow of incoming data.

33.3.2 ARBITRATION

Each master device must monitor the bus for Start and Stop bits. If the device detects that the bus is busy, it cannot begin a new message until the bus returns to an Idle state.

However, two master devices may try to initiate a transmission on or about the same time. When this occurs, the process of arbitration begins. Each transmitter checks the level of the SDA data line and compares it to the level that it expects to find. The first transmitter to observe that the two levels do not match, loses arbitration, and must stop transmitting on the SDA line.

For example, if one transmitter holds the SDA line to a logical one (lets it float) and a second transmitter holds it to a logical zero (pulls it low), the result is that the SDA line will be low. The first transmitter then observes that the level of the line is different than expected and concludes that another transmitter is communicating.

The first transmitter to notice this difference is the one that loses arbitration and must stop driving the SDA line. If this transmitter is also a master device, it also must stop driving the SCL line. It then can monitor the lines for a Stop condition before trying to reissue its transmission. In the meantime, the other device that has not noticed any difference between the expected and actual levels on the SDA line continues with its original transmission.

Slave Transmit mode can also be arbitrated, when a master addresses multiple slaves, but this is less common.

33.4 I^{2}C MODE OPERATION

All MSSP I^{2}C communication is byte oriented and shifted out MSb first. Six SFR registers and two interrupt flags interface the module with the PIC® microcontroller and user software. Two pins, SDA and SCL, are exercised by the module to communicate with other external I^{2}C devices.

33.4.1 BYTE FORMAT

All communication in I^{2}C is done in 9-bit segments. A byte is sent from a master to a slave or vice-versa, followed by an Acknowledge bit sent back. After the eighth falling edge of the SCL line, the device outputting data on the SDA changes that pin to an input and reads in an acknowledge value on the next clock pulse.

The clock signal, SCL, is provided by the master. Data is valid to change while the SCL signal is low, and sampled on the rising edge of the clock. Changes on the SDA line while the SCL line is high define special conditions on the bus, explained below.

33.4.2 DEFINITION OF I^{2}C TERMINOLOGY

There is language and terminology in the description of I^{2}C communication that have definitions specific to I^{2}C. That word usage is defined below and may be used in the rest of this document without explanation. This table was adapted from the Philips I^{2}C specification.

33.4.3 SDA AND SCL PINS

When selecting any I^{2}C mode, the SCL and SDA pins should be set by the user to inputs by setting the appropriate TRIS bits.

Note 1: Any device pin can be selected for SDA and SCL functions with the PPS peripheral. These functions are bidirectional. The SDA input is selected with the SSPDATPPS registers. The SCL input is selected with the SSPCLKPPS registers. Outputs are selected with the RxyPPS registers. It is the user's responsibility to make the selections so that both the input and the output for each function is on the same pin.

33.4.4 SDA HOLD TIME

The hold time of the SDA pin is selected by the SDAHT bit of the SSPxCON3 register. Hold time is the time SDA is held valid after the falling edge of SCL. Setting the SDAHT bit selects a longer 300 ns minimum hold time and may help on buses with large capacitance.

TABLE 33-1: I²C BUS TERMS

TERM	Description
Transmitter	The device which shifts data out onto the bus.
Receiver	The device which shifts data in from the bus.
Master	The device that initiates a transfer, generates clock signals and terminates a transfer.
Slave	The device addressed by the master.
Multi-master	A bus with more than one device that can initiate data transfers.
Arbitration	Procedure to ensure that only one master at a time controls the bus. Winning arbitration ensures that the message is not corrupted.
Synchronization	Procedure to synchronize the clocks of two or more devices on the bus.
Idle	No master is controlling the bus, and both SDA and SCL lines are high.
Active	Any time one or more master devices are controlling the bus.
Addressed Slave	Slave device that has received a matching address and is actively being clocked by a master.
Matching Address	Address byte that is clocked into a slave that matches the value stored in SSPxADD.
Write Request	Slave receives a matching address with R/$\overline{W}$ bit clear, and is ready to clock in data.
Read Request	Master sends an address byte with the R/$\overline{W}$ bit set, indicating that it wishes to clock data out of the Slave. This data is the next and all following bytes until a Restart or Stop.
Clock Stretching	When a device on the bus hold SCL low to stall communication.
Bus Collision	Any time the SDA line is sampled low by the module while it is outputting and expected high state.

33.4.5 START CONDITION

The I²C specification defines a Start condition as a transition of SDA from a high to a low state while SCL line is high. A Start condition is always generated by the master and signifies the transition of the bus from an Idle to an Active state. Figure 33-12 shows wave forms for Start and Stop conditions.

33.4.6 STOP CONDITION

A Stop condition is a transition of the SDA line from low-to-high state while the SCL line is high.

> **Note:** At least one SCL low time must appear before a Stop is valid, therefore, if the SDA line goes low then high again while the SCL line stays high, only the Start condition is detected.

33.4.7 RESTART CONDITION

A Restart is valid any time that a Stop would be valid. A master can issue a Restart if it wishes to hold the bus after terminating the current transfer. A Restart has the same effect on the slave that a Start would, resetting all slave logic and preparing it to clock in an address. The master may want to address the same or another slave. Figure 33-13 shows the wave form for a Restart condition.

In 10-bit Addressing Slave mode a Restart is required for the master to clock data out of the addressed slave. Once a slave has been fully addressed, matching both high and low address bytes, the master can issue a Restart and the high address byte with the R/$\overline{W}$ bit set. The slave logic will then hold the clock and prepare to clock out data.

33.4.8 START/STOP CONDITION INTERRUPT MASKING

The SCIE and PCIE bits of the SSPxCON3 register can enable the generation of an interrupt in Slave modes that do not typically support this function. Slave modes where interrupt on Start and Stop detect are already enabled, these bits will have no effect.

FIGURE 33-12: I²C START AND STOP CONDITIONS

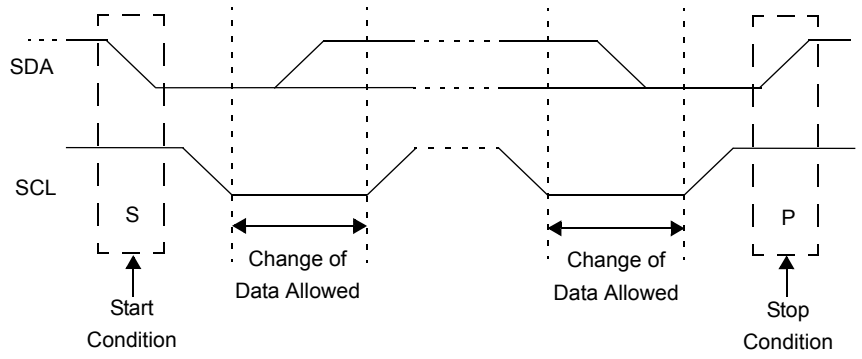

FIGURE 33-13: I²C RESTART CONDITION

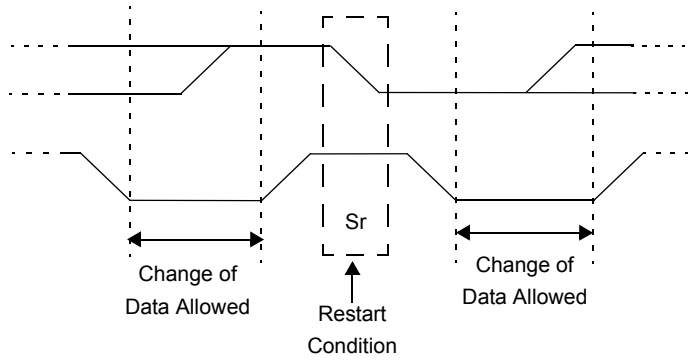

33.4.9 ACKNOWLEDGE SEQUENCE

The 9th SCL pulse for any transferred byte in I²C is dedicated as an Acknowledge. It allows receiving devices to respond back to the transmitter by pulling the SDA line low. The transmitter must release control of the line during this time to shift in the response. The Acknowledge ($\overline{ACK}$) is an active-low signal, pulling the SDA line low indicates to the transmitter that the device has received the transmitted data and is ready to receive more.

The result of an $\overline{ACK}$ is placed in the ACKSTAT bit of the SSPxCON2 register.

Slave software, when the AHEN and DHEN bits are set, the clock is stretched, allowing the slave time to change the ACK value before it is sent back to the transmitter. The ACKDT bit of the SSPxCON2 register is set/cleared to determine the response.

There are certain conditions where an $\overline{ACK}$ will not be sent by the slave. If the BF bit of the SSPxSTAT register or the SSPOV bit of the SSPxCON1 register are set when a byte is received.

When the module is addressed, after the eighth falling edge of SCL on the bus, the ACKTIM bit of the SSPxCON3 register is set. The ACKTIM bit indicates the acknowledge time of the active bus. The ACKTIM Status bit is only active when the AHEN bit or DHEN bit is enabled.

33.5 I²C SLAVE MODE OPERATION

The MSSP Slave mode operates in one of four modes selected by the SSPM bits of SSPxCON1 register. The modes can be divided into 7-bit and 10-bit Addressing mode. 10-bit Addressing modes operate the same as 7-bit with some additional overhead for handling the larger addresses.

Modes with Start and Stop bit interrupts operate the same as the other modes with SSPxIF additionally getting set upon detection of a Start, Restart, or Stop condition.

33.5.1 SLAVE MODE ADDRESSES

The SSPxADD register (Register 33-6) contains the Slave mode address. The first byte received after a Start or Restart condition is compared against the value stored in this register. If the byte matches, the value is loaded into the SSPxBUF register and an interrupt is generated. If the value does not match, the module goes idle and no indication is given to the software that anything happened.

The SSP Mask register (Register 33-5) affects the address matching process. See **Section 33.5.9 "SSP Mask Register"** for more information.

33.5.1.1 I²C Slave 7-bit Addressing Mode

In 7-bit Addressing mode, the LSb of the received data byte is ignored when determining if there is an address match.

33.5.1.2 I²C Slave 10-bit Addressing Mode

In 10-bit Addressing mode, the first received byte is compared to the binary value of '1 1 1 1 0 A9 A8 0'. A9 and A8 are the two MSb's of the 10-bit address and stored in bits 2 and 1 of the SSPxADD register.

After the acknowledge of the high byte the UA bit is set and SCL is held low until the user updates SSPxADD with the low address. The low address byte is clocked in and all eight bits are compared to the low address value in SSPxADD. Even if there is not an address match; SSPxIF and UA are set, and SCL is held low until SSPxADD is updated to receive a high byte again. When SSPxADD is updated the UA bit is cleared. This ensures the module is ready to receive the high address byte on the next communication.

A high and low address match as a write request is required at the start of all 10-bit addressing communication. A transmission can be initiated by issuing a Restart once the slave is addressed, and clocking in the high address with the R/$\overline{W}$ bit set. The slave hardware will then acknowledge the read request and prepare to clock out data. This is only valid for a slave after it has received a complete high and low address byte match.

33.5.2 SLAVE RECEPTION

When the R/$\overline{W}$ bit of a matching received address byte is clear, the R/$\overline{W}$ bit of the SSPxSTAT register is cleared. The received address is loaded into the SSPxBUF register and acknowledged.

When the overflow condition exists for a received address, then not Acknowledge is given. An overflow condition is defined as either bit BF of the SSPxSTAT register is set, or bit SSPOV of the SSPxCON1 register is set. The BOEN bit of the SSPxCON3 register modifies this operation. For more information see Register 33-4.

An MSSP interrupt is generated for each transferred data byte. Flag bit, SSPxIF, must be cleared by software.

When the SEN bit of the SSPxCON2 register is set, SCL will be held low (clock stretch) following each received byte. The clock must be released by setting the CKP bit of the SSPxCON1 register.

33.5.2.1 7-bit Addressing Reception

This section describes a standard sequence of events for the MSSP module configured as an I²C slave in 7-bit Addressing mode. Figure 33-14 and Figure 33-15 is used as a visual reference for this description.

This is a step by step process of what typically must be done to accomplish I²C communication.

1. Start bit detected.
2. S bit of SSPxSTAT is set; SSPxIF is set if interrupt on Start detect is enabled.
3. Matching address with R/$\overline{W}$ bit clear is received.
4. The slave pulls SDA low sending an $\overline{ACK}$ to the master, and sets SSPxIF bit.
5. Software clears the SSPxIF bit.
6. Software reads received address from SSPxBUF clearing the BF flag.
7. If SEN = `1`; Slave software sets CKP bit to release the SCL line.
8. The master clocks out a data byte.
9. Slave drives SDA low sending an $\overline{ACK}$ to the master, and sets SSPxIF bit.
10. Software clears SSPxIF.
11. Software reads the received byte from SSPxBUF clearing BF.
12. Steps 8-12 are repeated for all received bytes from the master.
13. Master sends Stop condition, setting P bit of SSPxSTAT, and the bus goes idle.

33.5.2.2 7-bit Reception with AHEN and DHEN

Slave device reception with AHEN and DHEN set operate the same as without these options with extra interrupts and clock stretching added after the eighth falling edge of SCL. These additional interrupts allow time for the slave software to decide whether it wants to $\overline{\text{ACK}}$ the receive address or data byte.

This list describes the steps that need to be taken by slave software to use these options for I^2C communication. Figure 33-16 displays a module using both address and data holding. Figure 33-17 includes the operation with the SEN bit of the SSPxCON2 register set.

1. S bit of SSPxSTAT is set; SSPxIF is set if interrupt on Start detect is enabled.
2. Matching address with R/$\overline{\text{W}}$ bit clear is clocked in. SSPxIF is set and CKP cleared after the eighth falling edge of SCL.
3. Slave clears the SSPxIF.
4. Slave can look at the ACKTIM bit of the SSPxCON3 register to determine if the SSPxIF was after or before the $\overline{\text{ACK}}$.
5. Slave reads the address value from SSPxBUF, clearing the BF flag.
6. Slave sets $\overline{\text{ACK}}$ value clocked out to the master by setting ACKDT.
7. Slave releases the clock by setting CKP.
8. SSPxIF is set after an $\overline{\text{ACK}}$, not after a NACK.
9. If SEN = `1` the slave hardware will stretch the clock after the $\overline{\text{ACK}}$.
10. Slave clears SSPxIF.

> **Note:** SSPxIF is still set after the ninth falling edge of SCL even if there is no clock stretching and BF has been cleared. Only if NACK is sent to master is SSPxIF not set

11. SSPxIF set and CKP cleared after eighth falling edge of SCL for a received data byte.
12. Slave looks at ACKTIM bit of SSPxCON3 to determine the source of the interrupt.
13. Slave reads the received data from SSPxBUF clearing BF.
14. Steps 7-14 are the same for each received data byte.
15. Communication is ended by either the slave sending an $\overline{\text{ACK}}$ = `1`, or the master sending a Stop condition. If a Stop is sent and Interrupt on Stop Detect is disabled, the slave will only know by polling the P bit of the SSPxSTAT register.

FIGURE 33-14: I²C SLAVE, 7-BIT ADDRESS, RECEPTION (SEN = 0, AHEN = 0, DHEN = 0)

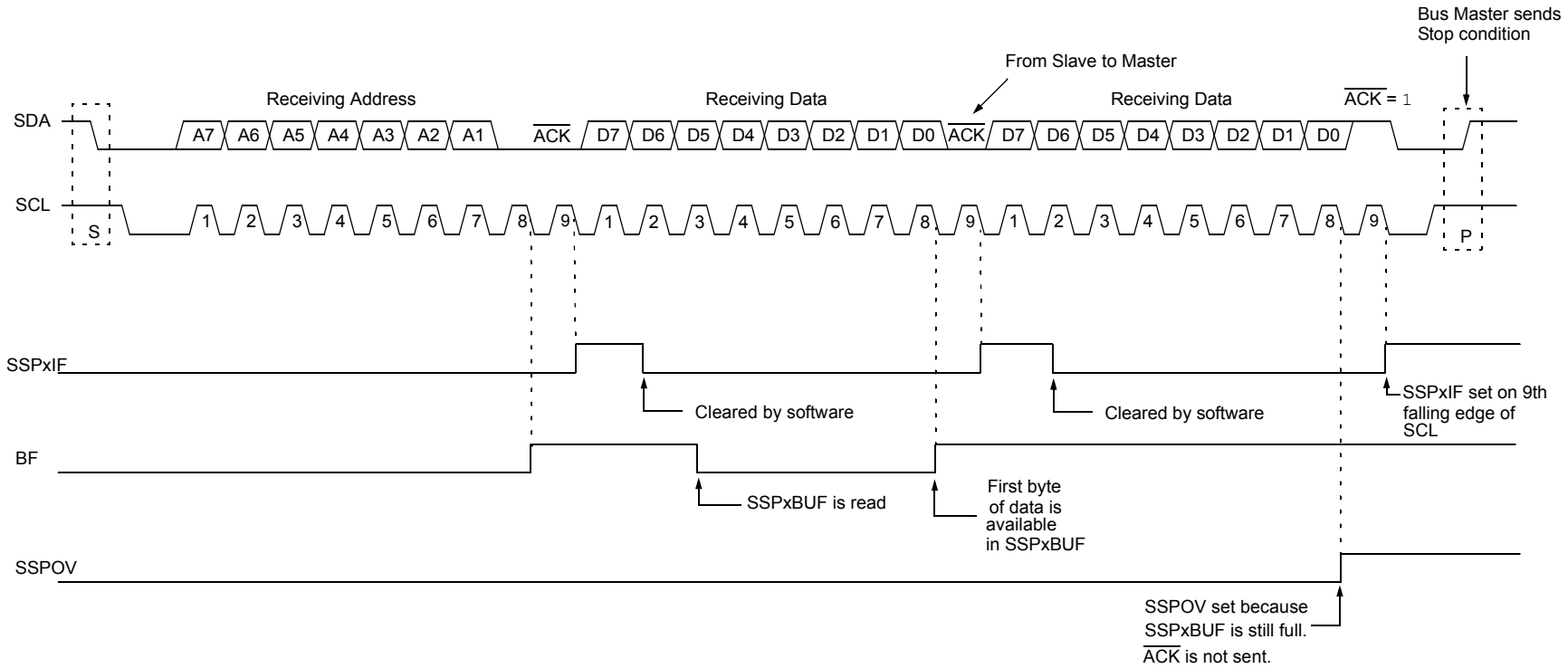

© 2017-2019 Microchip Technology Inc.

FIGURE 33-15: I²C SLAVE, 7-BIT ADDRESS, RECEPTION (SEN = 1, AHEN = 0, DHEN = 0)

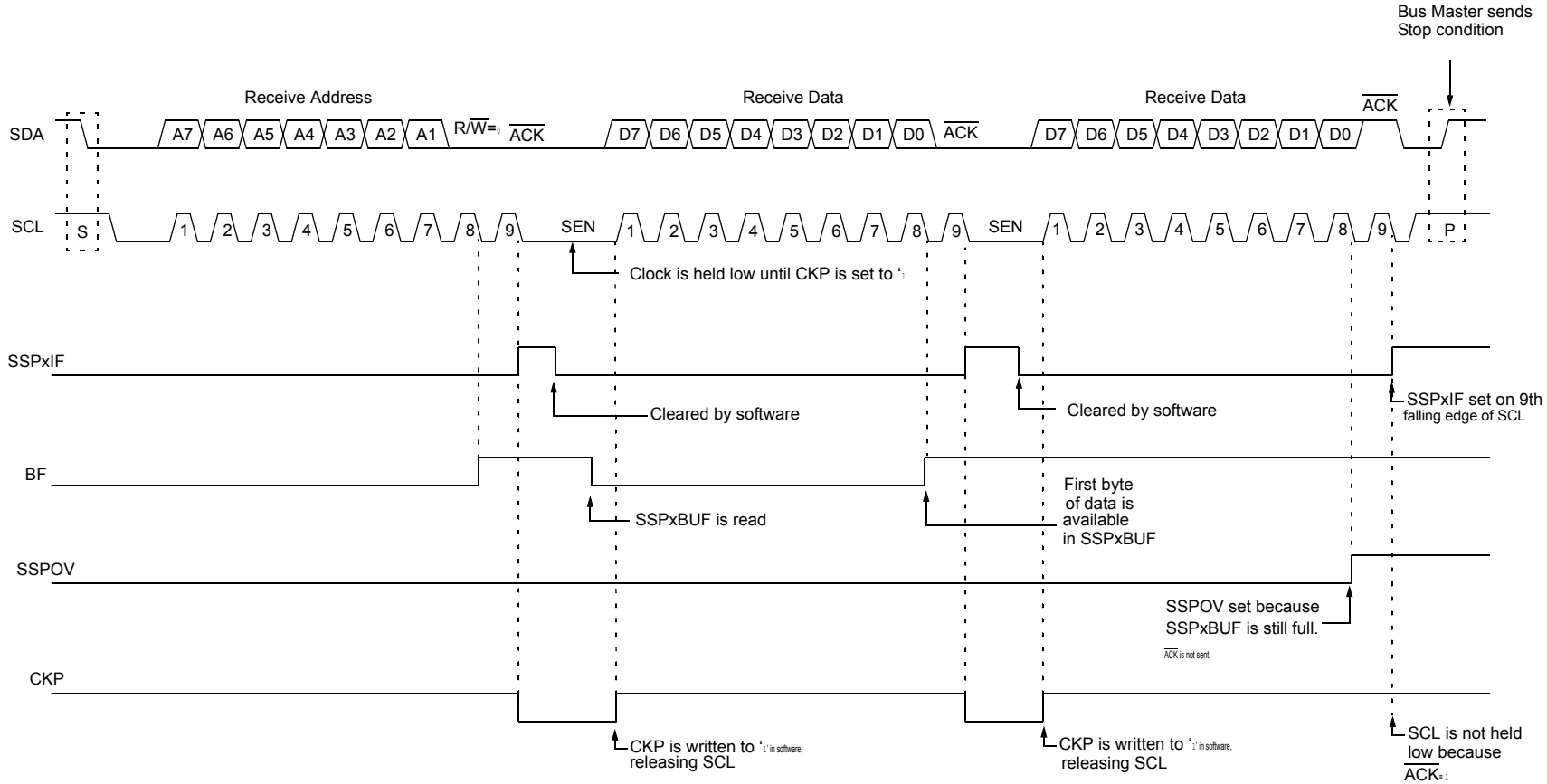

© 2017-2019 Microchip Technology Inc.

FIGURE 33-16: I²C SLAVE, 7-BIT ADDRESS, RECEPTION (SEN = 0, AHEN = 1, DHEN = 1)

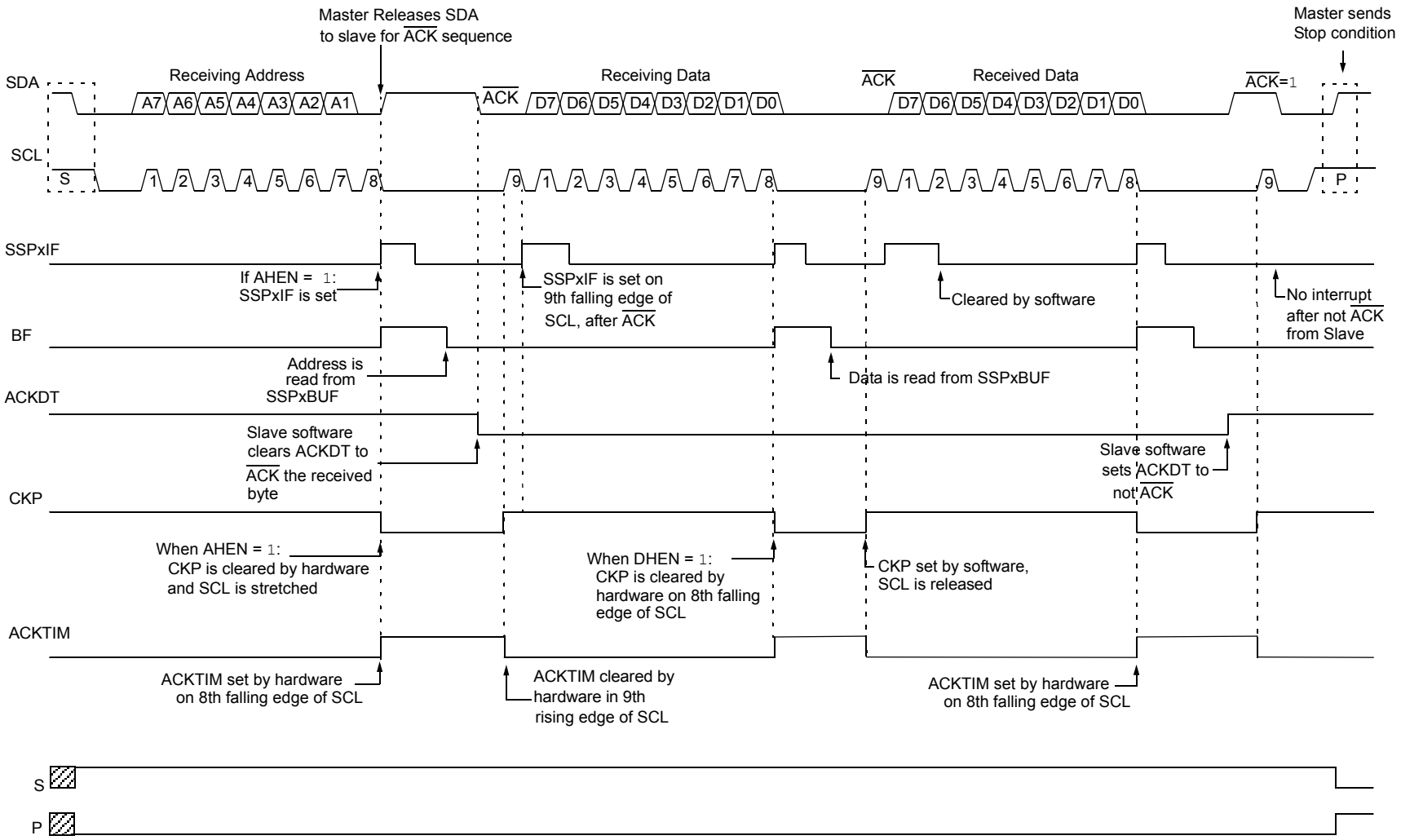

© 2017-2019 Microchip Technology Inc.

FIGURE 33-17: I²C SLAVE, 7-BIT ADDRESS, RECEPTION (SEN = 1, AHEN = 1, DHEN = 1)

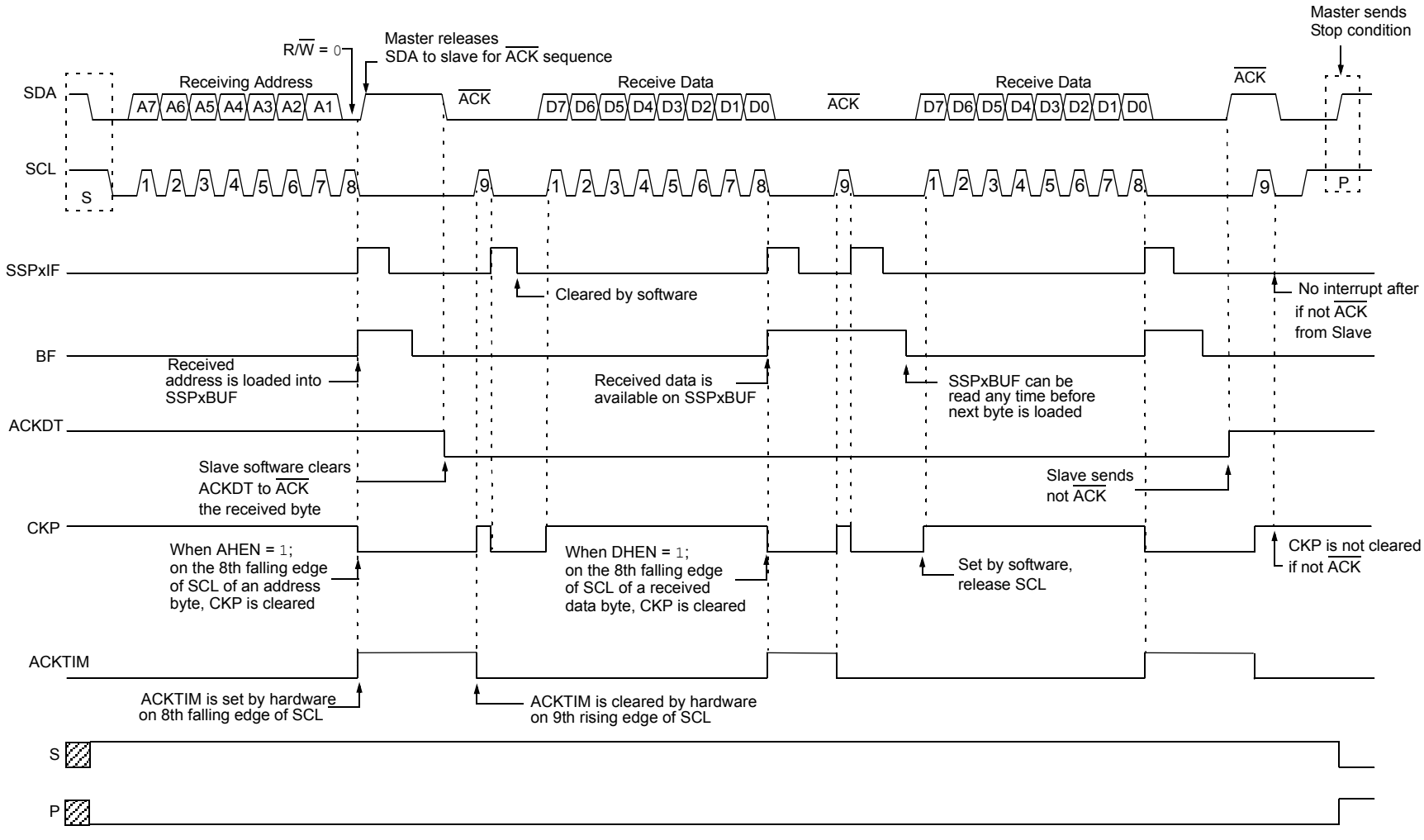

© 2017-2019 Microchip Technology Inc.

33.5.3 SLAVE TRANSMISSION

When the R/$\overline{W}$ bit of the incoming address byte is set and an address match occurs, the R/$\overline{W}$ bit of the SSPxSTAT register is set. The received address is loaded into the SSPxBUF register, and an $\overline{ACK}$ pulse is sent by the slave on the ninth bit.

Following the $\overline{ACK}$, slave hardware clears the CKP bit and the SCL pin is held low (see **Section 33.5.6 "Clock Stretching"** for more detail). By stretching the clock, the master will be unable to assert another clock pulse until the slave is done preparing the transmit data.

The transmit data must be loaded into the SSPxBUF register which also loads the SSPxSR register. Then the SCL pin should be released by setting the CKP bit of the SSPxCON1 register. The eight data bits are shifted out on the falling edge of the SCL input. This ensures that the SDA signal is valid during the SCL high time.

The $\overline{ACK}$ pulse from the master-receiver is latched on the rising edge of the ninth SCL input pulse. This $\overline{ACK}$ value is copied to the ACKSTAT bit of the SSPxCON2 register. If ACKSTAT is set (not $\overline{ACK}$), then the data transfer is complete. When the not $\overline{ACK}$ is latched by the slave, the slave goes idle and waits for another occurrence of the Start bit. If the SDA line was low ($\overline{ACK}$), the next transmit data must be loaded into the SSPxBUF register. Again, the SCL pin must be released by setting bit CKP.

An MSSP interrupt is generated for each data transfer byte. The SSPxIF bit must be cleared by software and the SSPxSTAT register is used to determine the status of the byte. The SSPxIF bit is set on the falling edge of the ninth clock pulse.

33.5.3.1 Slave Mode Bus Collision

A slave receives a read request and begins shifting data out on the SDA line. If a bus collision is detected and the SBCDE bit of the SSPxCON3 register is set, the BCL1IF bit of the PIR3 register is set. Once a bus collision is detected, the slave goes idle and waits to be addressed again. User software can use the BCL1IF bit to handle a slave bus collision.

33.5.3.2 7-bit Transmission

A master device can transmit a read request to a slave, and then clock data out of the slave. The list below outlines what software for a slave will need to do to accomplish a standard transmission. Figure 33-18 can be used as a reference to this list.

1. Master sends a Start condition on SDA and SCL.
2. S bit of SSPxSTAT is set; SSPxIF is set if interrupt on Start detect is enabled.
3. Matching address with R/$\overline{W}$ bit set is received by the Slave setting SSPxIF bit.
4. Slave hardware generates an $\overline{ACK}$ and sets SSPxIF.
5. SSPxIF bit is cleared by user.
6. Software reads the received address from SSPxBUF, clearing BF.
7. R/$\overline{W}$ is set so CKP was automatically cleared after the $\overline{ACK}$.
8. The slave software loads the transmit data into SSPxBUF.
9. CKP bit is set releasing SCL, allowing the master to clock the data out of the slave.
10. SSPxIF is set after the $\overline{ACK}$ response from the master is loaded into the ACKSTAT register.
11. SSPxIF bit is cleared.
12. The slave software checks the ACKSTAT bit to see if the master wants to clock out more data.

Note 1: If the master $\overline{ACK}$s the clock will be stretched.

2: ACKSTAT is the only bit updated on the rising edge of SCL (9th) rather than the falling.

13. Steps 9-13 are repeated for each transmitted byte.
14. If the master sends a not $\overline{ACK}$; the clock is not held, but SSPxIF is still set.
15. The master sends a Restart condition or a Stop.
16. The slave is no longer addressed.

FIGURE 33-18: I²C SLAVE, 7-BIT ADDRESS, TRANSMISSION (AHEN = 0)

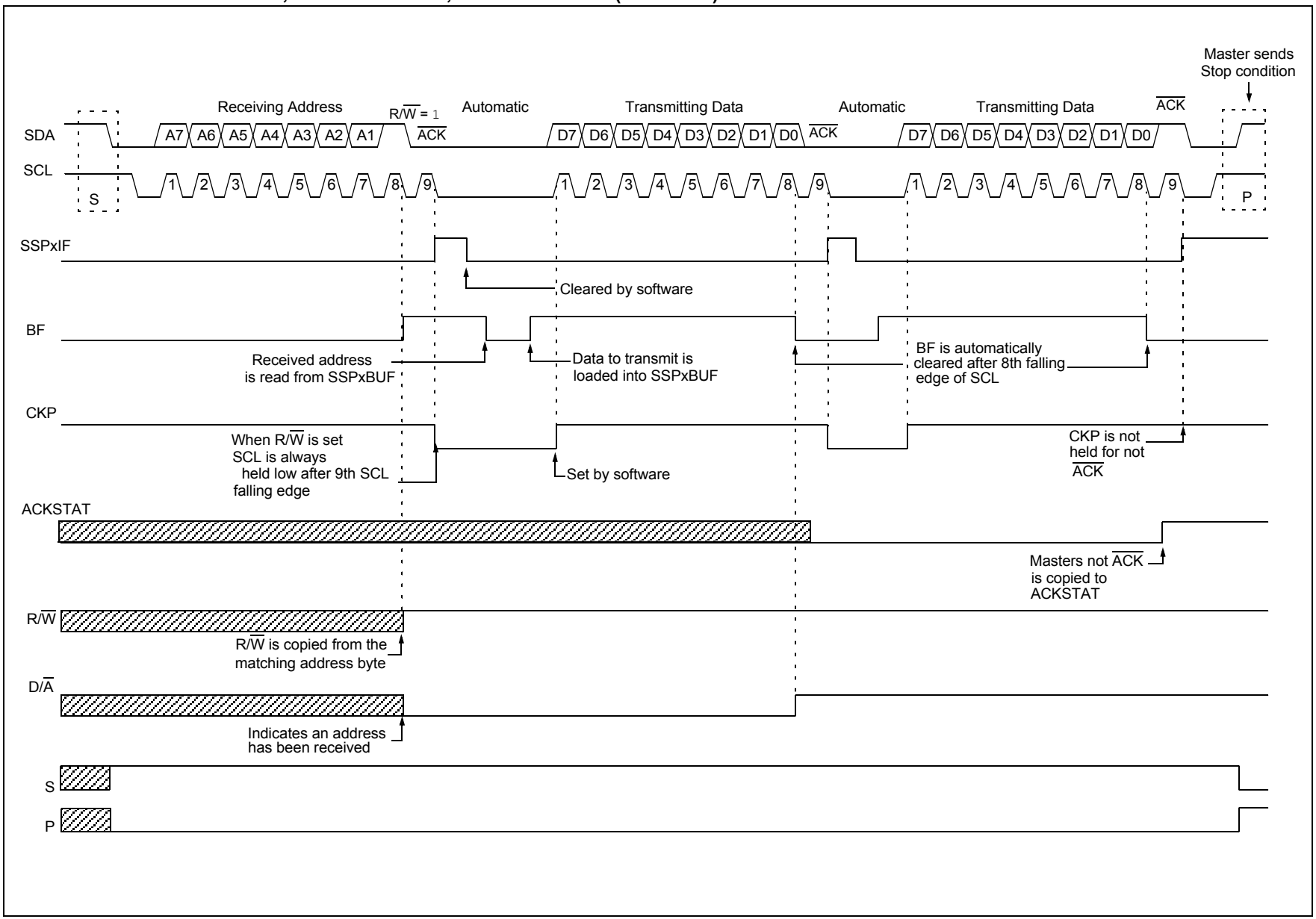

© 2017-2019 Microchip Technology Inc.

33.5.3.3 7-bit Transmission with Address Hold Enabled

Setting the AHEN bit of the SSPxCON3 register enables additional clock stretching and interrupt generation after the eighth falling edge of a received matching address. Once a matching address has been clocked in, CKP is cleared and the SSPxIF interrupt is set.

Figure 33-19 displays a standard waveform of a 7-bit address slave transmission with AHEN enabled.

1. Bus starts Idle.
2. Master sends Start condition; the S bit of SSPxSTAT is set; SSPxIF is set if interrupt on Start detect is enabled.
3. Master sends matching address with R/$\overline{W}$ bit set. After the eighth falling edge of the SCL line the CKP bit is cleared and SSPxIF interrupt is generated.
4. Slave software clears SSPxIF.
5. Slave software reads ACKTIM bit of SSPxCON3 register, and R/$\overline{W}$ and D/$\overline{A}$ of the SSPxSTAT register to determine the source of the interrupt.
6. Slave reads the address value from the SSPxBUF register clearing the BF bit.
7. Slave software decides from this information if it wishes to $\overline{ACK}$ or not $\overline{ACK}$ and sets the ACKDT bit of the SSPxCON2 register accordingly.
8. Slave sets the CKP bit releasing SCL.
9. Master clocks in the $\overline{ACK}$ value from the slave.
10. Slave hardware automatically clears the CKP bit and sets SSPxIF after the $\overline{ACK}$ if the R/$\overline{W}$ bit is set.
11. Slave software clears SSPxIF.
12. Slave loads value to transmit to the master into SSPxBUF setting the BF bit.

> **Note:** SSPxBUF cannot be loaded until after the $\overline{ACK}$.

13. Slave sets the CKP bit releasing the clock.
14. Master clocks out the data from the slave and sends an $\overline{ACK}$ value on the ninth SCL pulse.
15. Slave hardware copies the $\overline{ACK}$ value into the ACKSTAT bit of the SSPxCON2 register.
16. Steps 10-15 are repeated for each byte transmitted to the master from the slave.
17. If the master sends a not $\overline{ACK}$ the slave releases the bus allowing the master to send a Stop and end the communication.

> **Note:** Master must send a not $\overline{ACK}$ on the last byte to ensure that the slave releases the SCL line to receive a Stop.

FIGURE 33-19: I²C SLAVE, 7-BIT ADDRESS, TRANSMISSION (AHEN = 1)

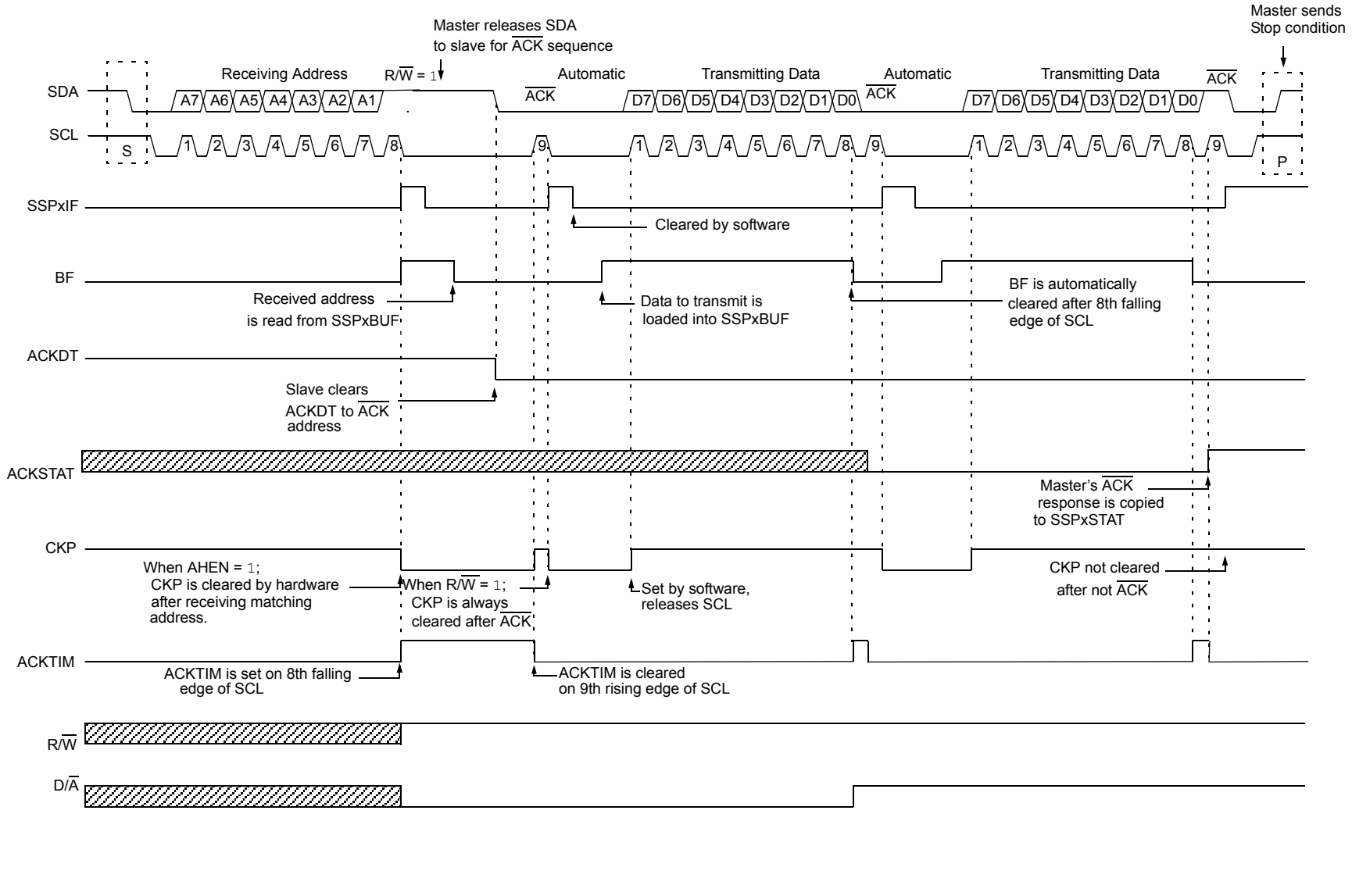

© 2017-2019 Microchip Technology Inc.

33.5.4 SLAVE MODE 10-BIT ADDRESS RECEPTION

This section describes a standard sequence of events for the MSSP module configured as an I^2C slave in 10-bit Addressing mode.

Figure 33-20 is used as a visual reference for this description.

This is a step by step process of what must be done by slave software to accomplish I^2C communication.

1. Bus starts Idle.
2. Master sends Start condition; S bit of SSPxSTAT is set; SSPxIF is set if interrupt on Start detect is enabled.
3. Master sends matching high address with R/$\overline{W}$ bit clear; UA bit of the SSPxSTAT register is set.
4. Slave sends $\overline{ACK}$ and SSPxIF is set.
5. Software clears the SSPxIF bit.
6. Software reads received address from SSPxBUF clearing the BF flag.
7. Slave loads low address into SSPxADD, releasing SCL.
8. Master sends matching low address byte to the slave; UA bit is set.

> **Note:** Updates to the SSPxADD register are not allowed until after the $\overline{ACK}$ sequence.

9. Slave sends $\overline{ACK}$ and SSPxIF is set.

> **Note:** If the low address does not match, SSPxIF and UA are still set so that the slave software can set SSPxADD back to the high address. BF is not set because there is no match. CKP is unaffected.

10. Slave clears SSPxIF.
11. Slave reads the received matching address from SSPxBUF clearing BF.
12. Slave loads high address into SSPxADD.
13. Master clocks a data byte to the slave and clocks out the slaves $\overline{ACK}$ on the ninth SCL pulse; SSPxIF is set.
14. If SEN bit of SSPxCON2 is set, CKP is cleared by hardware and the clock is stretched.
15. Slave clears SSPxIF.
16. Slave reads the received byte from SSPxBUF clearing BF.
17. If SEN is set the slave sets CKP to release the SCL.
18. Steps 13-17 repeat for each received byte.
19. Master sends Stop to end the transmission.

33.5.5 10-BIT ADDRESSING WITH ADDRESS OR DATA HOLD

Reception using 10-bit addressing with AHEN or DHEN set is the same as with 7-bit modes. The only difference is the need to update the SSPxADD register using the UA bit. All functionality, specifically when the CKP bit is cleared and SCL line is held low are the same. Figure 33-21 can be used as a reference of a slave in 10-bit addressing with AHEN set.

Figure 33-22 shows a standard waveform for a slave transmitter in 10-bit Addressing mode.

FIGURE 33-20: I²C SLAVE, 10-BIT ADDRESS, RECEPTION (SEN = 1, AHEN = 0, DHEN = 0)

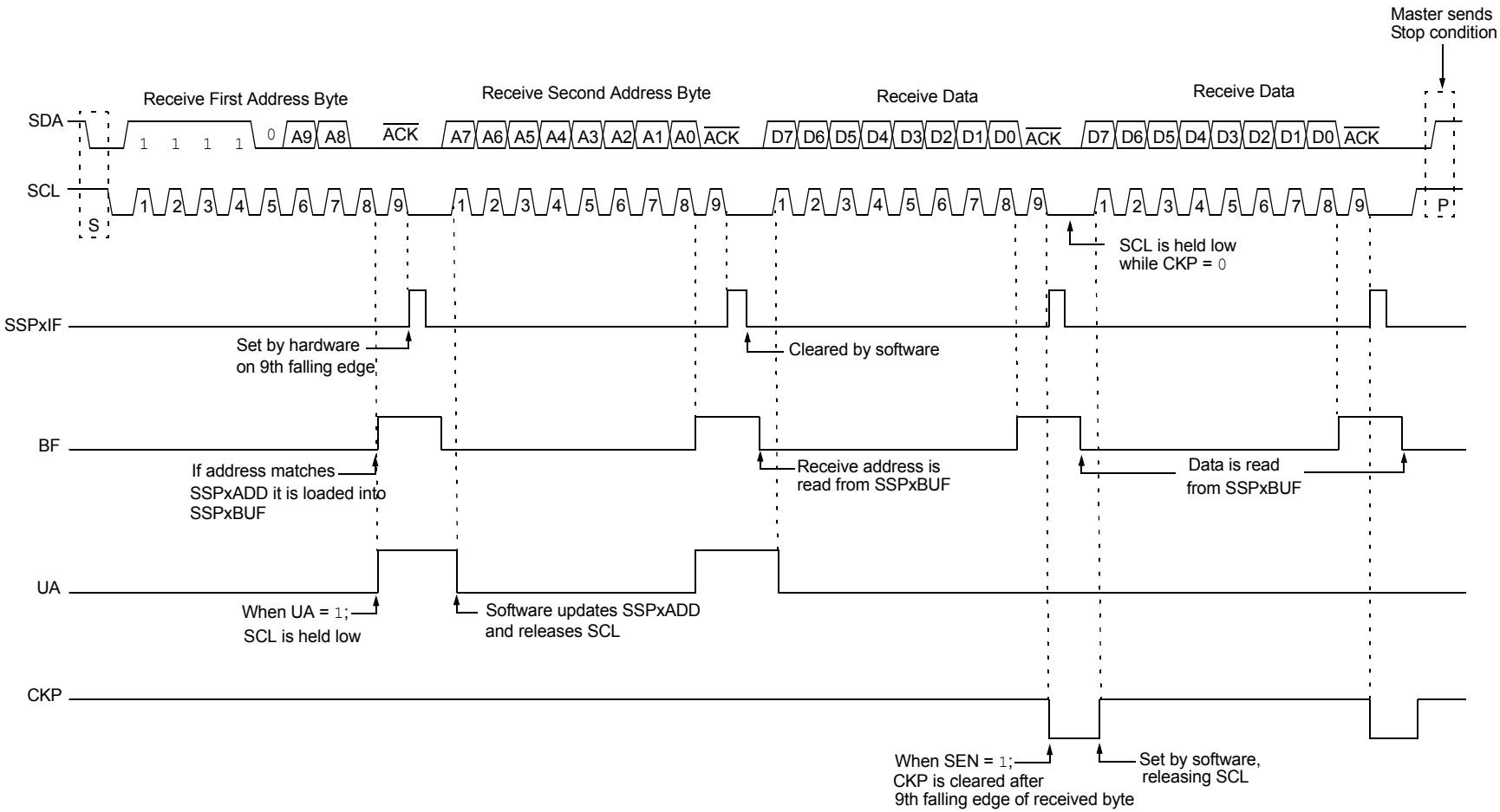

© 2017-2019 Microchip Technology Inc.

FIGURE 33-21: I²C SLAVE, 10-BIT ADDRESS, RECEPTION (SEN = 0, AHEN = 1, DHEN = 0)

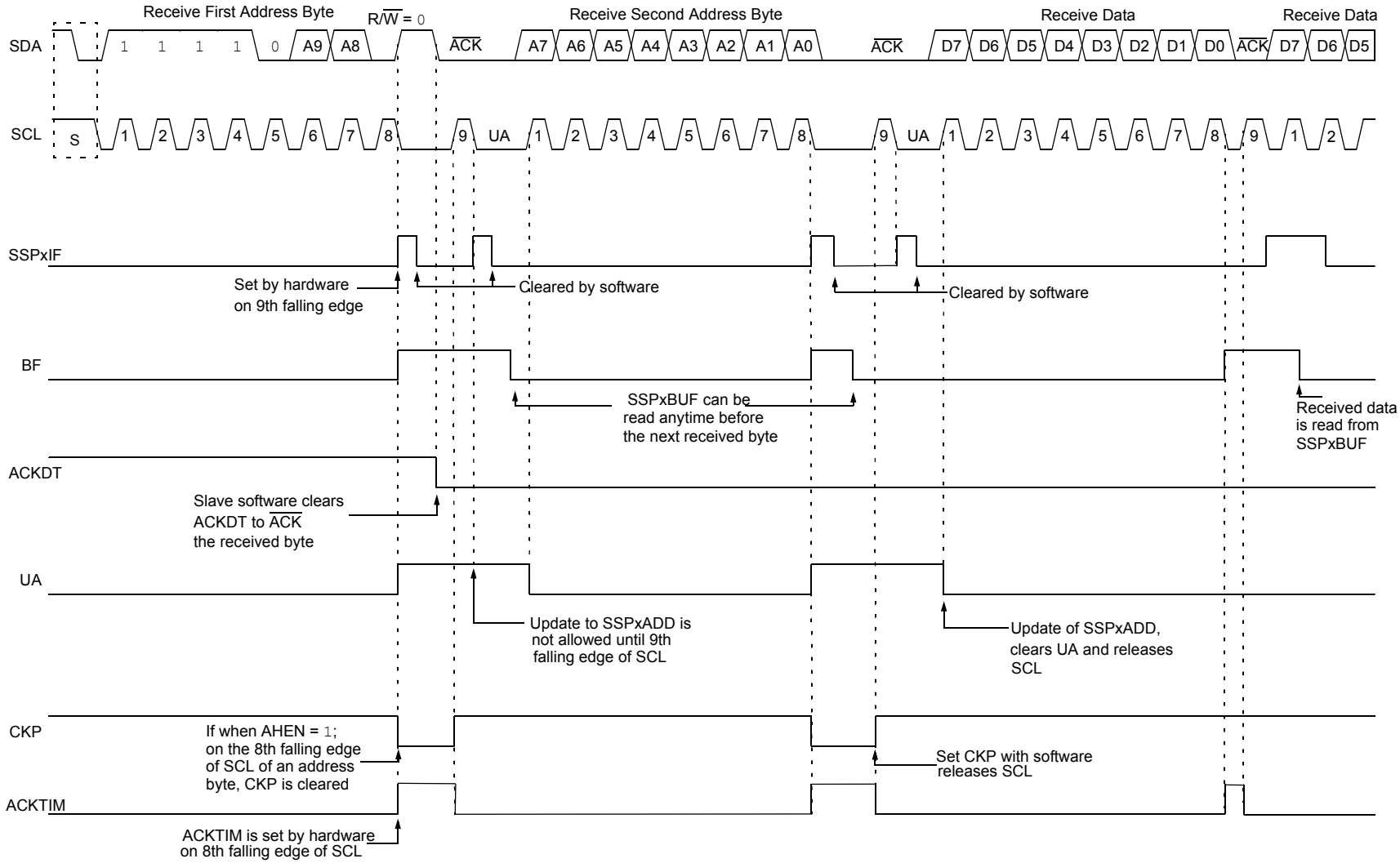

© 2017-2019 Microchip Technology Inc.

FIGURE 33-22: I²C SLAVE, 10-BIT ADDRESS, TRANSMISSION (SEN = 0, AHEN = 0, DHEN = 0)

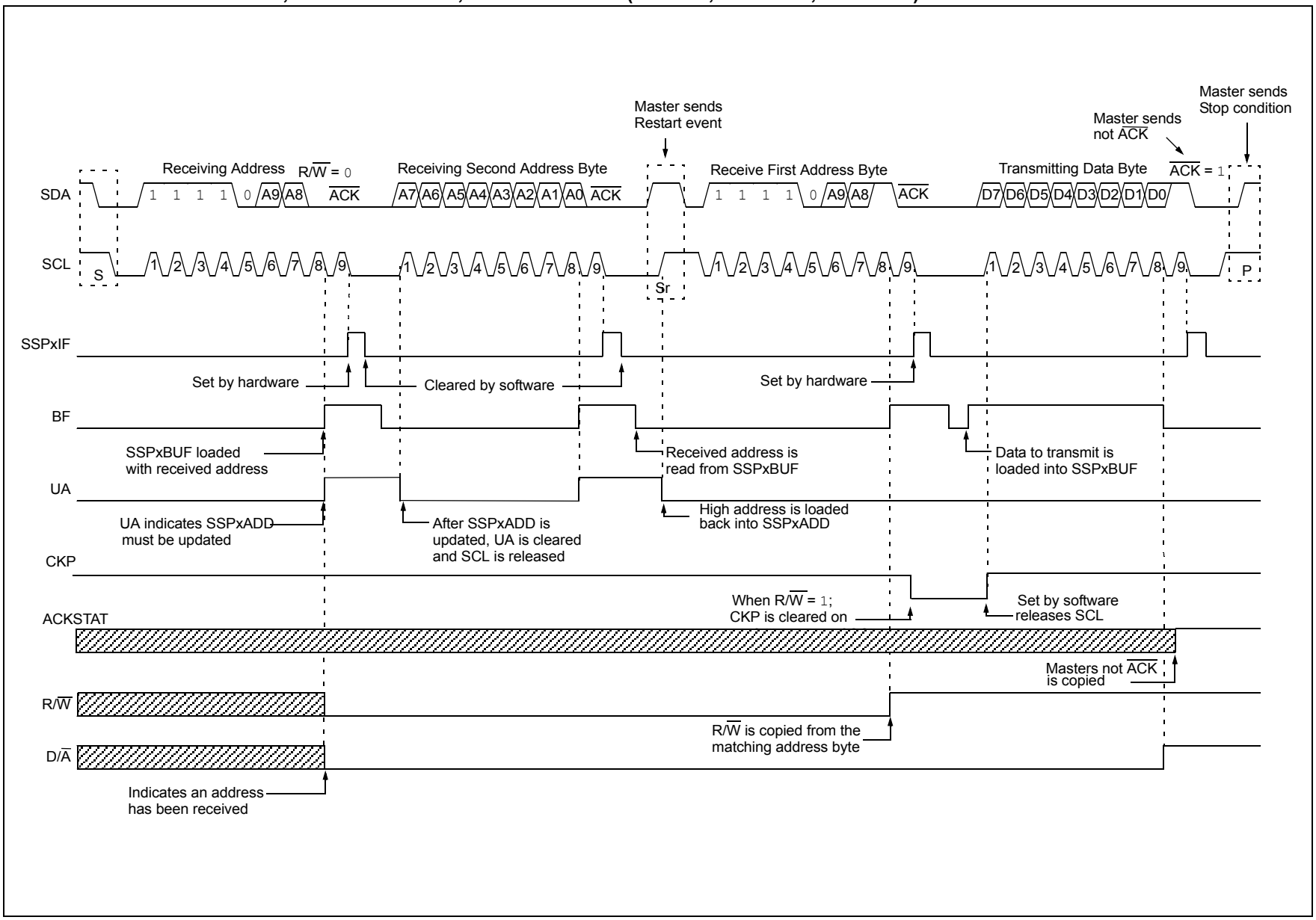

© 2017-2019 Microchip Technology Inc.

33.5.6 CLOCK STRETCHING

Clock stretching occurs when a device on the bus holds the SCL line low, effectively pausing communication. The slave may stretch the clock to allow more time to handle data or prepare a response for the master device. A master device is not concerned with stretching as anytime it is active on the bus and not transferring data it is stretching. Any stretching done by a slave is invisible to the master software and handled by the hardware that generates SCL.

The CKP bit of the SSPxCON1 register is used to control stretching in software. Any time the CKP bit is cleared, the module will wait for the SCL line to go low and then hold it. Setting CKP will release SCL and allow more communication.

33.5.6.1 Normal Clock Stretching

Following an $\overline{\text{ACK}}$ if the R/$\overline{\text{W}}$ bit of SSPxSTAT is set, a read request, the slave hardware will clear CKP. This allows the slave time to update SSPxBUF with data to transfer to the master. If the SEN bit of SSPxCON2 is set, the slave hardware will always stretch the clock after the $\overline{\text{ACK}}$ sequence. Once the slave is ready; CKP is set by software and communication resumes.

33.5.6.2 10-bit Addressing Mode

In 10-bit Addressing mode, when the UA bit is set the clock is always stretched. This is the only time the SCL is stretched without CKP being cleared. SCL is released immediately after a write to SSPxADD.

33.5.6.3 Byte NACKing

When AHEN bit of SSPxCON3 is set; CKP is cleared by hardware after the eighth falling edge of SCL for a received matching address byte. When DHEN bit of SSPxCON3 is set; CKP is cleared after the eighth falling edge of SCL for received data.

Stretching after the eighth falling edge of SCL allows the slave to look at the received address or data and decide if it wants to ACK the received data.

33.5.7 CLOCK SYNCHRONIZATION AND THE CKP BIT

Any time the CKP bit is cleared, the module will wait for the SCL line to go low and then hold it. However, clearing the CKP bit will not assert the SCL output low until the SCL output is already sampled low. Therefore, the CKP bit will not assert the SCL line until an external I^2C master device has already asserted the SCL line. The SCL output will remain low until the CKP bit is set and all other devices on the I^2C bus have released SCL. This ensures that a write to the CKP bit will not violate the minimum high time requirement for SCL (see Figure 33-23).

FIGURE 33-23: CLOCK SYNCHRONIZATION TIMING

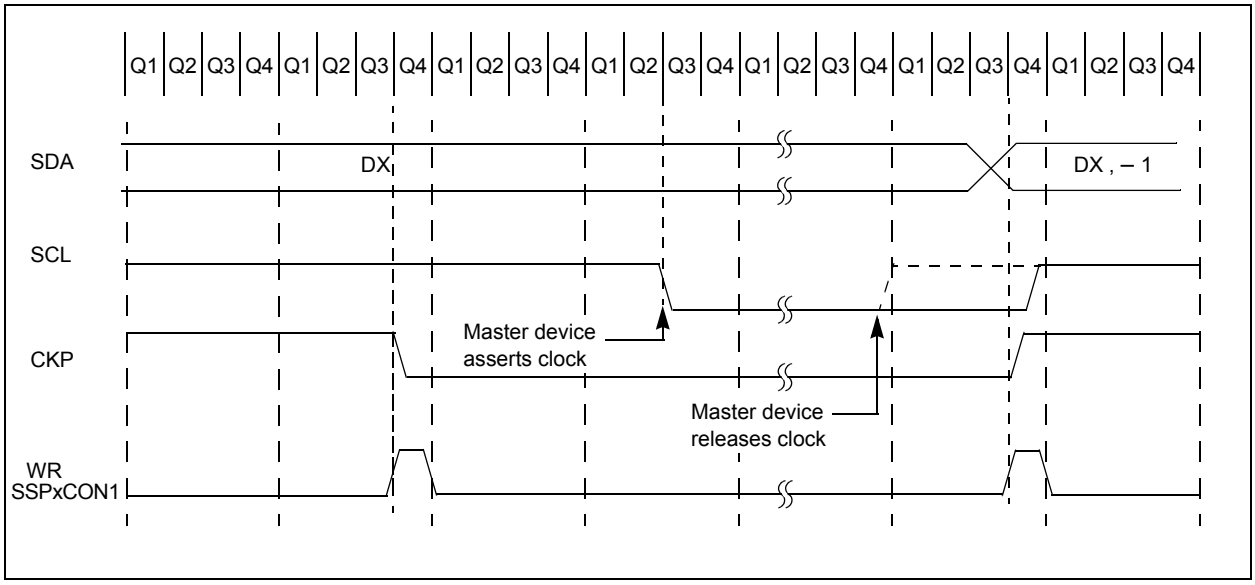

33.5.8 GENERAL CALL ADDRESS SUPPORT

The addressing procedure for the I²C bus is such that the first byte after the Start condition usually determines which device will be the slave addressed by the master device. The exception is the general call address which can address all devices. When this address is used, all devices should, in theory, respond with an acknowledge.

The general call address is a reserved address in the I²C protocol, defined as address `0x00`. When the GCEN bit of the SSPxCON2 register is set, the slave module will automatically $\overline{\text{ACK}}$ the reception of this address regardless of the value stored in SSPxADD. After the slave clocks in an address of all zeros with the R/$\overline{\text{W}}$ bit clear, an interrupt is generated and slave software can read SSPxBUF and respond. Figure 33-24 shows a general call reception sequence.

In 10-bit Address mode, the UA bit will not be set on the reception of the general call address. The slave will prepare to receive the second byte as data, just as it would in 7-bit mode.

If the AHEN bit of the SSPxCON3 register is set, just as with any other address reception, the slave hardware will stretch the clock after the eighth falling edge of SCL. The slave must then set its ACKDT value and release the clock with communication progressing as it would normally.

FIGURE 33-24: SLAVE MODE GENERAL CALL ADDRESS SEQUENCE

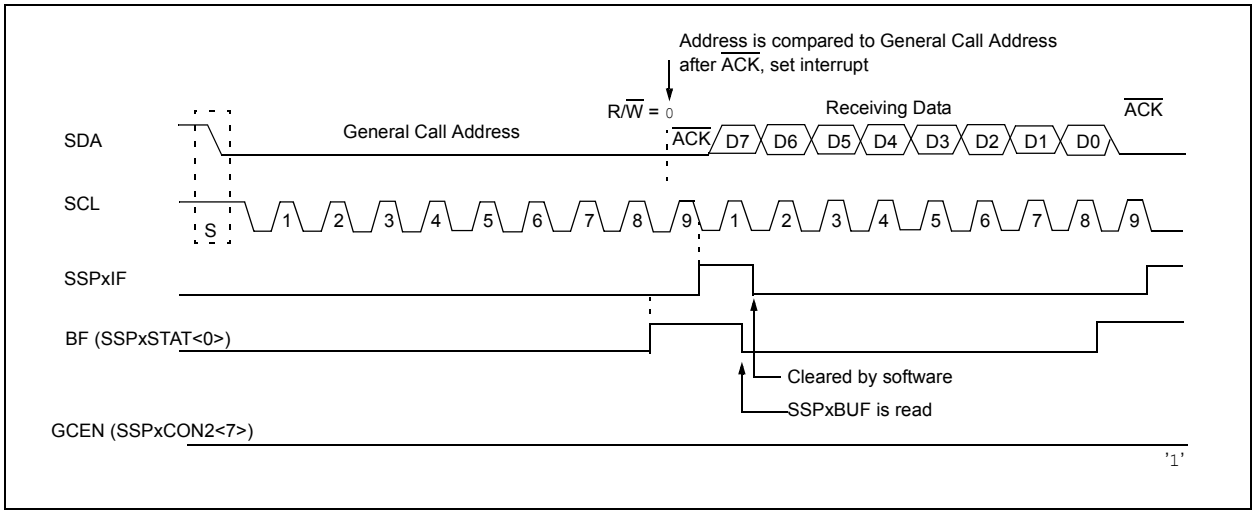

33.5.9 SSP MASK REGISTER

An SSP Mask (SSPxMSK) register (Register 33-5) is available in I²C Slave mode as a mask for the value held in the SSPxSR register during an address comparison operation. A zero (‘`0`’) bit in the SSPxMSK register has the effect of making the corresponding bit of the received address a “don’t care”.

This register is reset to all ‘`1`’s upon any Reset condition and, therefore, has no effect on standard SSP operation until written with a mask value.

The SSP Mask register is active during:

- 7-bit Address mode: address compare of A<7:1>.
- 10-bit Address mode: address compare of A<7:0> only. The SSP mask has no effect during the reception of the first (high) byte of the address.

33.6 I²C Master Mode

Master mode is enabled by setting and clearing the appropriate SSPM bits in the SSPxCON1 register and by setting the SSPEN bit. In Master mode, the SDA and SCK pins must be configured as inputs. The MSSP peripheral hardware will override the output driver TRIS controls when necessary to drive the pins low.

Master mode of operation is supported by interrupt generation on the detection of the Start and Stop conditions. The Stop (P) and Start (S) bits are cleared from a Reset or when the MSSP module is disabled. Control of the I²C bus may be taken when the P bit is set, or the bus is Idle.

In Firmware Controlled Master mode, user code conducts all I²C bus operations based on Start and Stop bit condition detection. Start and Stop condition detection is the only active circuitry in this mode. All other communication is done by the user software directly manipulating the SDA and SCL lines.

The following events will cause the SSP Interrupt Flag bit, SSPxIF, to be set (SSP interrupt, if enabled):

- Start condition generated
- Stop condition generated
- Data transfer byte transmitted/received
- Acknowledge transmitted/received
- Repeated Start generated

Note 1: The MSSP module, when configured in I²C Master mode, does not allow queuing of events. For instance, the user is not allowed to initiate a Start condition and immediately write the SSPxBUF register to initiate transmission before the Start condition is complete. In this case, the SSPxBUF will not be written to and the WCOL bit will be set, indicating that a write to the SSPxBUF did not occur

2: When in Master mode, Start/Stop detection is masked and an interrupt is generated when the SEN/PEN bit is cleared and the generation is complete.

33.6.1 I²C MASTER MODE OPERATION

The master device generates all of the serial clock pulses and the Start and Stop conditions. A transfer is ended with a Stop condition or with a Repeated Start condition. Since the Repeated Start condition is also the beginning of the next serial transfer, the I²C bus will not be released.

In Master Transmitter mode, serial data is output through SDA, while SCL outputs the serial clock. The first byte transmitted contains the slave address of the receiving device (7 bits) and the Read/Write (R/$\overline{W}$) bit. In this case, the R/$\overline{W}$ bit will be logic ‘0’. Serial data is transmitted eight bits at a time. After each byte is transmitted, an Acknowledge bit is received. Start and Stop conditions are output to indicate the beginning and the end of a serial transfer.

In Master Receive mode, the first byte transmitted contains the slave address of the transmitting device (7 bits) and the R/$\overline{W}$ bit. In this case, the R/$\overline{W}$ bit will be logic ‘1’. Thus, the first byte transmitted is a 7-bit slave address followed by a ‘1’ to indicate the receive bit. Serial data is received via SDA, while SCL outputs the serial clock. Serial data is received eight bits at a time. After each byte is received, an Acknowledge bit is transmitted. Start and Stop conditions indicate the beginning and end of transmission.

A Baud Rate Generator is used to set the clock frequency output on SCL. See **Section 33.7 “Baud Rate Generator”** for more detail.

33.6.2 CLOCK ARBITRATION

Clock arbitration occurs when the master, during any receive, transmit or Repeated Start/Stop condition, releases the SCL pin (SCL allowed to float high). When the SCL pin is allowed to float high, the Baud Rate Generator (BRG) is suspended from counting until the SCL pin is actually sampled high. When the SCL pin is sampled high, the Baud Rate Generator is reloaded with the contents of SSPxADD<7:0> and begins counting. This ensures that the SCL high time will always be at least one BRG rollover count in the event that the clock is held low by an external device (Figure 33-25).

FIGURE 33-25: BAUD RATE GENERATOR TIMING WITH CLOCK ARBITRATION

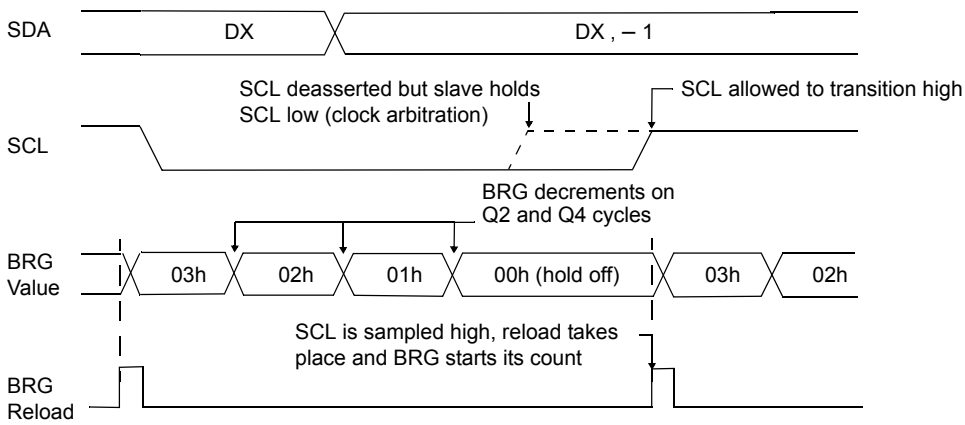

33.6.3 WCOL STATUS FLAG

If the user writes the SSPxBUF when a Start, Restart, Stop, Receive or Transmit sequence is in progress, the WCOL is set and the contents of the buffer are unchanged (the write does not occur). Any time the WCOL bit is set it indicates that an action on SSPxBUF was attempted while the module was not idle.

Note:	Because queuing of events is not allowed, writing to the lower five bits of SSPxCON2 is disabled until the Start condition is complete.

33.6.4 I²C MASTER MODE START CONDITION TIMING

To initiate a Start condition (Figure 33-26), the user sets the Start Enable bit, SEN bit of the SSPxCON2 register. If the SDA and SCL pins are sampled high, the Baud Rate Generator is reloaded with the contents of SSPxADD<7:0> and starts its count. If SCL and SDA are both sampled high when the Baud Rate Generator times out (TBRG), the SDA pin is driven low. The action of the SDA being driven low while SCL is high is the Start condition and causes the S bit of the SSPxSTAT1 register to be set. Following this, the Baud Rate Generator is reloaded with the contents of SSPxADD<7:0> and resumes its count. When the Baud Rate Generator times out (TBRG), the SEN bit of the SSPxCON2 register will be automatically cleared by hardware; the Baud Rate Generator is suspended, leaving the SDA line held low and the Start condition is complete.

Note 1: If at the beginning of the Start condition, the SDA and SCL pins are already sampled low, or if during the Start condition, the SCL line is sampled low before the SDA line is driven low, a bus collision occurs, the Bus Collision Interrupt Flag, BCLIF, is set, the Start condition is aborted and the I²C module is reset into its Idle state.

2: The Philips I²C specification states that a bus collision cannot occur on a Start.

FIGURE 33-26: FIRST START BIT TIMING

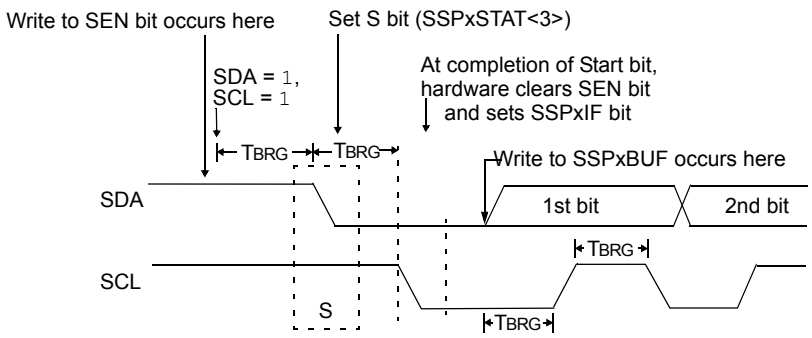

33.6.5 I²C MASTER MODE REPEATED START CONDITION TIMING

A Repeated Start condition (Figure 33-27) occurs when the RSEN bit of the SSPxCON2 register is programmed high and the master state machine is no longer active. When the RSEN bit is set, the SCL pin is asserted low. When the SCL pin is sampled low, the Baud Rate Generator is loaded and begins counting. The SDA pin is released (brought high) for one Baud Rate Generator count (TBRG). When the Baud Rate Generator times out, if SDA is sampled high, the SCL pin will be deasserted (brought high). When SCL is sampled high, the Baud Rate Generator is reloaded and begins counting. SDA and SCL must be sampled high for one TBRG. This action is then followed by assertion of the SDA pin (SDA = 0) for one TBRG while SCL is high. SCL is asserted low. Following this, the RSEN bit of the SSPxCON2 register will be automatically cleared and the Baud Rate Generator will not be reloaded, leaving the SDA pin held low. As soon as a Start condition is detected on the SDA and SCL pins, the S bit of the SSPxSTAT register will be set. The SSPxIF bit will not be set until the Baud Rate Generator has timed out.

Note 1: If RSEN is programmed while any other event is in progress, it will not take effect.

2: A bus collision during the Repeated Start condition occurs if:

- SDA is sampled low when SCL goes from low-to-high.
- SCL goes low before SDA is asserted low. This may indicate that another master is attempting to transmit a data '1'.

FIGURE 33-27: REPEATED START CONDITION WAVEFORM

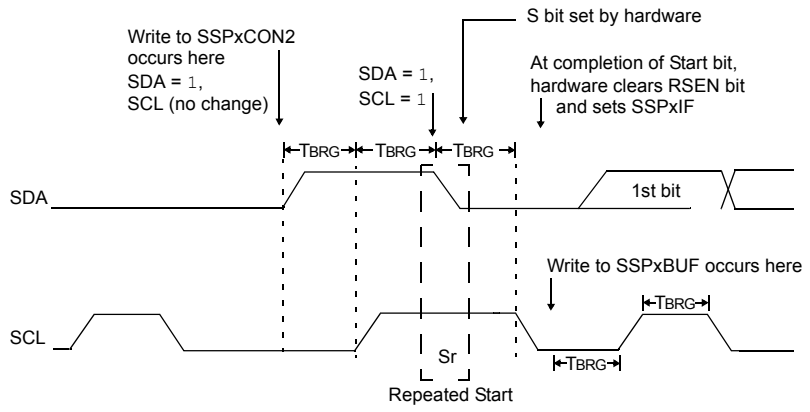

33.6.6 I²C MASTER MODE TRANSMISSION

Transmission of a data byte, a 7-bit address or the other half of a 10-bit address is accomplished by simply writing a value to the SSPxBUF register. This action will set the Buffer Full flag bit, BF, and allow the Baud Rate Generator to begin counting and start the next transmission. Each bit of address/data will be shifted out onto the SDA pin after the falling edge of SCL is asserted. SCL is held low for one Baud Rate Generator rollover count (TBRG). Data should be valid before SCL is released high. When the SCL pin is released high, it is held that way for TBRG. The data on the SDA pin must remain stable for that duration and some hold time after the next falling edge of SCL. After the eighth bit is shifted out (the falling edge of the eighth clock), the BF flag is cleared and the master releases SDA. This allows the slave device being addressed to respond with an $\overline{ACK}$ bit during the ninth bit time if an address match occurred, or if data was received properly. The status of $\overline{ACK}$ is written into the ACKSTAT bit on the rising edge of the ninth clock. If the master receives an Acknowledge, the Acknowledge Status bit, ACKSTAT, is cleared. If not, the bit is set. After the ninth clock, the SSPxIF bit is set and the master clock (Baud Rate Generator) is suspended until the next data byte is loaded into the SSPxBUF, leaving SCL low and SDA unchanged (Figure 33-28).

After the write to the SSPxBUF, each bit of the address will be shifted out on the falling edge of SCL until all seven address bits and the R/$\overline{W}$ bit are completed. On the falling edge of the eighth clock, the master will release the SDA pin, allowing the slave to respond with an Acknowledge. On the falling edge of the ninth clock, the master will sample the SDA pin to see if the address was recognized by a slave. The status of the $\overline{ACK}$ bit is loaded into the ACKSTAT Status bit of the SSPxCON2 register. Following the falling edge of the ninth clock transmission of the address, the SSPxIF is set, the BF flag is cleared and the Baud Rate Generator is turned off until another write to the SSPxBUF takes place, holding SCL low and allowing SDA to float.

33.6.6.1 BF Status Flag

In Transmit mode, the BF bit of the SSPxSTAT register is set when the CPU writes to SSPxBUF and is cleared when all eight bits are shifted out.

33.6.6.2 WCOL Status Flag

If the user writes the SSPxBUF when a transmit is already in progress (i.e., SSPxSR is still shifting out a data byte), the WCOL bit is set and the contents of the buffer are unchanged (the write does not occur).

WCOL must be cleared by software before the next transmission.

33.6.6.3 ACKSTAT Status Flag

In Transmit mode, the ACKSTAT bit of the SSPxCON2 register is cleared when the slave has sent an Acknowledge ($\overline{ACK}$ = 0) and is set when the slave does not Acknowledge ($\overline{ACK}$ = 1). A slave sends an Acknowledge when it has recognized its address (including a general call), or when the slave has properly received its data.

33.6.6.4 Typical transmit sequence:

1. The user generates a Start condition by setting the SEN bit of the SSPxCON2 register.
2. SSPxIF is set by hardware on completion of the Start.
3. SSPxIF is cleared by software.
4. The MSSP module will wait the required start time before any other operation takes place.
5. The user loads the SSPxBUF with the slave address to transmit.
6. Address is shifted out the SDA pin until all eight bits are transmitted. Transmission begins as soon as SSPxBUF is written to.
7. The MSSP module shifts in the $\overline{ACK}$ bit from the slave device and writes its value into the ACKSTAT bit of the SSPxCON2 register.
8. The MSSP module generates an interrupt at the end of the ninth clock cycle by setting the SSPxIF bit.
9. The user loads the SSPxBUF with eight bits of data.
10. Data is shifted out the SDA pin until all eight bits are transmitted.
11. The MSSP module shifts in the $\overline{ACK}$ bit from the slave device and writes its value into the ACKSTAT bit of the SSPxCON2 register.
12. Steps 8-11 are repeated for all transmitted data bytes.
13. The user generates a Stop or Restart condition by setting the PEN or RSEN bits of the SSPxCON2 register. Interrupt is generated once the Stop/Restart condition is complete.

FIGURE 33-28: I²C MASTER MODE WAVEFORM (TRANSMISSION, 7 OR 10-BIT ADDRESS)

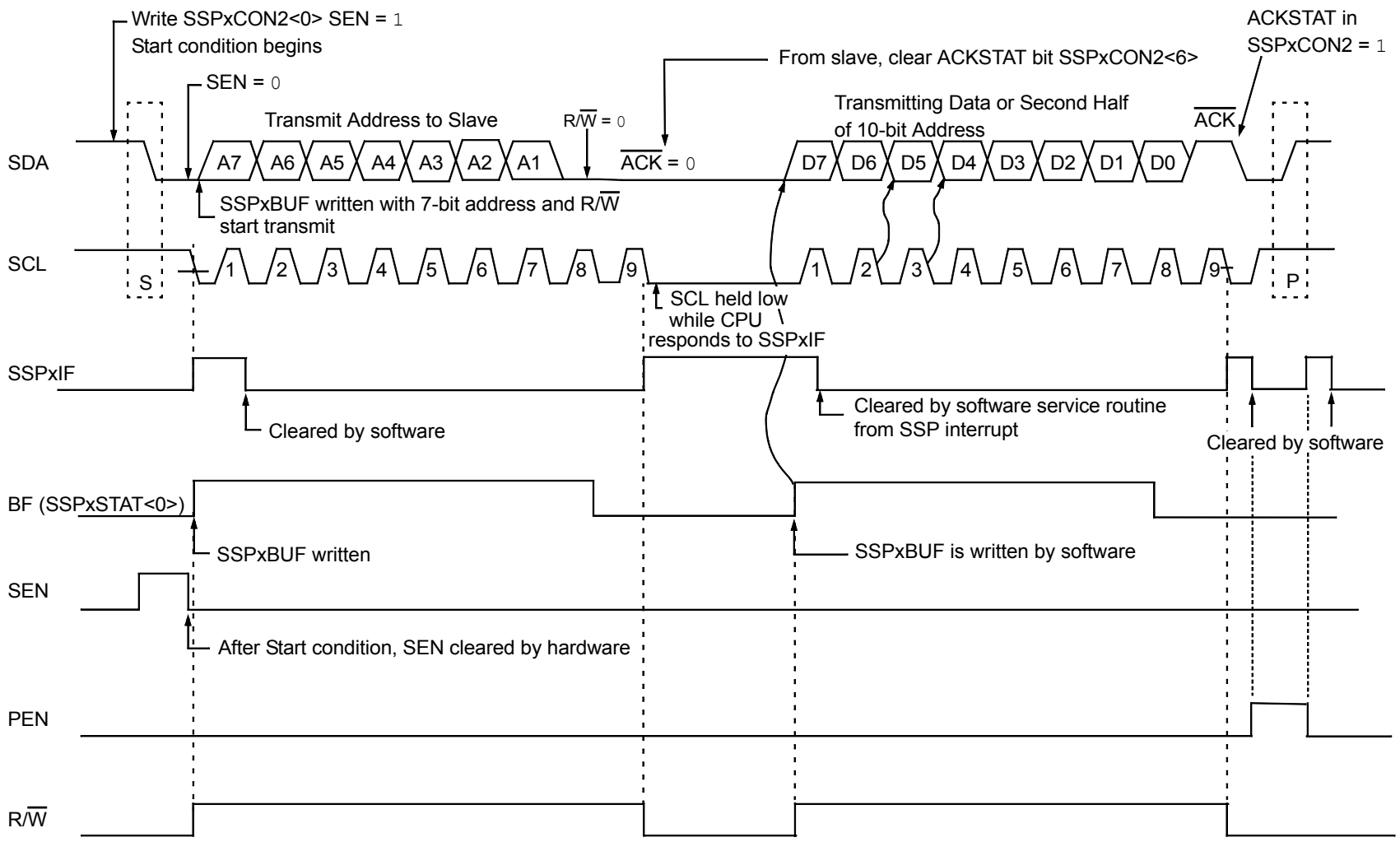

© 2017-2019 Microchip Technology Inc.

33.6.7 I²C MASTER MODE RECEPTION

Master mode reception (Figure 33-29) is enabled by programming the Receive Enable bit, RCEN bit of the SSPxCON2 register.

Note: The MSSP module must be in an Idle state before the RCEN bit is set or the RCEN bit will be disregarded.

The Baud Rate Generator begins counting and on each rollover, the state of the SCL pin changes (high-to-low/low-to-high) and data is shifted into the SSPxSR. After the falling edge of the eighth clock, the receive enable flag is automatically cleared, the contents of the SSPxSR are loaded into the SSPxBUF, the BF flag bit is set, the SSPxIF flag bit is set and the Baud Rate Generator is suspended from counting, holding SCL low. The MSSP is now in Idle state awaiting the next command. When the buffer is read by the CPU, the BF flag bit is automatically cleared. The user can then send an Acknowledge bit at the end of reception by setting the Acknowledge Sequence Enable, ACKEN bit of the SSPxCON2 register.

33.6.7.1 BF Status Flag

In receive operation, the BF bit is set when an address or data byte is loaded into SSPxBUF from SSPxSR. It is cleared when the SSPxBUF register is read.

33.6.7.2 SSPOV Status Flag

In receive operation, the SSPOV bit is set when eight bits are received into the SSPxSR and the BF flag bit is already set from a previous reception.

33.6.7.3 WCOL Status Flag

If the user writes the SSPxBUF when a receive is already in progress (i.e., SSPxSR is still shifting in a data byte), the WCOL bit is set and the contents of the buffer are unchanged (the write does not occur).

33.6.7.4 Typical Receive Sequence:

1. The user generates a Start condition by setting the SEN bit of the SSPxCON2 register.
2. SSPxIF is set by hardware on completion of the Start.
3. SSPxIF is cleared by software.
4. User writes SSPxBUF with the slave address to transmit and the R/$\overline{W}$ bit set.
5. Address is shifted out the SDA pin until all eight bits are transmitted. Transmission begins as soon as SSPxBUF is written to.
6. The MSSP module shifts in the $\overline{ACK}$ bit from the slave device and writes its value into the ACKSTAT bit of the SSPxCON2 register.
7. The MSSP module generates an interrupt at the end of the ninth clock cycle by setting the SSPxIF bit.
8. User sets the RCEN bit of the SSPxCON2 register and the master clocks in a byte from the slave.
9. After the eighth falling edge of SCL, SSPxIF and BF are set.
10. Master clears SSPxIF and reads the received byte from SSPxBUF, clears BF.
11. Master sets $\overline{ACK}$ value sent to slave in ACKDT bit of the SSPxCON2 register and initiates the $\overline{ACK}$ by setting the ACKEN bit.
12. Master's $\overline{ACK}$ is clocked out to the slave and SSPxIF is set.
13. User clears SSPxIF.
14. Steps 8-13 are repeated for each received byte from the slave.
15. Master sends a not $\overline{ACK}$ or Stop to end communication.

FIGURE 33-29: I²C MASTER MODE WAVEFORM (RECEPTION, 7-BIT ADDRESS)

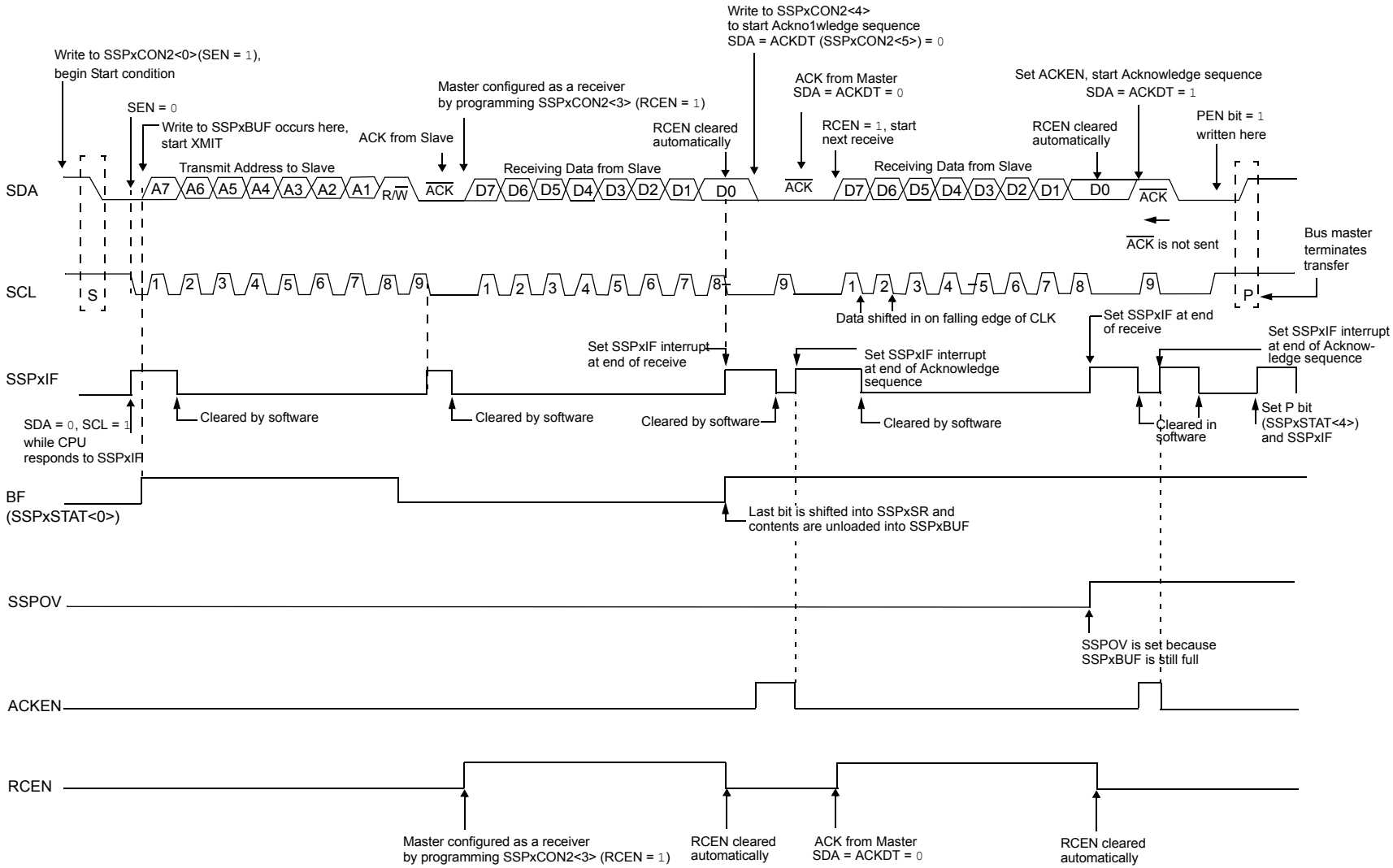

© 2017-2019 Microchip Technology Inc.

33.6.8 ACKNOWLEDGE SEQUENCE TIMING

An Acknowledge sequence is enabled by setting the Acknowledge Sequence Enable bit, ACKEN bit of the SSPxCON2 register. When this bit is set, the SCL pin is pulled low and the contents of the Acknowledge data bit are presented on the SDA pin. If the user wishes to generate an Acknowledge, then the ACKDT bit should be cleared. If not, the user should set the ACKDT bit before starting an Acknowledge sequence. The Baud Rate Generator then counts for one rollover period (TBRG) and the SCL pin is deasserted (pulled high). When the SCL pin is sampled high (clock arbitration), the Baud Rate Generator counts for TBRG. The SCL pin is then pulled low. Following this, the ACKEN bit is automatically cleared, the Baud Rate Generator is turned off and the MSSP module then goes into Idle mode (Figure 33-30).

33.6.8.1 WCOL Status Flag

If the user writes the SSPxBUF when an Acknowledge sequence is in progress, then WCOL bit is set and the contents of the buffer are unchanged (the write does not occur).

33.6.9 STOP CONDITION TIMING

A Stop bit is asserted on the SDA pin at the end of a receive/transmit by setting the Stop Sequence Enable bit, PEN bit of the SSPxCON2 register. At the end of a receive/transmit, the SCL line is held low after the falling edge of the ninth clock. When the PEN bit is set, the master will assert the SDA line low. When the SDA line is sampled low, the Baud Rate Generator is reloaded and counts down to '0'. When the Baud Rate Generator times out, the SCL pin will be brought high and one TBRG (Baud Rate Generator rollover count) later, the SDA pin will be deasserted. When the SDA pin is sampled high while SCL is high, the P bit of the SSPxSTAT register is set. A TBRG later, the PEN bit is cleared and the SSPxIF bit is set (Figure 33-31).

33.6.9.1 WCOL Status Flag

If the user writes the SSPxBUF when a Stop sequence is in progress, then the WCOL bit is set and the contents of the buffer are unchanged (the write does not occur).

FIGURE 33-30: ACKNOWLEDGE SEQUENCE WAVEFORM

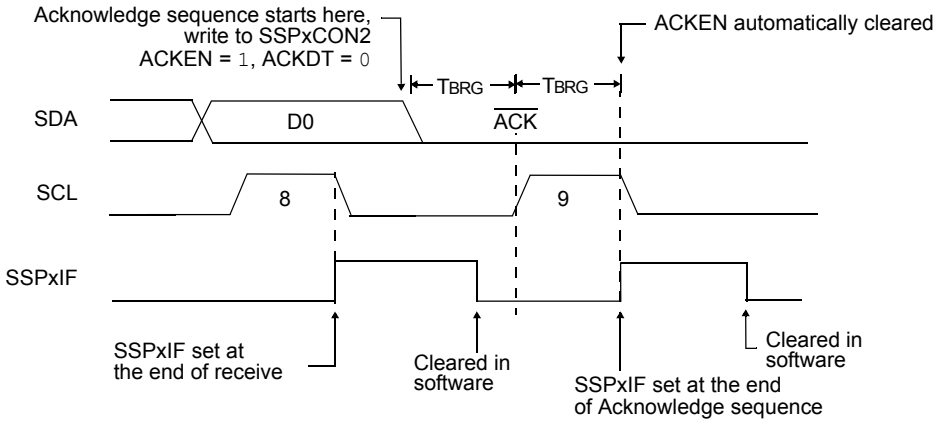

Note: TBRG = one Baud Rate Generator period.

FIGURE 33-31: STOP CONDITION RECEIVE OR TRANSMIT MODE

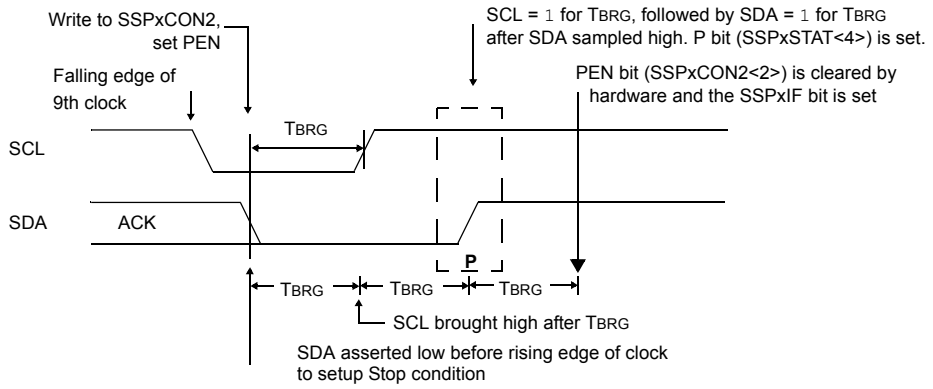

Note: TBRG = one Baud Rate Generator period.

33.6.10 SLEEP OPERATION

While in Sleep mode, the I^{2}C slave module can receive addresses or data and when an address match or complete byte transfer occurs, wake the processor from Sleep (if the MSSP interrupt is enabled).

33.6.11 EFFECTS OF A RESET

A Reset disables the MSSP module and terminates the current transfer.

33.6.12 MULTI-MASTER MODE

In Multi-Master mode, the interrupt generation on the detection of the Start and Stop conditions allows the determination of when the bus is free. The Stop (P) and Start (S) bits are cleared from a Reset or when the MSSP module is disabled. Control of the I^{2}C bus may be taken when the P bit of the SSPxSTAT register is set, or the bus is Idle, with both the S and P bits clear. When the bus is busy, enabling the SSP interrupt will generate the interrupt when the Stop condition occurs.

In multi-master operation, the SDA line must be monitored for arbitration to see if the signal level is the expected output level. This check is performed by hardware with the result placed in the BCL1IF bit.

The states where arbitration can be lost are:

- Address Transfer
- Data Transfer
- A Start Condition
- A Repeated Start Condition
- An Acknowledge Condition

33.6.13 MULTI -MASTER COMMUNICATION, BUS COLLISION AND BUS ARBITRATION

Multi-Master mode support is achieved by bus arbitration. When the master outputs address/data bits onto the SDA pin, arbitration takes place when the master outputs a '1' on SDA, by letting SDA float high and another master asserts a '0'. When the SCL pin floats high, data should be stable. If the expected data on SDA is a '1' and the data sampled on the SDA pin is '0', then a bus collision has taken place. The master will set the Bus Collision Interrupt Flag, BCL1IF and reset the I^{2}C port to its Idle state (Figure 33-32).

If a transmit was in progress when the bus collision occurred, the transmission is halted, the BF flag is cleared, the SDA and SCL lines are deasserted and the SSPxBUF can be written to. When the user services the bus collision Interrupt Service Routine and if the I^{2}C bus is free, the user can resume communication by asserting a Start condition.

If a Start, Repeated Start, Stop or Acknowledge condition was in progress when the bus collision occurred, the condition is aborted, the SDA and SCL lines are deasserted and the respective control bits in the SSPxCON2 register are cleared. When the user services the bus collision Interrupt Service Routine and if the I^{2}C bus is free, the user can resume communication by asserting a Start condition.

The master will continue to monitor the SDA and SCL pins. If a Stop condition occurs, the SSPxIF bit will be set.

A write to the SSPxBUF will start the transmission of data at the first data bit, regardless of where the transmitter left off when the bus collision occurred.

In Multi-Master mode, the interrupt generation on the detection of Start and Stop conditions allows the determination of when the bus is free. Control of the I^{2}C bus can be taken when the P bit is set in the SSPxSTAT register, or the bus is Idle and the S and P bits are cleared.

FIGURE 33-32: BUS COLLISION TIMING FOR TRANSMIT AND ACKNOWLEDGE

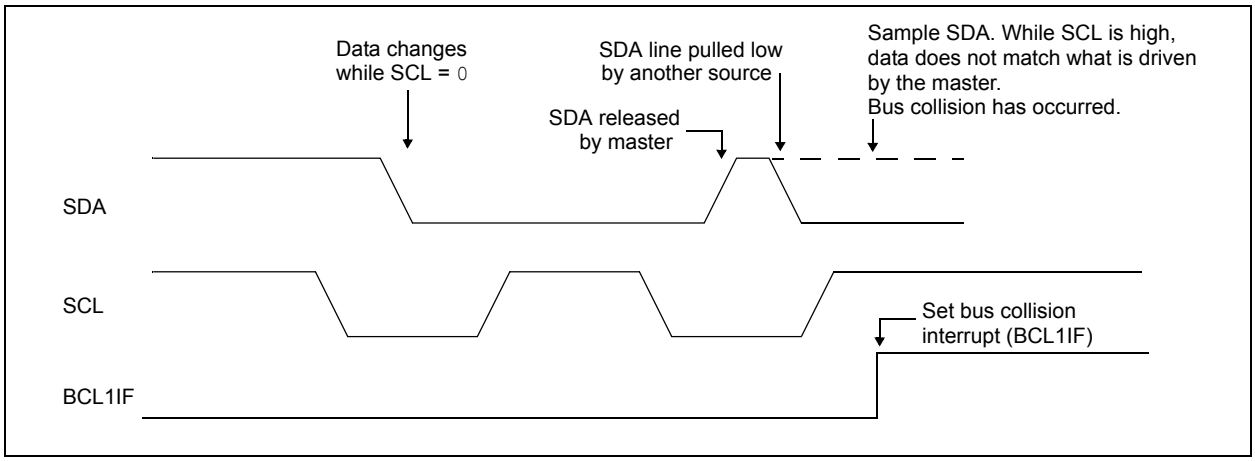

33.6.13.1 Bus Collision During a Start Condition

During a Start condition, a bus collision occurs if:

a) SDA or SCL are sampled low at the beginning of the Start condition (Figure 33-33).

b) SCL is sampled low before SDA is asserted low (Figure 33-34).

During a Start condition, both the SDA and the SCL pins are monitored.

If the SDA pin is already low, or the SCL pin is already low, then all of the following occur:

- the Start condition is aborted,
- the BCL1IF flag is set and
- the MSSP module is reset to its Idle state (Figure 33-33).

The Start condition begins with the SDA and SCL pins deasserted. When the SDA pin is sampled high, the Baud Rate Generator is loaded and counts down. If the SCL pin is sampled low while SDA is high, a bus collision occurs because it is assumed that another master is attempting to drive a data '1' during the Start condition.

If the SDA pin is sampled low during this count, the BRG is reset and the SDA line is asserted early (Figure 33-35). If, however, a '1' is sampled on the SDA pin, the SDA pin is asserted low at the end of the BRG count. The Baud Rate Generator is then reloaded and counts down to zero; if the SCL pin is sampled as '0' during this time, a bus collision does not occur. At the end of the BRG count, the SCL pin is asserted low.

> **Note:** The reason that bus collision is not a factor during a Start condition is that no two bus masters can assert a Start condition at the exact same time. Therefore, one master will always assert SDA before the other. This condition does not cause a bus collision because the two masters must be allowed to arbitrate the first address following the Start condition. If the address is the same, arbitration must be allowed to continue into the data portion, Repeated Start or Stop conditions.

FIGURE 33-33: BUS COLLISION DURING START CONDITION (SDA ONLY)

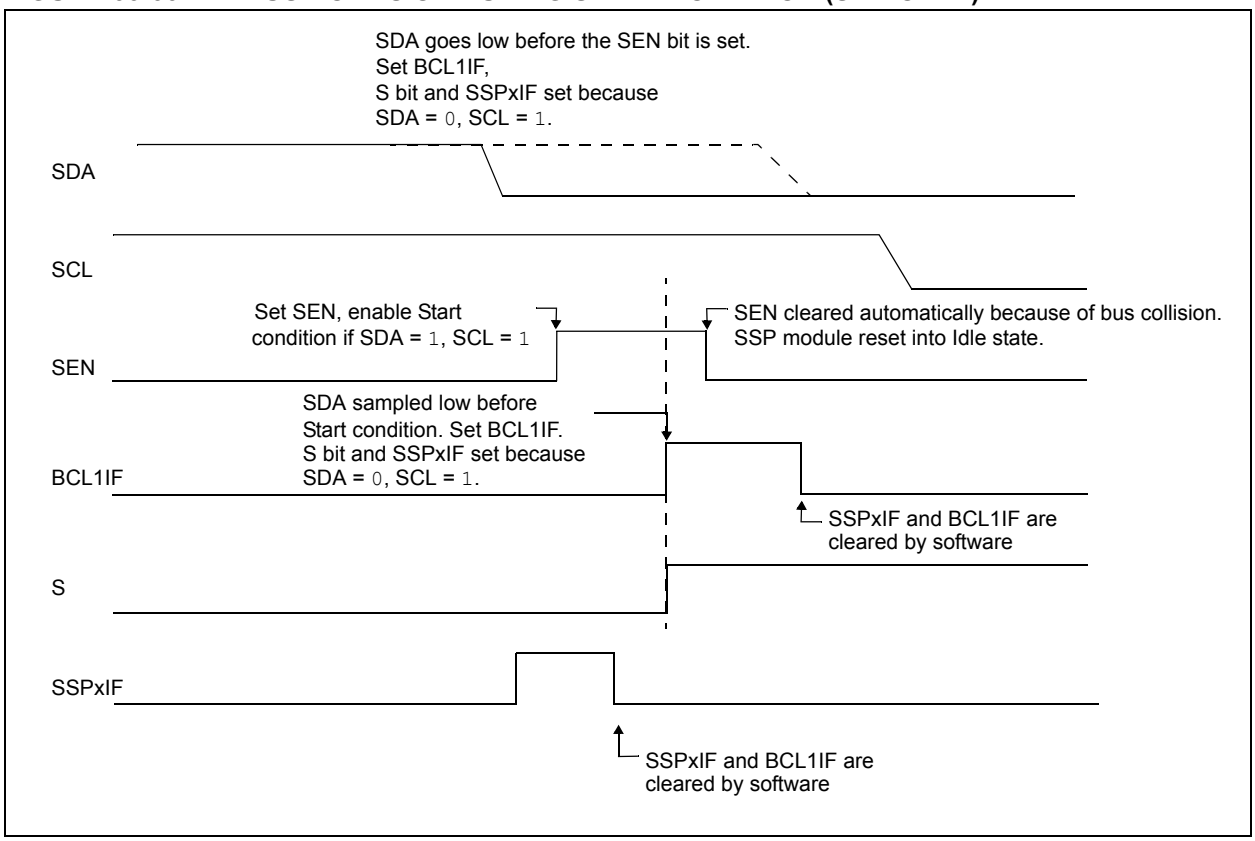

FIGURE 33-34: BUS COLLISION DURING START CONDITION (SCL = 0)

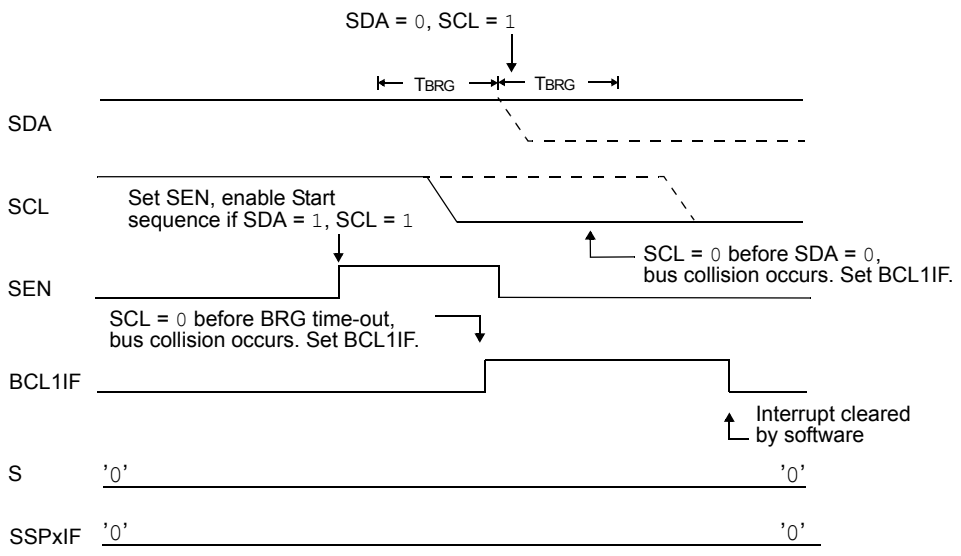

FIGURE 33-35: BRG RESET DUE TO SDA ARBITRATION DURING START CONDITION

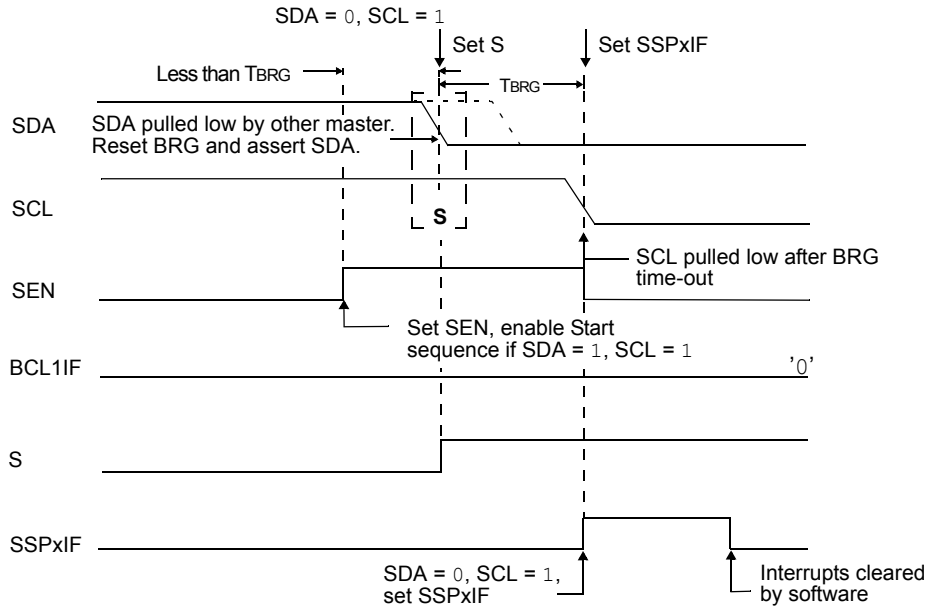

33.6.13.2 Bus Collision During a Repeated Start Condition

During a Repeated Start condition, a bus collision occurs if:

a) A low level is sampled on SDA when SCL goes from low level to high level (Case 1).

b) SCL goes low before SDA is asserted low, indicating that another master is attempting to transmit a data '1' (Case 2).

When the user releases SDA and the pin is allowed to float high, the BRG is loaded with SSPxADD and counts down to zero. The SCL pin is then deasserted and when sampled high, the SDA pin is sampled.

If SDA is low, a bus collision has occurred (i.e., another master is attempting to transmit a data '0', Figure 33-36). If SDA is sampled high, the BRG is reloaded and begins counting. If SDA goes from high-to-low before the BRG times out, no bus collision occurs because no two masters can assert SDA at exactly the same time.

If SCL goes from high-to-low before the BRG times out and SDA has not already been asserted, a bus collision occurs. In this case, another master is attempting to transmit a data '1' during the Repeated Start condition, see Figure 33-37.

If, at the end of the BRG time-out, both SCL and SDA are still high, the SDA pin is driven low and the BRG is reloaded and begins counting. At the end of the count, regardless of the status of the SCL pin, the SCL pin is driven low and the Repeated Start condition is complete.

FIGURE 33-36: BUS COLLISION DURING A REPEATED START CONDITION (CASE 1)

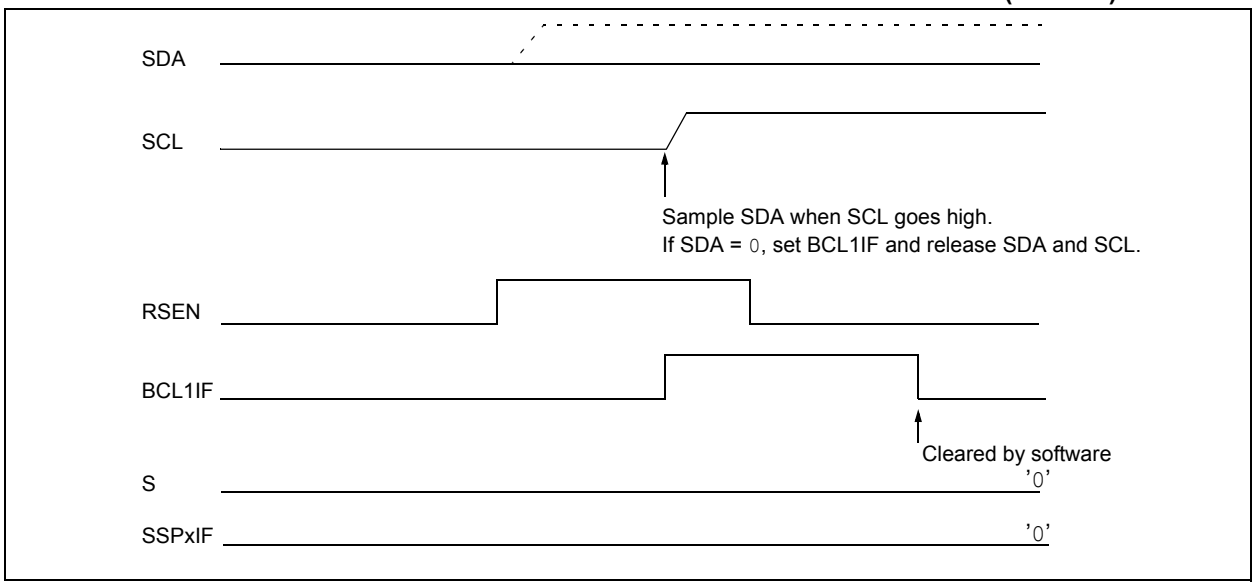

FIGURE 33-37: BUS COLLISION DURING REPEATED START CONDITION (CASE 2)

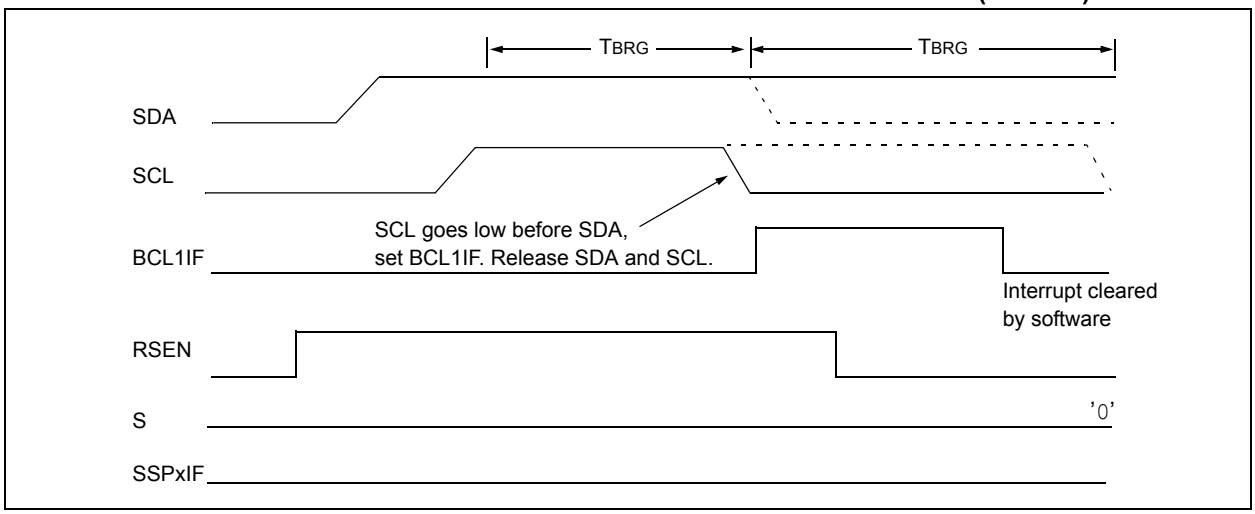

33.6.13.3 Bus Collision During a Stop Condition

Bus collision occurs during a Stop condition if:

a) After the SDA pin has been deasserted and allowed to float high, SDA is sampled low after the BRG has timed out (Case 1).

b) After the SCL pin is deasserted, SCL is sampled low before SDA goes high (Case 2).

The Stop condition begins with SDA asserted low. When SDA is sampled low, the SCL pin is allowed to float. When the pin is sampled high (clock arbitration), the Baud Rate Generator is loaded with SSPxADD and counts down to zero. After the BRG times out, SDA is sampled. If SDA is sampled low, a bus collision has occurred. This is due to another master attempting to drive a data '0' (Figure 33-38). If the SCL pin is sampled low before SDA is allowed to float high, a bus collision occurs. This is another case of another master attempting to drive a data '0' (Figure 33-39).

FIGURE 33-38: BUS COLLISION DURING A STOP CONDITION (CASE 1)

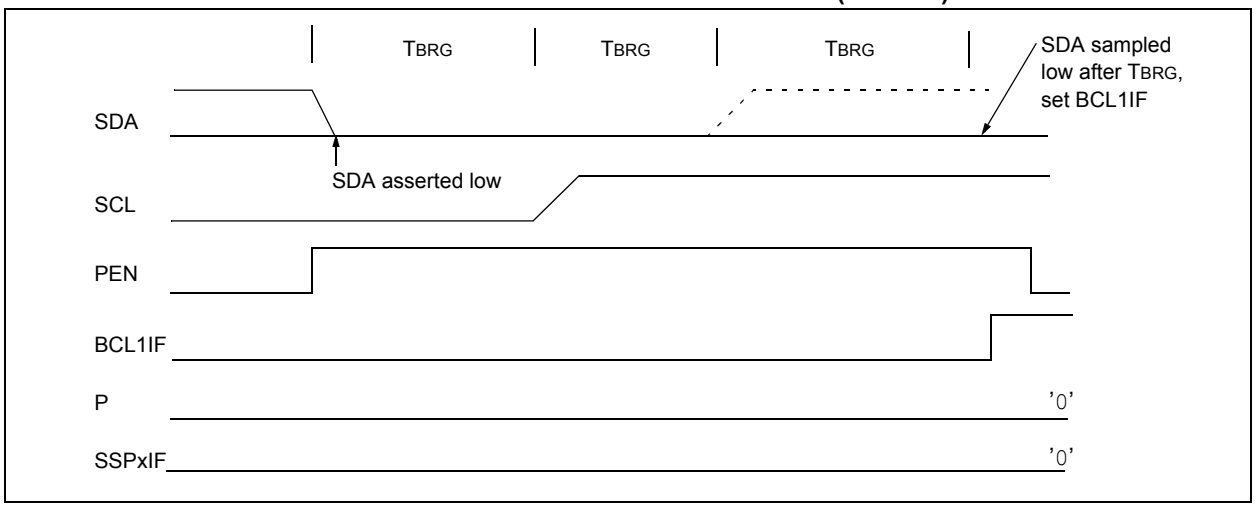

FIGURE 33-39: BUS COLLISION DURING A STOP CONDITION (CASE 2)

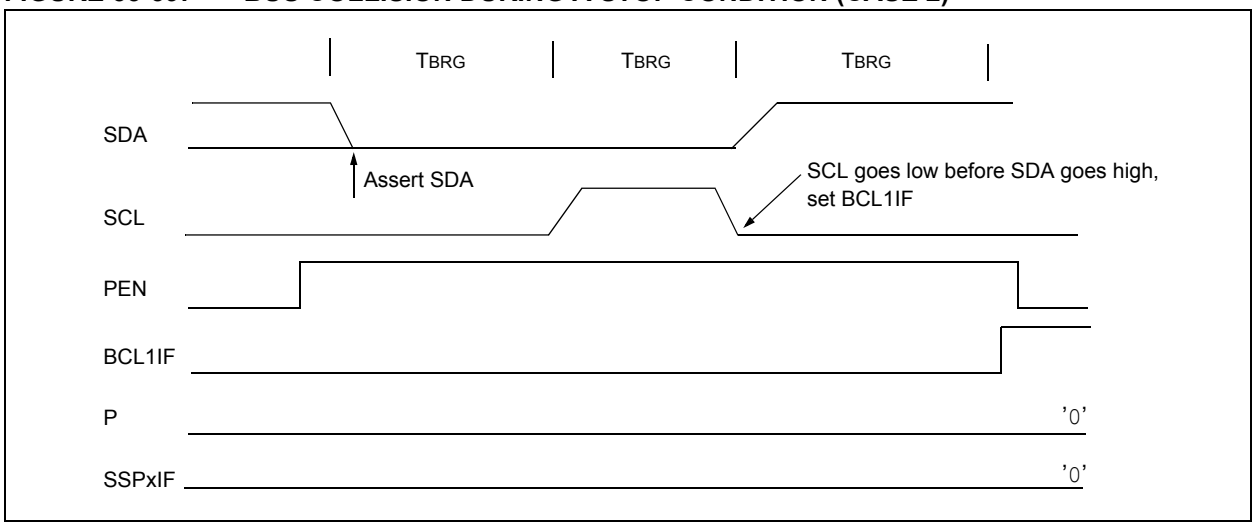

33.7 BAUD RATE GENERATOR

The MSSP module has a Baud Rate Generator available for clock generation in both I^{2}C and SPI Master modes. The Baud Rate Generator (BRG) reload value is placed in the SSPxADD register (Register 33-6). When a write occurs to SSPxBUF, the Baud Rate Generator will automatically begin counting down.

Once the given operation is complete, the internal clock will automatically stop counting and the clock pin will remain in its last state.

An internal signal "Reload" in Figure 33-40 triggers the value from SSPxADD to be loaded into the BRG counter. This occurs twice for each oscillation of the module clock line. The logic dictating when the reload signal is asserted depends on the mode the MSSP is being operated in.

Table 33-4 demonstrates clock rates based on instruction cycles and the BRG value loaded into SSPxADD.

EQUATION 33-1:

$$F_{CLOCK} = \frac{F_{OSC}}{(SSP1ADD + 1)(4)}$$

FIGURE 33-40: BAUD RATE GENERATOR BLOCK DIAGRAM

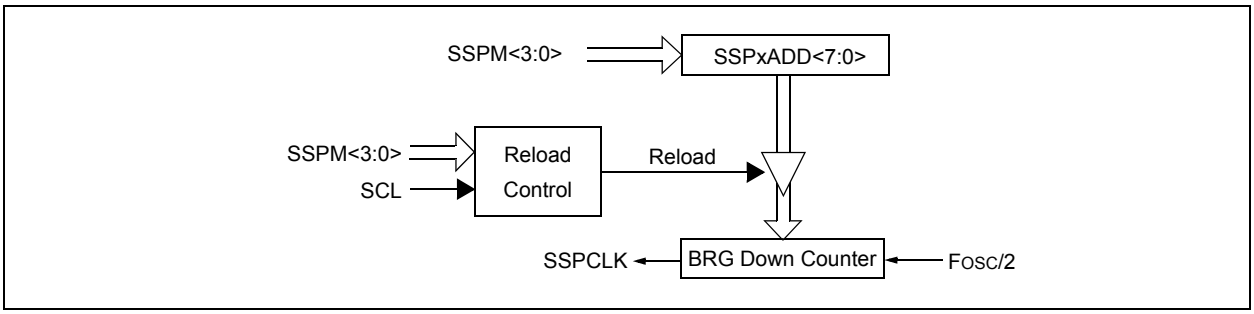

Note: Values of `0x00`, `0x01` and `0x02` are not valid for SSPxADD when used as a Baud Rate Generator for I^{2}C. This is an implementation limitation.

TABLE 33-2: MSSP CLOCK RATE W/BRG

FOSC	FCY	BRG Value	FCLOCK (2 Rollovers of BRG)
32 MHz	8 MHz	13h	400 kHz
32 MHz	8 MHz	19h	308 kHz
32 MHz	8 MHz	4Fh	100 kHz
16 MHz	4 MHz	09h	400 kHz
16 MHz	4 MHz	0Ch	308 kHz
16 MHz	4 MHz	27h	100 kHz
4 MHz	1 MHz	09h	100 kHz

Note: Refer to the I/O port electrical specifications in Table 39-4 to ensure the system is designed to support I/O requirements.

33.8 Register Definitions: MSSPx Control

REGISTER 33-1: SSPxSTAT: SSPx STATUS REGISTER

R/W-0/0	R/W-0/0	R/HS/HC-0	R/HS/HC-0	R/HS/HC-0	R/HS/HC-0	R/HS/HC-0	R/HS/HC-0
SMP	CKE(1)	D/$\overline{A}$	P(2)	S(2)	R/$\overline{W}$	UA	BF
bit 7							bit 0

Legend:		
R = Readable bit	W = Writable bit	U = Unimplemented bit, read as ‘0’
u = Bit is unchanged	x = Bit is unknown	-n/n = Value at POR and BOR/Value at all other Resets
‘1’ = Bit is set	‘0’ = Bit is cleared	HS/HC = Hardware set/clear

bit 7 **SMP:** SPI Data Input Sample bit
SPI Master mode:
1 = Input data sampled at end of data output time
0 = Input data sampled at middle of data output time
SPI Slave mode:
SMP must be cleared when SPI is used in Slave mode
In I^2C Master or Slave mode:
1 = Slew rate control disabled for Standard Speed mode (100 kHz and 1 MHz)
0 = Slew rate control enabled for High-Speed mode (400 kHz)

bit 6 **CKE:** SPI Clock Edge Select bit (SPI mode only)(1)
In SPI Master or Slave mode:
1 = Transmit occurs on transition from active to Idle clock state
0 = Transmit occurs on transition from Idle to active clock state
In I^2C mode only:
1 = Enable input logic so that thresholds are compliant with SMBus specification
0 = Disable SMBus specific inputs

bit 5 **D/$\overline{A}$:** Data/$\overline{Address}$ bit (I^2C mode only)
1 = Indicates that the last byte received or transmitted was data
0 = Indicates that the last byte received or transmitted was address

bit 4 **P:** Stop bit(2)
(I^2C mode only. This bit is cleared when the MSSP module is disabled, SSPEN is cleared.)
1 = Indicates that a Stop bit has been detected last (this bit is ‘0’ on Reset)
0 = Stop bit was not detected last

bit 3 **S:** Start bit (2)
(I^2C mode only. This bit is cleared when the MSSP module is disabled, SSPEN is cleared.)
1 = Indicates that a Start bit has been detected last (this bit is ‘0’ on Reset)
0 = Start bit was not detected last

bit 2 **R/$\overline{W}$:** Read/$\overline{Write}$ bit information (I^2C mode only)
This bit holds the R/$\overline{W}$ bit information following the last address match. This bit is only valid from the address match to the next Start bit, Stop bit, or not $\overline{ACK}$ bit.
In I^2C Slave mode:
1 = Read
0 = Write
In I^2C Master mode:
1 = Transmit is in progress
0 = Transmit is not in progress
OR-ing this bit with SEN, RSEN, PEN, RCEN or ACKEN will indicate if the MSSP is in Idle mode.

bit 1 **UA:** Update Address bit (10-bit I^2C mode only)
1 = Indicates that the user needs to update the address in the SSPxADD register
0 = Address does not need to be updated

bit 0 **BF:** Buffer Full Status bit
Receive (SPI and I^2C modes):
1 = Receive complete, SSPxBUF is full
0 = Receive not complete, SSPxBUF is empty
Transmit (I^2C mode only):
1 = Data transmit in progress (does not include the $\overline{ACK}$ and Stop bits), SSPxBUF is full
0 = Data transmit complete (does not include the $\overline{ACK}$ and Stop bits), SSPxBUF is empty

Note 1: Polarity of clock state is set by the CKP bit of the SSPxCON register.
2: This bit is cleared on Reset and when SSPEN is cleared.

REGISTER 33-2: SSPxCON1: SSPx CONTROL REGISTER 1

R/C/HS-0/0	R/C/HS-0/0	R/W-0/0	R/W-0/0	R/W-0/0	R/W-0/0	R/W-0/0	R/W-0/0
WCOL	SSPOV(1)	SSPEN	CKP	SSPM<3:0>			
bit 7							bit 0

Legend:			
R = Readable bit	W = Writable bit	U = Unimplemented bit, read as ‘0’	
u = Bit is unchanged	x = Bit is unknown	-n/n = Value at POR and BOR/Value at all other Resets	
‘1’ = Bit is set	‘0’ = Bit is cleared	HS = Bit is set by hardware	C = User cleared

bit 7 **WCOL:** Write Collision Detect bit (Transmit mode only)
1 = The SSPxBUF register is written while it is still transmitting the previous word (must be cleared in software)
0 = No collision

bit 6 **SSPOV:** Receive Overflow Indicator bit(1)
In SPI mode:
1 = A new byte is received while the SSPxBUF register is still holding the previous data. In case of overflow, the data in SSPxSR is lost. Overflow can only occur in Slave mode. In Slave mode, the user must read the SSPxBUF, even if only transmitting data, to avoid setting overflow. In Master mode, the overflow bit is not set since each new reception (and transmission) is initiated by writing to the SSPxBUF register (must be cleared in software).
0 = No overflow
In I^2C mode:
1 = A byte is received while the SSPxBUF register is still holding the previous byte. SSPOV is a “don’t care” in Transmit mode (must be cleared in software).
0 = No overflow

bit 5 **SSPEN:** Synchronous Serial Port Enable bit
In both modes, when enabled, the following pins must be properly configured as input or output
In SPI mode:
1 = Enables serial port and configures SCK, SDO, SDI and $\overline{SS}$ as the source of the serial port pins(2)
0 = Disables serial port and configures these pins as I/O port pins
In I^2C mode:
1 = Enables the serial port and configures the SDA and SCL pins as the source of the serial port pins(3)
0 = Disables serial port and configures these pins as I/O port pins

bit 4 **CKP:** Clock Polarity Select bit
In SPI mode:
1 = Idle state for clock is a high level
0 = Idle state for clock is a low level
In I^2C Slave mode:
SCL release control
1 = Enable clock
0 = Holds clock low (clock stretch). (Used to ensure data setup time.)
In I^2C Master mode:
Unused in this mode

bit 3-0 **SSPM<3:0>:** Synchronous Serial Port Mode Select bits
1111 = I^2C Slave mode, 10-bit address with Start and Stop bit interrupts enabled
1110 = I^2C Slave mode, 7-bit address with Start and Stop bit interrupts enabled
1101 = Reserved
1100 = Reserved
1011 = I^2C firmware controlled Master mode (slave idle)
1010 = SPI Master mode, clock = FOSC/(4 * (SSPxADD+1))(5)
1001 = Reserved
1000 = I^2C Master mode, clock = FOSC / (4 * (SSPxADD+1))(4)
0111 = I^2C Slave mode, 10-bit address
0110 = I^2C Slave mode, 7-bit address
0101 = SPI Slave mode, clock = SCK pin, $\overline{SS}$ pin control disabled, $\overline{SS}$ can be used as I/O pin
0100 = SPI Slave mode, clock = SCK pin, $\overline{SS}$ pin control enabled
0011 = SPI Master mode, clock = T2_match/2
0010 = SPI Master mode, clock = FOSC/64
0001 = SPI Master mode, clock = FOSC/16
0000 = SPI Master mode, clock = FOSC/4

Note 1: In Master mode, the overflow bit is not set since each new reception (and transmission) is initiated by writing to the SSPxBUF register.
2: When enabled, these pins must be properly configured as input or output. Use SSPxSSPPS, SSPxCLKPPS, SSPxDATPPS, and RxyPPS to select the pins.
3: When enabled, the SDA and SCL pins must be configured as inputs. Use SSPxCLKPPS, SSPxDATPPS, and RxyPPS to select the pins.
4: SSPxADD values of 0, 1 or 2 are not supported for I^2C mode.
5: SSPxADD value of ‘0’ is not supported. Use SSPM = 0000 instead.

REGISTER 33-3: SSPxCON2: SSPx CONTROL REGISTER 2 (I^2C MODE ONLY)(1)

R/W-0/0	R/HS/HC-0	R/W-0/0	R/S/HC-0/0	R/S/HC-0/0	R/S/HC-0/0	R/S/HC-0/0	R/S/HC-0/0
GCEN	ACKSTAT	ACKDT	ACKEN	RCEN	PEN	RSEN	SEN
bit 7							bit 0

Legend:		
HS = Bit is set by hardware		
R = Readable bit	W = Writable bit	U = Unimplemented bit, read as ‘0’
u = Bit is unchanged	x = Bit is unknown	-n/n = Value at POR and BOR/Value at all other Resets
‘1’ = Bit is set	‘0’ = Bit is cleared	HC = Cleared by hardware S = User set

bit 7 **GCEN:** General Call Enable bit (in I^2C Slave mode only)
1 = Enable interrupt when a general call address (0x00 or 00h) is received in the SSPxSR
0 = General call address disabled

bit 6 **ACKSTAT:** Acknowledge Status bit (in I^2C mode only)
1 = Acknowledge was not received
0 = Acknowledge was received

bit 5 **ACKDT:** Acknowledge Data bit (in I^2C mode only)
In Receive mode:
Value transmitted when the user initiates an Acknowledge sequence at the end of a receive
1 = Not Acknowledge
0 = Acknowledge

bit 4 **ACKEN:** Acknowledge Sequence Enable bit (in I^2C Master mode only)
In Master Receive mode:
1 = Initiate Acknowledge sequence on SDA and SCL pins, and transmit ACKDT data bit. Automatically cleared by hardware.
0 = Acknowledge sequence idle

bit 3 **RCEN:** Receive Enable bit (in I^2C Master mode only)
1 = Enables Receive mode for I^2C
0 = Receive idle

bit 2 **PEN:** Stop Condition Enable bit (in I^2C Master mode only)
1 = Initiate Stop condition on SDA and SCL pins. Automatically cleared by hardware.
0 = Stop condition Idle

bit 1 **RSEN:** Repeated Start Condition Enable bit (in I^2C Master mode only)
1 = Initiate Repeated Start condition on SDA and SCL pins. Automatically cleared by hardware.
0 = Repeated Start condition Idle

bit 0 **SEN:** Start Condition Enable/Stretch Enable bit
In Master mode:
1 = Initiate Start condition on SDA and SCL pins. Automatically cleared by hardware.
0 = Start condition Idle
In Slave mode:
1 = Clock stretching is enabled for both slave transmit and slave receive (stretch enabled)
0 = Clock stretching is disabled

Note 1: For bits ACKEN, RCEN, PEN, RSEN, SEN: If the I^2C module is not in the Idle state, these bits may not be set (no spooling) and the SSPxBUF may not be written (or writes to the SSPxBUF are disabled).

REGISTER 33-4: SSPxCON3: SSPx CONTROL REGISTER 3

R-0/0	R/W-0/0	R/W-0/0	R/W-0/0	R/W-0/0	R/W-0/0	R/W-0/0	R/W-0/0
ACKTIM(3)	PCIE	SCIE	BOEN	SDAHT	SBCDE	AHEN	DHEN
bit 7							bit 0

Legend:		
R = Readable bit	W = Writable bit	U = Unimplemented bit, read as ‘0’
u = Bit is unchanged	x = Bit is unknown	-n/n = Value at POR and BOR/Value at all other Resets
‘1’ = Bit is set	‘0’ = Bit is cleared	

bit 7 **ACKTIM:** Acknowledge Time Status bit (I^2C mode only)(3)
1 = Indicates the I^2C bus is in an Acknowledge sequence, set on 8th falling edge of SCL clock
0 = Not an Acknowledge sequence, cleared on 9TH rising edge of SCL clock

bit 6 **PCIE**: Stop Condition Interrupt Enable bit (I^2C mode only)
1 = Enable interrupt on detection of Stop condition
0 = Stop detection interrupts are disabled(2)

bit 5 **SCIE**: Start Condition Interrupt Enable bit (I^2C mode only)
1 = Enable interrupt on detection of Start or Restart conditions
0 = Start detection interrupts are disabled(2)

bit 4 **BOEN:** Buffer Overwrite Enable bit
In SPI Slave mode:(1)
1 = SSPxBUF updates every time that a new data byte is shifted in ignoring the BF bit
0 = If new byte is received with BF bit of the SSPxSTAT register already set, SSPOV bit of the SSPxCON1 register is set, and the buffer is not updated
In I^2C Master mode and SPI Master mode:
This bit is ignored.
In I^2C Slave mode:
1 = SSPxBUF is updated and $\overline{ACK}$ is generated for a received address/data byte, ignoring the state of the SSPOV bit only if the BF bit = 0.
0 = SSPxBUF is only updated when SSPOV is clear

bit 3 **SDAHT:** SDA Hold Time Selection bit (I^2C mode only)
1 = Minimum of 300 ns hold time on SDA after the falling edge of SCL
0 = Minimum of 100 ns hold time on SDA after the falling edge of SCL

bit 2 **SBCDE:** Slave Mode Bus Collision Detect Enable bit (I^2C Slave mode only)
If, on the rising edge of SCL, SDA is sampled low when the module is outputting a high state, the BCL1IF bit of the PIR3 register is set, and bus goes idle
1 = Enable slave bus collision interrupts
0 = Slave bus collision interrupts are disabled

bit 1 **AHEN:** Address Hold Enable bit (I^2C Slave mode only)
1 = Following the eighth falling edge of SCL for a matching received address byte; CKP bit of the SSPxCON1 register will be cleared and the SCL will be held low.
0 = Address holding is disabled

bit 0 **DHEN:** Data Hold Enable bit (I^2C Slave mode only)
1 = Following the eighth falling edge of SCL for a received data byte; slave hardware clears the CKP bit of the SSPxCON1 register and SCL is held low.
0 = Data holding is disabled

Note 1: For daisy-chained SPI operation; allows the user to ignore all but the last received byte. SSPOV is still set when a new byte is received and BF = 1, but hardware continues to write the most recent byte to SSPxBUF.
2: This bit has no effect in Slave modes that Start and Stop condition detection is explicitly listed as enabled.
3: The ACKTIM Status bit is only active when the AHEN bit or DHEN bit is set.

REGISTER 33-5: SSPxMSK: SSPx MASK REGISTER

R/W-1/1	R/W-1/1	R/W-1/1	R/W-1/1	R/W-1/1	R/W-1/1	R/W-1/1	R/W-1/1
SSPxMSK<7:0>							
bit 7							bit 0

Legend:		
R = Readable bit	W = Writable bit	U = Unimplemented bit, read as ‘0’
u = Bit is unchanged	x = Bit is unknown	-n/n = Value at POR and BOR/Value at all other Resets
‘1’ = Bit is set	‘0’ = Bit is cleared	

bit 7-1 **SSPxMSK<7:1>:** Mask bits
`1` = The received address bit n is compared to SSPxADD<n> to detect I^{2}C address match
`0` = The received address bit n is not used to detect I^{2}C address match

bit 0 **SSPxMSK<0>:** Mask bit for I^{2}C Slave mode, 10-bit Address
I^{2}C Slave mode, 10-bit address (SSPM<3:0> = `0111` or `1111`):
`1` = The received address bit 0 is compared to SSPxADD<0> to detect I^{2}C address match
`0` = The received address bit 0 is not used to detect I^{2}C address match
I^{2}C Slave mode, 7-bit address:
MSK0 bit is ignored.

REGISTER 33-6: SSPxADD: MSSPx ADDRESS AND BAUD RATE REGISTER (I^{2}C MODE)

R/W-0/0	R/W-0/0	R/W-0/0	R/W-0/0	R/W-0/0	R/W-0/0	R/W-0/0	R/W-0/0
SSPxADD<7:0>							
bit 7							bit 0

Legend:		
R = Readable bit	W = Writable bit	U = Unimplemented bit, read as ‘0’
u = Bit is unchanged	x = Bit is unknown	-n/n = Value at POR and BOR/Value at all other Resets
‘1’ = Bit is set	‘0’ = Bit is cleared	

Master mode:

bit 7-0 **SSPxADD<7:0>:** Baud Rate Clock Divider bits
SCL pin clock period = ((ADD<7:0> + 1) *4)/FOSC

10-Bit Slave mode – Most Significant Address Byte:

bit 7-3 **Not used:** Unused for Most Significant Address Byte. Bit state of this register is a “don’t care”. Bit pattern sent by master is fixed by I^{2}C specification and must be equal to ‘`11110`’. However, those bits are compared by hardware and are not affected by the value in this register.

bit 2-1 **SSPxADD<2:1>:** Two Most Significant bits of 10-bit address

bit 0 **Not used:** Unused in this mode. Bit state is a “don’t care”.

10-Bit Slave mode – Least Significant Address Byte:

bit 7-0 **SSPxADD<7:0>:** Eight Least Significant bits of 10-bit address

7-Bit Slave mode:

bit 7-1 **SSPxADD<7:1>:** 7-bit address

bit 0 **Not used:** Unused in this mode. Bit state is a “don’t care”.

REGISTER 33-7: SSPxBUF: MSSPx BUFFER REGISTER

R/W-x	R/W-x	R/W-x	R/W-x	R/W-x	R/W-x	R/W-x	R/W-x
SSPxBUF<7:0>							
bit 7							bit 0

Legend:		
R = Readable bit	W = Writable bit	U = Unimplemented bit, read as ‘0’
u = Bit is unchanged	x = Bit is unknown	-n/n = Value at POR and BOR/Value at all other Resets
‘1’ = Bit is set	‘0’ = Bit is cleared	

bit 7-0 **SSPxBUF<7:0>:** MSSP Buffer bits

TABLE 33-3: SUMMARY OF REGISTERS ASSOCIATED WITH MSSPx

Name	Bit 7	Bit 6	Bit 5	Bit 4	Bit 3	Bit 2	Bit 1	Bit 0	Register on Page
INTCON	GIE	PEIE	—	—	—	—	—	INTEDG	164
PIR1	OSFIF	CSWIF	—	—	—	—	ADTIF	ADIF	175
PIE1	OSFIE	CSWIE	—	—	—	—	ADTIE	ADIE	166
SSP1STAT	SMP	CKE	D/$\overline{A}$	P	S	R/$\overline{W}$	UA	BF	558
SSP1CON1	WCOL	SSPOV	SSPEN	CKP	SSPM<3:0>				559
SSP1CON2	GCEN	ACKSTAT	ACKDT	ACKEN	RCEN	PEN	RSEN	SEN	560
SSP1CON3	ACKTIM	PCIE	SCIE	BOEN	SDAHT	SBCDE	AHEN	DHEN	561
SSP1MSK	SSPMSK<7:0>								562
SSP1ADD	SSPADD<7:0>								562
SSP1BUF	SSPBUF<7:0>								563
SSP2STAT	SMP	CKE	D/$\overline{A}$	P	S	R/$\overline{W}$	UA	BF	558
SSP2CON1	WCOL	SSPOV	SSPEN	CKP	SSPM<3:0>				559
SSP2CON2	GCEN	ACKSTAT	ACKDT	ACKEN	RCEN	PEN	RSEN	SEN	560
SSP2CON3	ACKTIM	PCIE	SCIE	BOEN	SDAHT	SBCDE	AHEN	DHEN	561
SSP2MSK	SSPMSK<7:0>								562
SSP2ADD	SSPADD<7:0>								562
SSP2BUF	SSPBUF<7:0>								563
SSP1CLKPPS	—	—	—	SSP1CLKPPS<4:0>					264
SSP1DATPPS	—	—	—	SSP1DATPPS<4:0>					264
SSP1SSPPS	—	—	—	SSP1SSPPS<4:0>					264
SSP2CLKPPS	—	—	—	SSP2CLKPPS<4:0>					264
SSP2DATPPS	—	—	—	SSP2DATPPS<4:0>					264
SSP2SSPPS	—	—	—	SSP2SSPPS<4:0>					264
RxyPPS	—	—	—	RxyPPS<4:0>					265

Legend: — = Unimplemented location, read as ‘0’. Shaded cells are not used by the MSSPx module.

34.0 ENHANCED UNIVERSAL SYNCHRONOUS ASYNCHRONOUS RECEIVER TRANSMITTER (EUSART1/2)

The Enhanced Universal Synchronous Asynchronous Receiver Transmitter (EUSART) module is a serial I/O communications peripheral. It contains all the clock generators, shift registers and data buffers necessary to perform an input or output serial data transfer independent of device program execution. The EUSART, also known as a Serial Communications Interface (SCI), can be configured as a full-duplex asynchronous system or half-duplex synchronous system. Full-Duplex mode is useful for communications with peripheral systems, such as CRT terminals and personal computers. Half-Duplex Synchronous mode is intended for communications with peripheral devices, such as A/D or D/A integrated circuits, serial EEPROMs or other microcontrollers. These devices typically do not have internal clocks for baud rate generation and require the external clock signal provided by a master synchronous device.

Note: Two identical EUSART modules are implemented on this device. The timers are named EUSART1 and EUSART4. All references to EUSART1 apply as well to EUSART2.

The EUSART module includes the following capabilities:

- Full-duplex asynchronous transmit and receive
- Two-character input buffer
- One-character output buffer
- Programmable 8-bit or 9-bit character length
- Address detection in 9-bit mode
- Input buffer overrun error detection
- Received character framing error detection
- Half-duplex synchronous master
- Half-duplex synchronous slave
- Programmable clock polarity in synchronous modes
- Sleep operation

The EUSART module implements the following additional features, making it ideally suited for use in Local Interconnect Network (LIN) bus systems:

- Automatic detection and calibration of the baud rate
- Wake-up on Break reception
- 13-bit Break character transmit

Block diagrams of the EUSART transmitter and receiver are shown in Figure 34-1 and Figure 34-2.

The EUSART transmit output (TX_out) is available to the TX/CK pin and internally to the following peripherals:

- Configurable Logic Cell (CLC)

FIGURE 34-1: EUSART TRANSMIT BLOCK DIAGRAM

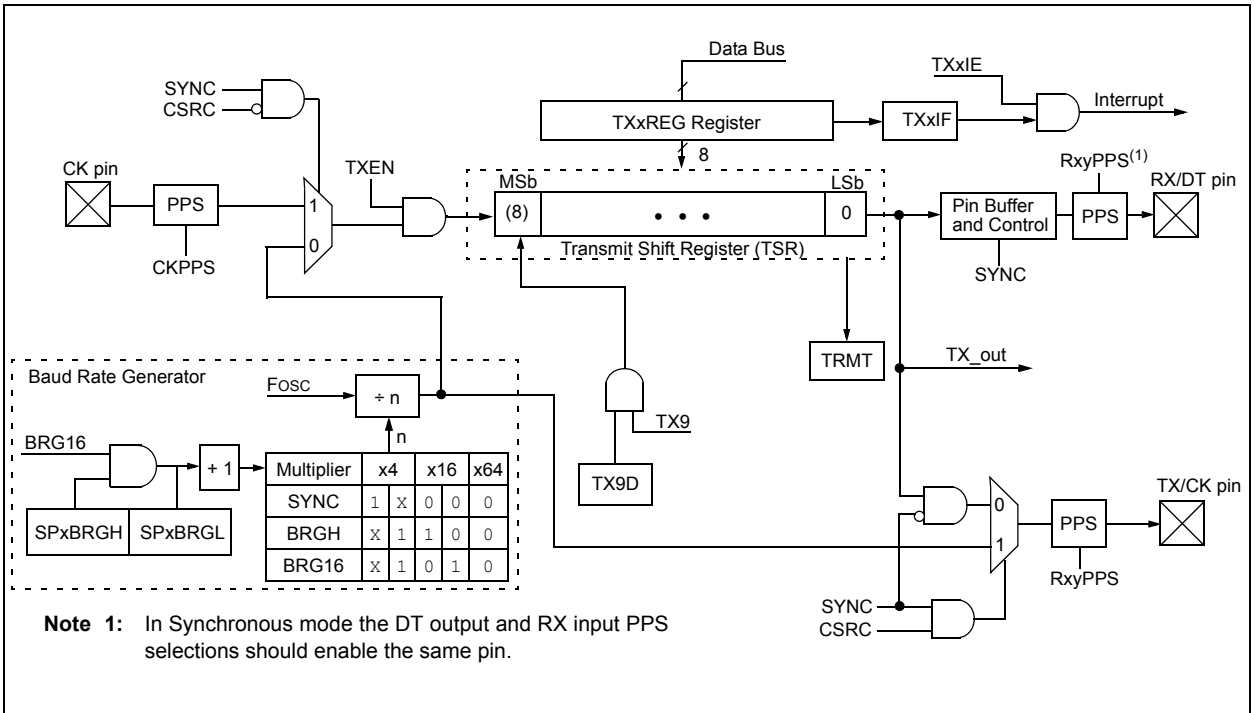

FIGURE 34-2: EUSART RECEIVE BLOCK DIAGRAM

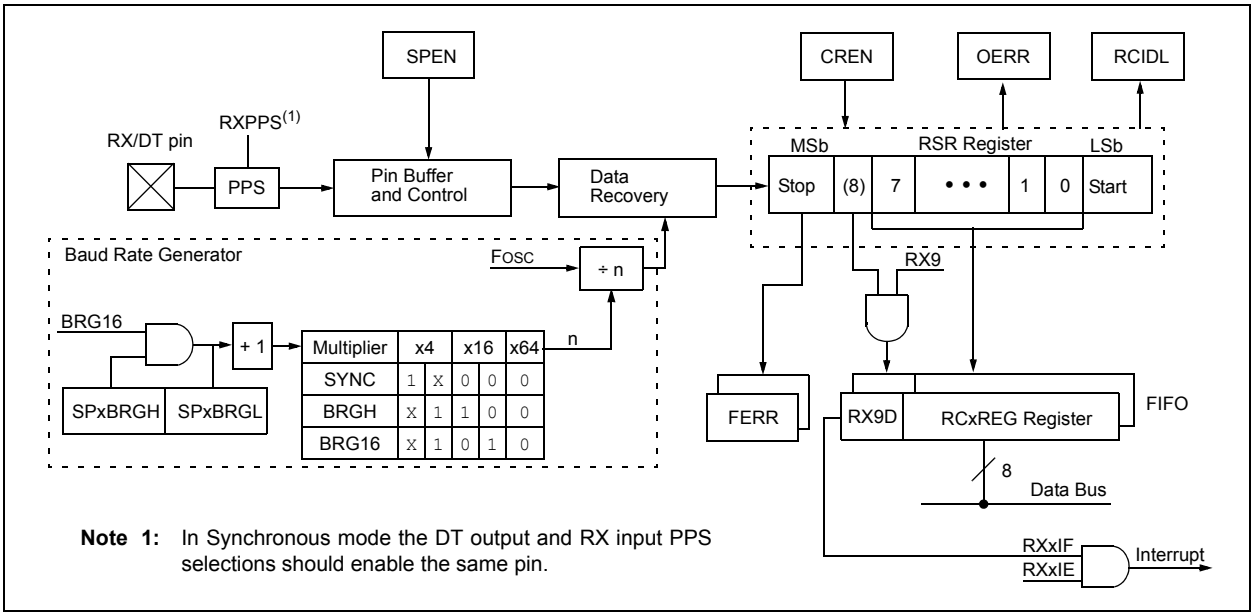

Note 1: In Synchronous mode the DT output and RX input PPS selections should enable the same pin.

The operation of the EUSART module is controlled through three registers:

- Transmit Status and Control (TXxSTA)
- Receive Status and Control (RCxSTA)
- Baud Rate Control (BAUDxCON)

These registers are detailed in Register 34-1, Register 34-2 and Register 34-3, respectively.

The RX input pin is selected with the RXPPS. The CK input is selected with the TXPPS register. TX, CK, and DT output pins are selected with each pin's RxyPPS register. Since the RX input is coupled with the DT output in Synchronous mode, it is the user's responsibility to select the same pin for both of these functions when operating in Synchronous mode. The EUSART control logic will control the data direction drivers automatically.

34.1 EUSART Asynchronous Mode

The EUSART transmits and receives data using the standard non-return-to-zero (NRZ) format. NRZ is implemented with two levels: a VOH Mark state which represents a '1' data bit, and a VOL Space state which represents a '0' data bit. NRZ refers to the fact that consecutively transmitted data bits of the same value stay at the output level of that bit without returning to a neutral level between each bit transmission. An NRZ transmission port idles in the Mark state. Each character transmission consists of one Start bit followed by eight or nine data bits and is always terminated by one or more Stop bits. The Start bit is always a space and the Stop bits are always marks. The most common data format is eight bits. Each transmitted bit persists for a period of 1/(Baud Rate). An on-chip dedicated 8-bit/16-bit Baud Rate Generator is used to derive standard baud rate frequencies from the system oscillator. See Table 34-3 for examples of baud rate configurations.

The EUSART transmits and receives the LSb first. The EUSART's transmitter and receiver are functionally independent, but share the same data format and baud rate. Parity is not supported by the hardware, but can be implemented in software and stored as the ninth data bit.

34.1.1 EUSART ASYNCHRONOUS TRANSMITTER

The EUSART transmitter block diagram is shown in Figure 34-1. The heart of the transmitter is the serial Transmit Shift Register (TSR), which is not directly accessible by software. The TSR obtains its data from the transmit buffer, which is the TXxREG register.

34.1.1.1 Enabling the Transmitter

The EUSART transmitter is enabled for asynchronous operations by configuring the following three control bits:

- TXEN = 1
- SYNC = 0
- SPEN = 1

All other EUSART control bits are assumed to be in their default state.

Setting the TXEN bit of the TXxSTA register enables the transmitter circuitry of the EUSART. Clearing the SYNC bit of the TXxSTA register configures the EUSART for asynchronous operation. Setting the SPEN bit of the RCxSTA register enables the EUSART and automatically configures the TX/CK I/O pin as an output. If the TX/CK pin is shared with an analog peripheral, the analog I/O function must be disabled by clearing the corresponding ANSEL bit.

Note:	The TXxIF Transmitter Interrupt flag is set when the TXEN enable bit is set.

34.1.1.2 Transmitting Data

A transmission is initiated by writing a character to the TXxREG register. If this is the first character, or the previous character has been completely flushed from the TSR, the data in the TXxREG is immediately transferred to the TSR register. If the TSR still contains all or part of a previous character, the new character data is held in the TXxREG until the Stop bit of the previous character has been transmitted. The pending character in the TXxREG is then transferred to the TSR in one TCY immediately following the Stop bit transmission. The transmission of the Start bit, data bits and Stop bit sequence commences immediately following the transfer of the data to the TSR from the TXxREG.

34.1.1.3 Transmit Data Polarity

The polarity of the transmit data can be controlled with the SCKP bit of the BAUDxCON register. The default state of this bit is '0' which selects high true transmit idle and data bits. Setting the SCKP bit to '1' will invert the transmit data resulting in low true idle and data bits. The SCKP bit controls transmit data polarity in Asynchronous mode only. In Synchronous mode, the SCKP bit has a different function. See **Section 34.4.1.2 "Clock Polarity"**.

34.1.1.4 Transmit Interrupt Flag

The TXxIF interrupt flag bit of the PIR3 register is set whenever the EUSART transmitter is enabled and no character is being held for transmission in the TXxREG. In other words, the TXxIF bit is only clear when the TSR is busy with a character and a new character has been queued for transmission in the TXxREG. The TXxIF flag bit is not cleared immediately upon writing TXxREG. TXxIF becomes valid in the second instruction cycle following the write execution. Polling TXxIF immediately following the TXxREG write will return invalid results. The TXxIF bit is read-only, it cannot be set or cleared by software.

The TXxIF interrupt can be enabled by setting the TXxIE interrupt enable bit of the PIE3 register. However, the TXxIF flag bit will be set whenever the TXxREG is empty, regardless of the state of TXxIE enable bit.

To use interrupts when transmitting data, set the TXxIE bit only when there is more data to send. Clear the TXxIE interrupt enable bit upon writing the last character of the transmission to the TXxREG.

34.1.1.5 TSR Status

The TRMT bit of the TXxSTA register indicates the status of the TSR register. This is a read-only bit. The TRMT bit is set when the TSR register is empty and is cleared when a character is transferred to the TSR register from the TXxREG. The TRMT bit remains clear until all bits have been shifted out of the TSR register. No interrupt logic is tied to this bit, so the user has to poll this bit to determine the TSR status.

Note:	The TSR register is not mapped in data memory, so it is not available to the user.

34.1.1.6 Transmitting 9-Bit Characters

The EUSART supports 9-bit character transmissions. When the TX9 bit of the TXxSTA register is set, the EUSART will shift nine bits out for each character transmitted. The TX9D bit of the TXxSTA register is the ninth, and Most Significant data bit. When transmitting 9-bit data, the TX9D data bit must be written before writing the eight Least Significant bits into the TXxREG. All nine bits of data will be transferred to the TSR shift register immediately after the TXxREG is written.

A special 9-bit Address mode is available for use with multiple receivers. See **Section 34.1.2.7 "Address Detection"** for more information on the Address mode.

34.1.1.7 Asynchronous Transmission Set-up:

1. Initialize the SPxBRGH, SPxBRGL register pair and the BRGH and BRG16 bits to achieve the desired baud rate (see **Section 34.3 "EUSART Baud Rate Generator (BRG)"**).
2. Enable the asynchronous serial port by clearing the SYNC bit and setting the SPEN bit.
3. If 9-bit transmission is desired, set the TX9 control bit. A set ninth data bit will indicate that the eight Least Significant data bits are an address when the receiver is set for address detection.
4. Set SCKP bit if inverted transmit is desired.
5. Enable the transmission by setting the TXEN control bit. This will cause the TXxIF interrupt bit to be set.
6. If interrupts are desired, set the TXxIE interrupt enable bit of the PIE3 register. An interrupt will occur immediately provided that the GIE and PEIE bits of the INTCON register are also set.
7. If 9-bit transmission is selected, the ninth bit should be loaded into the TX9D data bit.
8. Load 8-bit data into the TXxREG register. This will start the transmission.

FIGURE 34-3: ASYNCHRONOUS TRANSMISSION

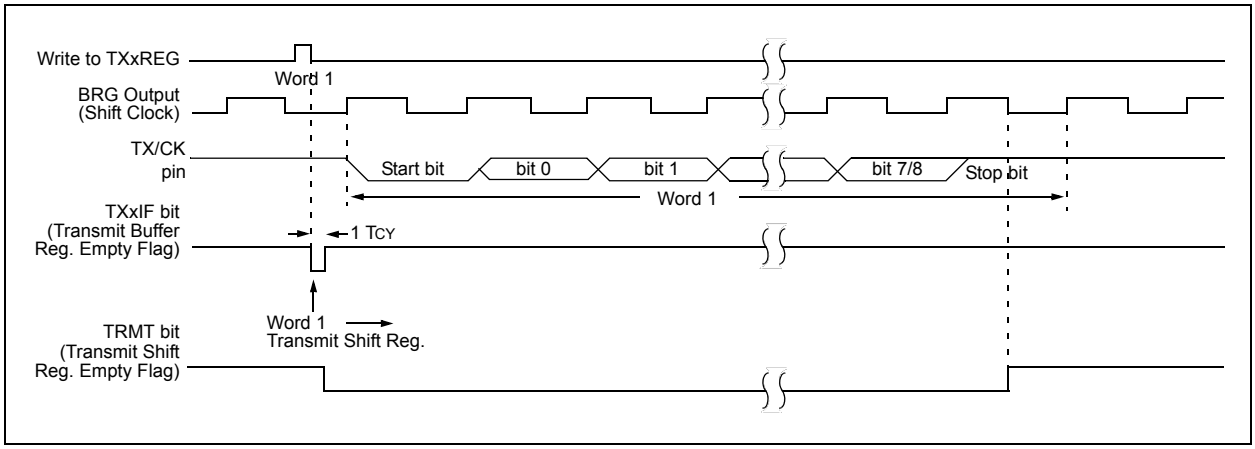

FIGURE 34-4: ASYNCHRONOUS TRANSMISSION (BACK-TO-BACK)

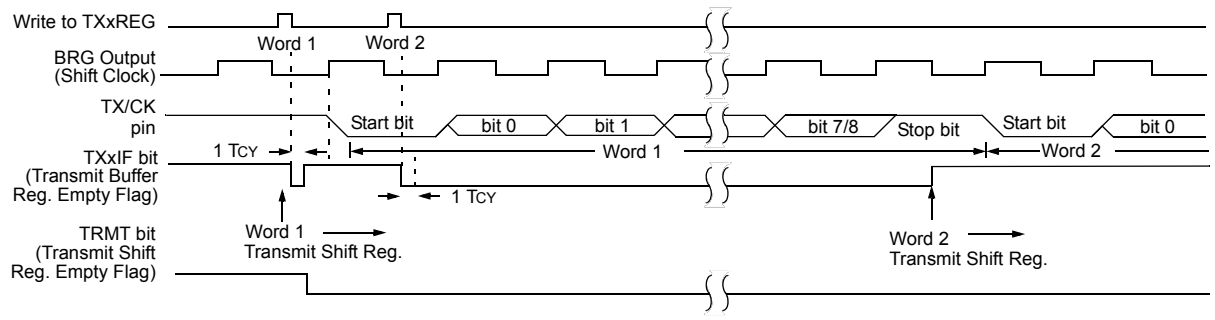

Note: This timing diagram shows two consecutive transmissions.

34.1.2 EUSART ASYNCHRONOUS RECEIVER

The Asynchronous mode is typically used in RS-232 systems. The receiver block diagram is shown in Figure 34-2. The data is received on the RX/DT pin and drives the data recovery block. The data recovery block is actually a high-speed shifter operating at 16 times the baud rate, whereas the serial Receive Shift Register (RSR) operates at the bit rate. When all eight or nine bits of the character have been shifted in, they are immediately transferred to a two character First-In-First-Out (FIFO) memory. The FIFO buffering allows reception of two complete characters and the start of a third character before software must start servicing the EUSART receiver. The FIFO and RSR registers are not directly accessible by software. Access to the received data is via the RCxREG register.

34.1.2.1 Enabling the Receiver

The EUSART receiver is enabled for asynchronous operation by configuring the following three control bits:

- CREN = 1
- SYNC = 0
- SPEN = 1

All other EUSART control bits are assumed to be in their default state.

Setting the CREN bit of the RCxSTA register enables the receiver circuitry of the EUSART. Clearing the SYNC bit of the TXxSTA register configures the EUSART for asynchronous operation. Setting the SPEN bit of the RCxSTA register enables the EUSART. The programmer must set the corresponding TRIS bit to configure the RX/DT I/O pin as an input.

Note:	If the RX/DT function is on an analog pin, the corresponding ANSEL bit must be cleared for the receiver to function.

34.1.2.2 Receiving Data

The receiver data recovery circuit initiates character reception on the falling edge of the first bit. The first bit, also known as the Start bit, is always a zero. The data recovery circuit counts one-half bit time to the center of the Start bit and verifies that the bit is still a zero. If it is not a zero then the data recovery circuit aborts character reception, without generating an error, and resumes looking for the falling edge of the Start bit. If the Start bit zero verification succeeds then the data recovery circuit counts a full bit time to the center of the next bit. The bit is then sampled by a majority detect circuit and the resulting '0' or '1' is shifted into the RSR. This repeats until all data bits have been sampled and shifted into the RSR. One final bit time is measured and the level sampled. This is the Stop bit, which is always a '1'. If the data recovery circuit samples a '0' in the Stop bit position then a framing error is set for this character, otherwise the framing error is cleared for this character. See **Section 34.1.2.4 "Receive Framing Error"** for more information on framing errors.

Immediately after all data bits and the Stop bit have been received, the character in the RSR is transferred to the EUSART receive FIFO and the RXxIF interrupt flag bit of the PIR3 register is set. The top character in the FIFO is transferred out of the FIFO by reading the RCxREG register.

Note:	If the receive FIFO is overrun, no additional characters will be received until the overrun condition is cleared. See **Section 34.1.2.5 "Receive Overrun Error"** for more information on overrun errors.

34.1.2.3 Receive Interrupts

The RXxIF interrupt flag bit of the PIR3 register is set whenever the EUSART receiver is enabled and there is an unread character in the receive FIFO. The RXxIF interrupt flag bit is read-only, it cannot be set or cleared by software.

RXxIF interrupts are enabled by setting all of the following bits:

- RXxIE, Interrupt Enable bit of the PIE3 register
- PEIE, Peripheral Interrupt Enable bit of the INTCON register
- GIE, Global Interrupt Enable bit of the INTCON register

The RXxIF interrupt flag bit will be set when there is an unread character in the FIFO, regardless of the state of interrupt enable bits.

34.1.2.4 Receive Framing Error

Each character in the receive FIFO buffer has a corresponding framing error Status bit. A framing error indicates that a Stop bit was not seen at the expected time. The framing error status is accessed via the FERR bit of the RCxSTA register. The FERR bit represents the status of the top unread character in the receive FIFO. Therefore, the FERR bit must be read before reading the RCxREG.

The FERR bit is read-only and only applies to the top unread character in the receive FIFO. A framing error (FERR = 1) does not preclude reception of additional characters. It is not necessary to clear the FERR bit. Reading the next character from the FIFO buffer will advance the FIFO to the next character and the next corresponding framing error.

The FERR bit can be forced clear by clearing the SPEN bit of the RCxSTA register which resets the EUSART. Clearing the CREN bit of the RCxSTA register does not affect the FERR bit. A framing error by itself does not generate an interrupt.

Note:	If all receive characters in the receive FIFO have framing errors, repeated reads of the RCxREG will not clear the FERR bit.

34.1.2.5 Receive Overrun Error

The receive FIFO buffer can hold two characters. An overrun error will be generated if a third character, in its entirety, is received before the FIFO is accessed. When this happens the OERR bit of the RCxSTA register is set. The characters already in the FIFO buffer can be read but no additional characters will be received until the error is cleared. The error must be cleared by either clearing the CREN bit of the RCxSTA register or by resetting the EUSART by clearing the SPEN bit of the RCxSTA register.

34.1.2.6 Receiving 9-Bit Characters

The EUSART supports 9-bit character reception. When the RX9 bit of the RCxSTA register is set the EUSART will shift nine bits into the RSR for each character received. The RX9D bit of the RCxSTA register is the ninth and Most Significant data bit of the top unread character in the receive FIFO. When reading 9-bit data from the receive FIFO buffer, the RX9D data bit must be read before reading the eight Least Significant bits from the RCxREG.

34.1.2.7 Address Detection

A special Address Detection mode is available for use when multiple receivers share the same transmission line, such as in RS-485 systems. Address detection is enabled by setting the ADDEN bit of the RCxSTA register.

Address detection requires 9-bit character reception. When address detection is enabled, only characters with the ninth data bit set will be transferred to the receive FIFO buffer, thereby setting the RXxIF interrupt bit. All other characters will be ignored.

Upon receiving an address character, user software determines if the address matches its own. Upon address match, user software must disable address detection by clearing the ADDEN bit before the next Stop bit occurs. When user software detects the end of the message, determined by the message protocol used, software places the receiver back into the Address Detection mode by setting the ADDEN bit.

34.1.2.8 Asynchronous Reception Setup:

1. Initialize the SPxBRGH, SPxBRGL register pair and the BRGH and BRG16 bits to achieve the desired baud rate (see **Section 34.3 "EUSART Baud Rate Generator (BRG)"**).
2. Clear the ANSEL bit for the RX pin (if applicable).
3. Enable the serial port by setting the SPEN bit. The SYNC bit must be clear for asynchronous operation.
4. If interrupts are desired, set the RXxIE bit of the PIE3 register and the GIE and PEIE bits of the INTCON register.
5. If 9-bit reception is desired, set the RX9 bit.
6. Enable reception by setting the CREN bit.
7. The RXxIF interrupt flag bit will be set when a character is transferred from the RSR to the receive buffer. An interrupt will be generated if the RXxIE interrupt enable bit was also set.
8. Read the RCxSTA register to get the error flags and, if 9-bit data reception is enabled, the ninth data bit.
9. Get the received eight Least Significant data bits from the receive buffer by reading the RCxREG register.
10. If an overrun occurred, clear the OERR flag by clearing the CREN receiver enable bit.

34.1.2.9 9-bit Address Detection Mode Setup

This mode would typically be used in RS-485 systems. To set up an Asynchronous Reception with Address Detect Enable:

1. Initialize the SPxBRGH, SPxBRGL register pair and the BRGH and BRG16 bits to achieve the desired baud rate (see **Section 34.3 "EUSART Baud Rate Generator (BRG)"**).
2. Clear the ANSEL bit for the RX pin (if applicable).
3. Enable the serial port by setting the SPEN bit. The SYNC bit must be clear for asynchronous operation.
4. If interrupts are desired, set the RXxIE bit of the PIE3 register and the GIE and PEIE bits of the INTCON register.
5. Enable 9-bit reception by setting the RX9 bit.
6. Enable address detection by setting the ADDEN bit.
7. Enable reception by setting the CREN bit.
8. The RXxIF interrupt flag bit will be set when a character with the ninth bit set is transferred from the RSR to the receive buffer. An interrupt will be generated if the RXxIE interrupt enable bit was also set.
9. Read the RCxSTA register to get the error flags. The ninth data bit will always be set.
10. Get the received eight Least Significant data bits from the receive buffer by reading the RCxREG register. Software determines if this is the device's address.
11. If an overrun occurred, clear the OERR flag by clearing the CREN receiver enable bit.
12. If the device has been addressed, clear the ADDEN bit to allow all received data into the receive buffer and generate interrupts.

FIGURE 34-5: ASYNCHRONOUS RECEPTION

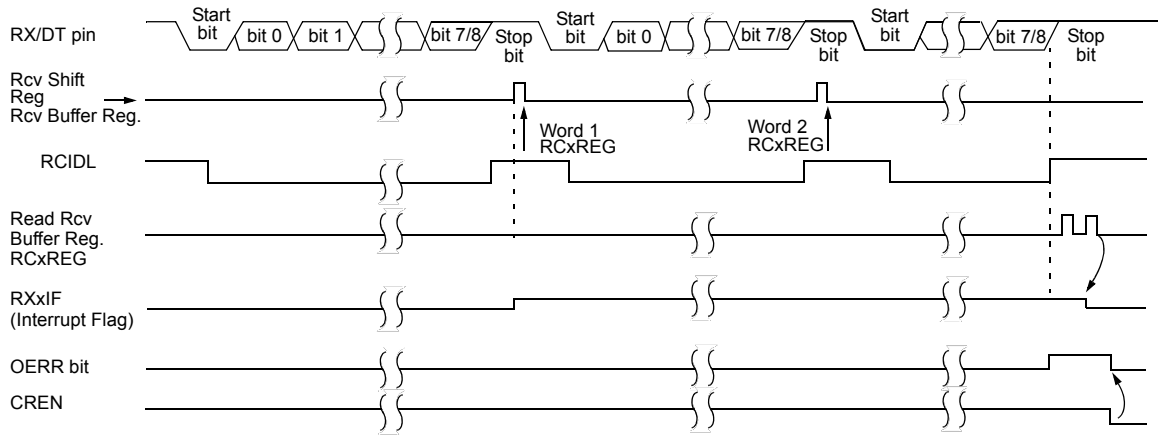

Note: This timing diagram shows three words appearing on the RX input. The RCxREG (receive buffer) is read after the third word, causing the OERR (overrun) bit to be set.

34.2 Clock Accuracy with Asynchronous Operation

The factory calibrates the internal oscillator block output (INTOSC). However, the INTOSC frequency may drift as VDD or temperature changes, and this directly affects the asynchronous baud rate. Two methods may be used to adjust the baud rate clock, but both require a reference clock source of some kind.

The first (preferred) method uses the OSCTUNE register to adjust the INTOSC output. Adjusting the value in the OSCTUNE register allows for fine resolution changes to the system clock source. See **Section 9.2.2.2 "Internal Oscillator Frequency Adjustment"** for more information.

The other method adjusts the value in the Baud Rate Generator. This can be done automatically with the Auto-Baud Detect feature (see **Section 34.3.1 "Auto-Baud Detect"**). There may not be fine enough resolution when adjusting the Baud Rate Generator to compensate for a gradual change in the peripheral clock frequency.

34.3 EUSART Baud Rate Generator (BRG)

The Baud Rate Generator (BRG) is an 8-bit or 16-bit timer that is dedicated to the support of both the asynchronous and synchronous EUSART operation. By default, the BRG operates in 8-bit mode. Setting the BRG16 bit of the BAUDxCON register selects 16-bit mode.

The SPxBRGH, SPxBRGL register pair determines the period of the free running baud rate timer. In Asynchronous mode the multiplier of the baud rate period is determined by both the BRGH bit of the TXxSTA register and the BRG16 bit of the BAUDxCON register. In Synchronous mode, the BRGH bit is ignored.

Table 34-1 contains the formulas for determining the baud rate. Example 34-1 provides a sample calculation for determining the baud rate and baud rate error.

Typical baud rates and error values for various Asynchronous modes have been computed for your convenience and are shown in Table 34-3. It may be advantageous to use the high baud rate (BRGH = 1), or the 16-bit BRG (BRG16 = 1) to reduce the baud rate error. The 16-bit BRG mode is used to achieve slow baud rates for fast oscillator frequencies.

Writing a new value to the SPxBRGH, SPxBRGL register pair causes the BRG timer to be reset (or cleared). This ensures that the BRG does not wait for a timer overflow before outputting the new baud rate.

If the system clock is changed during an active receive operation, a receive error or data loss may result. To avoid this problem, check the status of the RCIDL bit to make sure that the receive operation is idle before changing the system clock.

EXAMPLE 34-1: CALCULATING BAUD RATE ERROR

For a device with FOSC of 16 MHz, desired baud rate of 9600, Asynchronous mode, 8-bit BRG:

$$\text{Desired Baud Rate} = \frac{F_{OSC}}{64([SPBRGH:SPBRGL] + 1)}$$

Solving for SPxBRGH:SPxBRGL:

$$X = \frac{\frac{F_{OSC}}{\text{Desired Baud Rate}}}{64} - 1$$

$$= \frac{\frac{16000000}{9600}}{64} - 1$$

$$= [25.042] = 25$$

$$\text{Calculated Baud Rate} = \frac{16000000}{64(25 + 1)}$$

$$= 9615$$

$$\text{Error} = \frac{\text{Calc. Baud Rate} - \text{Desired Baud Rate}}{\text{Desired Baud Rate}}$$

$$= \frac{(9615 - 9600)}{9600} = 0.16\%$$

34.3.1 AUTO-BAUD DETECT

The EUSART module supports automatic detection and calibration of the baud rate.

In the Auto-Baud Detect (ABD) mode, the clock to the BRG is reversed. Rather than the BRG clocking the incoming RX signal, the RX signal is timing the BRG. The Baud Rate Generator is used to time the period of a received 55h (ASCII "U") which is the Sync character for the LIN bus. The unique feature of this character is that it has five rising edges including the Stop bit edge.

Setting the ABDEN bit of the BAUDxCON register starts the auto-baud calibration sequence. While the ABD sequence takes place, the EUSART state machine is held in Idle. On the first rising edge of the receive line, after the Start bit, the SPxBRG begins counting up using the BRG counter clock as shown in Figure 34-6. The fifth rising edge will occur on the RX pin at the end of the eighth bit period. At that time, an accumulated value totaling the proper BRG period is left in the SPxBRGH, SPxBRGL register pair, the ABDEN bit is automatically cleared and the RXxIF interrupt flag is set. The value in the RCxREG needs to be read to clear the RXxIF interrupt. RCxREG content should be discarded. When calibrating for modes that do not use the SPxBRGH register the user can verify that the SPxBRGL register did not overflow by checking for 00h in the SPxBRGH register.

The BRG auto-baud clock is determined by the BRG16 and BRGH bits as shown in Table 34-1. During ABD, both the SPxBRGH and SPxBRGL registers are used as a 16-bit counter, independent of the BRG16 bit setting. While calibrating the baud rate period, the SPxBRGH and SPxBRGL registers are clocked at 1/8th the BRG base clock rate. The resulting byte measurement is the average bit time when clocked at full speed.

Note 1: If the WUE bit is set with the ABDEN bit, auto-baud detection will occur on the byte following the Break character (see **Section 34.3.3 "Auto-Wake-up on Break"**).

2: It is up to the user to determine that the incoming character baud rate is within the range of the selected BRG clock source. Some combinations of oscillator frequency and EUSART baud rates are not possible.

3: During the auto-baud process, the auto-baud counter starts counting at one. Upon completion of the auto-baud sequence, to achieve maximum accuracy, subtract 1 from the SPxBRGH:SPxBRGL register pair.

TABLE 34-1: BRG COUNTER CLOCK RATES

BRG16	BRGH	BRG Base Clock	BRG ABD Clock
0	0	FOSC/64	FOSC/512
0	1	FOSC/16	FOSC/128
1	0	FOSC/16	FOSC/128
1	1	FOSC/4	FOSC/32

Note: During the ABD sequence, SPxBRGL and SPxBRGH registers are both used as a 16-bit counter, independent of the BRG16 setting.

FIGURE 34-6: AUTOMATIC BAUD RATE CALIBRATION

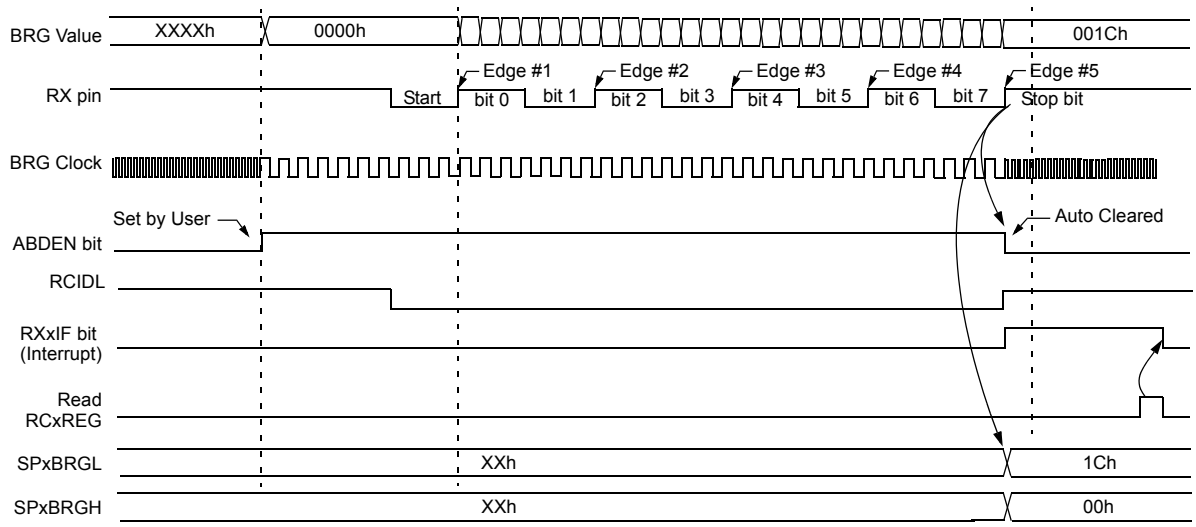

Note 1: The ABD sequence requires the **EUSART** module to be configured in Asynchronous mode.

34.3.2 AUTO-BAUD OVERFLOW

During the course of automatic baud detection, the ABDOVF bit of the BAUDxCON register will be set if the baud rate counter overflows before the fifth rising edge is detected on the RX pin. The ABDOVF bit indicates that the counter has exceeded the maximum count that can fit in the 16 bits of the SPxBRGH:SPxBRGL register pair. The overflow condition will set the RXxIF flag. The counter continues to count until the fifth rising edge is detected on the RX pin. The RCIDL bit will remain false ('0') until the fifth rising edge at which time the RCIDL bit will be set. If the RCxREG is read after the overflow occurs but before the fifth rising edge then the fifth rising edge will set the RXxIF again.

Terminating the auto-baud process early to clear an overflow condition will prevent proper detection of the sync character fifth rising edge. If any falling edges of the sync character have not yet occurred when the ABDEN bit is cleared then those will be falsely detected as Start bits. The following steps are recommended to clear the overflow condition:

1. Read RCxREG to clear RXxIF.
2. If RCIDL is '0' then wait for RDCIF and repeat step 1.
3. Clear the ABDOVF bit.

34.3.3 AUTO-WAKE-UP ON BREAK

During Sleep mode, all clocks to the EUSART are suspended. Because of this, the Baud Rate Generator is inactive and a proper character reception cannot be performed. The Auto-Wake-up feature allows the controller to wake-up due to activity on the RX/DT line. This feature is available only in Asynchronous mode.

The Auto-Wake-up feature is enabled by setting the WUE bit of the BAUDxCON register. Once set, the normal receive sequence on RX/DT is disabled, and the EUSART remains in an Idle state, monitoring for a wake-up event independent of the CPU mode. A wake-up event consists of a high-to-low transition on the RX/DT line. (This coincides with the start of a Sync Break or a wake-up signal character for the LIN protocol.)

The EUSART module generates an RXxIF interrupt coincident with the wake-up event. The interrupt is generated synchronously to the Q clocks in normal CPU operating modes (Figure 34-7), and asynchronously if the device is in Sleep mode (Figure 34-8). The interrupt condition is cleared by reading the RCxREG register.

The WUE bit is automatically cleared by the low-to-high transition on the RX line at the end of the Break. This signals to the user that the Break event is over. At this point, the EUSART module is in Idle mode waiting to receive the next character.

34.3.3.1 Special Considerations

Break Character

To avoid character errors or character fragments during a wake-up event, the wake-up character must be all zeros.

When the wake-up is enabled the function works independent of the low time on the data stream. If the WUE bit is set and a valid non-zero character is received, the low time from the Start bit to the first rising edge will be interpreted as the wake-up event. The remaining bits in the character will be received as a fragmented character and subsequent characters can result in framing or overrun errors.

Therefore, the initial character in the transmission must be all '0's. This must be ten or more bit times, 13-bit times recommended for LIN bus, or any number of bit times for standard RS-232 devices.

Oscillator Start-up Time

Oscillator start-up time must be considered, especially in applications using oscillators with longer start-up intervals (i.e., LP, XT or HS/PLL mode). The Sync Break (or wake-up signal) character must be of sufficient length, and be followed by a sufficient interval, to allow enough time for the selected oscillator to start and provide proper initialization of the EUSART.

WUE Bit

The wake-up event causes a receive interrupt by setting the RXxIF bit. The WUE bit is cleared in hardware by a rising edge on RX/DT. The interrupt condition is then cleared in software by reading the RCxREG register and discarding its contents.

To ensure that no actual data is lost, check the RCIDL bit to verify that a receive operation is not in process before setting the WUE bit. If a receive operation is not occurring, the WUE bit may then be set just prior to entering the Sleep mode.

FIGURE 34-7: AUTO-WAKE-UP BIT (WUE) TIMING DURING NORMAL OPERATION

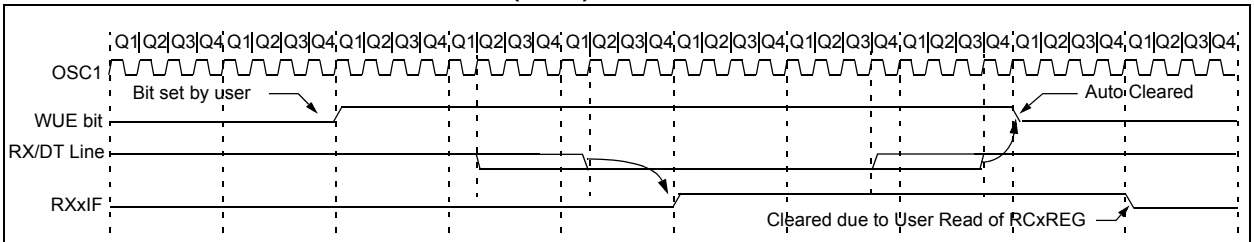

Note 1: The **EUSART** remains in Idle while the WUE bit is set.

FIGURE 34-8: AUTO-WAKE-UP BIT (WUE) TIMINGS DURING SLEEP

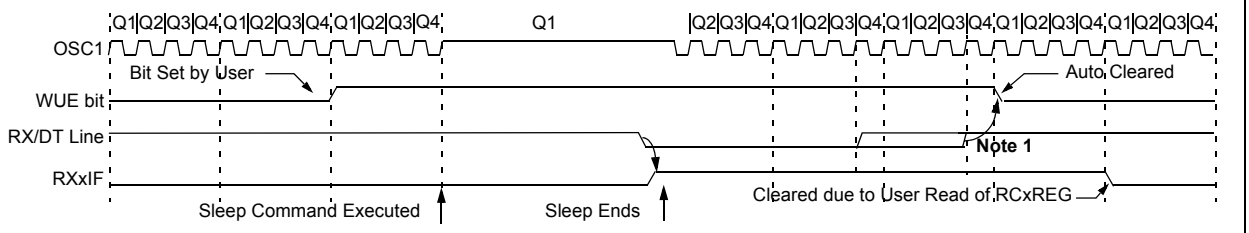

Note 1: If the wake-up event requires long oscillator warm-up time, the automatic clearing of the WUE bit can occur while the `stposc` signal is still active. This sequence should not depend on the presence of Q clocks.

2: The **EUSART** remains in Idle while the WUE bit is set.

34.3.4 BREAK CHARACTER SEQUENCE

The EUSART module has the capability of sending the special Break character sequences that are required by the LIN bus standard. A Break character consists of a Start bit, followed by 12 ‘`0`’ bits and a Stop bit.

To send a Break character, set the SENDB and TXEN bits of the TXxSTA register. The Break character transmission is then initiated by a write to the TXxREG. The value of data written to TXxREG will be ignored and all ‘`0`’s will be transmitted.

The SENDB bit is automatically reset by hardware after the corresponding Stop bit is sent. This allows the user to preload the transmit FIFO with the next transmit byte following the Break character (typically, the Sync character in the LIN specification).

The TRMT bit of the TXxSTA register indicates when the transmit operation is active or idle, just as it does during normal transmission. See Figure 34-9 for the timing of the Break character sequence.

34.3.4.1 Break and Sync Transmit Sequence

The following sequence will start a message frame header made up of a Break, followed by an auto-baud Sync byte. This sequence is typical of a LIN bus master.

1. Configure the EUSART for the desired mode.
2. Set the TXEN and SENDB bits to enable the Break sequence.
3. Load the TXxREG with a dummy character to initiate transmission (the value is ignored).
4. Write ‘55h’ to TXxREG to load the Sync character into the transmit FIFO buffer.
5. After the Break has been sent, the SENDB bit is reset by hardware and the Sync character is then transmitted.

When the TXxREG becomes empty, as indicated by the TXxIF, the next data byte can be written to TXxREG.

34.3.5 RECEIVING A BREAK CHARACTER

The Enhanced EUSART module can receive a Break character in two ways.

The first method to detect a Break character uses the FERR bit of the RCxSTA register and the received data as indicated by RCxREG. The Baud Rate Generator is assumed to have been initialized to the expected baud rate.

A Break character has been received when:

- RXxIF bit is set
- FERR bit is set
- RCxREG = 00h

The second method uses the Auto-Wake-up feature described in **Section 34.3.3 "Auto-Wake-up on Break"**. By enabling this feature, the EUSART will sample the next two transitions on RX/DT, cause an RXxIF interrupt, and receive the next data byte followed by another interrupt.

Note that following a Break character, the user will typically want to enable the Auto-Baud Detect feature. For both methods, the user can set the ABDEN bit of the BAUDxCON register before placing the EUSART in Sleep mode.

FIGURE 34-9: SEND BREAK CHARACTER SEQUENCE

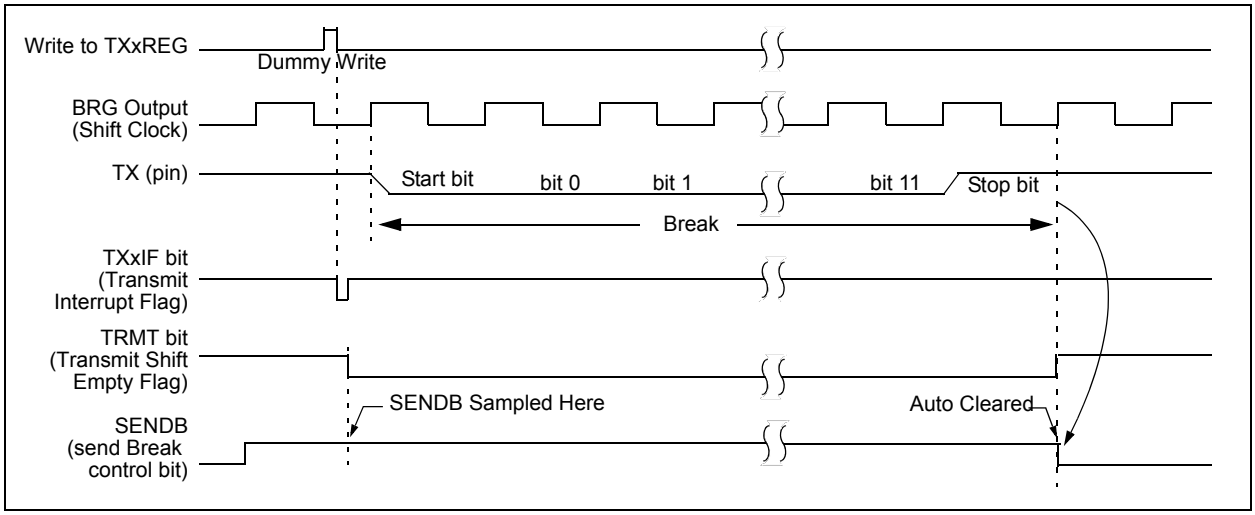

34.4 EUSART Synchronous Mode

Synchronous serial communications are typically used in systems with a single master and one or more slaves. The master device contains the necessary circuitry for baud rate generation and supplies the clock for all devices in the system. Slave devices can take advantage of the master clock by eliminating the internal clock generation circuitry.

There are two signal lines in Synchronous mode: a bidirectional data line and a clock line. Slaves use the external clock supplied by the master to shift the serial data into and out of their respective receive and transmit shift registers. Since the data line is bidirectional, synchronous operation is half-duplex only. Half-duplex refers to the fact that master and slave devices can receive and transmit data but not both simultaneously. The EUSART can operate as either a master or slave device.

Start and Stop bits are not used in synchronous transmissions.

34.4.1 SYNCHRONOUS MASTER MODE

The following bits are used to configure the EUSART for synchronous master operation:

- SYNC = 1
- CSRC = 1
- SREN = 0 (for transmit); SREN = 1 (for receive)
- CREN = 0 (for transmit); CREN = 1 (for receive)
- SPEN = 1

Setting the SYNC bit of the TXxSTA register configures the device for synchronous operation. Setting the CSRC bit of the TXxSTA register configures the device as a master. Clearing the SREN and CREN bits of the RCxSTA register ensures that the device is in the Transmit mode, otherwise the device will be configured to receive. Setting the SPEN bit of the RCxSTA register enables the EUSART.

34.4.1.1 Master Clock

Synchronous data transfers use a separate clock line, which is synchronous with the data. A device configured as a master transmits the clock on the TX/CK line. The TX/CK pin output driver is automatically enabled when the EUSART is configured for synchronous transmit or receive operation. Serial data bits change on the leading edge to ensure they are valid at the trailing edge of each clock. One clock cycle is generated for each data bit. Only as many clock cycles are generated as there are data bits.

34.4.1.2 Clock Polarity

A clock polarity option is provided for Microwire compatibility. Clock polarity is selected with the SCKP bit of the BAUDxCON register. Setting the SCKP bit sets the clock Idle state as high. When the SCKP bit is set, the data changes on the falling edge of each clock. Clearing the SCKP bit sets the Idle state as low. When the SCKP bit is cleared, the data changes on the rising edge of each clock.

34.4.1.3 Synchronous Master Transmission

Data is transferred out of the device on the RX/DT pin. The RX/DT and TX/CK pin output drivers are automatically enabled when the EUSART is configured for synchronous master transmit operation.

A transmission is initiated by writing a character to the TXxREG register. If the TSR still contains all or part of a previous character the new character data is held in the TXxREG until the last bit of the previous character has been transmitted. If this is the first character, or the previous character has been completely flushed from the TSR, the data in the TXxREG is immediately transferred to the TSR. The transmission of the character commences immediately following the transfer of the data to the TSR from the TXxREG.

Each data bit changes on the leading edge of the master clock and remains valid until the subsequent leading clock edge.

Note:	The TSR register is not mapped in data memory, so it is not available to the user.

34.4.1.4 Synchronous Master Transmission Set-up:

1. Initialize the SPxBRGH, SPxBRGL register pair and the BRGH and BRG16 bits to achieve the desired baud rate (see **Section 34.3 “EUSART Baud Rate Generator (BRG)”**).
2. Enable the synchronous master serial port by setting bits SYNC, SPEN and CSRC.
3. Disable Receive mode by clearing bits SREN and CREN.
4. Enable Transmit mode by setting the TXEN bit.
5. If 9-bit transmission is desired, set the TX9 bit.
6. If interrupts are desired, set the TXxIE bit of the PIE3 register and the GIE and PEIE bits of the INTCON register.
7. If 9-bit transmission is selected, the ninth bit should be loaded in the TX9D bit.
8. Start transmission by loading data to the TXxREG register.

FIGURE 34-10: SYNCHRONOUS TRANSMISSION

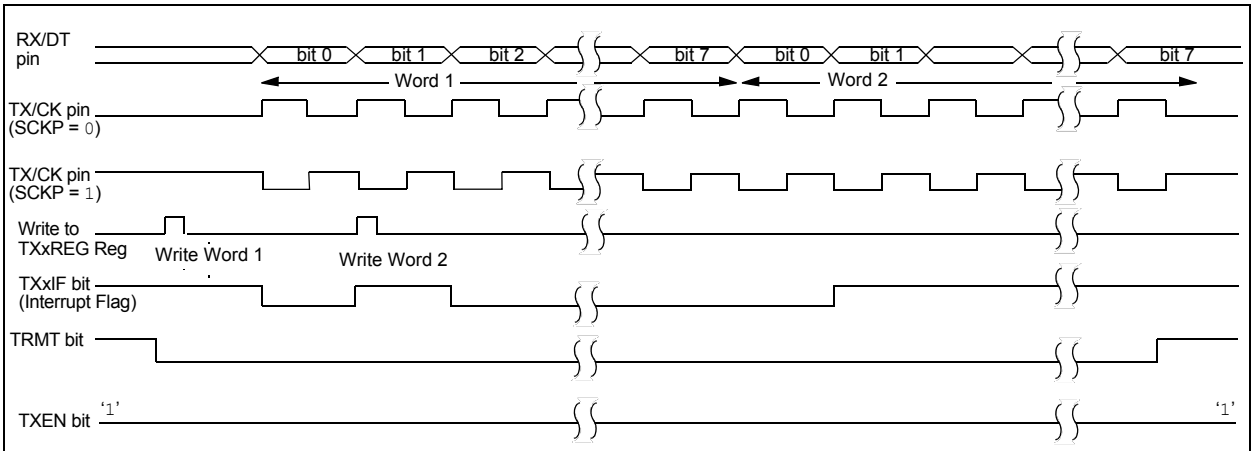

Note: Sync Master mode, SPxBRGL = 0, continuous transmission of two 8-bit words.

FIGURE 34-11: SYNCHRONOUS TRANSMISSION (THROUGH TXEN)

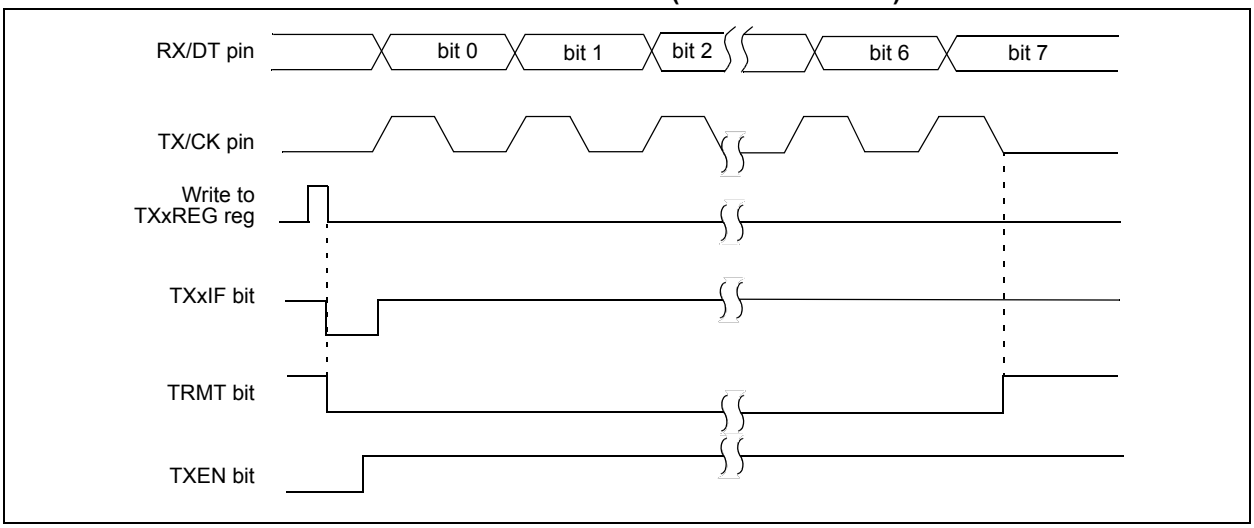

34.4.1.5 Synchronous Master Reception

Data is received at the RX/DT pin. The RX/DT pin output driver is automatically disabled when the EUSART is configured for synchronous master receive operation.

In Synchronous mode, reception is enabled by setting either the Single Receive Enable bit (SREN of the RCxSTA register) or the Continuous Receive Enable bit (CREN of the RCxSTA register).

When SREN is set and CREN is clear, only as many clock cycles are generated as there are data bits in a single character. The SREN bit is automatically cleared at the completion of one character. When CREN is set, clocks are continuously generated until CREN is cleared. If CREN is cleared in the middle of a character the CK clock stops immediately and the partial character is discarded. If SREN and CREN are both set, then SREN is cleared at the completion of the first character and CREN takes precedence.

To initiate reception, set either SREN or CREN. Data is sampled at the RX/DT pin on the trailing edge of the TX/CK clock pin and is shifted into the Receive Shift Register (RSR). When a complete character is received into the RSR, the RXxIF bit is set and the character is automatically transferred to the two character receive FIFO. The Least Significant eight bits of the top character in the receive FIFO are available in RCxREG. The RXxIF bit remains set as long as there are unread characters in the receive FIFO.

Note:	If the RX/DT function is on an analog pin, the corresponding ANSEL bit must be cleared for the receiver to function.

34.4.1.6 Slave Clock

Synchronous data transfers use a separate clock line, which is synchronous with the data. A device configured as a slave receives the clock on the TX/CK line. The TX/CK pin output driver is automatically disabled when the device is configured for synchronous slave transmit or receive operation. Serial data bits change on the leading edge to ensure they are valid at the trailing edge of each clock. One data bit is transferred for each clock cycle. Only as many clock cycles should be received as there are data bits.

Note:	If the device is configured as a slave and the TX/CK function is on an analog pin, the corresponding ANSEL bit must be cleared.

34.4.1.7 Receive Overrun Error

The receive FIFO buffer can hold two characters. An overrun error will be generated if a third character, in its entirety, is received before RCxREG is read to access the FIFO. When this happens the OERR bit of the RCxSTA register is set. Previous data in the FIFO will not be overwritten. The two characters in the FIFO buffer can be read, however, no additional characters will be received until the error is cleared. The OERR bit can only be cleared by clearing the overrun condition. If the overrun error occurred when the SREN bit is set and CREN is clear then the error is cleared by reading RCxREG. If the overrun occurred when the CREN bit is set then the error condition is cleared by either clearing the CREN bit of the RCxSTA register or by clearing the SPEN bit which resets the EUSART.

34.4.1.8 Receiving 9-bit Characters

The EUSART supports 9-bit character reception. When the RX9 bit of the RCxSTA register is set the EUSART will shift nine bits into the RSR for each character received. The RX9D bit of the RCxSTA register is the ninth, and Most Significant, data bit of the top unread character in the receive FIFO. When reading 9-bit data from the receive FIFO buffer, the RX9D data bit must be read before reading the eight Least Significant bits from the RCxREG.

34.4.1.9 Synchronous Master Reception Set-up:

1. Initialize the SPxBRGH, SPxBRGL register pair for the appropriate baud rate. Set or clear the BRGH and BRG16 bits, as required, to achieve the desired baud rate.
2. Clear the ANSEL bit for the RX pin (if applicable).
3. Enable the synchronous master serial port by setting bits SYNC, SPEN and CSRC.
4. Ensure bits CREN and SREN are clear.
5. If interrupts are desired, set the RXxIE bit of the PIE3 register and the GIE and PEIE bits of the INTCON register.
6. If 9-bit reception is desired, set bit RX9.
7. Start reception by setting the SREN bit or for continuous reception, set the CREN bit.
8. Interrupt flag bit RXxIF will be set when reception of a character is complete. An interrupt will be generated if the enable bit RXxIE was set.
9. Read the RCxSTA register to get the ninth bit (if enabled) and determine if any error occurred during reception.
10. Read the 8-bit received data by reading the RCxREG register.
11. If an overrun error occurs, clear the error by either clearing the CREN bit of the RCxSTA register or by clearing the SPEN bit which resets the EUSART.

FIGURE 34-12: SYNCHRONOUS RECEPTION (MASTER MODE, SREN)

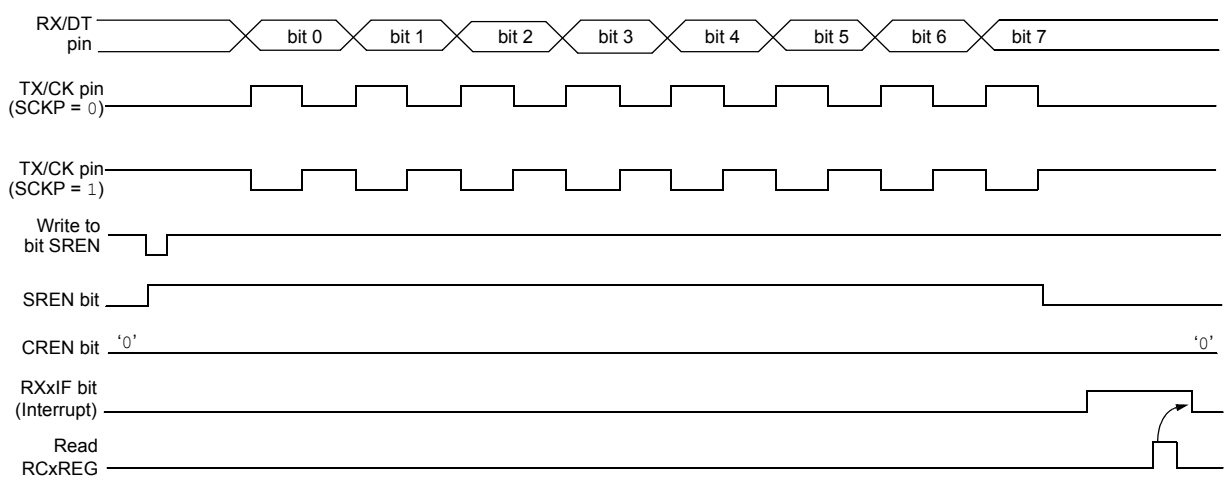

Note: Timing diagram demonstrates Sync Master mode with bit SREN = 1 and bit BRGH = 0.

34.4.2 SYNCHRONOUS SLAVE MODE

The following bits are used to configure the EUSART for synchronous slave operation:

- SYNC = 1
- CSRC = 0
- SREN = 0 (for transmit); SREN = 1 (for receive)
- CREN = 0 (for transmit); CREN = 1 (for receive)
- SPEN = 1

Setting the SYNC bit of the TXxSTA register configures the device for synchronous operation. Clearing the CSRC bit of the TXxSTA register configures the device as a slave. Clearing the SREN and CREN bits of the RCxSTA register ensures that the device is in the Transmit mode, otherwise the device will be configured to receive. Setting the SPEN bit of the RCxSTA register enables the EUSART.

34.4.2.1 EUSART Synchronous Slave Transmit

The operation of the Synchronous Master and Slave modes are identical (see **Section 34.4.1.3 "Synchronous Master Transmission"**), except in the case of the Sleep mode.

If two words are written to the TXxREG and then the SLEEP instruction is executed, the following will occur:

1. The first character will immediately transfer to the TSR register and transmit.
2. The second word will remain in the TXxREG register.
3. The TXxIF bit will not be set.
4. After the first character has been shifted out of TSR, the TXxREG register will transfer the second character to the TSR and the TXxIF bit will now be set.
5. If the PEIE and TXxIE bits are set, the interrupt will wake the device from Sleep and execute the next instruction. If the GIE bit is also set, the program will call the Interrupt Service Routine.

34.4.2.2 Synchronous Slave Transmission Set-up:

1. Set the SYNC and SPEN bits and clear the CSRC bit.
2. Clear the ANSEL bit for the CK pin (if applicable).
3. Clear the CREN and SREN bits.
4. If interrupts are desired, set the TXxIE bit of the PIE3 register and the GIE and PEIE bits of the INTCON register.
5. If 9-bit transmission is desired, set the TX9 bit.
6. Enable transmission by setting the TXEN bit.
7. If 9-bit transmission is selected, insert the Most Significant bit into the TX9D bit.
8. Start transmission by writing the Least Significant eight bits to the TXxREG register.

34.4.2.3 EUSART Synchronous Slave Reception

The operation of the Synchronous Master and Slave modes is identical (**Section 34.4.1.5 "Synchronous Master Reception"**), with the following exceptions:

- Sleep
- CREN bit is always set, therefore the receiver is never idle
- SREN bit, which is a "don't care" in Slave mode

A character may be received while in Sleep mode by setting the CREN bit prior to entering Sleep. Once the word is received, the RSR register will transfer the data to the RCxREG register. If the RXxIE enable bit is set, the interrupt generated will wake the device from Sleep and execute the next instruction. If the GIE bit is also set, the program will branch to the interrupt vector.

34.4.2.4 Synchronous Slave Reception Set-up:

1. Set the SYNC and SPEN bits and clear the CSRC bit.
2. Clear the ANSEL bit for both the CK and DT pins (if applicable).
3. If interrupts are desired, set the RXxIE bit of the PIE3 register and the GIE and PEIE bits of the INTCON register.
4. If 9-bit reception is desired, set the RX9 bit.
5. Set the CREN bit to enable reception.
6. The RXxIF bit will be set when reception is complete. An interrupt will be generated if the RXxIE bit was set.
7. If 9-bit mode is enabled, retrieve the Most Significant bit from the RX9D bit of the RCxSTA register.
8. Retrieve the eight Least Significant bits from the receive FIFO by reading the RCxREG register.
9. If an overrun error occurs, clear the error by either clearing the CREN bit of the RCxSTA register or by clearing the SPEN bit which resets the EUSART.

34.5 EUSART Operation During Sleep

The EUSART will remain active during Sleep only in the Synchronous Slave mode. All other modes require the system clock and therefore cannot generate the necessary signals to run the Transmit or Receive Shift registers during Sleep.

Synchronous Slave mode uses an externally generated clock to run the Transmit and Receive Shift registers.

34.5.1 SYNCHRONOUS RECEIVE DURING SLEEP

To receive during Sleep, all the following conditions must be met before entering Sleep mode:

- RCxSTA and TXxSTA Control registers must be configured for Synchronous Slave Reception (see **Section 34.4.2.4 "Synchronous Slave Reception Set-up:"**).
- If interrupts are desired, set the RXxIE bit of the PIE3 register and the GIE and PEIE bits of the INTCON register.
- The RXxIF interrupt flag must be cleared by reading RCxREG to unload any pending characters in the receive buffer.

Upon entering Sleep mode, the device will be ready to accept data and clocks on the RX/DT and TX/CK pins, respectively. When the data word has been completely clocked in by the external device, the RXxIF interrupt flag bit of the PIR3 register will be set. Thereby, waking the processor from Sleep.

Upon waking from Sleep, the instruction following the `SLEEP` instruction will be executed. If the Global Interrupt Enable (GIE) bit of the INTCON register is also set, then the Interrupt Service Routine at address 004h will be called.

34.5.2 SYNCHRONOUS TRANSMIT DURING SLEEP

To transmit during Sleep, all the following conditions must be met before entering Sleep mode:

- The RCxSTA and TXxSTA Control registers must be configured for synchronous slave transmission (see **Section 34.4.2.2 "Synchronous Slave Transmission Set-up:"**).
- The TXxIF interrupt flag must be cleared by writing the output data to the TXxREG, thereby filling the TSR and transmit buffer.
- If interrupts are desired, set the TXxIE bit of the PIE3 register and the PEIE bit of the INTCON register.
- Interrupt enable bits TXxIE of the PIE3 register and PEIE of the INTCON register must set.

Upon entering Sleep mode, the device will be ready to accept clocks on TX/CK pin and transmit data on the RX/DT pin. When the data word in the TSR has been completely clocked out by the external device, the pending byte in the TXxREG will transfer to the TSR and the TXxIF flag will be set. Thereby, waking the processor from Sleep. At this point, the TXxREG is available to accept another character for transmission, which will clear the TXxIF flag.

Upon waking from Sleep, the instruction following the `SLEEP` instruction will be executed. If the Global Interrupt Enable (GIE) bit is also set then the Interrupt Service Routine at address 0004h will be called.

34.6 Register Definitions: EUSART Control

REGISTER 34-1: TXxSTA: TRANSMIT STATUS AND CONTROL REGISTER

R/W-/0	R/W-0/0	R/W-0/0	R/W-0/0	R/W-0/0	R/W-0/0	R-1/1	R/W-0/0
CSRC	TX9	TXEN(1)	SYNC	SENDB	BRGH	TRMT	TX9D
bit 7							bit 0

Legend:		
R = Readable bit	W = Writable bit	U = Unimplemented bit, read as ‘0’
u = Bit is unchanged	x = Bit is unknown	-n/n = Value at POR and BOR/Value at all other Resets
‘1’ = Bit is set	‘0’ = Bit is cleared	

bit 7 **CSRC:** Clock Source Select bit
Asynchronous mode:
Unused in this mode – value ignored
Synchronous mode:
1 = Master mode (clock generated internally from BRG)
0 = Slave mode (clock from external source)

bit 6 **TX9:** 9-bit Transmit Enable bit
1 = Selects 9-bit transmission
0 = Selects 8-bit transmission

bit 5 **TXEN:** Transmit Enable bit(1)
1 = Transmit enabled
0 = Transmit disabled

bit 4 **SYNC:** EUSART Mode Select bit
1 = Synchronous mode
0 = Asynchronous mode

bit 3 **SENDB:** Send Break Character bit
Asynchronous mode:
1 = Send SYNCH BREAK on next transmission – Start bit, followed by 12 ‘0’ bits, followed by Stop bit; cleared by hardware upon completion
0 = SYNCH BREAK transmission disabled or completed
Synchronous mode:
Unused in this mode – value ignored

bit 2 **BRGH:** High Baud Rate Select bit
Asynchronous mode:
1 = High speed
0 = Low speed
Synchronous mode:
Unused in this mode – value ignored

bit 1 **TRMT:** Transmit Shift Register Status bit
1 = TSR empty
0 = TSR full

bit 0 **TX9D:** Ninth bit of Transmit Data
Can be address/data bit or a parity bit.

Note 1: SREN/CREN overrides TXEN in Sync mode.

REGISTER 34-2: RCxSTA: RECEIVE STATUS AND CONTROL REGISTER

R/W-0/0	R/W-0/0	R/W-0/0	R/W-0/0	R/W-0/0	R-0/0	R-0/0	R-0/0
SPEN(1)	RX9	SREN	CREN	ADDEN	FERR	OERR	RX9D
bit 7							bit 0

Legend:		
R = Readable bit	W = Writable bit	U = Unimplemented bit, read as ‘0’
u = Bit is unchanged	x = Bit is unknown	-n/n = Value at POR and BOR/Value at all other Resets
‘1’ = Bit is set	‘0’ = Bit is cleared	

bit 7 **SPEN:** Serial Port Enable bit(1)
1 = Serial port enabled
0 = Serial port disabled (held in Reset)

bit 6 **RX9:** 9-Bit Receive Enable bit
1 = Selects 9-bit reception
0 = Selects 8-bit reception

bit 5 **SREN:** Single Receive Enable bit
Asynchronous mode:
Unused in this mode – value ignored
Synchronous mode – Master:
1 = Enables single receive
0 = Disables single receive
This bit is cleared after reception is complete.
Synchronous mode – Slave
Unused in this mode – value ignored

bit 4 **CREN:** Continuous Receive Enable bit
Asynchronous mode:
1 = Enables continuous receive until enable bit CREN is cleared
0 = Disables continuous receive
Synchronous mode:
1 = Enables continuous receive until enable bit CREN is cleared (CREN overrides SREN)
0 = Disables continuous receive

bit 3 **ADDEN:** Address Detect Enable bit
Asynchronous mode 9-bit (RX9 = 1):
1 = Enables address detection – enable interrupt and load of the receive buffer when the ninth bit in the receive buffer is set
0 = Disables address detection, all bytes are received and ninth bit can be used as parity bit
Asynchronous mode 8-bit (RX9 = 0):
Unused in this mode – value ignored

bit 2 **FERR:** Framing Error bit
1 = Framing error (can be updated by reading RCxREG register and receive next valid byte)
0 = No framing error

bit 1 **OERR:** Overrun Error bit
1 = Overrun error (can be cleared by clearing bit CREN)
0 = No overrun error

bit 0 **RX9D:** Ninth bit of Received Data
This can be address/data bit or a parity bit and must be calculated by user firmware.

Note 1: The EUSART module automatically changes the pin from tri-state to drive as needed. Configure the associated TRIS bits for TX/CK and RX/DT to 1.

REGISTER 34-3: BAUDxCON: BAUD RATE CONTROL REGISTER

R/W-0/0	R-1/1	U-0	R/W-0/0	R/W-0/0	U-0	R/W-0/0	R/W-0/0
ABDOVF	RCIDL	—	SCKP	BRG16	—	WUE	ABDEN
bit 7							bit 0

Legend:		
R = Readable bit	W = Writable bit	U = Unimplemented bit, read as ‘0’
u = Bit is unchanged	x = Bit is unknown	-n/n = Value at POR and BOR/Value at all other Resets
‘1’ = Bit is set	‘0’ = Bit is cleared	

bit 7 **ABDOVF:** Auto-Baud Detect Overflow bit
Asynchronous mode:
1 = Auto-baud timer overflowed
0 = Auto-baud timer did not overflow
Synchronous mode:
Don’t care

bit 6 **RCIDL:** Receive Idle Flag bit
Asynchronous mode:
1 = Receiver is Idle
0 = Start bit has been received and the receiver is receiving
Synchronous mode:
Don’t care

bit 5 **Unimplemented:** Read as ‘0’

bit 4 **SCKP:** Clock/Transmit Polarity Select bit
Asynchronous mode:
1 = Idle state for transmit (TX) is a low level
0 = Idle state for transmit (TX) is a high level
Synchronous mode:
1 = Idle state for clock (CK) is a high level
0 = Idle state for clock (CK) is a low level

bit 3 **BRG16:** 16-bit Baud Rate Generator bit
1 = 16-bit Baud Rate Generator is used
0 = 8-bit Baud Rate Generator is used

bit 2 **Unimplemented:** Read as ‘0’

bit 1 **WUE:** Wake-up Enable bit
Asynchronous mode:
1 = USART will continue to sample the Rx pin – interrupt generated on falling edge; bit cleared in hardware on following rising edge.
0 = RX pin not monitored nor rising edge detected
Synchronous mode:
Unused in this mode – value ignored

bit 0 **ABDEN:** Auto-Baud Detect Enable bit
Asynchronous mode:
1 = Enable baud rate measurement on the next character – requires reception of a SYNCH field (55h);
cleared in hardware upon completion
0 = Baud rate measurement disabled or completed
Synchronous mode:
Unused in this mode – value ignored

REGISTER 34-4: RCxREG(1): RECEIVE DATA REGISTER

R-0	R-0	R-0	R-0	R-0	R-0	R-0	R-0
RCxREG<7:0>							
bit 7							bit 0

Legend:		
R = Readable bit	W = Writable bit	U = Unimplemented bit, read as ‘0’
u = Bit is unchanged	x = Bit is unknown	-n/n = Value at POR and BOR/Value at all other Resets
‘1’ = Bit is set	‘0’ = Bit is cleared	

bit 7-0 **RCxREG<7:0>:** Lower eight bits of the received data; read-only; see also RX9D (Register 34-2)

Note 1: RCxREG (including the 9th bit) is double buffered, and data is available while new data is being received.

REGISTER 34-5: TXxREG(1): TRANSMIT DATA REGISTER

R/W-0	R/W-0	R/W-0	R/W-0	R/W-0	R/W-0	R/W-0	R/W-0
TXxREG<7:0>							
bit 7							bit 0

Legend:		
R = Readable bit	W = Writable bit	U = Unimplemented bit, read as ‘0’
u = Bit is unchanged	x = Bit is unknown	-n/n = Value at POR and BOR/Value at all other Resets
‘1’ = Bit is set	‘0’ = Bit is cleared	

bit 7-0 **TXxREG<7:0>:** Lower eight bits of the received data; read-only; see also RX9D (Register 34-1)

Note 1: TXxREG (including the 9th bit) is double buffered, and can be written when previous data has started shifting.

REGISTER 34-6: SPxBRGL(1): BAUD RATE GENERATOR REGISTER

R/W-0	R/W-0	R/W-0	R/W-0	R/W-0	R/W-0	R/W-0	R/W-0
SPxBRG<7:0>							
bit 7							bit 0

Legend:		
R = Readable bit	W = Writable bit	U = Unimplemented bit, read as ‘0’
u = Bit is unchanged	x = Bit is unknown	-n/n = Value at POR and BOR/Value at all other Resets
‘1’ = Bit is set	‘0’ = Bit is cleared	

bit 7-0 **SPxBRG<7:0>:** Lower eight bits of the Baud Rate Generator

Note 1: Writing to SP1BRG resets the BRG counter.

REGISTER 34-7: SPxBRGH(1, 2): BAUD RATE GENERATOR HIGH REGISTER

R/W-0	R/W-0	R/W-0	R/W-0	R/W-0	R/W-0	R/W-0	R/W-0
SPxBRG<15:8>							
bit 7							bit 0

Legend:		
R = Readable bit	W = Writable bit	U = Unimplemented bit, read as ‘0’
u = Bit is unchanged	x = Bit is unknown	-n/n = Value at POR and BOR/Value at all other Resets
‘1’ = Bit is set	‘0’ = Bit is cleared	

bit 7 **SPxBRG<15:8>:** Upper eight bits of the Baud Rate Generator

Note 1: SPxBRGH value is ignored for all modes unless BAUDxCON<BRG16> is active.

2: Writing to SPxBRGH resets the BRG counter.

TABLE 34-2: SUMMARY OF REGISTERS ASSOCIATED WITH EUSART

Name	Bit 7	Bit 6	Bit 5	Bit 4	Bit 3	Bit 2	Bit 1	Bit 0	Register on Page
INTCON	GIE	PEIE	—	—	—	—	—	INTEDG	164
PIR3	RC2IF	TX2IF	RC1IF	TX1IF	—	—	BCL1IF	SSP1IF	177
PIE3	RC2IE	TX2IE	RC1IE	TX1IE	—	—	BCL1IE	SSP1IE	168
RCxSTA	SPEN	RX9	SREN	CREN	ADDEN	FERR	OERR	RX9D	584
TXxSTA	CSRC	TX9	TXEN	SYNC	SENDB	BRGH	TRMT	TX9D	583
BAUDxCON	ABDOVF	RCIDL	—	SCKP	BRG16	—	WUE	ABDEN	585
RCxREG	RCxREG<7:0>								586*
TXxREG	TXxREG<7:0>								586*
SPxBRGL	SPxBRG<7:0>								586*
SPxBRGH	SPxBRG<15:8>								587*
RXPPS	—	—	—	RXPPS<4:0>					264
CKPPS	—	—	—	CXPPS<4:0>					264
RxyPPS	—	—	—	RxyPPS<4:0>					265
CLCxSELy	—	—	—	LCxDyS<4:0>					504

Legend: — = unimplemented location, read as '0'. Shaded cells are not used for the EUSART module.
* Page with register information.

TABLE 34-3: BAUD RATE FORMULAS

Configuration Bits			BRG/EUSART Mode	Baud Rate Formula
SYNC	BRG16	BRGH		
0	0	0	8-bit/Asynchronous	FOSC/[64 (n+1)]
0	0	1	8-bit/Asynchronous	FOSC/[16 (n+1)]
0	1	0	16-bit/Asynchronous	
0	1	1	16-bit/Asynchronous	FOSC/[4 (n+1)]
1	0	x	8-bit/Synchronous	
1	1	x	16-bit/Synchronous	

Legend: x = Don't care, n = value of SPxBRGH, SPxBRGL register pair.

TABLE 34-4: BAUD RATE FOR ASYNCHRONOUS MODES

BAUD RATE	SYNC = 0, BRGH = 0, BRG16 = 0											
	FOSC = 32.000 MHz			FOSC = 20.000 MHz			FOSC = 18.432 MHz			FOSC = 11.0592 MHz		
	Actual Rate	% Error	SPBRG value (decimal)	Actual Rate	% Error	SPBRG value (decimal)	Actual Rate	% Error	SPBRG value (decimal)	Actual Rate	% Error	SPBRG value (decimal)
300	—	—	—	—	—	—	—	—	—	—	—	—
1200	—	—	—	1221	1.73	255	1200	0.00	239	1200	0.00	143
2400	2404	0.16	207	2404	0.16	129	2400	0.00	119	2400	0.00	71
9600	9615	0.16	51	9470	-1.36	32	9600	0.00	29	9600	0.00	17
10417	10417	0.00	47	10417	0.00	29	10286	-1.26	27	10165	-2.42	16
19.2k	19.23k	0.16	25	19.53k	1.73	15	19.20k	0.00	14	19.20k	0.00	8
57.6k	55.55k	-3.55	3	—	—	—	57.60k	0.00	7	57.60k	0.00	2
115.2k	—	—	—	—	—	—	—	—	—	—	—	—

BAUD RATE	SYNC = 0, BRGH = 0, BRG16 = 0											
	FOSC = 8.000 MHz			FOSC = 4.000 MHz			FOSC = 3.6864 MHz			FOSC = 1.000 MHz		
	Actual Rate	% Error	SPBRG value (decimal)	Actual Rate	% Error	SPBRG value (decimal)	Actual Rate	% Error	SPBRG value (decimal)	Actual Rate	% Error	SPBRG value (decimal)
300	—	—	—	300	0.16	207	300	0.00	191	300	0.16	51
1200	1202	0.16	103	1202	0.16	51	1200	0.00	47	1202	0.16	12
2400	2404	0.16	51	2404	0.16	25	2400	0.00	23	—	—	—
9600	9615	0.16	12	—	—	—	9600	0.00	5	—	—	—
10417	10417	0.00	11	10417	0.00	5	—	—	—	—	—	—
19.2k	—	—	—	—	—	—	19.20k	0.00	2	—	—	—
57.6k	—	—	—	—	—	—	57.60k	0.00	0	—	—	—
115.2k	—	—	—	—	—	—	—	—	—	—	—	—

TABLE 34-4: BAUD RATE FOR ASYNCHRONOUS MODES (CONTINUED)

BAUD RATE	SYNC = 0, BRGH = 1, BRG16 = 0											
	FOSC = 32.000 MHz			FOSC = 20.000 MHz			FOSC = 18.432 MHz			FOSC = 11.0592 MHz		
	Actual Rate	% Error	SPBRG value (decimal)	Actual Rate	% Error	SPBRG value (decimal)	Actual Rate	% Error	SPBRG value (decimal)	Actual Rate	% Error	SPBRG value (decimal)
300	—	—	—	—	—	—	—	—	—	—	—	—
1200	—	—	—	—	—	—	—	—	—	—	—	—
2400	—	—	—	—	—	—	—	—	—	—	—	—
9600	9615	0.16	207	9615	0.16	129	9600	0.00	119	9600	0.00	71
10417	10417	0.00	191	10417	0.00	119	10378	-0.37	110	10473	0.53	65
19.2k	19.23k	0.16	103	19.23k	0.16	64	19.20k	0.00	59	19.20k	0.00	35
57.6k	57.14k	-0.79	34	56.82k	-1.36	21	57.60k	0.00	19	57.60k	0.00	11
115.2k	117.64k	2.12	16	113.64k	-1.36	10	115.2k	0.00	9	115.2k	0.00	5

BAUD RATE	SYNC = 0, BRGH = 1, BRG16 = 0											
	FOSC = 8.000 MHz			FOSC = 4.000 MHz			FOSC = 3.6864 MHz			FOSC = 1.000 MHz		
	Actual Rate	% Error	SPBRG value (decimal)	Actual Rate	% Error	SPBRG value (decimal)	Actual Rate	% Error	SPBRG value (decimal)	Actual Rate	% Error	SPBRG value (decimal)
300	—	—	—	—	—	—	—	—	—	300	0.16	207
1200	—	—	—	1202	0.16	207	1200	0.00	191	1202	0.16	51
2400	2404	0.16	207	2404	0.16	103	2400	0.00	95	2404	0.16	25
9600	9615	0.16	51	9615	0.16	25	9600	0.00	23	—	—	—
10417	10417	0.00	47	10417	0.00	23	10473	0.53	21	10417	0.00	5
19.2k	19231	0.16	25	19.23k	0.16	12	19.2k	0.00	11	—	—	—
57.6k	55556	-3.55	8	—	—	—	57.60k	0.00	3	—	—	—
115.2k	—	—	—	—	—	—	115.2k	0.00	1	—	—	—

BAUD RATE	SYNC = 0, BRGH = 0, BRG16 = 1											
	FOSC = 32.000 MHz			FOSC = 20.000 MHz			FOSC = 18.432 MHz			FOSC = 11.0592 MHz		
	Actual Rate	% Error	SPBRG value (decimal)	Actual Rate	% Error	SPBRG value (decimal)	Actual Rate	% Error	SPBRG value (decimal)	Actual Rate	% Error	SPBRG value (decimal)
300	300.0	0.00	6666	300.0	-0.01	4166	300.0	0.00	3839	300.0	0.00	2303
1200	1200	-0.02	3332	1200	-0.03	1041	1200	0.00	959	1200	0.00	575
2400	2401	-0.04	832	2399	-0.03	520	2400	0.00	479	2400	0.00	287
9600	9615	0.16	207	9615	0.16	129	9600	0.00	119	9600	0.00	71
10417	10417	0.00	191	10417	0.00	119	10378	-0.37	110	10473	0.53	65
19.2k	19.23k	0.16	103	19.23k	0.16	64	19.20k	0.00	59	19.20k	0.00	35
57.6k	57.14k	-0.79	34	56.818	-1.36	21	57.60k	0.00	19	57.60k	0.00	11
115.2k	117.6k	2.12	16	113.636	-1.36	10	115.2k	0.00	9	115.2k	0.00	5

TABLE 34-4: BAUD RATE FOR ASYNCHRONOUS MODES (CONTINUED)

BAUD RATE	SYNC = 0, BRGH = 0, BRG16 = 1											
	Fosc = 8.000 MHz			Fosc = 4.000 MHz			Fosc = 3.6864 MHz			Fosc = 1.000 MHz		
	Actual Rate	% Error	SPBRG value (decimal)	Actual Rate	% Error	SPBRG value (decimal)	Actual Rate	% Error	SPBRG value (decimal)	Actual Rate	% Error	SPBRG value (decimal)
300	299.9	-0.02	1666	300.1	0.04	832	300.0	0.00	767	300.5	0.16	207
1200	1199	-0.08	416	1202	0.16	207	1200	0.00	191	1202	0.16	51
2400	2404	0.16	207	2404	0.16	103	2400	0.00	95	2404	0.16	25
9600	9615	0.16	51	9615	0.16	25	9600	0.00	23	—	—	—
10417	10417	0.00	47	10417	0.00	23	10473	0.53	21	10417	0.00	5
19.2k	19.23k	0.16	25	19.23k	0.16	12	19.20k	0.00	11	—	—	—
57.6k	55556	-3.55	8	—	—	—	57.60k	0.00	3	—	—	—
115.2k	—	—	—	—	—	—	115.2k	0.00	1	—	—	—

BAUD RATE	SYNC = 0, BRGH = 1, BRG16 = 1 or SYNC = 1, BRG16 = 1											
	Fosc = 32.000 MHz			Fosc = 20.000 MHz			Fosc = 18.432 MHz			Fosc = 11.0592 MHz		
	Actual Rate	% Error	SPBRG value (decimal)	Actual Rate	% Error	SPBRG value (decimal)	Actual Rate	% Error	SPBRG value (decimal)	Actual Rate	% Error	SPBRG value (decimal)
300	300.0	0.00	26666	300.0	0.00	16665	300.0	0.00	15359	300.0	0.00	9215
1200	1200	0.00	6666	1200	-0.01	4166	1200	0.00	3839	1200	0.00	2303
2400	2400	0.01	3332	2400	0.02	2082	2400	0.00	1919	2400	0.00	1151
9600	9604	0.04	832	9597	-0.03	520	9600	0.00	479	9600	0.00	287
10417	10417	0.00	767	10417	0.00	479	10425	0.08	441	10433	0.16	264
19.2k	19.18k	-0.08	416	19.23k	0.16	259	19.20k	0.00	239	19.20k	0.00	143
57.6k	57.55k	-0.08	138	57.47k	-0.22	86	57.60k	0.00	79	57.60k	0.00	47
115.2k	115.9k	0.64	68	116.3k	0.94	42	115.2k	0.00	39	115.2k	0.00	23

BAUD RATE	SYNC = 0, BRGH = 1, BRG16 = 1 or SYNC = 1, BRG16 = 1											
	Fosc = 8.000 MHz			Fosc = 4.000 MHz			Fosc = 3.6864 MHz			Fosc = 1.000 MHz		
	Actual Rate	% Error	SPBRG value (decimal)	Actual Rate	% Error	SPBRG value (decimal)	Actual Rate	% Error	SPBRG value (decimal)	Actual Rate	% Error	SPBRG value (decimal)
300	300.0	0.00	6666	300.0	0.01	3332	300.0	0.00	3071	300.1	0.04	832
1200	1200	-0.02	1666	1200	0.04	832	1200	0.00	767	1202	0.16	207
2400	2401	0.04	832	2398	0.08	416	2400	0.00	383	2404	0.16	103
9600	9615	0.16	207	9615	0.16	103	9600	0.00	95	9615	0.16	25
10417	10417	0	191	10417	0.00	95	10473	0.53	87	10417	0.00	23
19.2k	19.23k	0.16	103	19.23k	0.16	51	19.20k	0.00	47	19.23k	0.16	12
57.6k	57.14k	-0.79	34	58.82k	2.12	16	57.60k	0.00	15	—	—	—
115.2k	117.6k	2.12	16	111.1k	-3.55	8	115.2k	0.00	7	—	—	—

35.0 LIQUID CRYSTAL DISPLAY (LCD) CONTROLLER

The Liquid Crystal Display (LCD) driver module generates the timing control to drive a static or multiplexed LCD panel. The module is capable of driving panels with up to eight commons and up to 38 segments pins. It also provides control of the LCD pixel data.

The LCD driver module supports:

- Direct driving of LCD panel
- Two LCD clock sources with selectable prescaler
- Up to eight commons: See Table 35-1 for device specific multiplexing options.
  - Static (One common)
  - 1/2 Multiplex (two commons)
  - 1/3 Multiplex (three commons)
  - 1/4 Multiplex (four commons)
  - 1/5 Multiplex (five commons)
  - 1/6 Multiplex (six commons)
  - 1/7 Multiplex (seven commons)
  - 1/8 Multiplex (eight commons)
- Static, 1/2 (1/2 Multiplex only) or 1/3 LCD bias (1/3 Multiplex and higher)
- On-chip bias generator with dedicated charge pump to support a range of fixed and variable bias options
- Internal resistors for bias voltage generation
- Software contrast control through internal biasing

A simplified block diagram of the module is shown in Figure 35-1.

TABLE 35-1: MULTIPLEXING OPTIONS

Device Pin Count	Number of COM Used	Number of SEG Pins Available	Number of Possible Segments
28-Pin	1	19	19
	2	18	36
	3	17	51
	4	16	64
	5	15	75
	6	14	84
	7	13	91
	8	12	96
40-Pin, 44-Pin	1	30	30
	2	29	58
	3	28	84
	4	27	108
	5	26	130
	6	25	150
	7	24	168
	8	23	184
48-Pin	1	38	38
	2	37	74
	3	36	108
	4	35	140
	5	34	170
	6	33	198
	7	32	198
	8	31	248

© 2017-2019 Microchip Technology Inc.

FIGURE 35-1: LCD CONTROLLER MODULE BLOCK DIAGRAM

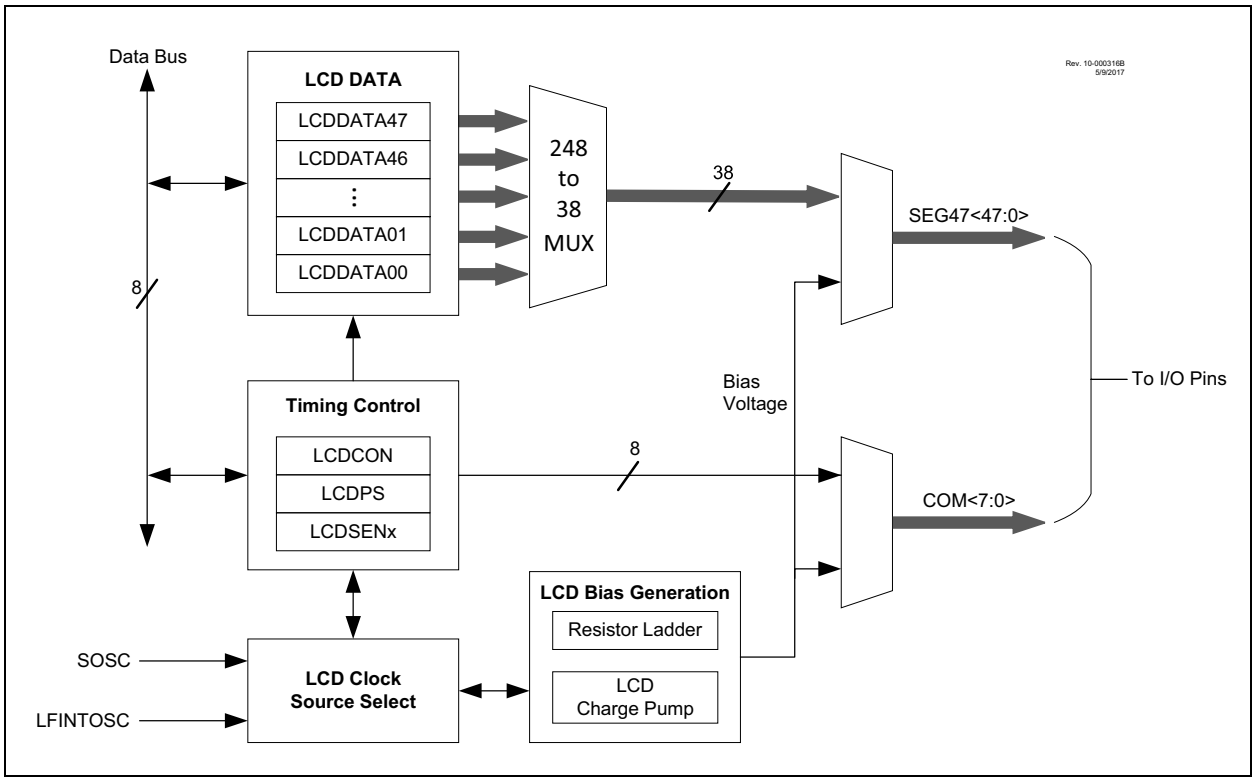

35.1 LCD Registers

The LCD controller is made up of the following registers:

- LCD Control Register (LCDCON)
- LCD Phase Register (LCDPS)
- Two LCD Voltage Control Registers (LCDVCON1 and LCDVCON2)
- LCD Internal Reference Ladder Control Register (LCDRL)
- LCD Reference Voltage/Contrast Control Register (LCDCST)
- Six LCD Segment Enable Registers (LCDSE5:LCDSE0)
- 48 LCD Data Registers (LCDDATA47:LCDDA-TA0)

The LCDCON register, shown in Register 35-1, controls the overall operation of the module. Once the module is configured, the LCDEN (LCDCON<7>) bit is used to enable or disable the LCD module. The LCD panel will Sleep with the device when the SLPEN (LCDCON<6>) bit is set and a `SLEEP` instruction is executed. The panel will remain enabled and continue driving the LCD during Sleep, when the SLPEN bit is cleared.

The LCDPS register, shown in Register 35-2, configures the LCD clock source prescaler and the waveform type: Type-A or Type-B. For more details about these features, see **Section 35.3 "LCD Clock Source Selection"** and **Section 35.12 "LCD Waveform Generation"**.

35.2 LCD Segment Pins Configuration

The LCDSEx registers are used to configure the PORT pin functions. Setting the segment enable bit for a particular segment configures that pin as an LCD driver and overrides all PPS options along with all other non-LCD pin functions. Table 35-2 shows the six LCD Segment Enable registers, and the generic LCDSEx register is shown in Register 35-3.

Once the module has been initialized for the LCD panel, the individual bits of the LCDDATAx registers can be cleared or set to represent a clear or dark pixel, depending upon on whether the display produces a positive or negative image.

Specific subsets of LCDDATAx registers are used with specific segments and common signal combinations. Each bit represents a unique combination of a specific segment associated with a specific common.

Individual bits of the LCDDATAx registers are named by the convention, "SxxCy", with "xx" representing the segment number and "y" as the common number.

Table 35-3, Table 35-4, and Table 35-5 summarize the LCDDATAx registers for the different devices within this family.

TABLE 35-2: LCDSEx REGISTERS AND ASSOCIATED SEGMENTS

Register	Segments
LCDSE0	SEG 7:SEG 0
LCDSE1	SEG 15:SEG 8
LCDSE2	SEG 23:SEG 16
LCDSE3	SEG 31:SEG 24
LCDSE4	SEG 39:SEG 32
LCDSE5	SEG 47:SEG40

.

TABLE 35-3: LCDDATAX REGISTERS AND BITS FOR SEGMENT AND COM COMBINATIONS (28-PIN)

Register	Bit 7	Bit 6	Bit 5	Bit 4	Bit 3	Bit 2	Bit 1	Bit 0
LCDDATA0	SEG7 COM0	SEG6 COM0	—	SEG4 COM0	SEG3 COM0	SEG2 COM0	SEG1 COM0	SEG0 COM0
LCDDATA1	SEG15 COM0	SEG14 COM0	SEG13 COM0	—	SEG11 COM0	SEG10 COM0	SEG9 COM0	SEG8 COM0
LCDDATA2	SEG23 COM0	SEG22 COM0	—	SEG20 COM0	SEG19 COM0	SEG18 COM0	—	—
LCDDATA3	—	—	—	—	—	—	—	—
LCDDATA4	—	—	—	—	—	—	—	—
LCDDATA5	—	—	—	—	—	—	—	—
LCDDATA6	SEG7 COM1	SEG6 COM1	—	SEG4 COM1	SEG3 COM1	SEG2 COM1	SEG1 COM1	SEG0 COM1
LCDDATA7	SEG15 COM1	SEG14 COM1	SEG13 COM1	—	SEG11 COM1	SEG10 COM1	SEG9 COM1	SEG8 COM1
LCDDATA8	SEG23 COM1	SEG22 COM1	—	SEG20 COM1	SEG19 COM1	SEG18 COM1	—	—
LCDDATA9	—	—	—	—	—	—	—	—
LCDDATA10	—	—	—	—	—	—	—	—
LCDDATA11	—	—	—	—	—	—	—	—
LCDDATA12	SEG7 COM2	SEG6 COM2	—	SEG4 COM2	SEG3 COM2	SEG2 COM2	SEG1 COM2	SEG0 COM2
LCDDATA13	SEG15 COM2	SEG14 COM2	SEG13 COM2	—	SEG11 COM2	SEG10 COM2	SEG9 COM2	SEG8 COM2
LCDDATA14	SEG23 COM2	SEG22 COM2	—	SEG20 COM2	SEG19 COM2	SEG18 COM2	—	—
LCDDATA15	—	—	—	—	—	—	—	—
LCDDATA16	—	—	—	—	—	—	—	—
LCDDATA17	—	—	—	—	—	—	—	—
LCDDATA18	SEG7 COM3	SEG6 COM3	—	SEG4 COM3	SEG3 COM3	SEG2 COM3	SEG1 COM3	SEG0 COM3
LCDDATA19	SEG15 COM3	SEG14 COM3	SEG13 COM3	—	SEG11 COM3	SEG10 COM3	SEG9 COM3	SEG8 COM3
LCDDATA20	SEG23 COM3	SEG22 COM3	—	SEG20 COM3	SEG19 COM3	SEG18 COM3	—	—
LCDDATA21	—	—	—	—	—	—	—	—
LCDDATA22	—	—	—	—	—	—	—	—
LCDDATA23	—	—	—	—	—	—	—	—
LCDDATA24	SEG7 COM4	SEG6 COM4	—	SEG4 COM4	SEG3 COM4	SEG2 COM4	SEG1 COM4	SEG0 COM4
LCDDATA25	SEG15 COM4	SEG14 COM4	SEG13 COM4	—	SEG11 COM4	SEG10 COM4	SEG9 COM4	SEG8 COM4
LCDDATA26	SEG23 COM4	SEG22 COM4	—	SEG20 COM4	SEG19 COM4	SEG18 COM4	—	—
LCDDATA27	—	—	—	—	—	—	—	—
LCDDATA28	—	—	—	—	—	—	—	—
LCDDATA29	—	—	—	—	—	—	—	—
LCDDATA30	SEG7 COM5	SEG6 COM5	—	SEG4 COM5	SEG3 COM5	SEG2 COM5	SEG1 COM5	SEG0 COM5
LCDDATA31	SEG15 COM5	SEG14 COM5	SEG13 COM5	—	SEG11 COM5	SEG10 COM5	SEG9 COM5	SEG8 COM5
LCDDATA32	SEG23 COM5	SEG22 COM5	—	SEG20 COM5	SEG19 COM5	SEG18 COM5	—	—
LCDDATA33	—	—	—	—	—	—	—	—
LCDDATA34	—	—	—	—	—	—	—	—
LCDDATA35	—	—	—	—	—	—	—	—
LCDDATA36	SEG7 COM6	SEG6 COM6	—	SEG4 COM6	SEG3 COM6	SEG2 COM6	SEG1 COM6	SEG0 COM6
LCDDATA37	SEG15 COM6	SEG14 COM6	SEG13 COM6	—	SEG11 COM6	SEG10 COM6	SEG9 COM6	SEG8 COM6
LCDDATA38	SEG23 COM6	SEG22 COM6	—	SEG20 COM6	SEG19 COM6	SEG18 COM6	—	—
LCDDATA39	—	—	—	—	—	—	—	—
LCDDATA40	—	—	—	—	—	—	—	—
LCDDATA41	—	—	—	—	—	—	—	—
LCDDATA42	SEG7 COM7	SEG6 COM7	—	SEG4 COM7	SEG3 COM7	SEG2 COM7	SEG1 COM7	SEG0 COM7
LCDDATA43	SEG15 COM7	SEG14 COM7	SEG13 COM7	—	SEG11 COM7	SEG10 COM7	SEG9 COM7	SEG8 COM7
LCDDATA44	SEG23 COM7	SEG22 COM7	—	SEG20 COM7	SEG19 COM7	SEG18 COM7	—	—
LCDDATA45	—	—	—	—	—	—	—	—
LCDDATA46	—	—	—	—	—	—	—	—
LCDDATA47	—	—	—	—	—	—	—	—

TABLE 35-4: LCDDATAX REGISTERS AND BITS FOR SEGMENT AND COM COMBINATIONS (40/44-PIN)

Register	Bit 7	Bit 6	Bit 5	Bit 4	Bit 3	Bit 2	Bit 1	Bit 0
LCDDATA0	SEG7 COM0	SEG6 COM0	—	SEG4 COM0	SEG3 COM0	SEG2 COM0	SEG1 COM0	SEG0 COM0
LCDDATA1	SEG15 COM0	SEG14 COM0	SEG13 COM0	—	SEG11 COM0	SEG10 COM0	SEG9 COM0	SEG8 COM0
LCDDATA2	SEG23 COM0	SEG22 COM0	—	SEG20 COM0	SEG19 COM0	SEG18 COM0	—	—
LCDDATA3	SEG31 COM0	SEG30 COM0	SEG29 COM0	SEG28 COM0	SEG27 COM0	SEG26 COM0	SEG25 COM0	SEG24 COM0
LCDDATA4	—	—	—	—	—	SEG34 COM0	SEG33 COM0	SEG32 COM0
LCDDATA5	—	—	—	—	—	—	—	—
LCDDATA6	SEG7 COM1	SEG6 COM1	—	SEG4 COM1	SEG3 COM1	SEG2 COM1	SEG1 COM1	SEG0 COM1
LCDDATA7	SEG15 COM1	SEG14 COM1	SEG13 COM1	—	SEG11 COM1	SEG10 COM1	SEG9 COM1	SEG8 COM1
LCDDATA8	SEG23 COM1	SEG22 COM1	—	SEG20 COM1	SEG19 COM1	SEG18 COM1	—	—
LCDDATA9	SEG31 COM1	SEG30 COM1	SEG29 COM1	SEG28 COM1	SEG27 COM1	SEG26 COM1	SEG25 COM1	SEG24 COM1
LCDDATA10	—	—	—	—	—	SEG34 COM1	SEG33 COM1	SEG32 COM1
LCDDATA11	—	—	—	—	—	—	—	—
LCDDATA12	SEG7 COM2	SEG6 COM2	—	SEG4 COM2	SEG3 COM2	SEG2 COM2	SEG1 COM2	SEG0 COM2
LCDDATA13	SEG15 COM2	SEG14 COM2	SEG13 COM2	—	SEG11 COM2	SEG10 COM2	SEG9 COM2	SEG8 COM2
LCDDATA14	SEG23 COM2	SEG22 COM2	—	SEG20 COM2	SEG19 COM2	SEG18 COM2	—	—
LCDDATA15	SEG31 COM2	SEG30 COM2	SEG29 COM2	SEG28 COM2	SEG27 COM2	SEG26 COM2	SEG25 COM2	SEG24 COM2
LCDDATA16	—	—	—	—	—	SEG34 COM2	SEG33 COM2	SEG32 COM2
LCDDATA17	—	—	—	—	—	—	—	—
LCDDATA18	SEG7 COM3	SEG6 COM3	—	SEG4 COM3	SEG3 COM3	SEG2 COM3	SEG1 COM3	SEG0 COM3
LCDDATA19	SEG15 COM3	SEG14 COM3	SEG13 COM3	—	SEG11 COM3	SEG10 COM3	SEG9 COM3	SEG8 COM3
LCDDATA20	SEG23 COM3	SEG22 COM3	—	SEG20 COM3	SEG19 COM3	SEG18 COM3	—	—
LCDDATA21	SEG31 COM3	SEG30 COM3	SEG29 COM3	SEG28 COM3	SEG27 COM3	SEG26 COM3	SEG25 COM3	SEG24 COM3
LCDDATA22	—	—	—	—	—	SEG34 COM3	SEG33 COM3	SEG32 COM3
LCDDATA23	—	—	—	—	—	—	—	—
LCDDATA24	SEG7 COM4	SEG6 COM4	—	SEG4 COM4	SEG3 COM4	SEG2 COM4	SEG1 COM4	SEG0 COM4
LCDDATA25	SEG15 COM4	SEG14 COM4	SEG13 COM4	—	SEG11 COM4	SEG10 COM4	SEG9 COM4	SEG8 COM4
LCDDATA26	SEG23 COM4	SEG22 COM4	—	SEG20 COM4	SEG19 COM4	SEG18 COM4	—	—
LCDDATA27	SEG31 COM4	SEG30 COM4	SEG29 COM4	SEG28 COM4	SEG27 COM4	SEG26 COM4	SEG25 COM4	SEG24 COM4
LCDDATA28	—	—	—	—	—	SEG34 COM4	SEG33 COM4	SEG32 COM4
LCDDATA29	—	—	—	—	—	—	—	—
LCDDATA30	SEG7 COM5	SEG6 COM5	—	SEG4 COM5	SEG3 COM5	SEG2 COM5	SEG1 COM5	SEG0 COM5
LCDDATA31	SEG15 COM5	SEG14 COM5	SEG13 COM5	—	SEG11 COM5	SEG10 COM5	SEG9 COM5	SEG8 COM5
LCDDATA32	SEG23 COM5	SEG22 COM5	—	SEG20 COM5	SEG19 COM5	SEG18 COM5	—	—
LCDDATA33	SEG31 COM5	SEG30 COM5	SEG29 COM5	SEG28 COM5	SEG27 COM5	SEG26 COM5	SEG25 COM5	SEG24 COM5
LCDDATA34	—	—	—	—	—	SEG34 COM5	SEG33 COM5	SEG32 COM5
LCDDATA35	—	—	—	—	—	—	—	—
LCDDATA36	SEG7 COM6	SEG6 COM6	—	SEG4 COM6	SEG3 COM6	SEG2 COM6	SEG1 COM6	SEG0 COM6
LCDDATA37	SEG15 COM6	SEG14 COM6	SEG13 COM6	—	SEG11 COM6	SEG10 COM6	SEG9 COM6	SEG8 COM6
LCDDATA38	SEG23 COM6	SEG22 COM6	—	SEG20 COM6	SEG19 COM6	SEG18 COM6	—	—
LCDDATA39	SEG31 COM6	SEG30 COM6	SEG29 COM6	SEG28 COM6	SEG27 COM6	SEG26 COM6	SEG25 COM6	SEG24 COM6
LCDDATA40	—	—	—	—	—	SEG34 COM6	SEG33 COM6	SEG32 COM6
LCDDATA41	—	—	—	—	—	—	—	—
LCDDATA42	SEG7 COM7	SEG6 COM7	—	SEG4 COM7	SEG3 COM7	SEG2 COM7	SEG1 COM7	SEG0 COM7
LCDDATA43	SEG15 COM7	SEG14 COM7	SEG13 COM7	—	SEG11 COM7	SEG10 COM7	SEG9 COM7	SEG8 COM7
LCDDATA44	SEG23 COM7	SEG22 COM7	—	SEG20 COM7	SEG19 COM7	SEG18 COM7	—	—
LCDDATA45	SEG31 COM7	SEG30 COM7	SEG29 COM7	SEG28 COM7	SEG27 COM7	SEG26 COM7	SEG25 COM7	SEG24 COM7
LCDDATA46	—	—	—	—	—	SEG34 COM7	SEG33 COM7	SEG32 COM7
LCDDATA47	—	—	—	—	—	—	—	—

TABLE 35-5: LCDDATAX REGISTERS AND BITS FOR SEGMENT AND COM COMBINATIONS (48-PIN)

Register	Bit 7	Bit 6	Bit 5	Bit 4	Bit 3	Bit 2	Bit 1	Bit 0
LCDDATA0	SEG7 COM0	SEG6 COM0	—	SEG4 COM0	SEG3 COM0	SEG2 COM0	SEG1 COM0	SEG0 COM0
LCDDATA1	SEG15 COM0	SEG14 COM0	SEG13 COM0	—	SEG11 COM0	SEG10 COM0	SEG9 COM0	SEG8 COM0
LCDDATA2	SEG23 COM0	SEG22 COM0	—	SEG20 COM0	SEG19 COM0	SEG18 COM0	—	—
LCDDATA3	SEG31 COM0	SEG30 COM0	SEG29 COM0	SEG28 COM0	SEG27 COM0	SEG26 COM0	SEG25 COM0	SEG24 COM0
LCDDATA4	—	—	—	—	—	SEG34 COM0	SEG33 COM0	SEG32 COM0
LCDDATA5	SEG47 COM0	SEG46 COM0	SEG45 COM0	SEG44 COM0	SEG43 COM0	SEG42 COM0	SEG41 COM0	SEG40 COM0
LCDDATA6	SEG7 COM1	SEG6 COM1	—	SEG4 COM1	SEG3 COM1	SEG2 COM1	SEG1 COM1	SEG0 COM1
LCDDATA7	SEG15 COM1	SEG14 COM1	SEG13 COM1	—	SEG11 COM1	SEG10 COM1	SEG9 COM1	SEG8 COM1
LCDDATA8	SEG23 COM1	SEG22 COM1	—	SEG20 COM1	SEG19 COM1	SEG18 COM1	—	—
LCDDATA9	SEG31 COM1	SEG30 COM1	SEG29 COM1	SEG28 COM1	SEG27 COM1	SEG26 COM1	SEG25 COM1	SEG24 COM1
LCDDATA10	—	—	—	—	—	SEG34 COM1	SEG33 COM1	SEG32 COM1
LCDDATA11	SEG47 COM1	SEG46 COM1	SEG45 COM1	SEG44 COM1	SEG43 COM1	SEG42 COM1	SEG41 COM1	SEG40 COM1
LCDDATA12	SEG7 COM2	SEG6 COM2	—	SEG4 COM2	SEG3 COM2	SEG2 COM2	SEG1 COM2	SEG0 COM2
LCDDATA13	SEG15 COM2	SEG14 COM2	SEG13 COM2	—	SEG11 COM2	SEG10 COM2	SEG9 COM2	SEG8 COM2
LCDDATA14	SEG23 COM2	SEG22 COM2	—	SEG20 COM2	SEG19 COM2	SEG18 COM2	—	—
LCDDATA15	SEG31 COM2	SEG30 COM2	SEG29 COM2	SEG28 COM2	SEG27 COM2	SEG26 COM2	SEG25 COM2	SEG24 COM2
LCDDATA16	—	—	—	—	—	SEG34 COM2	SEG33 COM2	SEG32 COM2
LCDDATA17	SEG47 COM2	SEG46 COM2	SEG45 COM2	SEG44 COM2	SEG43 COM2	SEG42 COM2	SEG41 COM2	SEG40 COM2
LCDDATA18	SEG7 COM3	SEG6 COM3	—	SEG4 COM3	SEG3 COM3	SEG2 COM3	SEG1 COM3	SEG0 COM3
LCDDATA19	SEG15 COM3	SEG14 COM3	SEG13 COM3	—	SEG11 COM3	SEG10 COM3	SEG9 COM3	SEG8 COM3
LCDDATA20	SEG23 COM3	SEG22 COM3	—	SEG20 COM3	SEG19 COM3	SEG18 COM3	—	—
LCDDATA21	SEG31 COM3	SEG30 COM3	SEG29 COM3	SEG28 COM3	SEG27 COM3	SEG26 COM3	SEG25 COM3	SEG24 COM3
LCDDATA22	—	—	—	—	—	SEG34 COM3	SEG33 COM3	SEG32 COM3
LCDDATA23	SEG47 COM3	SEG46 COM3	SEG45 COM3	SEG44 COM3	SEG43 COM3	SEG42 COM3	SEG41 COM3	SEG40 COM3
LCDDATA24	SEG7 COM4	SEG6 COM4	—	SEG4 COM4	SEG3 COM4	SEG2 COM4	SEG1 COM4	SEG0 COM4
LCDDATA25	SEG15 COM4	SEG14 COM4	SEG13 COM4	—	SEG11 COM4	SEG10 COM4	SEG9 COM4	SEG8 COM4
LCDDATA26	SEG23 COM4	SEG22 COM4	—	SEG20 COM4	SEG19 COM4	SEG18 COM4	—	—
LCDDATA27	SEG31 COM4	SEG30 COM4	SEG29 COM4	SEG28 COM4	SEG27 COM4	SEG26 COM4	SEG25 COM4	SEG24 COM4
LCDDATA28	—	—	—	—	—	SEG34 COM4	SEG33 COM4	SEG32 COM4
LCDDATA29	SEG47 COM4	SEG46 COM4	SEG45 COM4	SEG44 COM4	SEG43 COM4	SEG42 COM4	SEG41 COM4	SEG40 COM4
LCDDATA30	SEG7 COM5	SEG6 COM5	—	SEG4 COM5	SEG3 COM5	SEG2 COM5	SEG1 COM5	SEG0 COM5
LCDDATA31	SEG15 COM5	SEG14 COM5	SEG13 COM5	—	SEG11 COM5	SEG10 COM5	SEG9 COM5	SEG8 COM5
LCDDATA32	SEG23 COM5	SEG22 COM5	—	SEG20 COM5	SEG19 COM5	SEG18 COM5	—	—
LCDDATA33	SEG31 COM5	SEG30 COM5	SEG29 COM5	SEG28 COM5	SEG27 COM5	SEG26 COM5	SEG25 COM5	SEG24 COM5
LCDDATA34	—	—	—	—	—	SEG34 COM5	SEG33 COM5	SEG32 COM5
LCDDATA35	SEG47 COM5	SEG46 COM5	SEG45 COM5	SEG44 COM5	SEG43 COM5	SEG42 COM5	SEG41 COM5	SEG40 COM5
LCDDATA36	SEG7 COM6	SEG6 COM6	—	SEG4 COM6	SEG3 COM6	SEG2 COM6	SEG1 COM6	SEG0 COM6
LCDDATA37	SEG15 COM6	SEG14 COM6	SEG13 COM6	—	SEG11 COM6	SEG10 COM6	SEG9 COM6	SEG8 COM6
LCDDATA38	SEG23 COM6	SEG22 COM6	—	SEG20 COM6	SEG19 COM6	SEG18 COM6	—	—
LCDDATA39	SEG31 COM6	SEG30 COM6	SEG29 COM6	SEG28 COM6	SEG27 COM6	SEG26 COM6	SEG25 COM6	SEG24 COM6
LCDDATA40	—	—	—	—	—	SEG34 COM6	SEG33 COM6	SEG32 COM6
LCDDATA41	SEG47 COM6	SEG46 COM6	SEG45 COM6	SEG44 COM6	SEG43 COM6	SEG42 COM6	SEG41 COM6	SEG40 COM6
LCDDATA42	SEG7 COM7	SEG6 COM7	—	SEG4 COM7	SEG3 COM7	SEG2 COM7	SEG1 COM7	SEG0 COM7
LCDDATA43	SEG15 COM7	SEG14 COM7	SEG13 COM7	—	SEG11 COM7	SEG10 COM7	SEG9 COM7	SEG8 COM7
LCDDATA44	SEG23 COM7	SEG22 COM7	—	SEG20 COM7	SEG19 COM7	SEG18 COM7	—	—
LCDDATA45	SEG31 COM7	SEG30 COM7	SEG29 COM7	SEG28 COM7	SEG27 COM7	SEG26 COM7	SEG25 COM7	SEG24 COM7
LCDDATA46	—	—	—	—	—	SEG34 COM7	SEG33 COM7	SEG32 COM7
LCDDATA47	SEG47 COM7	SEG46 COM7	SEG45 COM7	SEG44 COM7	SEG43 COM7	SEG42 COM7	SEG41 COM7	SEG40 COM7

© 2017-2019 Microchip Technology Inc.

35.3 LCD Clock Source Selection

The LCD driver module has two clock sources:

- Secondary Oscillator (SOSC)
- Low-Frequency Internal Oscillator (LFINTOSC)

The SOSC will supply 1 kHz to the LCD module when a 32.768 kHz crystal is used. The LFINTOSC clock source is a 31.25 kHz internal oscillator that provides approximately 1 kHz to the LCD module. These clock sources may be used to continue running the LCD while the processor is in Sleep. The clock sources are selected through the CS bit (LCDCON4).

35.3.1 LCD PRESCALER

A 4-bit prescaler is provided for the LCD clock. The prescaler counter is not directly readable or writable. The prescaler value is set by configuring the LP<3:0> bits (LCDPS<3:0>).

Selectable prescaler values range from 1:1 through 1:16 in increments of one. Table 35-2 shows a simplified diagram of the LCD clock generation block.

FIGURE 35-2: LCD CLOCK GENERATION

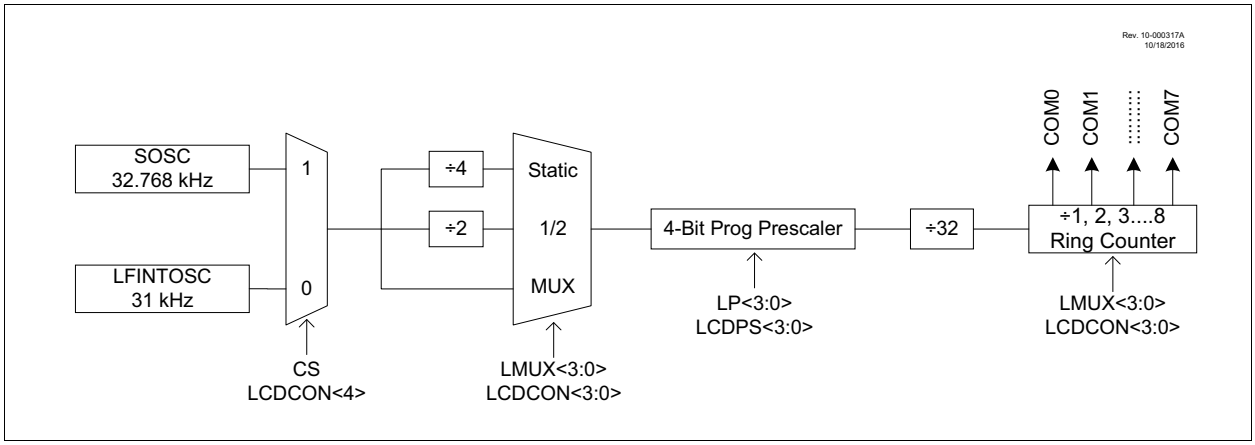

35.4 LCD Bias Types

The LCD module will operate in one of three different bias types depending upon the number of commons on the display:

- Static bias (two voltage levels: VSS and VDD or Boost Pump Voltage)
- 1/2 bias (three voltage levels: VSS, 1/2 VDD or Boost Pump Voltage and VDD or Boost Pump Voltage)
- 1/3 bias (four voltage levels: VSS, 1/3 VDD or Boost Pump Voltage, 2/3 VDD or Boost Pump Voltage and VDD or Boost Pump Voltage)

LCD bias voltages can be generated with internal resistor ladders, internal bias generator or external resistor ladder.

35.5 Resistor Biasing

The LCD module is capable of generating bias voltages using the built-in internal resistor ladder. Rather than adding additional external circuitry to derive bias voltages, the internal resistor ladders are available and can be configured to generate the bias voltages needed. Table 35-6 shows the total resistance values for each of the resistor ladders.

Driving a display using the internal resistor ladder is recommended if the resistance specifications meet the drive requirements of the LCD panel being used, otherwise a specifically calculated external resistor ladder may need to be used to meet the drive requirements of the display.

35.5.1 INTERNAL RESISTOR BIASING

The internal resistor ladder network consists of three separate ladders. Disabling the internal reference ladder disconnects all three of the ladders, allowing external and internal boost pump voltages to be supplied.

Depending on the total resistance from the resistor ladders, the biasing can be classified as low, medium or high power.

Table 35-6 shows the total resistance of each of the internal resistor ladders. Figure 35-4 shows the internal resister ladder connections. When the internal resistor ladder is selected, the bias voltage can either be derived from VDD, the LCD charge pump, the 3x FVR or externally supplied, depending on the LCDVSRC setting.

This LCD module includes an LCD reference voltage and contrast control ladder that is tuned to the nominal resistance of the reference ladder. This reference ladder can be used to provide software contrast control by configuring the LCDCST<2:0> bits of the LCDREF register.

TABLE 35-6: INTERNAL RESISTANCE LADDER POWER MODES

Power Mode	Nominal Resistance of Entire Ladder	IDD
Low	3.3 MΩ	1 µA
Medium	300 kΩ	10 µA
High	30 kΩ	100 µA

35.5.2 AUTOMATIC POWER MODE SWITCHING

Each segment within an LCD display can be perceived electrically like a small capacitor. Due to this fact, power is mainly consumed during the transition periods when voltage is being supplied to the segments. In order to manage total current consumption, the LCD reference ladder can be used in different power modes during these transition periods. Control of the LCD reference ladder is done through the LCDRL register (see Register 35-7).

Automatic power switching using Type-A/Type-B waveforms, can optimize the power consumption for a given contrast level.

As shown in Figure 35-3, Power Mode A is active for a programmable amount of time, beginning when the LCD segment waveform is transitioning. The LRLAT<2:0> bits (LCDRL<2:0>) determine how long Mode A is active. Power Mode B is active for the remaining time before the segments or commons change again.

As shown in Figure 35-3, there are 32 counts in a single segment time. Type-A is used when the wave form is in transition. Type-B can be used when the segment voltage is stable or not in transition.

FIGURE 35-3: LCD REFERENCE LADDER POWER MODE SWITCHING DIAGRAM

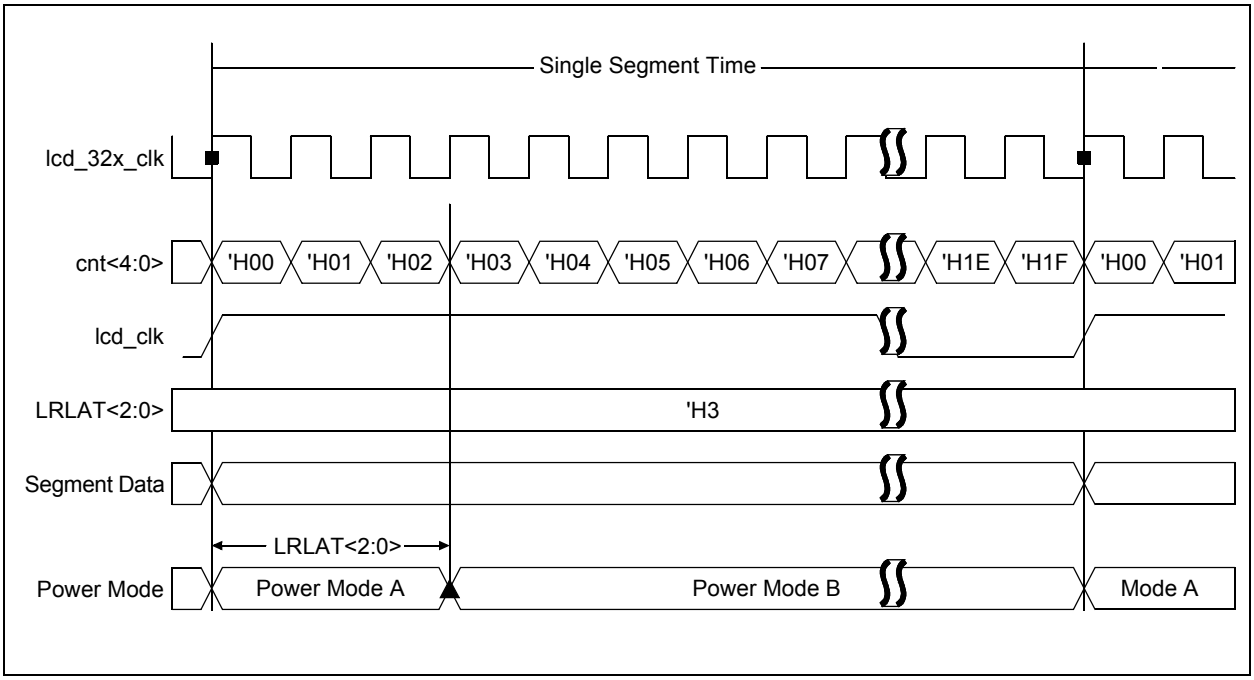

35.5.3 CONTRAST CONTROL

The LCD contrast control circuit consists of a 7-tap resistor ladder, controlled by the LCDCSTx bits of the LCDREF register (see Figure 35-4).

FIGURE 35-4: INTERNAL REFERENCE AND CONTRAST CONTROL BLOCK DIAGRAM

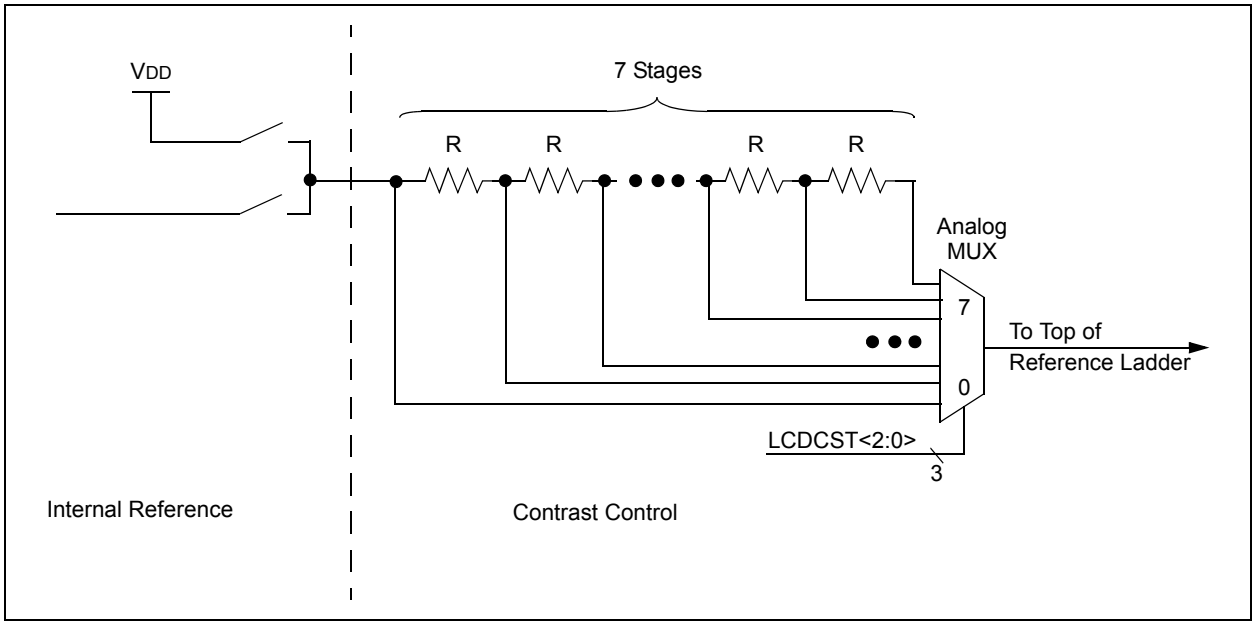

35.6 Bias Generation

35.6.1 INTERNAL REFERENCE

An internal reference for the LCD bias voltage can be enabled under firmware control. When enabled, the source of this voltage can be VDD, the LCD charge pump or 3x FVR.

When no internal reference is selected, the LCD contrast control circuit is disabled and LCD bias must be provided externally. Whenever the LCD module is inactive (LCDA = 0), the internal reference will be turned off.

35.6.2 VLCDx PINS AND EXTERNAL BIAS

The VLCD3, VLCD2 and VLCD1 pins provide the ability for an external LCD bias network to be used instead of the internal ladder. Use of the VLCDx pins does not prevent use of the internal ladder.

35.6.3 LCD BIAS GENERATION

The LCD driver module is capable of generating the required bias voltages for LCD operation with a minimum of external components. This includes the ability to generate the different voltage levels required by the different bias types that are required by the LCD. The driver module can also provide bias voltages, both above and below microcontroller VDD, through the use of an on-chip LCD charge pump.

35.6.4 LCD CHARGE PUMP

The purpose of the LCD charge pump is to provide proper bias voltage and good contrast for the LCD, regardless of VDD levels. This LCD module contains a charge pump and internal voltage reference. The charge pump can be configured by using external components to boost bias voltage above VDD. It can also operate a display at a constant voltage below VDD. The charge pump can also be selectively disabled to allow bias voltages to be generated by an external resistor network.

The LCD charge pump is controlled through the LCDVCONx registers.

35.6.5 VLCD3 MONITORING

The ADC can be used to measure the VLCD3 voltage via a VLCD3 divided by 4 channel on the ADC. This feature is useful when active adjustment of the LCDCST<2:0> or BIAS<2:0> bits need to be made to account of contrast changes due to extreme temperatures and/or a high number of large active pixels. See **Section 19.0 “Analog-to-Digital Converter with Computation (ADC2) Module”** for additional details.

35.7 BIAS CONFIGURATIONS

PIC16(L)F19155/56/75/76/85/86 devices have eight distinct circuit configurations for LCD bias generation:

- LCD voltage supplied from External Resistor Ladder
- LCD voltage supplied from Charge Pump + Internal Resistor Ladder
- LCD voltage supplied from Charge Pump + External Resistor Ladder
- LCD voltage supplied from Charge Pump Only (no Resistor ladder)
- LCD voltage supplied from Internal Resistor Ladder + External Capacitors + VDD for VLCD3
- LCD voltage supplied from Internal Resistor Ladder + External Capacitors + External VLCD3
- LCD voltage supplied from Internal Resistor Ladder + FVR for VLCD3
- LCD voltage supplied from Internal Resistor Ladder + VDD for VLCD3
- LCD voltage supplied from Internal Resistor Ladder + External VLCD3

35.7.1 LCD BIAS TYPES

PIC16(L)F19155/56/75/76/85/86 family devices support three bias types, based on the waveforms generated to control segments and commons:

- Static (two discrete levels)
- 1/2 Bias (three discrete levels)
- 1/3 Bias (four discrete levels)

The use of different waveforms in driving the LCD is discussed in more detail in **Section 35.12 "LCD Waveform Generation"**.

35.7.2 LCD CHARGE PUMP

When the LCD charge pump feature is enabled, it allows the regulator to generate voltages up to 3.5V in 3V mode, and up to 5V in 5V mode (as measured at VLCD3).

The LCD charge pump uses a flyback capacitor connected between CFLY1 and CFLY2, as well as output hold and storage capacitors on VLCD1 through VLCD3, to obtain the required voltage boost (Figure 35-5). The output voltage (VBIAS) is the difference of the potential between VLCD3 and GND. It is set by the BIAS<2:0> bits which adjust the offset between VLCD3 and VSS. The flyback capacitor (CFLY) acts as a charge storage element for large LCD loads.

This mode is useful in those cases where the voltage requirements of the LCD are higher than the microcontroller's VDD and conversely. The integrated LCD charge pump also makes this LCD module ideal for battery powered LCD applications to help ensure that the contrast of the display does not degrade as the batteries discharge over time. Charge pump also permits software control of the display's contrast, by adjustment of bias voltage, by changing the value of the BIAS bits.

TABLE 35-7: LCD MODES WITH INTERNAL CHARGE PUMP

Supported LCD Modes					
Resistor Mode	**Bias Mode**	**Charge Pump Mode**			
		3V	**3V Low Current**	**5V**	**5V Low Current**
Internal	Static	Supported	Supported	Supported	Supported
	1/2	Supported	Supported	Supported	Supported
	1/3	Supported	Supported	Supported	Supported
No Resistor	Static	Supported	Supported	Supported	Supported
	1/2	Not Supported(1)	Supported	Not Supported(1)	Not Supported(1)
	1/3	Supported	Not Supported(1)	Not Supported(1)	Supported

Note 1: The mode is not supported as the required voltages on VLCDx pins driving the VLCDx voltages does not coincide with what is required for the charge pump to operate.

FIGURE 35-5: LCD REGULATOR CONNECTIONS FOR LCD VOLTAGE SUPPLIED FROM CHARGE PUMP WITH AND WITHOUT INTERNAL RESISTOR LADDER

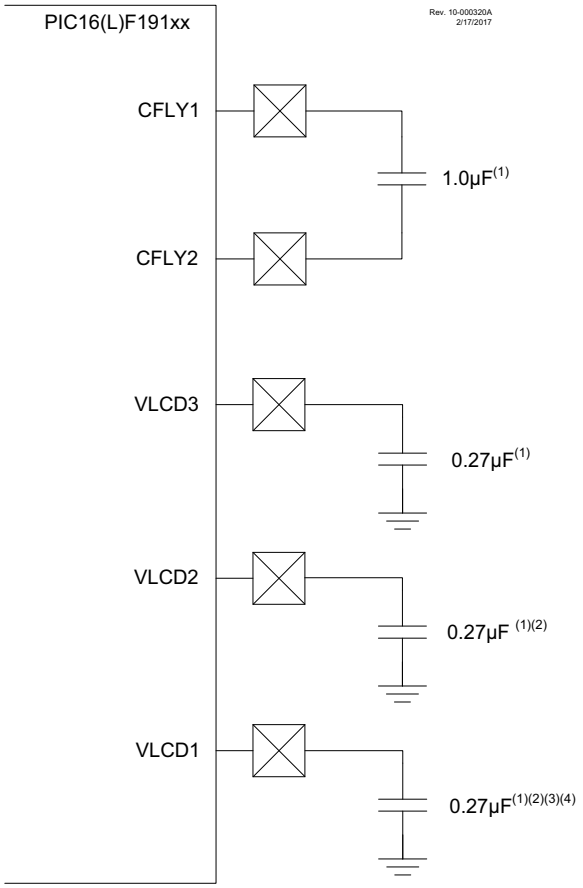

Note 1: These values are provided for design guidance only; they should be optimized for the application by the designer.

2: When EN5V = 0 and LPEN = 1, this pin can be used as a GPIO and the external capacitor is not required.

3: When EN5V = 1 and LPEN = 1, this pin can be used as a GPIO and the external capacitor is not required.

4: When EN5V = 0 and LPEN = 0, this pin can be used as a GPIO and the external capacitor is not required.

35.7.3 LCD VOLTAGE SUPPLIED FROM EXTERNAL RESISTOR LADDER

In this mode, the LCD charge pump is completely disabled. The LCD bias levels are tied to VDD and are generated using an external divider. The difference is that the internal voltage reference is also disabled and the bottom of the ladder is tied to ground (VSS); see Figure 35-6. The value of the resistors, and the difference between VSS and VDD, determine the contrast range; no software adjustment is possible. This configuration is also used in instances where the current requirements of the LCD panel exceed the capacity of the charge pump and the high power (HP) internal resistor ladder.

Depending on the bias type required, resistors are connected between some or all of the pins. A potentiometer can also be connected between VLCD3 and VDD to allow for hardware controlled contrast adjustment.

FIGURE 35-6: CONNECTIONS FOR LCD VOLTAGE SUPPLIED FROM EXTERNAL LADDER, STATIC, 1/2 AND 1/3 BIAS MODES (LCDVSRC<3:0> = 1000)

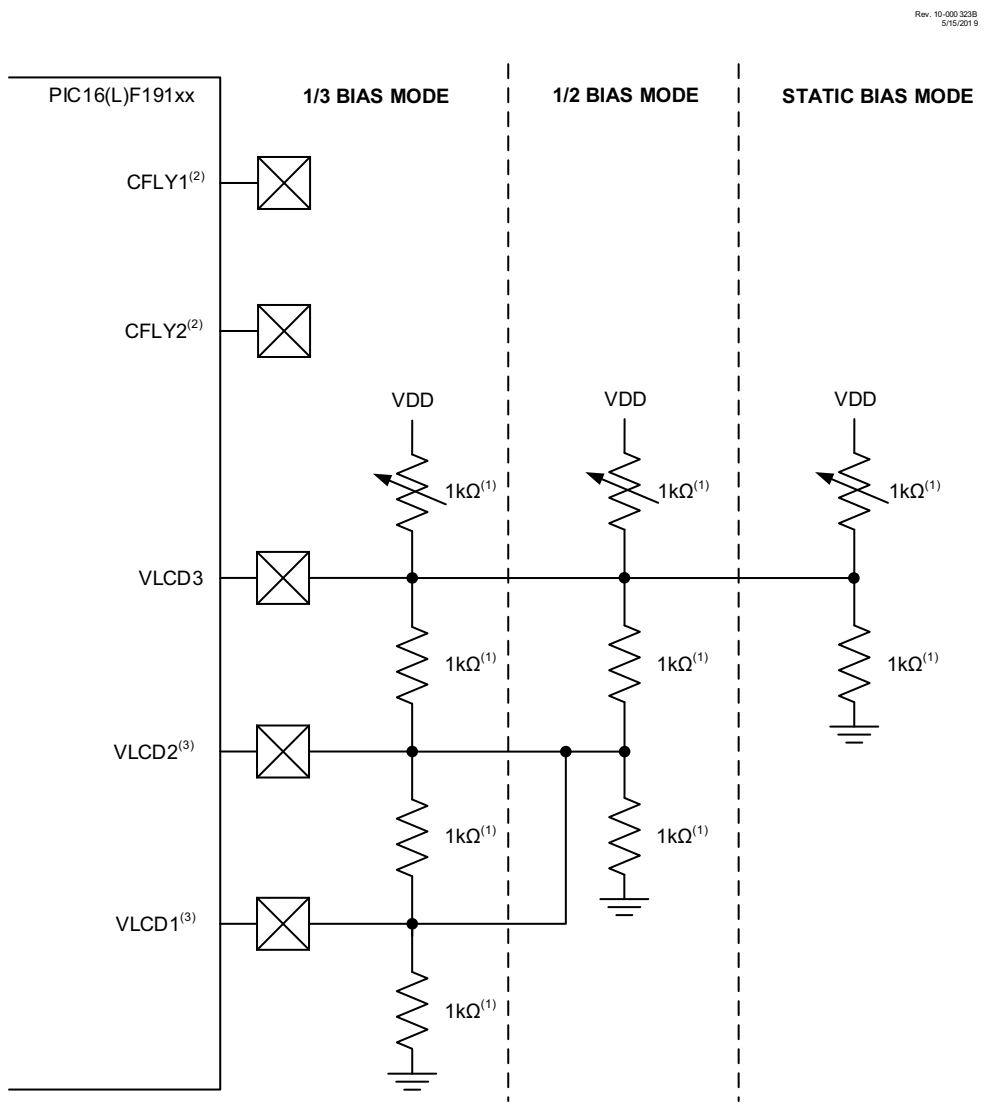

Note 1: These values are provided for design guidance only; they should be optimized for the application by the designer.

2: It can be used as GPIO.

3: In 1/2 Bias mode, this pin can be used a GPIO.

4: In Static mode, this pin can be used a GPIO.

35.7.4 35.6.4 INTERNAL RESISTOR LADDER WITH EXTERNAL CAPACITORS

In this configuration, the user can use the internal resistor ladders to generate the LCD bias levels, and use external capacitors to guard again burst currents. It is recommend the user utilize external capacitors when driving large glass panels with large pixels and a high pixel count. The external capacitors will help dampen current spikes during segment switching. Contrast is adjusted using the LCDCST<2:0> bits. The CFLYx pins are available as GPIO, since the charge pump is not being used in this configuration. See Figure 35-7 for supported connections.

External capacitors can be used when voltage to the internal resistor ladder is supplied by VDD (LCDVSRC<3:0> = `0101`) or an external source (LCDVSRC<3:0> = `0100`). When supplying an external voltage to the internal resistor ladder, the external capacitors should be limited to VLCD2, and VLCD3.

FIGURE 35-7: CONNECTIONS FOR LCD VOLTAGE SUPPLIED EXTERNALLY OR FROM VDD ALONG WITH INTERNAL RESISTOR LADDER AND EXTERNAL CAPACITORS, STATIC, 1/2 AND 1/3 BIAS MODES (LCDVSRC<3:0> = 0100, 0101)

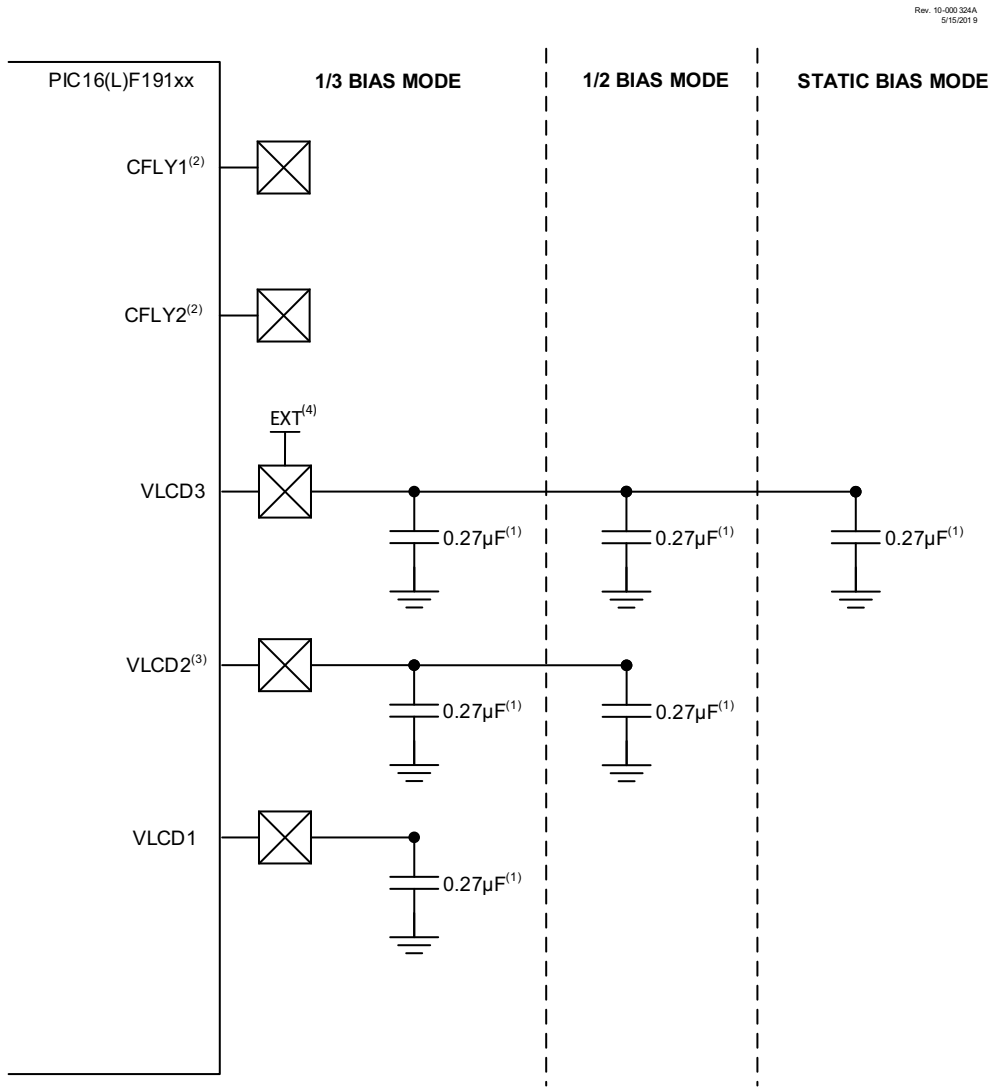

Note 1: These values are provided for design guidance only; they should be optimized for the application by the designer.

2: It can be used as GPIO.

3: In Static mode, this pin can be used a GPIO.

4: LCDVSRC<3:0> = 0100.

35.7.5 INTERNAL RESISTOR

When driving a small LCD load such as an LCD with a small pixel count and small pixels, the user can use the internal resistor ladder to generate the LCD bias levels. The top of the internal ladder can be supplied by the FVR, VDD and externally. See Register 35-6 for additional details.

35.8 LCD Multiplex Types

The LCD driver module can be configured into eight multiplex types:

- Static (only COM0 used)
- 1/2 multiplex (COM0 and COM1 are used)
- 1/3 multiplex (COM0, COM1 and COM2 are used)
- 1/4 multiplex (COM0, COM1, COM2 and COM3 are used)
- 1/5 multiplex (COM0, COM1, COM2, COM3 and COM4 are used)
- 1/6 multiplex (COM0, COM1, COM2, COM3, COM4 and COM5 are used)
- 1/7 multiplex (COM0, COM1, COM2, COM3, COM4, COM5 and COM6 are used)
- 1/8 multiplex (COM0, COM1, COM2, COM3, COM4, COM5, COM6 and COM7 are used)

The LMUX<3:0> setting (LCDCON<3:0>) determines the function of the COM pins. (For details, see Table 35-8). If the pin is a digital I/O, the corresponding TRIS bit controls the data direction. If the pin is a COM drive, the TRIS setting of that pin is overridden.

Note: On a Power-on Reset, the LMUX<3:0> bits are '0000'.

TABLE 35-8: COM<7:0> PIN FUNCTIONS

LMUX<3:0>	COM7 Pin	COM6 Pin	COM5 Pin	COM4 Pin	COM3 Pin	COM2 Pin	COM1 Pin	COM0 Pin
1000	COM7	COM6	COM5	COM4	COM3	COM2	COM1	COM0
0111	I/O Pin	COM6	COM5	COM4	COM3	COM2	COM1	COM0
0110	I/O Pin	I/O Pin	COM5	COM4	COM3	COM2	COM1	COM0
0101	I/O Pin	I/O Pin	I/O Pin	COM4	COM3	COM2	COM1	COM0
0100	I/O Pin	I/O Pin	I/O Pin	I/O Pin	COM3	COM2	COM1	COM0
0011	I/O Pin	I/O Pin	I/O Pin	I/O Pin	I/O Pin	COM2	COM1	COM0
0010	I/O Pin	I/O Pin	I/O Pin	I/O Pin	I/O Pin	I/O Pin	COM1	COM0
0001	I/O Pin	I/O Pin	I/O Pin	I/O Pin	I/O Pin	I/O Pin	I/O Pin	COM0
0000	I/O Pin	I/O Pin	I/O Pin	I/O Pin	I/O Pin	I/O Pin	I/O Pin	I/O Pin

35.9 Segment Enables

The LCDSENx registers are used to select the pin function for each segment pin. The selection allows the designated SEG pins to be configured as LCD segment driver pins. To configure the pin as a segment pin, the corresponding bits in the LCDSENx registers must be set to '1'.

If the pin is a digital I/O, the corresponding TRIS bit controls the data direction. Any bit set in the LCDSENx registers overrides any bit settings in the corresponding TRIS register.

Note: On a Power-on Reset, these pins are configured as digital I/O.

35.10 Pixel Control

The LCDDATAx registers contain bits that define the state of each pixel. Each bit defines one unique pixel. Table 35-2 shows the correlation of each bit in the LCDDATAx registers to the respective common and segment signals.

35.11 LCD Frame Frequency

The rate at which the COM and SEG outputs change is called the LCD frame frequency. Table 35-9 shows the frame frequency calculations while operating within the different multiplex modes.

TABLE 35-9: FRAME FREQUENCY FORMULAS

Multiplex	Frame Frequency =
Static ('0001')	Clock Source/(4 x 1 x (LP<3:0> + 1))
1/2 ('0010')	Clock Source/(2 x 2 x (LP<3:0> + 1))
1/3 ('0011')	Clock Source/(1 x 3 x (LP<3:0> + 1))
1/4 ('0100')	Clock Source/(1 x 4 x (LP<3:0> + 1))
1/5 ('0101')	Clock Source/(1 x 5 x (LP<3:0> + 1))
1/6 ('0110')	Clock Source/(1 x 6 x (LP<3:0> + 1))
1/7 ('0111')	Clock Source/(1 x 7 x (LP<3:0> + 1))
1/8 ('1000')	Clock Source/(1 x 8 x (LP<3:0> + 1))

Note: The clock source is SOSC/32 or LFINTOSC/32.

35.12 LCD Waveform Generation

LCD waveform generation is based on the theory that the net AC voltage across the dark pixel should be maximized and the net AC voltage across the clear pixel should be minimized. The net DC voltage across any pixel should be zero.

The COM signal represents the time slice for each common, while the SEG contains the pixel data.

The pixel signal (COM-SEG) will have no DC component and can take only one of the two rms values. The higher rms value will create a dark pixel and a lower rms value will create a clear pixel.

As the number of commons increases, the delta between the two rms values decreases. The delta represents the maximum contrast that the display can have.

The LCDs can be driven by two types of waveforms: Type-A and Type-B. In a Type-A waveform, the phase changes within each common type, whereas a Type-B waveform's phase changes on each frame boundary. Thus, Type-A waveforms maintain 0 VDC over a single frame, whereas Type-B waveforms take two frames.

Figure 35-8 through Figure 35-15 provide waveforms for static, half-multiplex, one-third multiplex and quarter multiplex drives for Type-A and Type-B waveforms.

FIGURE 35-8: TYPE-A/TYPE-B WAVEFORMS IN STATIC DRIVE

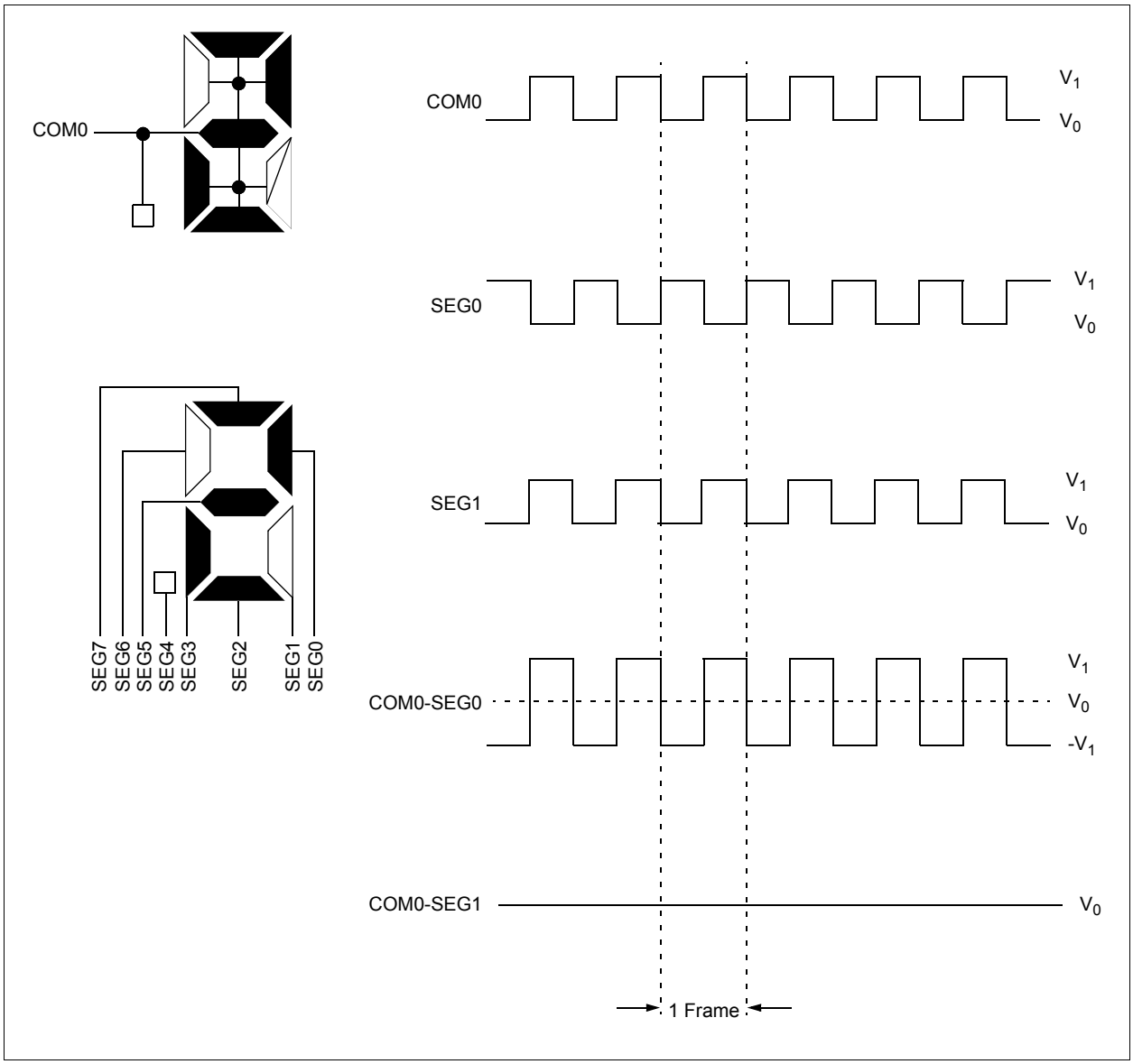

FIGURE 35-9: TYPE-A WAVEFORMS IN 1/2 MUX, 1/2 BIAS DRIVE

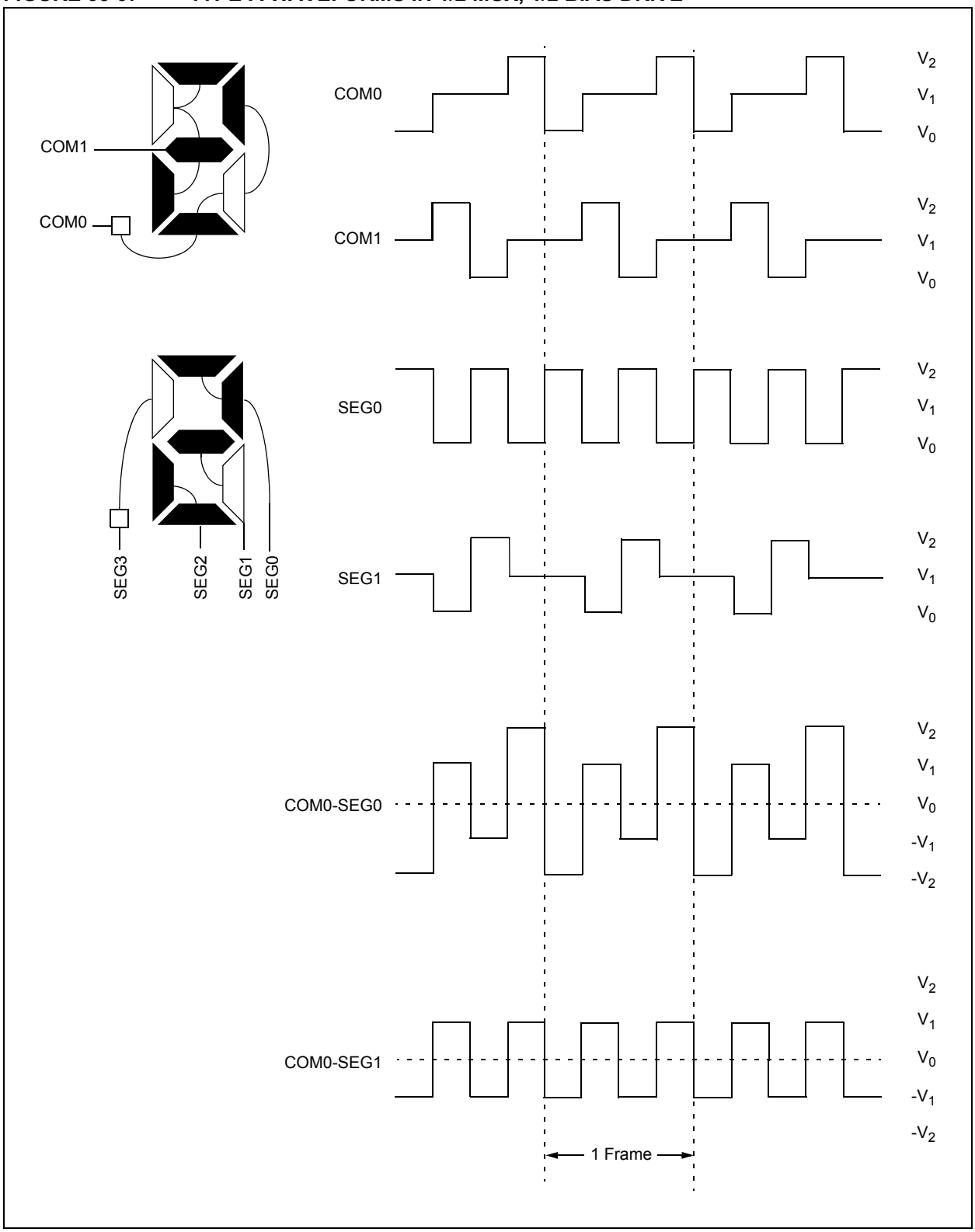

FIGURE 35-10: TYPE-B WAVEFORMS IN 1/2 MUX, 1/2 BIAS DRIVE

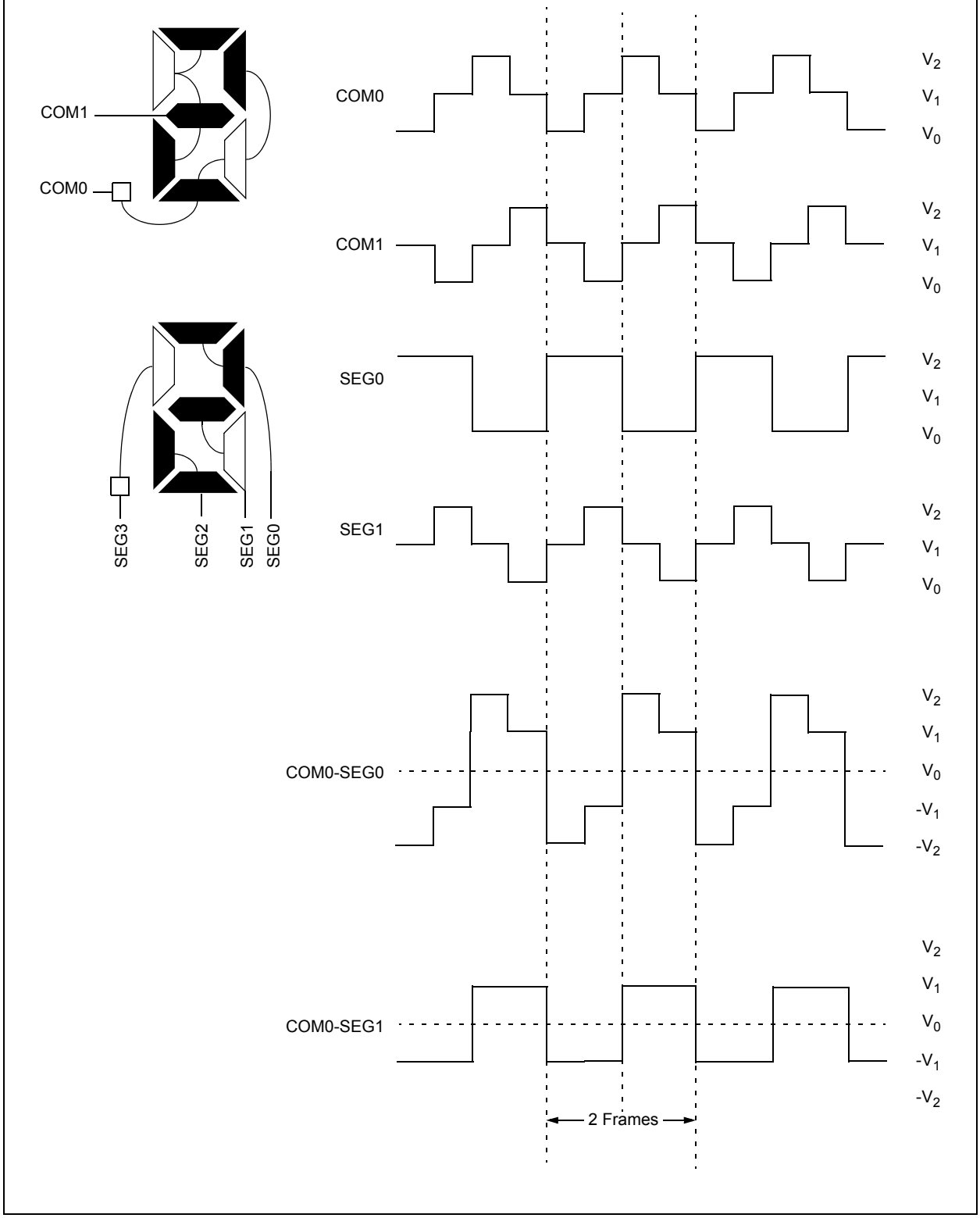

FIGURE 35-11: TYPE-A WAVEFORMS IN 1/3 MUX, 1/3 BIAS DRIVE

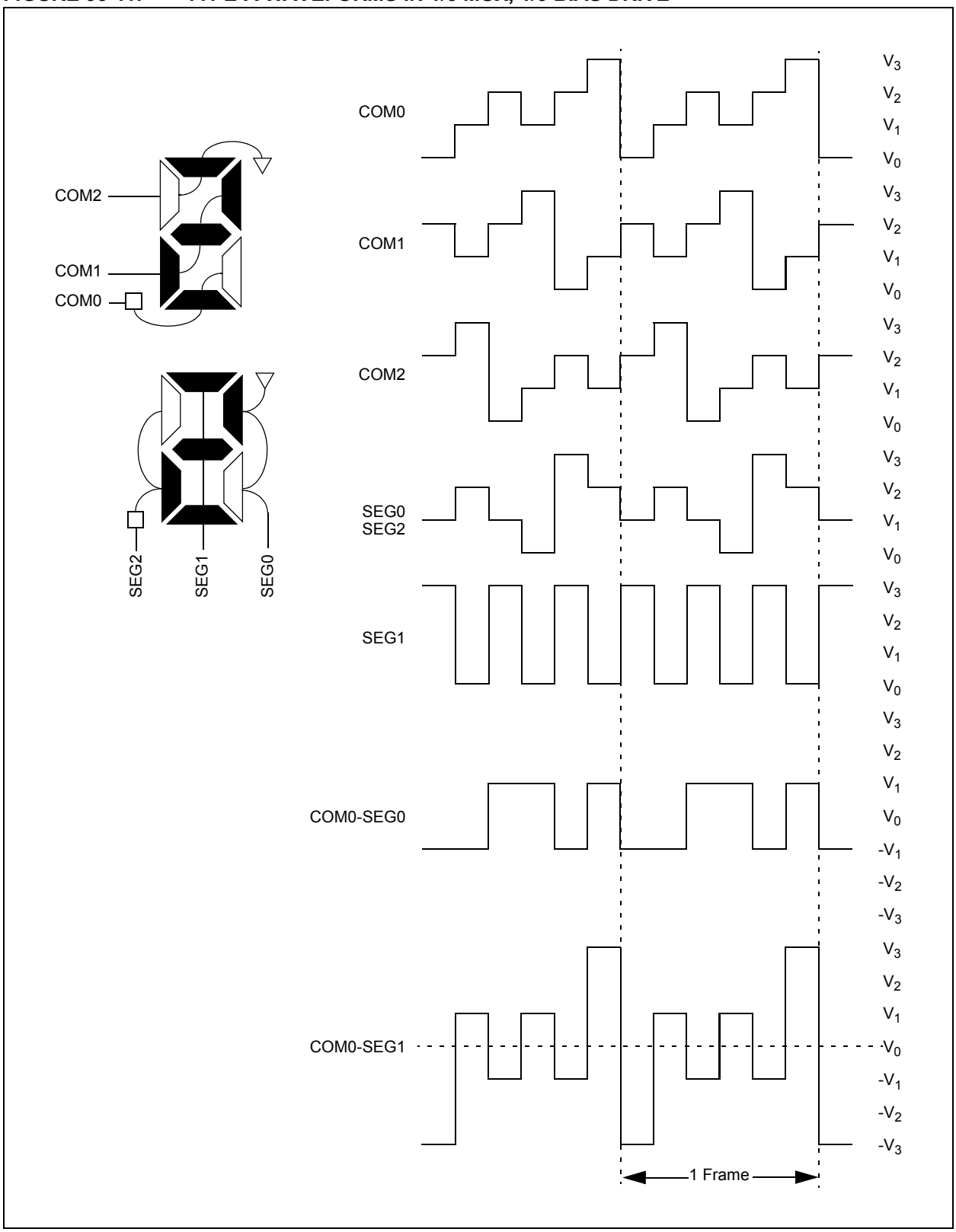

FIGURE 35-12: TYPE-B WAVEFORMS IN 1/3 MUX, 1/3 BIAS DRIVE

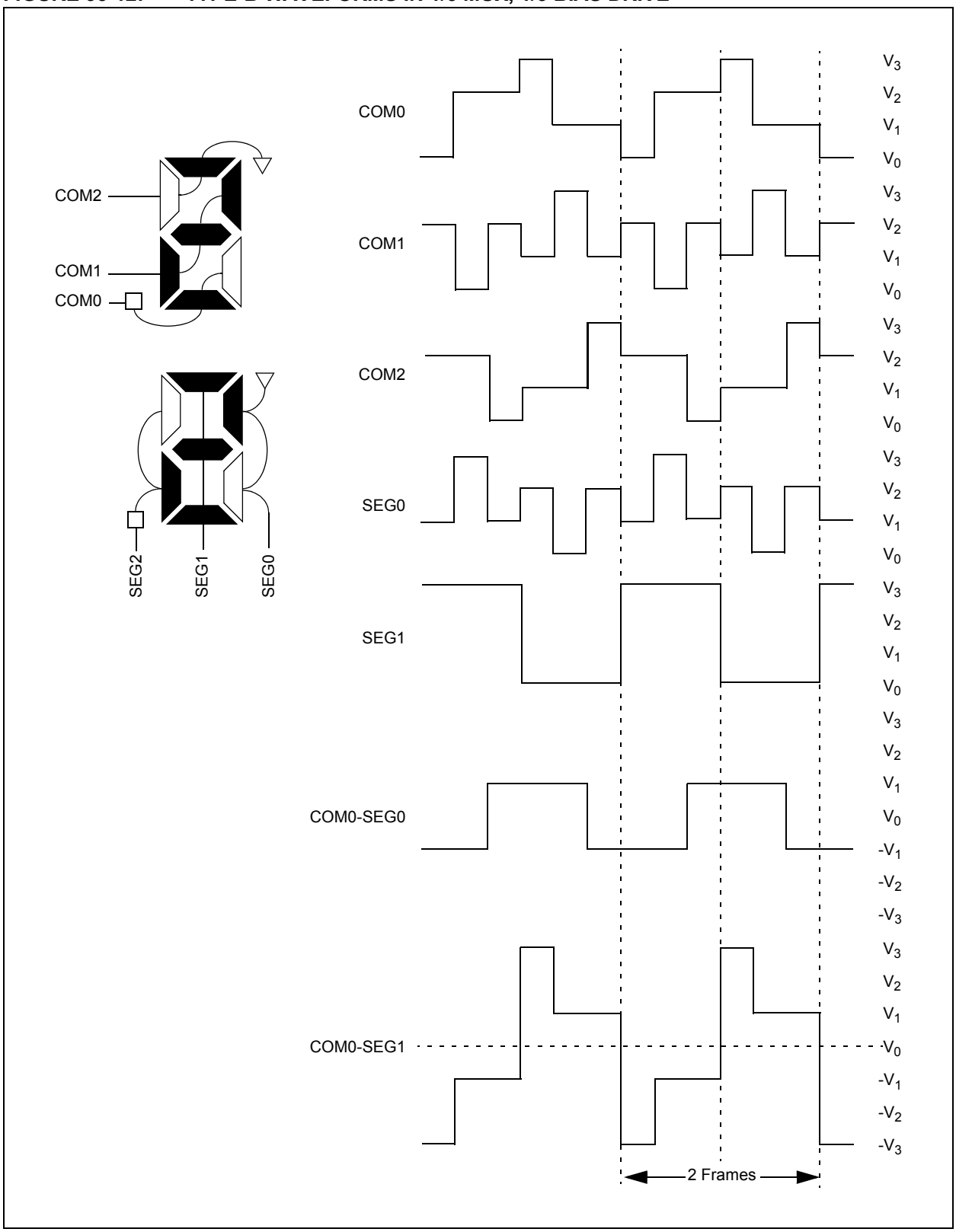

FIGURE 35-13: TYPE-A WAVEFORMS IN 1/4 MUX, 1/3 BIAS DRIVE

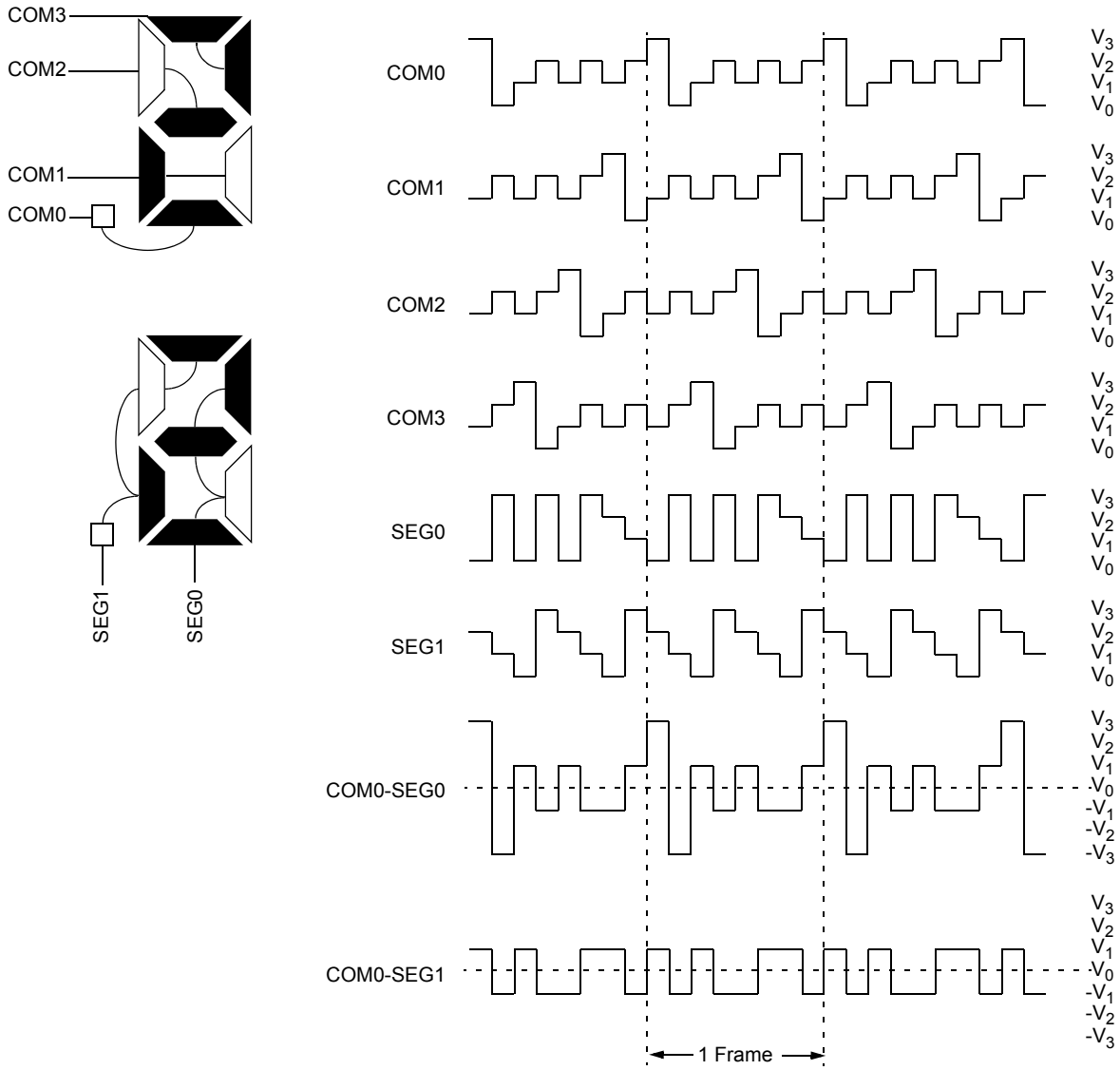

FIGURE 35-14: TYPE-B WAVEFORMS IN 1/4 MUX, 1/3 BIAS DRIVE

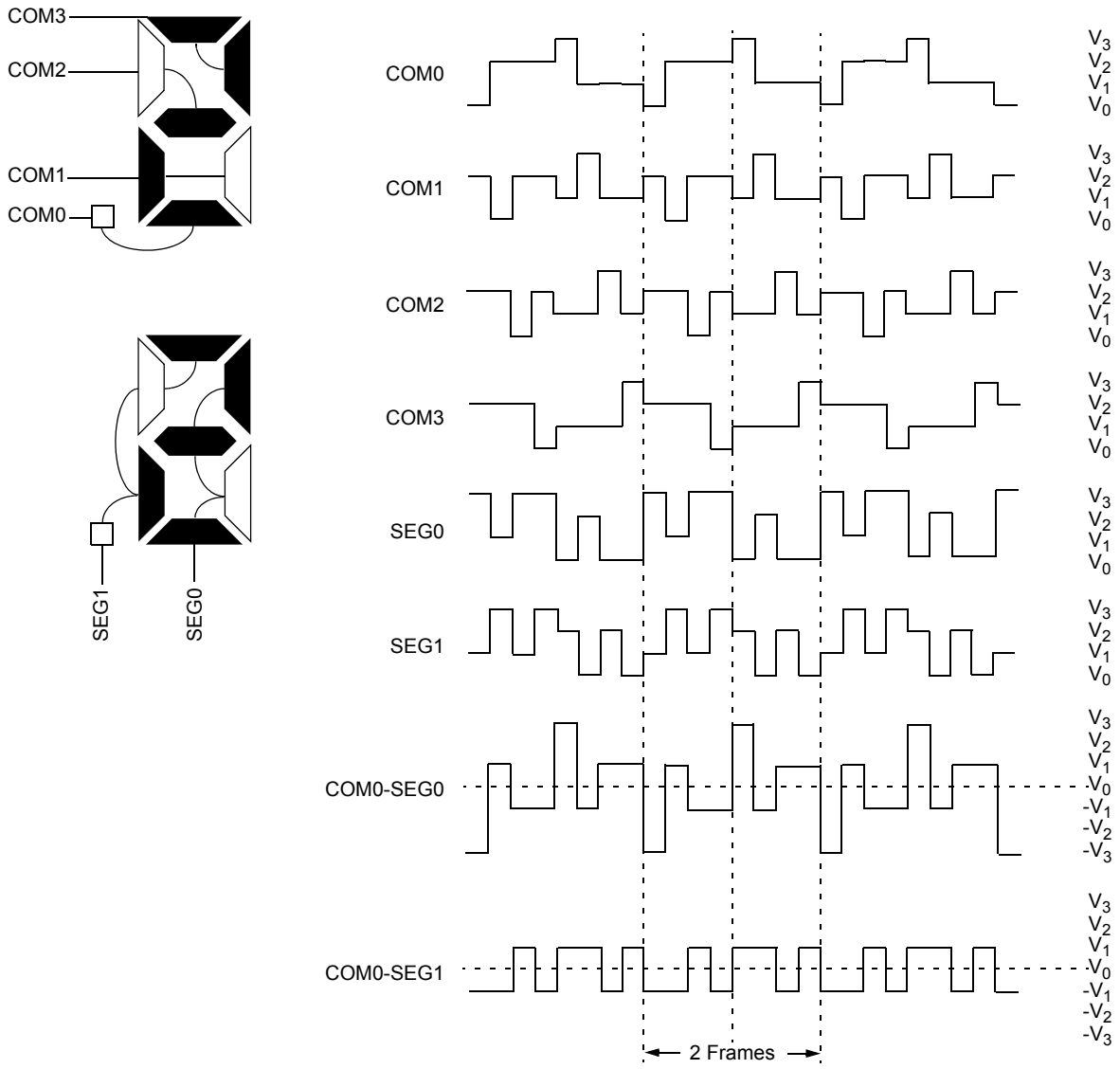

FIGURE 35-15: TYPE-B WAVEFORMS IN 1/8 MUX, 1/3 BIAS DRIVE

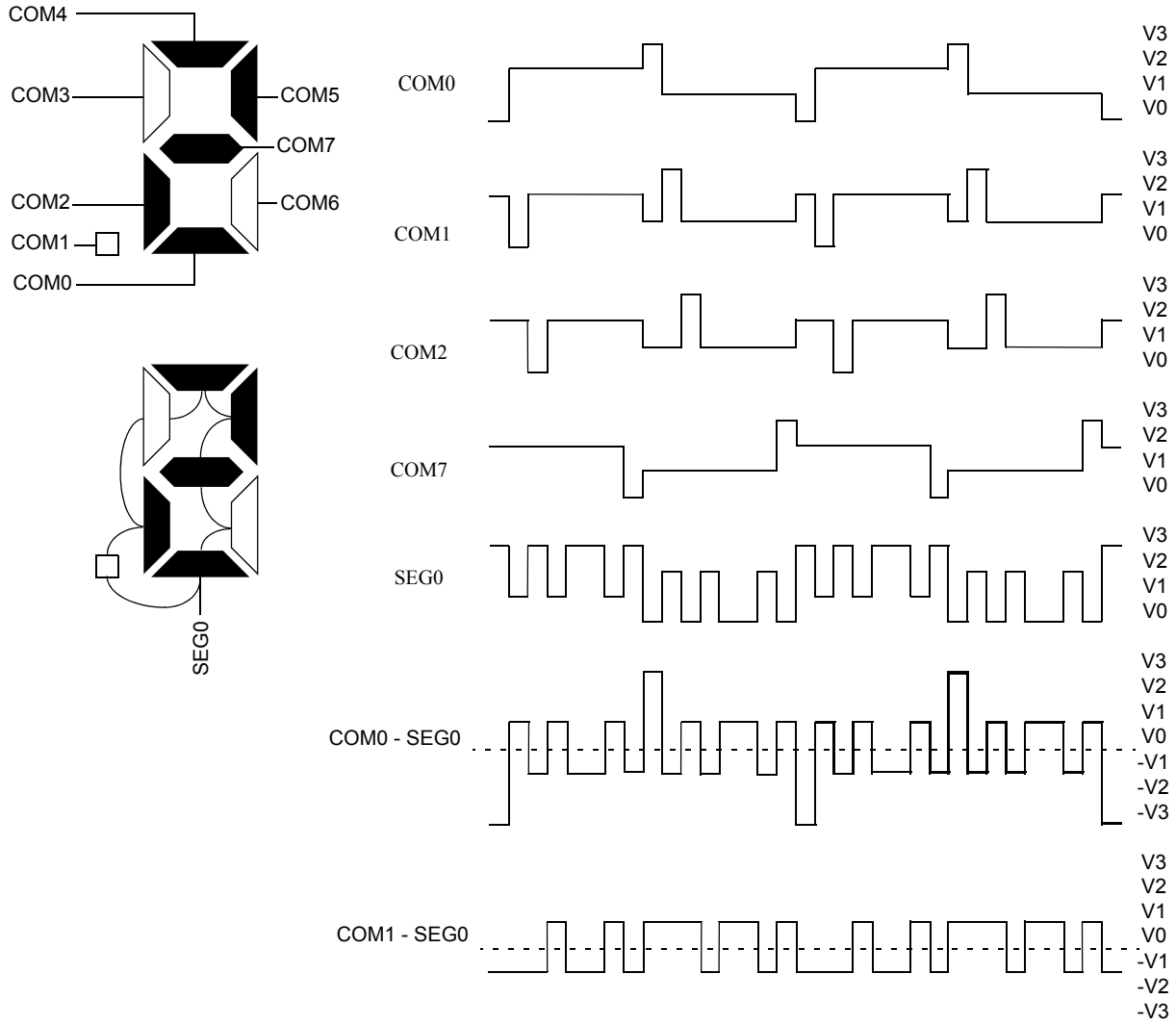

35.13 LCD Interrupts

The LCD timing generation provides an interrupt that defines the LCD frame timing. This interrupt can be used to coordinate the writing of the pixel data with the start of a new frame, which produces a visually crisp transition of the image.

This interrupt can also be used to synchronize external events to the LCD. For example, the interface to an external segment driver can be synchronized for segment data updates to the LCD frame.

A new frame is defined as beginning at the leading edge of the COM0 common signal. The interrupt will be set immediately after the LCD controller completes accessing all pixel data required for a frame. This will occur at a fixed interval before the frame boundary (T_{FINT}), as shown in Figure 35-16.

The LCD controller will begin to access the next frame between the interrupt and when the controller accesses the data (T_{FWR}). New data must be written within T_{FWR}, as this is when the LCD controller will begin to access the data for the next frame.

When the LCD driver is running with Type-B waveforms, and the LMUX<3:0> bits are not equal to '0001', the following issues may arise.

Since the DC voltage on the pixel takes two frames to maintain 0V, the pixel data must not change between subsequent frames. If the pixel data were allowed to change, the waveform for the odd frames would not necessarily be the complement of the waveform generated in the even frames and a DC component would be introduced into the panel.

Because of this, using Type-B waveforms requires synchronizing the LCD pixel updates to occur within a subframe after the frame interrupt.

To correctly sequence writing in Type-B, the interrupt only occurs on complete phase intervals. If the user attempts to write when the write is disabled, the WERR bit (LCDCON<5>) is set.

> **Note:** The interrupt is not generated when the Type-A waveform is selected and when the Type-B with no multiplex (static) is selected.

FIGURE 35-16: EXAMPLE WAVEFORMS AND INTERRUPT TIMING IN QUARTER DUTY CYCLE DRIVE

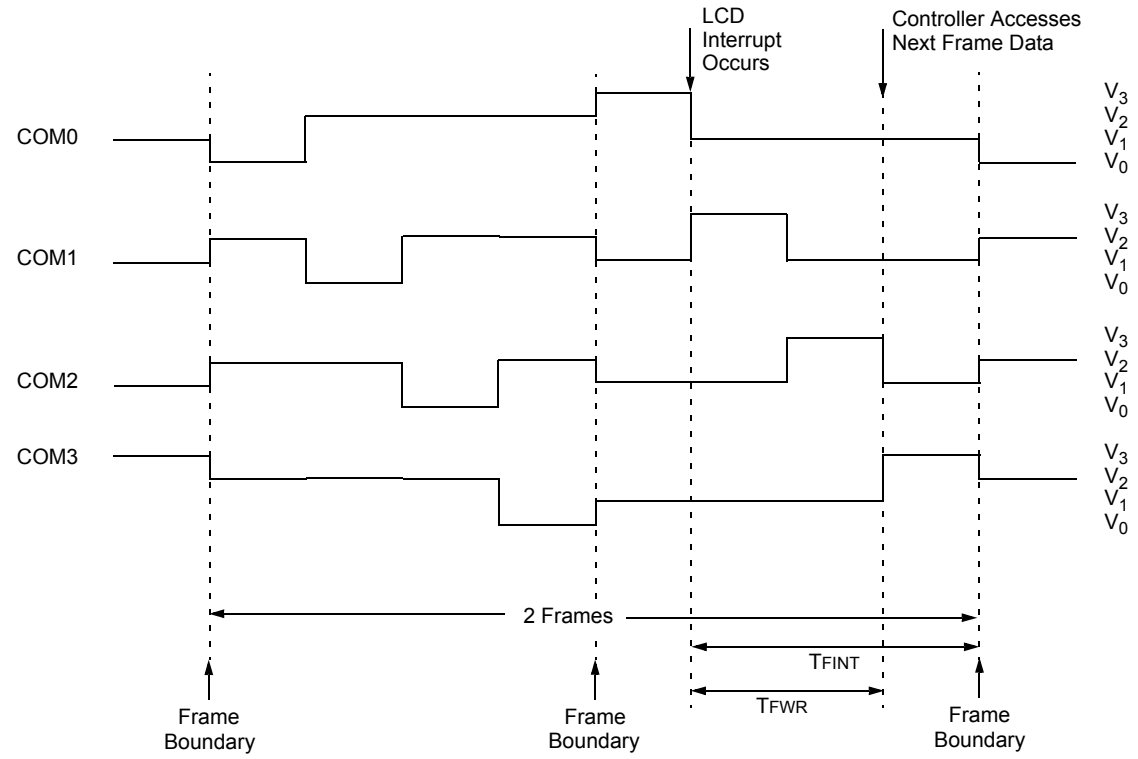

T_{FWR} = $T_{FRAME}/2$ * (LMUX<3:0> + 1) + $T_{CY}/2$

T_{FINT} = ($T_{FWR}/2$ – (2 T_{CY} + 40 ns)) → Minimum = 1.5($T_{FRAME}/4$) – (2 T_{CY} + 40 ns)
($T_{FWR}/2$ – (1 T_{CY} + 40 ns)) → Maximum = 1.5($T_{FRAME}/4$) – (1 T_{CY} + 40 ns)

35.14 Operation During Sleep

The LCD module can operate during Sleep. The selection is controlled by the SLPEN bit (LCDCON<6>). Setting the SLPEN bit allows the LCD module to go to Sleep. Clearing the SLPEN bit allows the module to continue to operate during Sleep.

If a `SLEEP` instruction is executed and SLPEN = `1`, the LCD module will cease all functions and go into a very low-current consumption mode. The module will stop operation immediately and drive 0 voltage on both segment and common lines. Figure 35-17 shows this operation.

The LCD module current consumption will not decrease in this mode, but the overall consumption of the device will be lower due to shut down of the core and other peripheral functions.

If a `SLEEP` instruction is executed and SLPEN = `0`, the module will continue to display the current contents of the LCDDATA registers. The LCD data cannot be changed.

FIGURE 35-17: SLEEP ENTRY/EXIT WHEN SLPEN = `1` OR CS<1:0> = `00`

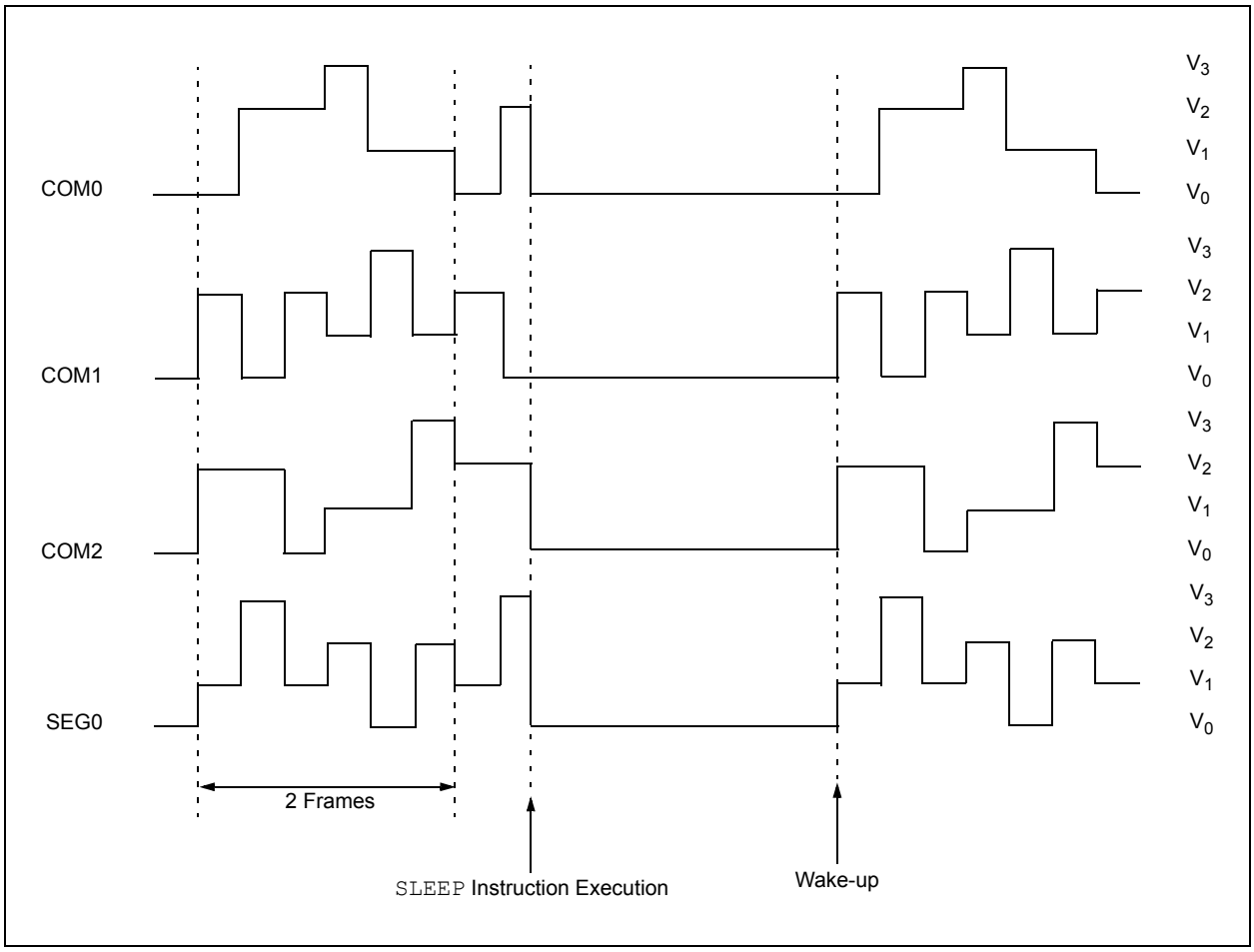

REGISTER 35-1: LCDCON: LCD CONTROL REGISTER

R/W-0	R/W-0	HS/C-0	R/W-0	R/W-0	R/W-0	R/W-0	R/W-0
LCDEN	SLPEN	WERR	CS	LMUX3	LMUX2	LMUX1	LMUX0
bit 7							bit 0

Legend:	C = Clearable bit	HS = Bit is set by hardware	
R = Readable bit	W = Writable bit	U = Unimplemented bit, read as ‘0’	
-n = Value at POR	‘1’ = Bit is set	‘0’ = Bit is cleared	x = Bit is unknown

bit 7 **LCDEN**: LCD Enable bit
1 = LCD module is enabled
0 = LCD module is disabled

bit 6 **SLPEN**: LCD Display Sleep-Enabled bit
1 = Module will stop driving in Sleep
0 = Module will continue driving in Sleep

bit 5 **WERR**: LCD Write Failed Error bit(1)
1 = Write failure to LCDDATA register occurred (must be reset in software)
0 = No LCD write error

bit 4 **CS**: Clock Source Select bit
1 = SOSC Selected
0 = LFINTOSC Selected

bit 3-0 **LMUX<3:0>**: Common Selection bits. Specifies the number of commons(2)

LMUX<3:0>	Multiplex	Bias
0000	All COMs off	—
0001	Static (COM0)	Static
0010	1/2 MUX (COM<1:0>)	1/2
0011	1/3 MUX (COM<2:0>)	1/3
0100	1/4 MUX (COM<3:0>)	1/3
0101	1/5 MUX (COM<4:0>)	1/3
0110	1/6 MUX (COM<5:0>)	1/3
0111	1/7 MUX (COM<6:0>)	1/3
1000	1/8 MUX (COM<7:0>)	1/3

Note 1: Bit can only be set by hardware and only cleared in software by writing to zero.
2: Cannot be changed when LCDEN = 1.

REGISTER 35-2: LCDPS: LCD PHASE REGISTER

R/W-0	R-0	R-0	R-0	R/W-0	R/W-0	R/W-0	R/W-0
WFT	—	LCDA	WA	LP<3:0>			
bit 7							bit 0

Legend:			
R = Readable bit	W = Writable bit	U = Unimplemented bit, read as ‘0’	
-n = Value at POR	‘1’ = Bit is set	‘0’ = Bit is cleared	x = Bit is unknown

bit 7 **WFT**: Waveform Type Select bit
`1` = Type-B waveform (phase changes on each frame boundary)
`0` = Type-A waveform (phase changes within each common type)

bit 6 **Reserved:** Read as ‘`0`’

bit 5 **LCDA**: LCD Active Status bit
`1` = LCD driver module is active
`0` = LCD driver module is inactive

bit 4 **WA**: LCD Write Allow Status bit
This Status bit reflects the value of `write_allow` signal.
`1` = Writes into the LCDDATAx registers are allowed
`0` = Writes into the LCDDATAx registers are not allowed

bit 3-0 **LP<3:0>**: LCD Prescaler Select bits
Work with LMUX<3:0> bits to select frame clock prescaler value.
4-Bit Programmable Prescaler = (LP<3:0> + 1)
`1111` = 1:16
`1110` = 1:15
`1101` = 1:14
`1100` = 1:13
`1011` = 1:12
`1010` = 1:11
`1001` = 1:10
`1000` = 1:9
`0111` = 1:8
`0110` = 1:7
`0101` = 1:6
`0100` = 1:5
`0011` = 1:4
`0010` = 1:3
`0001` = 1:2
`0000` = 1:1

REGISTER 35-3: LCDSEx: LCD SEGMENT x ENABLE REGISTER

R/W-0	R/W-0	R/W-0	R/W-0	R/W-0	R/W-0	R/W-0	R/W-0
SE(n)	SE(n)	SE(n)	SE(n)	SE(n)	SE(n)	SE(n)	SE(n)
bit 7							bit 0

Legend:			
R = Readable bit	W = Writable bit	U = Unimplemented bit, read as ‘0’	
-n = Value at POR	‘1’ = Bit is set	‘0’ = Bit is cleared	x = Bit is unknown

bit 7-0 **SE(n+7):SE(n)** Segment Enable bits
For LCDSE0: n = 0-7
For LCDSE1: n = 8-15
For LCDSE2: n = 16-23
For LCDSE3: n = 24-31
For LCDSE4: n = 32-39
For LCDSE5: n = 40-47
1 = Segment function of the pin is enabled, digital I/O is disabled
0 = Segment function of the pin is disabled, digital I/O is enabled

REGISTER 35-4: LCDDATAx: LCD DATA x REGISTER

R/W-x	R/W-x	R/W-x	R/W-x	R/W-x	R/W-x	R/W-x	R/W-x
SEGxCOMy	SEGxCOMy	SEGxCOMy	SEGxCOMy	SEGxCOMy	SEGxCOMy	SEGxCOMy	SEGxCOMy
bit 7							bit 0

Legend:			
R = Readable bit	W = Writable bit	U = Unimplemented bit, read as ‘0’	
-n = Value at POR	‘1’ = Bit is set	‘0’ = Bit is cleared	x = Bit is unknown

bit 7-0 **SEGxCOMy:** Pixel On bits
1 = Pixel on
0 = Pixel off

REGISTER 35-5: LCDVCON1: LCD VOLTAGE CONTROL 1 BITS

R/W-0/0	R/W-0/0	R-0	R-0	R-0	R/W-0/0	R/W-0/0	R/W-0/0
LPEN	EN5V	—	—	—	BIAS2	BIAS1	BIAS0
bit 7							bit 0

Legend:			
R = Readable bit	W = Writable bit	U = Unimplemented bit, read as ‘0’	
-n = Value at POR	‘1’ = Bit is set	‘0’ = Bit is cleared	x = Bit is unknown

bit 7 **LPEN**: LCD Charge Pump Low Power Enable (Low-Current (LC) mode enable)
`1` = LCD Charge Pump is operating in Low-Current mode
`0` = LCD Charge Pump is operating in Normal-Current mode

bit 6 **EN5V:** 5V Range Enable bit
`1` = The pump generates 5.0V voltage range
`0` = The pump generates 3.5V voltage range

bit 5-3 **Reserved**: Read as ‘`0`’

bit 2-0 **BIAS<2:0>:** Boost Pump Voltage Output Control bits (Only valid when LCDVSRC<2:0> = 100, 101, 110)
When EN5V = `0`
`111` = Set boost pump output to 3.50V
`110` = Set boost pump output to 3.40V
`101` = Set boost pump output to 3.30V
`100` = Set boost pump output to 3.20V
`011` = Set boost pump output to 3.10V
`010` = Set boost pump output to 3.00V
`001` = Set boost pump output to 2.90V
`000` = Set boost pump output to 2.80V
When EN5V = `1`
`111` = Set boost pump output to 5.01V
`110` = Set boost pump output to 4.83V
`101` = Set boost pump output to 4.66V
`100` = Set boost pump output to 4.48V
`011` = Set boost pump output to 4.31V
`010` = Set boost pump output to 4.13V
`001` = Set boost pump output to 3.95V
`000` = Set boost pump output to 3.78V

REGISTER 35-6: LCDVCON2: LCD VOLTAGE CONTROL 2 BITS

R/W-0/0	R-0	R-0	R-0	R/W-0/0	R/W-0/0	R/W-0/0	R/W-0/0
CPWDT	—	—	—	LCDVSRC<3:0>			
bit 7							bit 0

Legend:			
R = Readable bit	W = Writable bit	U = Unimplemented bit, read as ‘0’	
-n = Value at POR	‘1’ = Bit is set	‘0’ = Bit is cleared	x = Bit is unknown

bit 7 **CPWDT:** LCD Charge Pump Discharge Watchdog Disable bit
1 = The LCD Charge Pump Timer is disabled
0 = The LCD Charge Pump Timer is enabled

bit 6-4 **Reserved**: Read as ‘0’

bit 2-0 **LCDVSRC<3:0>:** LCD Voltage Source Control bits
1111-1010 = Reserved
1001 = LCD voltage supplied from Charge Pump + External Resistor Ladder(2)(3)
1000 = LCD voltage supplied from External Resistor Ladder(1)(4)
0111 = LCD voltage supplied from Charge Pump + Internal Resistor Ladder(2)(3)
0110 = LCD voltage supplied from Charge Pump Only (no Resistor ladder)(2)(3)
0101 = LCDvoltage supplied from Internal Resistor Ladder + External Capacitors + V_{DD} for VLCD3(1)(4)
0100 = LCDvoltage supplied from Internal Resistor Ladder + External Capacitors + External VLCD3(1)(4)
0011 = LCD voltage supplied from Internal Resistor Ladder + FVR for VLCD3(4)
0010 = LCD voltage supplied from Internal Resistor Ladder + V_{DD} for VLCD3(4)
0001 = LCD voltage supplied from Internal Resistor Ladder + External VLCD3(4)
0000 = All voltage sources are disabled

Note 1: VLCD1/2/3 used for 1/3 BIAS, VLCD3/2 for 1/2 BIAS, VLCD3 for Static BIAS.
2: VLCD1 is only used when (EN5V = 1 and LPEN = 0).
3: Only valid when LCDPEN = 1. If selected when LCDPEN = 0, module will behave as if all sources are disabled.
4: Only valid when LCDPEN = 0. If selected when LCDPEN = 1, module will behave as if all sources are disabled.

REGISTER 35-7: LCDRL: LCD INTERNAL REFERENCE LADDER CONTROL REGISTER

R/W-0/0	R/W-0/0	R/W-0/0	R/W-0/0	R/W-0/0	R/W-0/0	R/W-0/0	R/W-0/0
LRLAP1	LRLAP0	LRLBP1	LRLBP0	LCDIRI	LRLAT2	LRLAT1	LRLAT0
bit 7							bit 0

Legend:			
R = Readable bit	W = Writable bit	U = Unimplemented bit, read as ‘0’	
-n = Value at POR	‘1’ = Bit is set	‘0’ = Bit is cleared	x = Bit is unknown

bit 7-6 **LRLAP<1:0>**: LCD Reference Ladder A Time Power Control bits

During Time Interval A:
11 = Internal LCD reference is the High-Power (HP) ladder
10 = Internal LCD reference ladder is powered in Medium Power mode
01 = Internal LCD reference ladder is powered in Low-Power mode
00 = Internal LCD reference ladder is powered down and unconnected

bit 5-4 **LRLBP<1:0>**: LCD Reference Ladder B Time Power Control bits

During Time Interval B:
11 = Internal LCD reference ladder is powered in High-Power mode
10 = Internal LCD reference ladder is powered in Medium Power mode
01 = Internal LCD reference ladder is powered in Low-Power mode
00 = Internal LCD reference ladder is powered down and unconnected

bit 3 **LCDIRI:** LCD Internal Reference Buffer Idle Enable bit

Allows the Internal reference band gap buffer to shut down when the LCD Reference Ladder is in Power mode ‘B’
1 = When the LCD Reference Ladder is in power mode ‘B’, the LCD Internal Reference Band Gap buffer is disabled
0 = The LCD Internal Reference Buffer ignores the LCD Reference Ladder power mode

bit 2-0 **LRLAT<2:0>**: LCD Reference Ladder A Time Interval Control bits

Sets the number of 32 clock counts when the A Time Interval Power mode is active.

For Type-A Waveforms (WFT = 0):
111 = Internal LCD reference ladder is in A Power mode for 7 clocks and B Power mode for 9 clocks
110 = Internal LCD reference ladder is in A Power mode for 6 clocks and B Power mode for 10 clocks
101 = Internal LCD reference ladder is in A Power mode for 5 clocks and B Power mode for 11 clocks
100 = Internal LCD reference ladder is in A Power mode for 4 clocks and B Power mode for 12 clocks
011 = Internal LCD reference ladder is in A Power mode for 3 clocks and B Power mode for 13 clocks
010 = Internal LCD reference ladder is in A Power mode for 2 clocks and B Power mode for 14 clocks
001 = Internal LCD reference ladder is in A Power mode for 1 clock and B Power mode for 15 clocks
000 = Internal LCD reference ladder is always in B Power mode

For Type-B Waveforms (WFT = 1):
111 = Internal LCD reference ladder is in A Power mode for 7 clocks and B Power mode for 25 clocks
110 = Internal LCD reference ladder is in A Power mode for 6 clocks and B Power mode for 26 clocks
101 = Internal LCD reference ladder is in A Power mode for 5 clocks and B Power mode for 27 clocks
100 = Internal LCD reference ladder is in A Power mode for 4 clocks and B Power mode for 28 clocks
011 = Internal LCD reference ladder is in A Power mode for 3 clocks and B Power mode for 29 clocks
010 = Internal LCD reference ladder is in A Power mode for 2 clocks and B Power mode for 30 clocks
001 = Internal LCD reference ladder is in A Power mode for 1 clock and B Power mode for 31 clocks
000 = Internal LCD reference ladder is always in B Power mode

© 2017-2019 Microchip Technology Inc.

REGISTER 35-8: LCDREF: LCD REFERENCE VOLTAGE/CONTRAST CONTROL REGISTER

R-0	R-0	R-0	R-0	R-0	R/W-0/0	R/W-0/0	R/W-0/0
—	—	—	—	—	LCDCST2	LCDCST1	LCDCST0
bit 7							bit 0

Legend:			
R = Readable bit	W = Writable bit	U = Unimplemented bit, read as ‘0’	
-n = Value at POR	‘1’ = Bit is set	‘0’ = Bit is cleared	x = Bit is unknown

bit 7-3 **Unimplemented:** Read as ‘0’.

bit 2-0 **LCDCST<2:0>**: LCD Contrast Control bits[(1)]

Selects the resistance of the LCD contrast control resistor ladder

Bit Value	Resistor ladder
000 =	Contrast Control Bypassed (Maximum contrast).
001 =	Contrast Control Resistor ladder is at 1/7th of maximum resistance
010 =	Contrast Control Resistor ladder is at 2/7th of maximum resistance
011 =	Contrast Control Resistor ladder is at 3/7th of maximum resistance
100 =	Contrast Control Resistor ladder is at 4/7th of maximum resistance
101 =	Contrast Control Resistor ladder is at 5/7th of maximum resistance
110 =	Contrast Control Resistor ladder is at 6/7th of maximum resistance
111 =	Contrast Control Resistor ladder is at maximum resistance (Minimum contrast)

Note 1: This setting is only valid in Internal Resistance Ladder Only modes.

TABLE 35-10: SUMMARY OF REGISTERS ASSOCIATED WITH LCD MODULE

Name	Bit 7	Bit 6	Bit 5	Bit 4	Bit 3	Bit 2	Bit 1	Bit 0	Register on Page
INTCON	GIE	PEIE	—	—	—	—	—	INTEDG	164
PIR8	LCDIF	RTCCIF	—	—	—	SMT1PWAIF	SMT1PRAIF	SMT1IF	182
PIE8	LCDIE	RTCCIE	—	—	—	SMT1PWAIE	SMT1PRAIE	SMT1IE	173
PMD5	—	SMT1MD	LCDMD	CLC4MD	CLC3MD	CLC2MD	CLC1MD	—	274
LCDCON	LCDEN	SLPEN	WERR	CS	LMUX<3:0>				619
LCDPS	WFT	—	LCDA	WA	LP<3:0>				620
LCDSE0	SE07	SE06	SE05	SE04	SE03	SE02	SE01	SE00	621
LCDSE1	SE15	SE14	SE13	SE12	SE11	SE10	SE09	SE08	621
LCDSE2	SE23	SE22	SE21	SE20	SE19	SE18	SE17	SE16	621
LCDSE3	SE31	SE30	SE29	SE28	SE27	SE26	SE25	SE24	621
LCDSE4	SE39	SE38	SE37	SE36	SE35	SE34	SE33	SE32	621
LCDSE5	SE47	SE46	SE45	SE44	SE43	SE42	SE41	SE40	621
LCDVCON1	LPEN	EN5V	—	—	—	BIAS<2:0>			622
LCDVCON2	—	—	—	—	LCDVSRC<3:0>				623
LCDREF	—	—	—	—	—	LCDCST<2:0>			625
LCDRL	LRLAP<1:0>		LRLBP<1:0>		LCDIRI	LRLAT<2:0>			624
LCDDATA0	S07C0	S06C0	—	S04C0	S03C0	S02C0	S01C0	S00C0	621
LCDDATA1	S15C0	S14C0	S13C0	—	S11C0	S10C0	S09C0	S08C0	621
LCDDATA2	S23C0	S22C0	—	S20C0	S19C0	S18C0	—	—	621
LCDDATA3	S31C0	S30C0	S29C0	S28C0	S27C0	S26C0	S25C0	S24C0	621
LCDDATA4	—	—	—	—	—	S34C0	S33C0	S32C0	621
LCDDATA5	S47C0	S46C0	S45C0	S44C0	S43C0	S42C0	S41C0	S40C0	621
LCDDATA6	S07C1	S06C1	—	S04C1	S03C1	S02C1	S01C1	S00C1	621
LCDDATA7	S15C1	S14C1	S13C1	—	S11C1	S10C1	S09C1	S08C1	621
LCDDATA8	S23C1	S22C1	—	S20C1	S19C1	S18C1	—	—	621
LCDDATA9	S31C1	S30C1	S29C1	S28C1	S27C1	S26C1	S25C1	S24C1	621
LCDDATA10	—	—	—	—	—	S34C1	S33C1	S32C1	621
LCDDATA11	S47C1	S46C1	S45C1	S44C1	S43C1	S42C1	S41C1	S40C1	621
LCDDATA12	S07C2	S06C2	—	S04C2	S3C2	S2C2	S01C2	S00C2	621
LCDDATA13	S15C2	S14C2	S13C2	—	S11C2	S10C2	S09C2	S08C2	621
LCDDATA14	S23C2	S22C2	—	S20C2	S19C2	S18C2	—	—	621
LCDDATA15	S31C2	S30C2	S29C2	S28C2	S27C2	S26C2	S25C2	S24C2	621
LCDDATA16	—	—	—	—	—	S34C2	S33C2	S32C2	621
LCDDATA17	S47C2	S46C2	S45C2	S44C2	S43C2	S42C2	S41C2	S40C2	621
LCDDATA18	S15C3	S14C3	S13C3	—	SE11C3	S10C3	S09C3	S08C3	621
LCDDATA19	S23C3	S22C3	—	S20C3	S19C3	S18C3	—	—	621
LCDDATA20	S31C3	S30C3	S29C3	S28C3	S27C3	S26C3	S25C3	S24C3	621
LCDDATA21	—	—	—	—	—	S34C3	S33C3	S32C3	621
LCDDATA22	S47C3	S46C3	S45C3	S44C3	S43C3	S42C3	S41C3	S40C3	621
LCDDATA23	S07C4	S06C4	—	S04C4	S03C4	S02C4	S01C4	S00C4	621
LCDDATA24	S15C4	S14C4	S13C4	—	S11C4	S10C4	S09C4	S08C4	621
LCDDATA25	S23C4	S22C4	—	S20C4	S19C4	S18C4	—	—	621
LCDDATA26	S31C4	S30C4	S29C4	S28C4	S27C4	S26C4	S25C4	S24C4	621
LCDDATA27	—	—	—	—	—	S34C4	S33C4	S32C4	621
LCDDATA28	S47C4	S46C4	S45C4	S44C4	S43C4	S42C4	S41C4	S40C4	621
LCDDATA29	S07C5	S06C5	—	S04C5	S03C5	S02C5	S01C5	S00C5	621
LCDDATA30	S15C5	S14C5	S13C5	—	S11C5	S10C5	S09C5	S08C5	621
LCDDATA31	S23C5	S22C5	—	S20C5	S19C5	S18C5	—	—	621
LCDDATA32	S31C5	S30C5	S29C5	S28C5	S27C5	S26C5	S25C5	S24C5	621
LCDDATA33	—	—	—	—	—	S34C5	S33C5	S32C5	621

TABLE 35-10: SUMMARY OF REGISTERS ASSOCIATED WITH LCD MODULE (CONTINUED)

Name	Bit 7	Bit 6	Bit 5	Bit 4	Bit 3	Bit 2	Bit 1	Bit 0	Register on Page
LCDDATA34	S47C5	S46C5	S45C5	S44C5	S43C5	S42C5	S41C5	S40C5	621
LCDDATA35	S07C6	S06C6	—	S04C6	S03C6	S02C6	S01C6	S00C6	621
LCDDATA36	S15C6	S14C6	S13C6	—	S11C6	S10C6	S09C6	S08C6	621
LCDDATA37	S23C6	S22C6	—	S20C6	S19C6	S18C6	—	—	621
LCDDATA38	S31C6	S30C6	S29C6	S28C6	S27C6	S26C6	S25C6	S24C6	621
LCDDATA39	—	—	—	—	—	S34C6	S33C6	S32C6	621
LCDDATA40	S47C6	S46C6	S45C6	S44C6	S43C6	S42C6	S41C6	S40C6	621
LCDDATA41	S07C7	S06C7	—	S04C7	S03C7	S02C7	S01C7	S00C7	621
LCDDATA42	S15C7	S14C7	S13C7	—	S11C7	S10C7	S09C7	S08C7	621
LCDDATA43	S23C7	S22C7	—	S20C7	S19C7	S18C7	—	—	621
LCDDATA44	S31C7	S30C7	S29C7	S28C7	S27C7	S26C7	S25C7	S24C7	621
LCDDATA45	—	—	—	—	—	S34C7	S33C7	S32C7	621
LCDDATA46	S47C7	S46C7	S45C7	S44C7	S43C7	S42C7	S41C7	S40C7	621
LCDDATA47	S07C0	S06C0	—	S04COM0	S03C0	S02C0	S01C0	S00C0	621

36.0 IN-CIRCUIT SERIAL PROGRAMMING™ (ICSP™)

ICSP™ programming allows customers to manufacture circuit boards with unprogrammed devices. Programming can be done after the assembly process, allowing the device to be programmed with the most recent firmware or a custom firmware. Five pins are needed for ICSP™ programming:

- ICSPCLK
- ICSPDAT
- $\overline{\text{MCLR}}$/VPP
- VDD
- VSS

In Program/Verify mode the program memory, data EEPROM, User IDs and the Configuration Words are programmed through serial communications. The ICSPDAT pin is a bidirectional I/O used for transferring the serial data and the ICSPCLK pin is the clock input. For more information on ICSP™ refer to the *"PIC16(L)F191XX Memory Programming Specification"* (DS40001880).

36.1 High-Voltage Programming Entry Mode

The device is placed into High-Voltage Programming Entry mode by holding the ICSPCLK and ICSPDAT pins low then raising the voltage on $\overline{\text{MCLR}}$/VPP to VIHH.

36.2 Low-Voltage Programming Entry Mode

The Low-Voltage Programming Entry mode allows the PIC® Flash MCUs to be programmed using VDD only, without high voltage. When the LVP bit of Configuration Words is set to '1', the low-voltage ICSP programming entry is enabled. To disable the Low-Voltage ICSP mode, the LVP bit must be programmed to '0'. The LVP bit can only be reprogrammed to '0' by using the High-Voltage Programming mode.

Entry into the Low-Voltage Programming Entry mode requires the following steps:

1. $\overline{\text{MCLR}}$ is brought to VIL.
2. A 32-bit key sequence is presented on ICSPDAT, while clocking ICSPCLK.

Once the key sequence is complete, $\overline{\text{MCLR}}$ must be held at VIL for as long as Program/Verify mode is to be maintained.

If low-voltage programming is enabled (LVP = 1), the $\overline{\text{MCLR}}$ Reset function is automatically enabled and cannot be disabled. See **Section 8.6"MCLR"** for more information.

36.3 Common Programming Interfaces

Connection to a target device is typically done through an ICSP™ header. A commonly found connector on development tools is the RJ-11 in the 6P6C (6-pin, 6-connector) configuration. See Figure 36-1.

FIGURE 36-1: ICD RJ-11 STYLE CONNECTOR INTERFACE

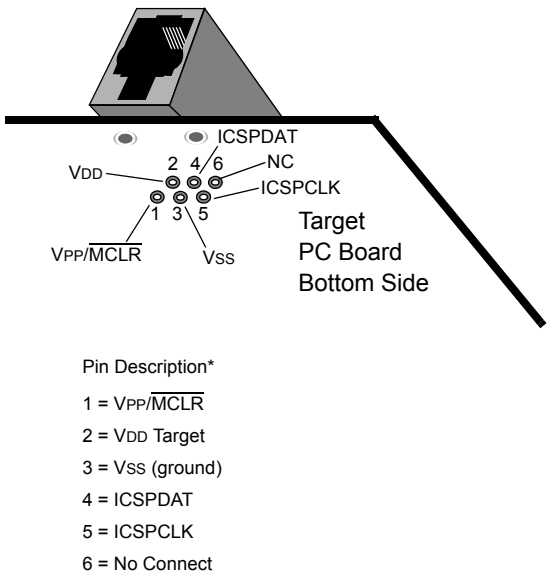

Another connector often found in use with the PICkit™ programmers is a standard 6-pin header with 0.1 inch spacing. Refer to Figure 36-2.

For additional interface recommendations, refer to your specific device programmer manual prior to PCB design.

It is recommended that isolation devices be used to separate the programming pins from other circuitry. The type of isolation is highly dependent on the specific application and may include devices such as resistors, diodes, or even jumpers. See Figure 36-3 for more information.

FIGURE 36-2: PICkit™ PROGRAMMER STYLE CONNECTOR INTERFACE

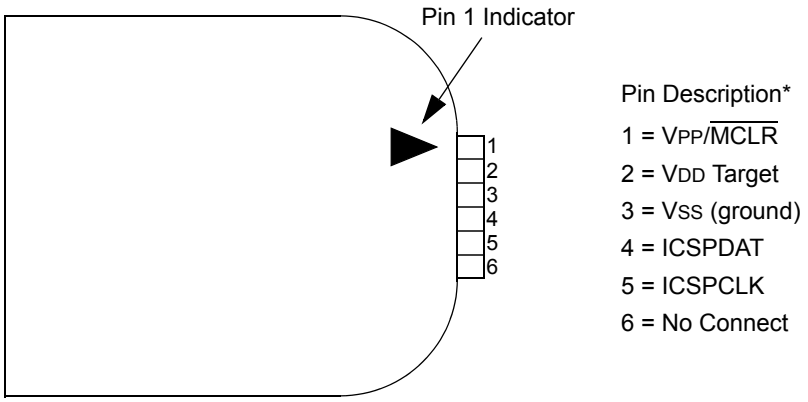

* The 6-pin header (0.100" spacing) accepts 0.025" square pins.

FIGURE 36-3: TYPICAL CONNECTION FOR ICSP™ PROGRAMMING

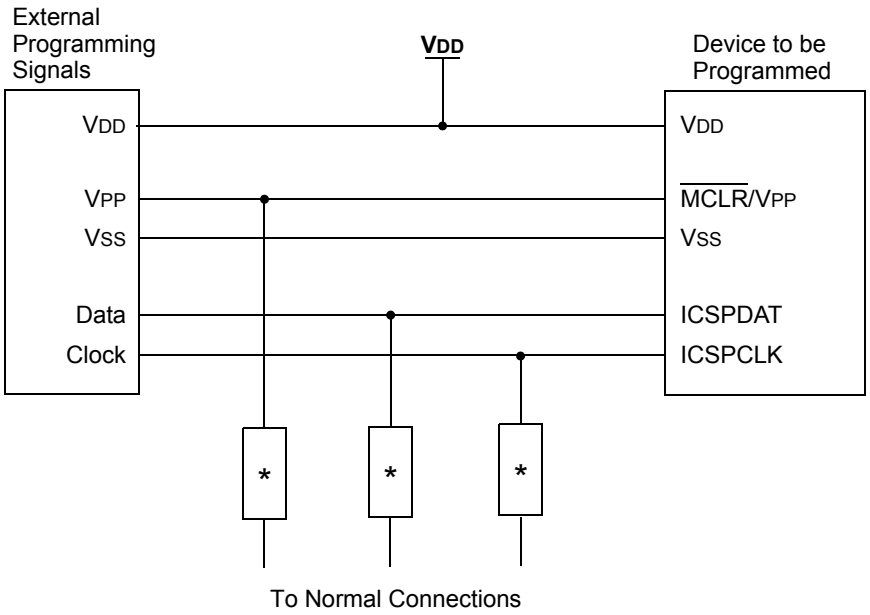

* Isolation devices (as required).

37.0 INSTRUCTION SET SUMMARY

Each instruction is a 14-bit word containing the operation code (opcode) and all required operands. The opcodes are broken into three broad categories.

- Byte Oriented
- Bit Oriented
- Literal and Control

The literal and control category contains the most varied instruction word format.

Table 37-3 lists the instructions recognized by the MPASM™ assembler.

All instructions are executed within a single instruction cycle, with the following exceptions, which may take two or three cycles:

- Subroutine entry takes two cycles (`CALL`, `CALLW`)
- Returns from interrupts or subroutines take two cycles (`RETURN`, `RETLW`, `RETFIE`)
- Program branching takes two cycles (`GOTO`, `BRA`, `BRW`, `BTFSS`, `BTFSC`, `DECFSZ`, `INCSFZ`)
- One additional instruction cycle will be used when any instruction references an indirect file register and the file select register is pointing to program memory.

One instruction cycle consists of 4 oscillator cycles; for an oscillator frequency of 4 MHz, this gives a nominal instruction execution rate of 1 MHz.

All instruction examples use the format '`0xhh`' to represent a hexadecimal number, where '`h`' signifies a hexadecimal digit.

37.1 Read-Modify-Write Operations

Any `WRITE` instruction that specifies a file register as part of the instruction performs a Read-Modify-Write (R-M-W) operation. The register is read, the data is modified, and the result is stored according to either the working (W) register, or the originating file register, depending on the state of the destination designator 'd' (see Table 37-1 for more information).

TABLE 37-1: OPCODE FIELD DESCRIPTIONS

Field	Description
f	Register file address (0x00 to 0x7F)
W	Working register (accumulator)
b	Bit address within an 8-bit file register
k	Literal field, constant data or label
x	Don't care location (= `0` or `1`). The assembler will generate code with x = `0`. It is the recommended form of use for compatibility with all Microchip software tools.
d	Destination select; d = `0`: store result in W, d = `1`: store result in file register f.
n	FSR or INDF number. (0-1)
mm	Prepost increment-decrement mode selection

TABLE 37-2: ABBREVIATION DESCRIPTIONS

Field	Description
PC	Program Counter
$\overline{TO}$	Time-Out bit
C	Carry bit
DC	Digit Carry bit
Z	Zero bit
$\overline{PD}$	Power-Down bit

37.2 General Format for Instructions

TABLE 37-3: INSTRUCTION SET

Mnemonic, Operands		Description	Cycles	14-Bit Opcode MSb			LSb	Status Affected	Notes
BYTE-ORIENTED FILE REGISTER OPERATIONS									
ADDWF	f, d	Add W and f	1	00	0111	dfff	ffff	C, DC, Z	2
ADDWFC	f, d	Add with Carry W and f	1	11	1101	dfff	ffff	C, DC, Z	2
ANDWF	f, d	AND W with f	1	00	0101	dfff	ffff	Z	2
ASRF	f, d	Arithmetic Right Shift	1	11	0111	dfff	ffff	C, Z	2
LSLF	f, d	Logical Left Shift	1	11	0101	dfff	ffff	C, Z	2
LSRF	f, d	Logical Right Shift	1	11	0110	dfff	ffff	C, Z	2
CLRF	f	Clear f	1	00	0001	1fff	ffff	Z	2
CLRW	–	Clear W	1	00	0001	0000	00xx	Z	
COMF	f, d	Complement f	1	00	1001	dfff	ffff	Z	2
DECF	f, d	Decrement f	1	00	0011	dfff	ffff	Z	2
INCF	f, d	Increment f	1	00	1010	dfff	ffff	Z	2
IORWF	f, d	Inclusive OR W with f	1	00	0100	dfff	ffff	Z	2
MOVF	f, d	Move f	1	00	1000	dfff	ffff	Z	2
MOVWF	f	Move W to f	1	00	0000	1fff	ffff		2
RLF	f, d	Rotate Left f through Carry	1	00	1101	dfff	ffff	C	2
RRF	f, d	Rotate Right f through Carry	1	00	1100	dfff	ffff	C	2
SUBWF	f, d	Subtract W from f	1	00	0010	dfff	ffff	C, DC, Z	2
SUBWFB	f, d	Subtract with Borrow W from f	1	11	1011	dfff	ffff	C, DC, Z	2
SWAPF	f, d	Swap nibbles in f	1	00	1110	dfff	ffff		2
XORWF	f, d	Exclusive OR W with f	1	00	0110	dfff	ffff	Z	2
BYTE ORIENTED SKIP OPERATIONS									
DECFSZ	f, d	Decrement f, Skip if 0	1(2)	00	1011	dfff	ffff		1, 2
INCFSZ	f, d	Increment f, Skip if 0	1(2)	00	1111	dfff	ffff		1, 2
BIT-ORIENTED FILE REGISTER OPERATIONS									
BCF	f, b	Bit Clear f	1	01	00bb	bfff	ffff		2
BSF	f, b	Bit Set f	1	01	01bb	bfff	ffff		2
BIT-ORIENTED SKIP OPERATIONS									
BTFSC	f, b	Bit Test f, Skip if Clear	1 (2)	01	10bb	bfff	ffff		1, 2
BTFSS	f, b	Bit Test f, Skip if Set	1 (2)	01	11bb	bfff	ffff		1, 2
LITERAL OPERATIONS									
ADDLW	k	Add literal and W	1	11	1110	kkkk	kkkk	C, DC, Z	
ANDLW	k	AND literal with W	1	11	1001	kkkk	kkkk	Z	
IORLW	k	Inclusive OR literal with W	1	11	1000	kkkk	kkkk	Z	
MOVLB	k	Move literal to BSR	1	00	000	0k	kkkk		
MOVLP	k	Move literal to PCLATH	1	11	0001	1kkk	kkkk		
MOVLW	k	Move literal to W	1	11	0000	kkkk	kkkk		
SUBLW	k	Subtract W from literal	1	11	1100	kkkk	kkkk	C, DC, Z	
XORLW	k	Exclusive OR literal with W	1	11	1010	kkkk	kkkk	Z	

Note 1: If the Program Counter (PC) is modified, or a conditional test is true, the instruction requires two cycles. The second cycle is executed as a NOP.

2: If this instruction addresses an INDF register and the MSb of the corresponding FSR is set, this instruction will require one additional instruction cycle.

TABLE 37-3: PIC16(L)F19155/56/75/76/85/86 INSTRUCTION SET (CONTINUED)

Mnemonic, Operands		Description	Cycles	14-Bit Opcode MSb			LSb	Status Affected	Notes
CONTROL OPERATIONS									
BRA	k	Relative Branch	2	11	001k	kkkk	kkkk		
BRW	–	Relative Branch with W	2	00	0000	0000	1011		
CALL	k	Call Subroutine	2	10	0kkk	kkkk	kkkk		
CALLW	–	Call Subroutine with W	2	00	0000	0000	1010		
GOTO	k	Go to address	2	10	1kkk	kkkk	kkkk		
RETFIE	k	Return from interrupt	2	00	0000	0000	1001		
RETLW	k	Return with literal in W	2	11	0100	kkkk	kkkk		
RETURN	–	Return from Subroutine	2	00	0000	0000	1000		
INHERENT OPERATIONS									
CLRWDT	–	Clear Watchdog Timer	1	00	0000	0110	0100	$\overline{TO}$, $\overline{PD}$	
NOP	–	No Operation	1	00	0000	0000	0000		
RESET	–	Software device Reset	1	00	0000	0000	0001		
SLEEP	–	Go into Standby or Idle mode	1	00	0000	0110	0011	$\overline{TO}$, $\overline{PD}$	
TRIS	f	Load TRIS register with W	1	00	0000	0110	0fff		
C-COMPILER OPTIMIZED									
ADDFSR	n, k	Add Literal k to FSRn	1	11	0001	0nkk	kkkk		
MOVIW	n mm	Move Indirect FSRn to W with pre/post inc/dec modifier, mm	1	00	0000	0001	0nmm	Z	**2, 3**
	k[n]	Move INDFn to W, Indexed Indirect.	1	11	1111	0nkk	kkkk	Z	**2**
MOVWI	n mm	Move W to Indirect FSRn with pre/post inc/dec modifier, mm	1	00	0000	0001	1nmm		**2, 3**
	k[n]	Move W to INDFn, Indexed Indirect.	1	11	1111	1nkk	kkkk		**2**

Note 1: If the Program Counter (PC) is modified, or a conditional test is true, the instruction requires two cycles. The second cycle is executed as a NOP.

2: If this instruction addresses an INDF register and the MSb of the corresponding FSR is set, this instruction will require one additional instruction cycle.

3: See **Section 37.3 "Instruction Descriptions"** for detailed MOVIW and MOVWI instruction descriptions.

37.3 Instruction Descriptions

ADDFSR — Add Literal to FSRn

Syntax:	[*label*] ADDFSR FSRn, k
Operands:	$-32 \le k \le 31$ $n \in [0, 1]$
Operation:	FSR(n) + k → FSR(n)
Status Affected:	None
Description:	The signed 6-bit literal ‘k’ is added to the contents of the FSRnH:FSRnL register pair. FSRn is limited to the range 0000h-FFFFh. Moving beyond these bounds will cause the FSR to wrap-around.

ADDLW — Add literal and W

Syntax:	[*label*] ADDLW k
Operands:	$0 \le k \le 255$
Operation:	(W) + k → (W)
Status Affected:	C, DC, Z
Description:	The contents of the W register are added to the 8-bit literal ‘k’ and the result is placed in the W register.

ADDWF — Add W and f

Syntax:	[*label*] ADDWF f,d
Operands:	$0 \le f \le 127$ $d \in [0,1]$
Operation:	(W) + (f) → (destination)
Status Affected:	C, DC, Z
Description:	Add the contents of the W register with register ‘f’. If ‘d’ is ‘0’, the result is stored in the W register. If ‘d’ is ‘1’, the result is stored back in register ‘f’.

ADDWFC — ADD W and CARRY bit to f

Syntax:	[*label*] ADDWFC f {,d}
Operands:	$0 \le f \le 127$ $d \in [0,1]$
Operation:	(W) + (f) + (C) → dest
Status Affected:	C, DC, Z
Description:	Add W, the Carry flag and data memory location ‘f’. If ‘d’ is ‘0’, the result is placed in W. If ‘d’ is ‘1’, the result is placed in data memory location ‘f’.

ANDLW — AND literal with W

Syntax:	[*label*] ANDLW k
Operands:	$0 \le k \le 255$
Operation:	(W) .AND. (k) → (W)
Status Affected:	Z
Description:	The contents of W register are AND’ed with the 8-bit literal ‘k’. The result is placed in the W register.

ANDWF — AND W with f

Syntax:	[*label*] ANDWF f,d
Operands:	$0 \le f \le 127$ $d \in [0,1]$
Operation:	(W) .AND. (f) → (destination)
Status Affected:	Z
Description:	AND the W register with register ‘f’. If ‘d’ is ‘0’, the result is stored in the W register. If ‘d’ is ‘1’, the result is stored back in register ‘f’.

ASRF — Arithmetic Right Shift

Syntax:	[*label*] ASRF f {,d}
Operands:	$0 \le f \le 127$ $d \in [0,1]$
Operation:	(f<7>)→ dest<7> (f<7:1>) → dest<6:0>, (f<0>) → C,
Status Affected:	C, Z
Description:	The contents of register ‘f’ are shifted one bit to the right through the Carry flag. The MSb remains unchanged. If ‘d’ is ‘0’, the result is placed in W. If ‘d’ is ‘1’, the result is stored back in register ‘f’.

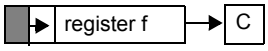

BCF	Bit Clear f
Syntax:	[*label*] BCF f,b
Operands:	0 ≤ f ≤ 127 0 ≤ b ≤ 7
Operation:	0 → (f<b>)
Status Affected:	None
Description:	Bit 'b' in register 'f' is cleared.

BRA	Relative Branch
Syntax:	[*label*] BRA label [*label*] BRA $+k
Operands:	-256 ≤ label - PC + 1 ≤ 255 -256 ≤ k ≤ 255
Operation:	(PC) + 1 + k → PC
Status Affected:	None
Description:	Add the signed 9-bit literal 'k' to the PC. Since the PC will have incremented to fetch the next instruction, the new address will be PC + 1 + k. This instruction is a 2-cycle instruction. This branch has a limited range.

BRW	Relative Branch with W
Syntax:	[*label*] BRW
Operands:	None
Operation:	(PC) + (W) → PC
Status Affected:	None
Description:	Add the contents of W (unsigned) to the PC. Since the PC will have incremented to fetch the next instruction, the new address will be PC + 1 + (W). This instruction is a 2-cycle instruction.

BSF	Bit Set f
Syntax:	[*label*] BSF f,b
Operands:	0 ≤ f ≤ 127 0 ≤ b ≤ 7
Operation:	1 → (f<b>)
Status Affected:	None
Description:	Bit 'b' in register 'f' is set.

BTFSC	Bit Test f, Skip if Clear
Syntax:	[*label*] BTFSC f,b
Operands:	0 ≤ f ≤ 127 0 ≤ b ≤ 7
Operation:	skip if (f<b>) = 0
Status Affected:	None
Description:	If bit 'b' in register 'f' is '1', the next instruction is executed. If bit 'b', in register 'f', is '0', the next instruction is discarded, and a NOP is executed instead, making this a 2-cycle instruction.

BTFSS	Bit Test f, Skip if Set
Syntax:	[*label*] BTFSS f,b
Operands:	0 ≤ f ≤ 127 0 ≤ b < 7
Operation:	skip if (f<b>) = 1
Status Affected:	None
Description:	If bit 'b' in register 'f' is '0', the next instruction is executed. If bit 'b' is '1', then the next instruction is discarded and a NOP is executed instead, making this a 2-cycle instruction.

CALL — Call Subroutine

Syntax:	[*label*] CALL k
Operands:	$0 \le k \le 2047$
Operation:	(PC)+ 1→ TOS, k → PC<10:0>, (PCLATH<6:3>) → PC<14:11>
Status Affected:	None
Description:	Call Subroutine. First, return address (PC + 1) is pushed onto the stack. The 11-bit immediate address is loaded into PC bits <10:0>. The upper bits of the PC are loaded from PCLATH. `CALL` is a 2-cycle instruction.

CALLW — Subroutine Call With W

Syntax:	[*label*] CALLW
Operands:	None
Operation:	(PC) +1 → TOS, (W) → PC<7:0>, (PCLATH<6:0>) → PC<14:8>
Status Affected:	None
Description:	Subroutine call with W. First, the return address (PC + 1) is pushed onto the return stack. Then, the contents of W is loaded into PC<7:0>, and the contents of PCLATH into PC<14:8>. `CALLW` is a 2-cycle instruction.

CLRF — Clear f

Syntax:	[*label*] CLRF f
Operands:	$0 \le f \le 127$
Operation:	00h → (f) `1` → Z
Status Affected:	Z
Description:	The contents of register ‘f’ are cleared and the Z bit is set.

CLRW — Clear W

Syntax:	[*label*] CLRW
Operands:	None
Operation:	00h → (W) `1` → Z
Status Affected:	Z
Description:	W register is cleared. Zero bit (Z) is set.

CLRWDT — Clear Watchdog Timer

Syntax:	[*label*] CLRWDT
Operands:	None
Operation:	00h → WDT `0` → WDT prescaler, `1` → $\overline{TO}$ `1` → $\overline{PD}$
Status Affected:	$\overline{TO}$, $\overline{PD}$
Description:	`CLRWDT` instruction resets the Watchdog Timer. It also resets the prescaler of the WDT. Status bits $\overline{TO}$ and $\overline{PD}$ are set.

COMF — Complement f

Syntax:	[*label*] COMF f,d
Operands:	$0 \le f \le 127$ $d \in [0,1]$
Operation:	$(\bar{f}) \rightarrow$ (destination)
Status Affected:	Z
Description:	The contents of register ‘f’ are complemented. If ‘d’ is ‘`0`’, the result is stored in W. If ‘d’ is ‘`1`’, the result is stored back in register ‘f’.

DECF — Decrement f

Syntax:	[*label*] DECF f,d
Operands:	$0 \le f \le 127$ $d \in [0,1]$
Operation:	(f) - 1 → (destination)
Status Affected:	Z
Description:	Decrement register ‘f’. If ‘d’ is ‘`0`’, the result is stored in the W register. If ‘d’ is ‘`1`’, the result is stored back in register ‘f’.

DECFSZ	Decrement f, Skip if 0
Syntax:	[*label*] DECFSZ f,d
Operands:	$0 \le f \le 127$ $d \in [0,1]$
Operation:	(f) - 1 → (destination); skip if result = 0
Status Affected:	None
Description:	The contents of register 'f' are decremented. If 'd' is '0', the result is placed in the W register. If 'd' is '1', the result is placed back in register 'f'. If the result is '1', the next instruction is executed. If the result is '0', then a NOP is executed instead, making it a 2-cycle instruction.

GOTO	Unconditional Branch
Syntax:	[*label*] GOTO k
Operands:	$0 \le k \le 2047$
Operation:	k → PC<10:0> PCLATH<6:3> → PC<14:11>
Status Affected:	None
Description:	GOTO is an unconditional branch. The 11-bit immediate value is loaded into PC bits <10:0>. The upper bits of PC are loaded from PCLATH<4:3>. GOTO is a 2-cycle instruction.

INCF	Increment f
Syntax:	[*label*] INCF f,d
Operands:	$0 \le f \le 127$ $d \in [0,1]$
Operation:	(f) + 1 → (destination)
Status Affected:	Z
Description:	The contents of register 'f' are incremented. If 'd' is '0', the result is placed in the W register. If 'd' is '1', the result is placed back in register 'f'.

INCFSZ	Increment f, Skip if 0
Syntax:	[*label*] INCFSZ f,d
Operands:	$0 \le f \le 127$ $d \in [0,1]$
Operation:	(f) + 1 → (destination), skip if result = 0
Status Affected:	None
Description:	The contents of register 'f' are incremented. If 'd' is '0', the result is placed in the W register. If 'd' is '1', the result is placed back in register 'f'. If the result is '1', the next instruction is executed. If the result is '0', a NOP is executed instead, making it a 2-cycle instruction.

IORLW	Inclusive OR literal with W
Syntax:	[*label*] IORLW k
Operands:	$0 \le k \le 255$
Operation:	(W) .OR. k → (W)
Status Affected:	Z
Description:	The contents of the W register are OR'ed with the 8-bit literal 'k'. The result is placed in the W register.

IORWF	Inclusive OR W with f
Syntax:	[*label*] IORWF f,d
Operands:	$0 \le f \le 127$ $d \in [0,1]$
Operation:	(W) .OR. (f) → (destination)
Status Affected:	Z
Description:	Inclusive OR the W register with register 'f'. If 'd' is '0', the result is placed in the W register. If 'd' is '1', the result is placed back in register 'f'.

LSLF	**Logical Left Shift**
Syntax:	[*label*] LSLF f {,d}
Operands:	$0 \le f \le 127$ $d \in [0,1]$
Operation:	(f<7>) → C (f<6:0>) → dest<7:1> 0 → dest<0>
Status Affected:	C, Z
Description:	The contents of register 'f' are shifted one bit to the left through the Carry flag. A '0' is shifted into the LSb. If 'd' is '0', the result is placed in W. If 'd' is '1', the result is stored back in register 'f'.

LSRF	**Logical Right Shift**
Syntax:	[*label*] LSRF f {,d}
Operands:	$0 \le f \le 127$ $d \in [0,1]$
Operation:	0 → dest<7> (f<7:1>) → dest<6:0>, (f<0>) → C,
Status Affected:	C, Z
Description:	The contents of register 'f' are shifted one bit to the right through the Carry flag. A '0' is shifted into the MSb. If 'd' is '0', the result is placed in W. If 'd' is '1', the result is stored back in register 'f'.

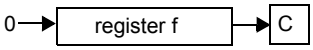

MOVF	**Move f**
Syntax:	[*label*] MOVF f,d
Operands:	$0 \le f \le 127$ $d \in [0,1]$
Operation:	(f) → (dest)
Status Affected:	Z
Description:	The contents of register f is moved to a destination dependent upon the status of d. If d = 0, destination is W register. If d = 1, the destination is file register f itself. d = 1 is useful to test a file register since status flag Z is affected.
Words:	1
Cycles:	1
Example:	`MOVF FSR, 0` After Instruction W = value in FSR register Z = 1

MOVIW — Move INDFn to W

Syntax: [*label*] MOVIW ++FSRn
[*label*] MOVIW --FSRn
[*label*] MOVIW FSRn++
[*label*] MOVIW FSRn--
[*label*] MOVIW k[FSRn]

Operands: n ∈ [0,1]
mm ∈ [00,01, 10, 11]
-32 ≤ k ≤ 31

Operation: INDFn → W
Effective address is determined by
- FSR + 1 (preincrement)
- FSR - 1 (predecrement)
- FSR + k (relative offset)

After the Move, the FSR value will be either:
- FSR + 1 (all increments)
- FSR - 1 (all decrements)
- Unchanged

Status Affected: Z

Mode	Syntax	mm
Preincrement	++FSRn	00
Predecrement	--FSRn	01
Postincrement	FSRn++	10
Postdecrement	FSRn--	11

Description: This instruction is used to move data between W and one of the indirect registers (INDFn). Before/after this move, the pointer (FSRn) is updated by pre/post incrementing/decrementing it.

Note: The INDFn registers are not physical registers. Any instruction that accesses an INDFn register actually accesses the register at the address specified by the FSRn.

FSRn is limited to the range 0000h - FFFFh. Incrementing/decrementing it beyond these bounds will cause it to wrap-around.

MOVLB — Move literal to BSR

Syntax: [*label*] MOVLB k

Operands: 0 ≤ k ≤

Operation: k → BSR

Status Affected: None

Description: The 6-bit literal ‘k’ is loaded into the Bank Select Register (BSR).

MOVLP — Move literal to PCLATH

Syntax: [*label*] MOVLP k

Operands: 0 ≤ k ≤ 127

Operation: k → PCLATH

Status Affected: None

Description: The 7-bit literal ‘k’ is loaded into the PCLATH register.

MOVLW — Move literal to W

Syntax: [*label*] MOVLW k

Operands: 0 ≤ k ≤ 255

Operation: k → (W)

Status Affected: None

Description: The 8-bit literal ‘k’ is loaded into W register. The “don’t cares” will assemble as ‘0’s.

Words: 1

Cycles: 1

Example:
```
MOVLW    0x5A
```
After Instruction
W = 0x5A

MOVWF — Move W to f

Syntax: [*label*] MOVWF f

Operands: 0 ≤ f ≤ 127

Operation: (W) → (f)

Status Affected: None

Description: Move data from W register to register ‘f’.

Words: 1

Cycles: 1

Example:
```
MOVWF   LATA
```
Before Instruction
LATA = 0xFF
W = 0x4F
After Instruction
LATA = 0x4F
W = 0x4F

MOVWI — Move W to INDFn

Syntax: [*label*] MOVWI ++FSRn
[*label*] MOVWI --FSRn
[*label*] MOVWI FSRn++
[*label*] MOVWI FSRn--
[*label*] MOVWI k[FSRn]

Operands: n ∈ [0,1]
mm ∈ [00,01, 10, 11]
-32 ≤ k ≤ 31

Operation: W → INDFn
Effective address is determined by
- FSR + 1 (preincrement)
- FSR - 1 (predecrement)
- FSR + k (relative offset)

After the Move, the FSR value will be either:
- FSR + 1 (all increments)
- FSR - 1 (all decrements)

Unchanged

Status Affected: None

Mode	Syntax	mm
Preincrement	++FSRn	00
Predecrement	--FSRn	01
Postincrement	FSRn++	10
Postdecrement	FSRn--	11

Description: This instruction is used to move data between W and one of the indirect registers (INDFn). Before/after this move, the pointer (FSRn) is updated by pre/post incrementing/decrementing it.

Note: The INDFn registers are not physical registers. Any instruction that accesses an INDFn register actually accesses the register at the address specified by the FSRn.

FSRn is limited to the range 0000h-FFFFh. Incrementing/decrementing it beyond these bounds will cause it to wrap-around.

The increment/decrement operation on FSRn WILL NOT affect any Status bits.

NOP — No Operation

Syntax: [*label*] NOP

Operands: None

Operation: No operation

Status Affected: None

Description: No operation.

Words: 1

Cycles: 1

Example:

```
NOP
```

RESET — Software Reset

Syntax: [*label*] RESET

Operands: None

Operation: Execute a device Reset. Resets the $\overline{RI}$ flag of the PCON register.

Status Affected: None

Description: This instruction provides a way to execute a hardware Reset by software.

RETFIE — Return from Interrupt

Syntax: [*label*] RETFIE k

Operands: None

Operation: TOS → PC,
1 → GIE

Status Affected: None

Description: Return from Interrupt. Stack is POPed and Top-of-Stack (TOS) is loaded in the PC. Interrupts are enabled by setting Global Interrupt Enable bit, GIE (INTCON<7>). This is a 2-cycle instruction.

Words: 1

Cycles: 2

Example:

```
RETFIE
```

After Interrupt
PC = TOS
GIE = 1

RETLW — Return with literal in W

Syntax:	[*label*] RETLW k
Operands:	$0 \le k \le 255$
Operation:	$k \rightarrow (W)$; $TOS \rightarrow PC$
Status Affected:	None
Description:	The W register is loaded with the 8-bit literal ‘k’. The program counter is loaded from the top of the stack (the return address). This is a 2-cycle instruction.
Words:	1
Cycles:	2

Example:

```
        CALL TABLE;W contains table
            ;offset value
        •   ;W now has table value
TABLE   •
        •
        ADDWF PC  ;W = offset
        RETLW k1  ;Begin table
        RETLW k2  ;
        •
        •
        •
        RETLW kn  ; End of table
```

Before Instruction
W = 0x07
After Instruction
W = value of k8

RETURN — Return from Subroutine

Syntax:	[*label*] RETURN
Operands:	None
Operation:	$TOS \rightarrow PC$
Status Affected:	None
Description:	Return from subroutine. The stack is POPed and the top of the stack (TOS) is loaded into the program counter. This is a 2-cycle instruction.

RLF — Rotate Left f through Carry

Syntax:	[*label*] RLF f,d
Operands:	$0 \le f \le 127$ $d \in [0,1]$
Operation:	See description below
Status Affected:	C
Description:	The contents of register ‘f’ are rotated one bit to the left through the Carry flag. If ‘d’ is ‘0’, the result is placed in the W register. If ‘d’ is ‘1’, the result is stored back in register ‘f’.

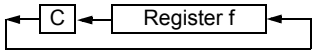

Words:	1
Cycles:	1

Example:

```
RLF     REG1,0
```

Before Instruction

```
REG1    =   1110 0110
C       =   0
```

After Instruction

```
REG1    =   1110 0110
W       =   1100 1100
C       =   1
```

RRF — Rotate Right f through Carry

Syntax:	[*label*] RRF f,d
Operands:	$0 \le f \le 127$ $d \in [0,1]$
Operation:	See description below
Status Affected:	C
Description:	The contents of register ‘f’ are rotated one bit to the right through the Carry flag. If ‘d’ is ‘0’, the result is placed in the W register. If ‘d’ is ‘1’, the result is placed back in register ‘f’.

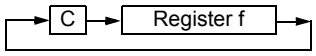

SLEEP — Enter Sleep mode

Syntax:	[*label*] SLEEP
Operands:	None
Operation:	00h → WDT, 0 → WDT prescaler, 1 → $\overline{TO}$, 0 → $\overline{PD}$
Status Affected:	$\overline{TO}$, $\overline{PD}$
Description:	The power-down Status bit, $\overline{PD}$ is cleared. Time-out Status bit, $\overline{TO}$ is set. Watchdog Timer and its prescaler are cleared. See **Section 11.2 "Sleep Mode"** for more information.

SUBLW — Subtract W from literal

Syntax:	[*label*] SUBLW k
Operands:	0 ≤ k ≤ 255
Operation:	k - (W) → (W)
Status Affected:	C, DC, Z
Description:	The W register is subtracted (2's complement method) from the 8-bit literal 'k'. The result is placed in the W register.

C = 0	W > k
C = 1	W ≤ k
DC = 0	W<3:0> > k<3:0>
DC = 1	W<3:0> ≤ k<3:0>

SUBWF — Subtract W from f

Syntax:	[*label*] SUBWF f,d
Operands:	0 ≤ f ≤ 127 d ∈ [0,1]
Operation:	(f) - (W) → (destination)
Status Affected:	C, DC, Z
Description:	Subtract (2's complement method) W register from register 'f'. If 'd' is '0', the result is stored in the W register. If 'd' is '1', the result is stored back in register 'f.

C = 0	W > f
C = 1	W ≤ f
DC = 0	W<3:0> > f<3:0>
DC = 1	W<3:0> ≤ f<3:0>

SUBWFB — Subtract W from f with Borrow

Syntax:	SUBWFB f {,d}
Operands:	0 ≤ f ≤ 127 d ∈ [0,1]
Operation:	(f) – (W) – ($\overline{B}$) → dest
Status Affected:	C, DC, Z
Description:	Subtract W and the BORROW flag (CARRY) from register 'f' (2's complement method). If 'd' is '0', the result is stored in W. If 'd' is '1', the result is stored back in register 'f'.

SWAPF — Swap Nibbles in f

Syntax:	[*label*] SWAPF f,d
Operands:	0 ≤ f ≤ 127 d ∈ [0,1]
Operation:	(f<3:0>) → (destination<7:4>), (f<7:4>) → (destination<3:0>)
Status Affected:	None
Description:	The upper and lower nibbles of register 'f' are exchanged. If 'd' is '0', the result is placed in the W register. If 'd' is '1', the result is placed in register 'f'.

TRIS	Load TRIS Register with W
Syntax:	[*label*] TRIS f
Operands:	$5 \le f \le 7$
Operation:	(W) → TRIS register ‘f’
Status Affected:	None
Description:	Move data from W register to TRIS register. When ‘f’ = 5, TRISA is loaded. When ‘f’ = 6, TRISB is loaded. When ‘f’ = 7, TRISC is loaded.

XORLW	Exclusive OR literal with W
Syntax:	[*label*] XORLW k
Operands:	$0 \le k \le 255$
Operation:	(W) .XOR. k → (W)
Status Affected:	Z
Description:	The contents of the W register are XOR’ed with the 8-bit literal ‘k’. The result is placed in the W register.

XORWF	Exclusive OR W with f
Syntax:	[*label*] XORWF f,d
Operands:	$0 \le f \le 127$ $d \in [0,1]$
Operation:	(W) .XOR. (f) → (destination)
Status Affected:	Z
Description:	Exclusive OR the contents of the W register with register ‘f’. If ‘d’ is ‘0’, the result is stored in the W register. If ‘d’ is ‘1’, the result is stored back in register ‘f’.

38.0 REGISTER SUMMARY

TABLE 38-1: REGISTER FILE SUMMARY FOR PIC16(L)F19155/56/75/76/85/86 DEVICES

Address	Name	Bit 7	Bit 6	Bit 5	Bit 4	Bit 3	Bit 2	Bit 1	Bit 0	Register on page
0Ch	PORTA	RA7	RA6	RA5	RA4	RA3	RA2	RA1	RA0	222
0Dh	PORTB	RB7	RB6	RB5	RB4	RB3	RB2	RB1	RB0	229
0Eh	PORTC	RC7	RC6	—	RC4	RC3	RC2	RC1	RC0	235
0Fh	PORTD(2)	RD7	RD6	RD5	RD4	RD3	RD2	RD1	RD0	241
010h	PORTE	—	—	—	—	RE3	RE2(2)	RE1(2)	RE0(2)	248
011h	PORTF(3)	RF7	RF6	RF5	RF4	RF3	RF2	RF1	RF0	248
012h	TRISA	TRISA7	TRISA6	—	TRISA4	TRISA3	TRISA2	TRISA1	TRISA0	222
013h	TRISB	TRISB7	TRISB6	TRISB5	TRISB4	TRISB3	TRISB2	TRISB1	TRISB0	229
014h	TRISC	TRISC7	TRISC6	—	TRISC4	TRISC3	TRISC2	TRISC1	TRISC0	235
015h	TRISD(2)	TRISD7	TRISD6	TRISD5	TRISD4	TRISD3	TRISD2	TRISD1	TRISD0	241
016h	TRISE	—	—	—	—	—	TRISE2(2)	TRISE1(2)	TRISE0(2)	248
017h	TRISF(3)	TRISF7	TRISF6	TRISF5	TRISF4	TRISF3	TRISF2	TRISF1	TRISF0	255
018h	LATA	LATA7	LATA6	—	LATA4	LATA3	LATA2	LATA1	LATA0	223
019h	LATB	LATB7	LATB6	LATB5	LATB4	LATB3	LATB2	LATB1	LATB0	230
01Ah	LATC	LATC7	LATC6	—	LATC4	LATC3	LATC2	LATC1	LATC0	236
01Bh	LATD(2)	LATD7	LATD6	LATD5	LATD4	LATD3	LATD2	LATD1	LATD0	242
01Ch	LATE(2)	—	—	—	—	—	LATE2	LATE1	LATE0	249
01Dh	LATF(3)	LATF7	LATF6	LATF5	LATF4	LATF3	LATF2	LATF1	LATF0	256
01Eh	—	Unimplemented								—
01Fh	ADCPCON0	ADCPON	—	—	—	—	—	—	ADCPRDY	325
08Ch	ADLTHL	LTH								322
08Dh	ADLTHH	LTH								322
08Eh	ADUTHL	UTH								323
08Fh	ADUTHH	UTH								323
090h	ADERRL	ERR								322
091h	ADERRH	ERR								322
092h	ADSTPTL	STPT								321
093h	ADSTPTH	STPT								321
094h	ADFLTRL	FLTR								316
095h	ADFLTRH	FLTR								316
096h	ADACCL	ACC								320
097h	ADACCH	ACC								320
098h	ADACCU	—	—	—	—	—	—	ACC<17:16>		320
099h	ADCNT	CNT								316
09Ah	ADRPT	RPT								315
09Bh	ADPREVL	PREV								319
09Ch	ADPREVH	PREV								319
09Dh	ADRESL	RES								317
09Eh	ADRESH	RES								317
09Fh	ADPCH	—	—	ADPCH<5:0>						312
10Ch	ADACQL	ACQ<7:0>								314
10Dh	ADACQH	—	—	—	ACQ<4:0>					314
10Eh	ADCAP	—	—	—	ADCAP<4:0>					315
10Fh	ADPREL	PRE<7:0>								313

Legend: x = unknown, u = unchanged, q = depends on condition, - = unimplemented, read as '0', r = reserved. Shaded locations unimplemented, read as '0'.

Note 1: Unimplemented data memory locations, read as '0'.
2: Present only on PIC16(L)F19175/76/85/86.
3: Present only on PIC16(L)F19185/86.

TABLE 38-1: REGISTER FILE SUMMARY FOR PIC16(L)F19155/56/75/76/85/86 DEVICES

Address	Name	Bit 7	Bit 6	Bit 5	Bit 4	Bit 3	Bit 2	Bit 1	Bit 0	Register on page
110h	ADPREH	—	—	—	PRE<4:0>					313
111h	ADCON0	ON	CONT	—	CS	—	FM	—	GO	306
112h	ADCON1	PPOL	IPEN	GPOL	—	—	—	—	DSEN	307
113h	ADCON2	PSIS	CRS<2:0>			ACLR	MD<2:0>			308
114h	ADCON3	—	CALC<2:0>			SOI	TMD<2:0>			309
115h	ADSTAT	OV	UTHR	LTHR	MATH	—	STAT<2:0>			310
116h	ADREF	—	—	—	—	—	—	PREF<1:0>		311
117h	ADACT	—	—	—	ACT<4:0>					324
118h	ADCLK	—	—	CS<5:0>						311
119h	RC1REG	RC1REG								586
11Ah	TX1REG	TX1REG								586
11Bh	SP1BRGL	SP1BRGL								586
11Ch	SP1BRGH	SP1BRGH								587
11Dh	RC1STA	SPEN	RX9	SREN	CREN	ADDEN	FERR	OERR	RX9D	584
11Eh	TX1STA	CSRC	TX9	TXEN	SYNC	SENDB	BRGH	TRMT	TX9D	583
11Fh	BAUD1CON	ABDOVF	RCIDL	—	SCKP	BRG16	—	WUE	ABDEN	585
18Ch	SSP1BUF	SSPxBUF								563
18Dh	SSP1ADD	SSPxADD								562
18Eh	SSP1MSK	SSPxMSK								562
18Fh	SSP1STAT	SMP	CKE	D/$\overline{A}$	P	S	R/$\overline{W}$	UA	BF	558
190h	SSP1CON1	WCOL	SSPOV	SSPEN	CKP	SSPM3	SSPM2	SSPM1	SSPM0	559
191h	SSP1CON2	GCEN	ACKSTAT	ACKDT	ACKEN	RCEN	PEN	RSEN	SEN	560
192h	SSP1CON3	ACKTIM	PCIE	SCIE	BOEN	SDAHT	SBCDE	AHEN	DHEN	558
193h	—	Unimplemented								—
194h	—	Unimplemented								—
195h	—	Unimplemented								—
196h	—	Unimplemented								—
197h	—	Unimplemented								—
198h	—	Unimplemented								—
199h	—	Unimplemented								—
19Ah	—	Unimplemented								—
19Bh	—	Unimplemented								—
19Ch	—	Unimplemented								—
19Dh	—	Unimplemented								—
19Eh	—	Unimplemented								—
19Fh	—	Unimplemented								—
20Ch	TMR1L	TMR1L7	TMR1L6	TMR1L5	TMR1L4	TMR1L3	TMR1L2	TMR1L1	TMR1L0	372
20Dh	TMR1H	TMR1H7	TMR1H6	TMR1H5	TMR1H4	TMR1H3	TMR1H2	TMR1H1	TMR1H0	372
20Eh	T1CON	—	—	CKPS<1:0>		—	$\overline{SYNC}$	RD16	ON	380
20Fh	T1GCON	GE	GPOL	GTM	GSPM	GGO/$\overline{DONE}$	GVAL	—	—	381
210h	T1GATE	—	—	—	GSS<4:0>					383
211h	T1CLK	—	—	—	—	CS<3:0>				382

Legend: x = unknown, u = unchanged, q = depends on condition, - = unimplemented, read as '0', r = reserved. Shaded locations unimplemented, read as '0'.

Note 1: Unimplemented data memory locations, read as '0'.

© 2017-2019 Microchip Technology Inc.

TABLE 38-1: REGISTER FILE SUMMARY FOR PIC16(L)F19155/56/75/76/85/86 DEVICES

Address	Name	Bit 7	Bit 6	Bit 5	Bit 4	Bit 3	Bit 2	Bit 1	Bit 0	Register on page
212h	—	Unimplemented								—
213h	—	Unimplemented								—
214h	—	Unimplemented								—
215h	—	Unimplemented								—
216h	—	Unimplemented								—
217h	—	Unimplemented								—
218h	—	Unimplemented								—
219h	—	Unimplemented								—
21Ah	—	Unimplemented								—
21Bh	—	Unimplemented								—
21Ch	—	Unimplemented								—
21Dh	—	Unimplemented								—
21Eh	CCPTMRS0	P4TSEL<1:0>		P3TSEL1:0>		C2TSEL<1:0>		C1TSEL<1:0>		462
21Fh	—	Unimplemented								—
28Ch	T2TMR	TMR2								386
28Dh	T2PR	PR2								386
28Eh	T2CON	ON	CKPS<2:0>			OUTPS<3:0>				405
28Fh	T2HLT	PSYNC	CKPOL	CKSYNC	MODE<4:0>					406
290h	T2CLKCON	—	—	—	—	CS<3:0>				404
291h	T2RST	—	—	—	—	RSEL<3:0>				407
292h	T4TMR	TMR4								386
293h	T4PR	PR4								386
294h	T4CON	ON	CKPS<2:0>			OUTPS<3:0>				405
295h	T4HLT	PSYNC	CKPOL	CKSYNC	MODE<4:0>					406
296h	T4CLKCON	—	—	—	—	CS<3:0>				404
297h	T4RST	—	—	—	—	RSEL<3:0>				407
298h	—	Unimplemented								—
299h	—	Unimplemented								—
29Ah	—	Unimplemented								—
29Bh	—	Unimplemented								—
29Ch	—	Unimplemented								—
29Dh	—	Unimplemented								—
29Eh	—	Unimplemented								—
29Fh	—	Unimplemented								—

Legend: x = unknown, u = unchanged, q = depends on condition, - = unimplemented, read as '0', r = reserved. Shaded locations unimplemented, read as '0'.

Note 1: Unimplemented data memory locations, read as '0'.

TABLE 38-1: REGISTER FILE SUMMARY FOR PIC16(L)F19155/56/75/76/85/86 DEVICES

Address	Name	Bit 7	Bit 6	Bit 5	Bit 4	Bit 3	Bit 2	Bit 1	Bit 0	Register on page
30Ch	CCPR1L	RL								461
30Dh	CCPR1H	RH								462
30Eh	CCP1CON	EN	—	OUT	FMT	MODE<3:0>				459
30Fh	CCP1CAP	—	—	—	—	—	CTS<3:0>			461
310h	CCPR2L	RL								461
311h	CCPR2H	RH								462
312h	CCP2CON	EN	—	OUT	FMT	MODE<3:0>				459
313h	CCP2CAP	—	—	—	—	—	CTS<3:0>			461
314h	PWM3DCL	PWM3DC<1:0>		—	—	—	—	—	—	469
315h	PWM3DCH	PWM3DC<9:0>								469
316h	PWM3CON	PWM3EN	—	PWM3OUT	PWM3POL	—	—	—	—	468
317h	—	Unimplemented								468
318h	PWM4DCL	PWM4DC<1:0>		—	—	—	—	—	—	469
319h	PWM4DCH	PWM4DC<9:0>								469
31Ah	PWM4CON	PWM4EN	—	PWM4OUT	PWM4POL	—	—	—	—	468
31Bh 31Fh	—	Unimplemented								—
38Ch	—	Unimplemented								—
38Dh	—	Unimplemented								—
38Eh	—	Unimplemented								—
38Fh	—	Unimplemented								—
390h	—	Unimplemented								—
391h	—	Unimplemented								—
392h	—	Unimplemented								—
393h	—	Unimplemented								—
394h	—	Unimplemented								—
395h	—	Unimplemented								—
396h	—	Unimplemented								—
397h	—	Unimplemented								—
398h	—	Unimplemented								—
399h	—	Unimplemented								—
39Ah	—	Unimplemented								—
39Bh	—	Unimplemented								—
39Ch	—	Unimplemented								—
39Dh	—	Unimplemented								—
39Eh	—	Unimplemented								—
39Fh	—	Unimplemented								—

Legend: x = unknown, u = unchanged, q = depends on condition, - = unimplemented, read as '0', r = reserved. Shaded locations unimplemented, read as '0'.

Note 1: Unimplemented data memory locations, read as '0'.

© 2017-2019 Microchip Technology Inc.

TABLE 38-1: REGISTER FILE SUMMARY FOR PIC16(L)F19155/56/75/76/85/86 DEVICES

Address	Name	Bit 7	Bit 6	Bit 5	Bit 4	Bit 3	Bit 2	Bit 1	Bit 0	Register on page
40Ch	—	Unimplemented								—
40Dh	HIDRVB	—	—	—	—	—	—	HIDB1	—	232
40Eh	—	Unimplemented								—
40Fh	—	Unimplemented								—
410h	—	Unimplemented								—
411h	—	Unimplemented								—
412h	—	Unimplemented								—
413h	—	Unimplemented								—
414h	—	Unimplemented								—
415h	—	Unimplemented								—
416h	—	Unimplemented								—
417h	—	Unimplemented								—
418h	—	Unimplemented								—
419h	—	Unimplemented								—
41Ah	—	Unimplemented								—
41Bh	—	Unimplemented								—
41Ch	—	Unimplemented								—
41Dh	—	Unimplemented								—
41Eh	—	Unimplemented								—
41Fh	—	Unimplemented								—
48Ch	SMT1TMRL	SMT1TMR								417
48Dh	SMT1TMRH	SMT1TMR								417
48Eh	SMT1TMRU	SMT1TMR								417
48Fh	SMT1CPRL	CPR								418
490h	SMT1CPRH	CPR								418
491h	SMT1CPRU	CPR								418
492h	SMT1CPWL	CPW								419
493h	SMT1CPWH	CPW								419
494h	SMT1CPWU	CPW								419
495h	SMT1PRL	SMT1PR								420
496h	SMT1PRH	SMT1PR								420
497h	SMT1PRU	SMT1PR								420
498h	SMT1CON0	EN	—	STP	WPOL	SPOL	CPOL	SMT1PS<1:0>		411
499h	SMT1CON1	SMT1GO	REPEAT	—	—	MODE<3:0>				412
49Ah	SMT1STAT	CPRUP	CPWUP	RST	—	—	TS	WS	AS	413
49Bh	SMT1CLK	—	—	—	—	—	CSEL<2:0>			414
49Ch	SMT1SIG	—	—	—	SSEL<4:0>					416
49Dh	SMT1WIN	—	—	—	WSEL<4:0>					415

Legend: x = unknown, u = unchanged, q = depends on condition, - = unimplemented, read as '0', r = reserved. Shaded locations unimplemented, read as '0'.

Note 1: Unimplemented data memory locations, read as '0'.

TABLE 38-1: REGISTER FILE SUMMARY FOR PIC16(L)F19155/56/75/76/85/86 DEVICES

Address	Name	Bit 7	Bit 6	Bit 5	Bit 4	Bit 3	Bit 2	Bit 1	Bit 0	Register on page
49Eh	—	Unimplemented								—
49Fh	—	Unimplemented								—
50Ch	—	Unimplemented								—
50Dh	—	Unimplemented								—
50Eh	—	Unimplemented								—
50Fh	—	Unimplemented								—
510h	—	Unimplemented								—
511h	—	Unimplemented								—
512h	—	Unimplemented								—
513h	—	Unimplemented								—
514h	—	Unimplemented								—
515h	—	Unimplemented								—
516h	—	Unimplemented								—
517h	—	Unimplemented								—
518h	—	Unimplemented								—
519h	—	Unimplemented								—
51Ah	—	Unimplemented								—

Legend: x = unknown, u = unchanged, q = depends on condition, - = unimplemented, read as '0', r = reserved. Shaded locations unimplemented, read as '0'.

Note 1: Unimplemented data memory locations, read as '0'.

© 2017-2019 Microchip Technology Inc.

TABLE 38-1: REGISTER FILE SUMMARY FOR PIC16(L)F19155/56/75/76/85/86 DEVICES

Address	Name	Bit 7	Bit 6	Bit 5	Bit 4	Bit 3	Bit 2	Bit 1	Bit 0	Register on page
51Bh	—	Unimplemented								—
51Ch	—	Unimplemented								—
51Dh	—	Unimplemented								—
51Eh	—	Unimplemented								—
51Fh	—	Unimplemented								—
58Ch	—	Unimplemented								—
58Dh	—	Unimplemented								—
58Eh	—	Unimplemented								—
58Fh	—	Unimplemented								—
590h	—	Unimplemented								—
591h	—	Unimplemented								—
592h	—	Unimplemented								—
593h	—	Unimplemented								—
594h	—	Unimplemented								—
595h	—	Unimplemented								—
596h	—	Unimplemented								—
597h	—	Unimplemented								—
598h	—	Unimplemented								—
599h	—	Unimplemented								—
59Ah	—	Unimplemented								—
59Bh	—	Unimplemented								—
59Ch	TMR0L	TMR0L								366
59Dh	TMR0H	TMR0H								366
59Eh	T0CON0	T0EN	—	T0OUT	T016BIT	T0OUTPS<3:0>				369
59Fh	T0CON1	T0CS<2:0>			T0ASYNC	T0CKPS<3:0>				370
60Ch	CWG1CLKCON	—	—	—	—	—	—	—	CS	493
60Dh	CWG1ISM	—	—	—	—	IS<3:0>				493
60Eh	CWG1DBR	—	—	DBR<5:0>						489
60Fh	CWG1DBF	—	—	DBF<5:0>						489
610h	CWG1CON0	EN	LD	—	—	—	MODE<2:0>			487
611h	CWG1CON1	—	—	IN	—	POLD	POLC	POLB	POLA	488
612h	CWG1AS0	SHUT-DOWN	REN	LSBD<1:0>		LSAC<1:0>		—	—	490
613h	CWG1AS1	—	—	—	AS4E	AS3E	AS2E	AS1E	AS0E	491
614h	CWG1STR	OVRD	OVRC	OVRB	OVRA	STRD	STRC	STRB	STRA	492
615h	—	Unimplemented								—
616h	—	Unimplemented								—
617h	—	Unimplemented								—
618h	—	Unimplemented								—
619h	—	Unimplemented								—
61Ah	—	Unimplemented								—
61Bh	—	Unimplemented								—
61Ch	—	Unimplemented								—
61Dh	—	Unimplemented								—
61Eh	—	Unimplemented								—
61Fh	—	Unimplemented								—
68Ch	—	Unimplemented								—

Legend: x = unknown, u = unchanged, q = depends on condition, - = unimplemented, read as '0', r = reserved. Shaded locations unimplemented, read as '0'.

Note 1: Unimplemented data memory locations, read as '0'.

TABLE 38-1: REGISTER FILE SUMMARY FOR PIC16(L)F19155/56/75/76/85/86 DEVICES

Address	Name	Bit 7	Bit 6	Bit 5	Bit 4	Bit 3	Bit 2	Bit 1	Bit 0	Register on page
68Dh	—	Unimplemented								—
68Eh	—	Unimplemented								—
68Fh	—	Unimplemented								—
690h	—	Unimplemented								—
691h	—	Unimplemented								—
692h	—	Unimplemented								—
693h	—	Unimplemented								—
694h	—	Unimplemented								—
695h	—	Unimplemented								—
696h	—	Unimplemented								—
697h	—	Unimplemented								—
698h	—	Unimplemented								—
699h	—	Unimplemented								—
69Ah	—	Unimplemented								—
69Bh	—	Unimplemented								—
69Ch	—	Unimplemented								—
69Dh	—	Unimplemented								—
69Eh	—	Unimplemented								—
69Fh	—	Unimplemented								—
70Ch	PIR0	—	—	TMR0IF	IOCIF	—	—	—	INTF	174
70Dh	PIR1	OSFIF	CSWIF	—	—	—	—	ADTIF	ADIF	175
70Eh	PIR2	—	ZCDIF	—	—	—	—	C2IF	C1IF	176
70Fh	PIR3	RC2IF	TX2IF	RC1IF	TX1IF	—	—	BCL1IF	SSP1IF	177
710h	PIR4	—	—	—	—	TMR4IF	—	TMR2IF	TMR1IF	178
711h	PIR5	CLC4IF	CLC3IF	CLC2IF	CLC1IF	—	—	—	TMR1GIF	179
712h	PIR6	CRIF	—	—	—	—	—	CCP2IF	CCP1IF	180
713h	PIR7	—	—	NVMIF	—	—	—	—	CWG1IF	181
714h	PIR8	LCDIF	RTCCIF	—	—	—	SMT1PWAIF	SMT1PRAIF	SMT1IF	182
715h	—	Unimplemented								—
716h	PIE0	—	—	TMR0IE	IOCIE	—	—	—	INTE	165
717h	PIE1	OSFIE	CSWIE	—	—	—	—	ADTIE	ADIE	166
718h	PIE2	—	ZCDIE	—	—	—	—	C2IE	C1IE	167
719h	PIE3	RC2IE	TX2IE	RC1IE	TX1IE	—	—	BCL1IE	SSP1IE	168
71Ah	PIE4	—	—	—	—	TMR4IF	—	TMR2IE	TMR1IE	169
71Bh	PIE5	CLC4IE	CLC3IE	CLC2IE	CLC1IE	—	—	—	TMR1GIE	170
71Ch	PIE6	CRIE	—	—	—	—	—	CCP2IE	CCP1IE	171
71Dh	PIE7	—	—	NVMIE	—	—	—	—	CWG1IE	172
71Eh	PIE8	LCDIE	RTCCIE	—	—	—	SMT1PWAIE	SMT1PRAIE	SMT1IE	173
71Fh	—	Unimplemented								—

Legend: x = unknown, u = unchanged, q = depends on condition, - = unimplemented, read as '0', r = reserved. Shaded locations unimplemented, read as '0'.

© 2017-2019 Microchip Technology Inc.

TABLE 38-1: REGISTER FILE SUMMARY FOR PIC16(L)F19155/56/75/76/85/86 DEVICES

Address	Name	Bit 7	Bit 6	Bit 5	Bit 4	Bit 3	Bit 2	Bit 1	Bit 0	Register on page
78Ch	—	Unimplemented								—
78Dh	—	Unimplemented								—
78Eh	—	Unimplemented								—
78Fh	—	Unimplemented								—
790h	—	Unimplemented								—
791h	—	Unimplemented								—
792h	—	Unimplemented								—
793h	—	Unimplemented								—
794h	—	Unimplemented								—
795h	—	Unimplemented								—
796h	PMD0	SYSCMD	FVRMD	ACTMD	—	—	NVMMD	—	IOCMD	269
797h	PMD1	—	—	—	TMR4MD	—	TMR2MD	TMR1MD	TMR0MD	270
798h	PMD2	RTCCMD	DACMD	ADCMD	—	—	CMP2MD	CMP1MD	ZCDMD	271
799h	PMD3	—	—	—	—	PWM4MD	PWM3MD	CCP2MD	CCP1MD	272
79Ah	PMD4	UART2MD	UART1MD	—	MSSP1MD	—	—	—	CWG1MD	273
79Bh	PMD5	—	SMT1MD	LCDMD	CLC4MD	CLC3MD	CLC2MD	CLC1MD	—	274
79Ch	—	Unimplemented								—
79Dh	—	Unimplemented								—
79Eh	—	Unimplemented								—
79Fh	—	Unimplemented								—
80Ch	WDTCON0	—	—	WDTPS<4:0>					SWDTEN	196
80Dh	WDTCON1	—	WDTCS<2:0>			—	WINDOW<2:0>			197
80Eh	WDTPSL	PSCNT								198
80Fh	WDTPSH	PSCNT								198
810h	WDTTMR	—	WDTTMR<3:0>				STATE	PSCNT17	PSCNT16	198
811h	BORCON	SBOREN	—	—	—	—	—	—	BORRDY	135
812h	VREGCON	—	—	—	—	—	—	VREGPM	—	189
813h	PCON0	STKOVF	STKUNF	$\overline{\text{WDTWV}}$	$\overline{\text{RWDT}}$	$\overline{\text{RMCLR}}$	$\overline{\text{RI}}$	$\overline{\text{POR}}$	$\overline{\text{BOR}}$	140
814h	PCON1	—	—	—	—	—	—	$\overline{\text{MEMV}}$	$\overline{\text{VBATBOR}}$	141
815h	—	Unimplemented								—
816h	—	Unimplemented								—
817h	—	Unimplemented								—
818h	—	Unimplemented								—
819h	—	Unimplemented								—
81Ah	NVMADRL	NVMADR7	NVMADR6	NVMADR5	NVMADR4	NVMADR3	NVMADR2	NVMADR1	NVMADR0	216
81Bh	NVMADRH	—	NVMADR14	NVMADR13	NVMADR12	NVMADR11	NVMADR10	NVMADR9	NVMADR8	216
81Ch	NVMDATL	NVMDAT7	NVMDAT6	NVMDAT5	NVMDAT4	NVMDAT3	NVMDAT2	NVMDAT1	NVMDAT0	216
81Dh	NVMDATH	—	—	NVMDAT13	NVMDAT12	NVMDAT11	NVMDAT10	NVMDAT9	NVMDAT8	216
81Eh	NVMCON1	—	NVMREGS	LWLO	FREE	WRERR	WREN	WR	RD	217
81Fh	NVMCON2	NVMCON2<7:0>								218
88Ch	CPUDOZE	IDLEN	DOZEN	ROI	DOE	—	DOZE2	DOZE1	DOZE0	190
88Dh	OSCCON1	—	NOSC<2:0>			NDIV<3:0>				152
88Eh	OSCCON2	—	COSC<2:0>			CDIV<3:0>				152
88Fh	OSCCON3	CSWHOLD	SOSCPWR	—	ORDY	NOSCR	—	—	—	154
890h	OSCSTAT	EXTOR	HFOR	MFOR	LFOR	SOR	ADOR	—	PLLR	155

Legend: x = unknown, u = unchanged, q = depends on condition, - = unimplemented, read as '0', r = reserved. Shaded locations unimplemented, read as '0'.

Note 1: Unimplemented data memory locations, read as '0'.

TABLE 38-1: REGISTER FILE SUMMARY FOR PIC16(L)F19155/56/75/76/85/86 DEVICES

Address	Name	Bit 7	Bit 6	Bit 5	Bit 4	Bit 3	Bit 2	Bit 1	Bit 0	Register on page
891h	OSCEN	EXTOEN	HFOEN	MFOEN	LFOEN	SOSCEN	ADOEN	—	—	156
892h	OSCTUNE	—	—	HFTUN<5:0>						157
893h	OSCFRQ	—	—	—	—	—	HFFRQ<2:0>			157
894h	ACTCON	ACTEN	ACTUD	—	—	ACTLOCK	—	ACTORS	—	158
895h	—	Unimplemented								—
896h	—	Unimplemented								—
897h	—	Unimplemented								—
898h	—	Unimplemented								—
899h	—	Unimplemented								—
89Ah	—	Unimplemented								—
89Bh	—	Unimplemented								—
89Ch	—	Unimplemented								—
89Dh	—	Unimplemented								—
89Eh	—	Unimplemented								—
89Fh	—	Unimplemented								—
90Ch	FVRCON	FVREN	FVRRDY	TSEN	TSRNG	CDAFVR<1:0>		ADFVR<1:0>		285
90Dh	—	Unimplemented								—
90Eh	DAC1CON0	EN	—	OE1	OE2	DAC1PSS<1:0>		—	—	333
90Fh	DAC1CON1	—	—	—	DAC1R<4:0>					333
90Fh		—	—	—	DAC1R4	DAC1R3	DAC1R2	DAC1R1	DAC1R0	333
910h	—	Unimplemented								—
911h	—	Unimplemented								—
912h	—	Unimplemented								—
913h	—	Unimplemented								—
914h	—	Unimplemented								—
915h	—	Unimplemented								—
916h	—	Unimplemented								—
917h	—	Unimplemented								—
918h	—	Unimplemented								—
919h	—	Unimplemented								—
91Ah	—	Unimplemented								—
91Bh	—	Unimplemented								—
91Ch	—	Unimplemented								—
91Dh	—	Unimplemented								—
91Eh	—	Unimplemented								—
91Fh	ZCDCON	ZCDSEN	—	ZCDOUT	ZCDPOL	—	—	ZCDINTP	ZCDINTN	350
98Ch	—	Unimplemented								—
98Dh	—	Unimplemented								—
98Eh	—	Unimplemented								—
98Fh	CMOUT	—	—	—	—	—	—	MC2OUT	MC1OUT	344
990h	CM1CON0	ON	OUT	—	POL	—	—	HYS	SYNC	341
991h	CM1CON1	—	—	—	—	—	—	INTP	INTN	342
992h	CM1NSEL	—	—	—	—	—	NCH<2:0>			343
992h		—	—	—	—	—	NCH2	NCH1	NCH0	343
993h	CM1PSEL	—	—	—	—	PCH<3:0>				343
993h		—	—	—	—	—	PCH2	PCH1	PCH0	343

Legend: x = unknown, u = unchanged, q = depends on condition, - = unimplemented, read as '0', r = reserved. Shaded locations unimplemented, read as '0'.

Note 1: Unimplemented data memory locations, read as '0'.

© 2017-2019 Microchip Technology Inc.

TABLE 38-1: REGISTER FILE SUMMARY FOR PIC16(L)F19155/56/75/76/85/86 DEVICES

Address	Name	Bit 7	Bit 6	Bit 5	Bit 4	Bit 3	Bit 2	Bit 1	Bit 0	Register on page
994h	CM2CON0	ON	OUT	—	POL	—	—	HYS	SYNC	341
995h	CM2CON1	—	—	—	—	—	—	INTP	INTN	342
996h	CM2NSEL	—	—	—	—	—	NCH<2:0>			343
996h		—	—	—	—	—	NCH2	NCH1	NCH0	343
997h	CM2PSEL	—	—	—	—	—	PCH<2:0>			343
997h		—	—	—	—	—	PCH2	PCH1	PCH0	343
998h	—	Unimplemented								—
999h	—	Unimplemented								—
99Ah	—	Unimplemented								—
99Bh	—	Unimplemented								—
99Ch	—	Unimplemented								—
99Dh	—	Unimplemented								—
99Eh	—	Unimplemented								—
99Fh	—	Unimplemented								—
A0Ch	—	Unimplemented								—
A0Dh	—	Unimplemented								—
A0Eh	—	Unimplemented								—
A0Fh	—	Unimplemented								—
A10h	—	Unimplemented								—
A11h	—	Unimplemented								—
A12h	—	Unimplemented								—
A13h	—	Unimplemented								—
A14h	—	Unimplemented								—
A15h	—	Unimplemented								—
A16h	—	Unimplemented								—
A17h	—	Unimplemented								—
A18h	—	Unimplemented								—
A19h	RC2REG	RC2REG								586
A1Ah	TX2REG	TX2REG								586
A1Bh	SP2BRGL	SP2BRGL								586
A1Ch	SP2BRGH	SP2BRGH								587
A1Dh	RC2STA	SPEN	RX9	SREN	CREN	ADDEN	FERR	OERR	RX9D	584
A1Eh	TX2STA	CSRC	TX9	TXEN	SYNC	SENDB	BRGH	TRMT	TX9D	583
A1Fh	BAUD2CON	ABDOVF	RCIDL	—	SCKP	BRG16	—	WUE	ABDEN	585
A8Ch — A9Fh	—	Unimplemented								—
B0Ch — B1Fh	—	Unimplemented								—
B8Ch — B9Fh	—	Unimplemented								—

Legend: x = unknown, u = unchanged, q = depends on condition, - = unimplemented, read as '0', r = reserved. Shaded locations unimplemented, read as '0'.

Note 1: Unimplemented data memory locations, read as '0'.

TABLE 38-1: REGISTER FILE SUMMARY FOR PIC16(L)F19155/56/75/76/85/86 DEVICES

Address	Name	Bit 7	Bit 6	Bit 5	Bit 4	Bit 3	Bit 2	Bit 1	Bit 0	Register on page
C0Ch	RTCCON	RTCEN	—	RTCWREN	RTCSYNC	HALFSEC	—	RTCCLKSEL<1:0>		358
C0Dh	RTCCAL	CAL								359
C0Eh	ALRMCON	ALRMEN	CHIME	AMASK<3:0>				—	—	362
C0Fh	ALRMRPT	ARPT								362
C10h	YEAR	YEARH<3:0>				YEARL<3:0>				359
C11h	MONTH	—	—	—	MONTHH	MONTHL<3:0>				359
C12h	WEEKDAY	—	—	—	—	—	WDAY<2:0>			360
C13h	DAY	—	—	DAYH<1:0>		DAYL<3:0>				360
C14h	HOURS	—	—	HRH<1:0>		HRL<3:0>				360
C15h	MINUTES	—	MINH<2:0>			MINL<3:0>				361
C16h	SECONDS	—	SECH<2:0>			SECL<3:0>				361
C17h	ALRMMTH	—	—	—	ALRMH-MONTH	ALRMLMONTH <3:0>				363
C18h	ALRMWD	—	—	—	—	—	ALRMLWDAY<2:0>			363
C19h	ALRMDAY	—	—	ALRMHDAY<1:0>		ALRMLDAY<3:0>				363
C1Ah	ALRMHR	—	—	ALRMHHR<1:0>		ALRMLHR<3:0>				364
C1Bh	ALRMMIN	—	ALRMHMIN<2:0>			ALRMLMIN<3:0>				364
C1Ch	ALRMSEC	—	ALRMHSEC<2:0>			ALRMLSEC<3:0>				364
C1Dh	—	Unimplemented								—
C1Eh	—	Unimplemented								—
C1Fh	—	Unimplemented								—
C8Ch	—	Unimplemented								—
C8Dh	—	Unimplemented								—
C8Eh	—	Unimplemented								—
C8Fh	—	Unimplemented								—
C90h	—	Unimplemented								—
C91h	—	Unimplemented								—
C92h	—	Unimplemented								—
C93h	—	Unimplemented								—
C94h	—	Unimplemented								—
C95h	—	Unimplemented								—
C96h	—	Unimplemented								—
C97h	—	Unimplemented								—
C98h	—	Unimplemented								—
C99h	—	Unimplemented								—
C9Ah	—	Unimplemented								—
C9Bh	—	Unimplemented								—
C9Ch	—	Unimplemented								—
C9Dh	—	Unimplemented								—
C9Eh	—	Unimplemented								—
C9Fh	—	Unimplemented								—
D0Ch — D1Fh	—	Unimplemented								—
D8Ch — D9Fh	—	Unimplemented								—

Legend: x = unknown, u = unchanged, q = depends on condition, - = unimplemented, read as '0', r = reserved. Shaded locations unimplemented, read as '0'.

Note 1: Unimplemented data memory locations, read as '0'.

© 2017-2019 Microchip Technology Inc.

TABLE 38-1: REGISTER FILE SUMMARY FOR PIC16(L)F19155/56/75/76/85/86 DEVICES

Address	Name	Bit 7	Bit 6	Bit 5	Bit 4	Bit 3	Bit 2	Bit 1	Bit 0	Register on page
E0Ch — E1Fh	—	Unimplemented								—
E8Ch	VB0GPR	VB0GPR								
E8Dh	VB1GPR	VB1GPR								
E8Eh	VB2GPR	VB2GPR								
E8Fh	VB3GPR	VB3GPR								
E90h	—	Unimplemented								—
E91h	—	Unimplemented								—
E92h	—	Unimplemented								—
E93h	—	Unimplemented								—
E94h	—	Unimplemented								—
E95h	—	Unimplemented								—
E96h	—	Unimplemented								—
E97h	—	Unimplemented								—
E98h	—	Unimplemented								—
E99h	—	Unimplemented								—
E9Ah	—	Unimplemented								—
E9Bh	—	Unimplemented								—
E9Ch	—	Unimplemented								—
E9Dh	—	Unimplemented								—
E9Eh	—	Unimplemented								—
E9Fh	—	Unimplemented								—
F0Ch — 1C9Fh	—	Unimplemented								—
1D0Ch	LCDCON	LCDEN	SLPEN	WERR	CS	LMUX<3:0>				619
1D0Dh	LCDPS	WFT	—	LCDA	WA	LP<3:0>				620
1D0Eh	LCDSE0	SE07	SE06	SE05	SE04	SE03	SE02	SE01	SE00	621
1D0Fh	LCDSE1	SE15	SE14	SE13	SE12	SE11	SE10	SE09	SE08	621
1D10h	LCDSE2	SE23	SE22	SE21	SE20	SE19	SE18	SE17	SE16	621
1D11h	LCDSE3	SE31	SE30	SE29	SE28	SE27	SE26	SE25	SE24	621
1D12h	LCDSE4	SE39	SE38	SE37	SE36	SE35	SE34	SE33	SE32	621
1D13h	LCDSE5	SE47	SE46	SE45	SE44	SE43	SE42	SE41	SE40	621
1D14h	LCDVCON1	LPEN	EN5V	—	—	—	BIAS<2:0>			622
1D15h	LCDVCON2	—	—	—	—	LCDVSRC3	LCDVSRC2	LCDVSRC1	LCDVSRC0	623
1D16h	LCDREF	—	—	—	—	—	LCDCST<2:0>			625
1D17h	LCDRL	LRLAP<1:0>		LRLBP<1:0>		LCDIRI	LRLAT<2:0>			624
1D18h	LCDDATA0	S07C0	S06C0	S05C0	S04C0	S03C0	S02C0	S01C0	S00C0	621
1D19h	LCDDATA1	S15C0	S14C0	S13C0	S12C0	S11C0	S10C0	S09C0	S08C0	621
1D1Ah	LCDDATA2	S23C0	S22C0	S21C0	S20C0	S19C0	S18C0	S17C0	S16C0	621
1D1Bh	LCDDATA3	S31C0	S30C0	S29C0	S28C0	S27C0	S26C0	S25C0	S24C0	621
1D1Ch	LCDDATA4	S39C0	S38C0	S37C0	S36C0	S35C0	S34C0	S33C0	S32C0	621
1D1Dh	LCDDATA5	—	—	S45C0	S44C0	S43C0	S42C0	S41C0	S40C0	621
1D1Eh	LCDDATA6	S07C1	S06C1	S05C1	S04C1	S03C1	S02C1	S01C1	S00C1	621
1D1Fh	LCDDATA7	S15C1	S14C1	S13C1	S12C1	S11C1	S10C1	S09C1	S08C1	621

Legend: x = unknown, u = unchanged, q = depends on condition, - = unimplemented, read as '0', r = reserved. Shaded locations unimplemented, read as '0'.

Note 1: Unimplemented data memory locations, read as '0'.

TABLE 38-1: REGISTER FILE SUMMARY FOR PIC16(L)F19155/56/75/76/85/86 DEVICES

Address	Name	Bit 7	Bit 6	Bit 5	Bit 4	Bit 3	Bit 2	Bit 1	Bit 0	Register on page
1D20h	LCDDATA8	S23C1	S22C1	—	S20C1	S19C1	S18C1	—	—	621
1D21h	LCDDATA9	S31C1	S30C1	S29C1	S28C1	S27C1	S26C1	S25C1	S24C1	621
1D22h	LCDDATA10	—	—	—	—	—	S34C1	S33C1	S32C1	621
1D23h	LCDDATA11	S47C1	S46C1	S45C1	S44C1	S43C1	S42C1	S41C1	S40C1	621
1D24h	LCDDATA12	S07C2	S06C2	—	S04C2	S3C2	S2C2	S01C2	S00C2	621
1D25h	LCDDATA13	S15C2	S14C2	S13C2	—	S11C2	S10C2	S09C2	S08C2	621
1D26h	LCDDATA14	S23C2	S22C2	—	S20C2	S19C2	S18C2	—	—	621
1D27h	LCDDATA15	S31C2	S30C2	S29C2	S28C2	S27C2	S26C2	S25C2	S24C2	621
1D28h	LCDDATA16	—	—	—	—	—	S34C2	S33C2	S32C2	621
1D29h	LCDDATA17	S47C2	S46C2	S45C2	S44C2	S43C2	S42C2	S41C2	S40C2	621
1D2Ah	LCDDATA18	S15C3	S14C3	S13C3	—	SE11C3	S10C3	S09C3	S08C3	621
1D2Bh	LCDDATA19	S23C3	S22C3	—	S20C3	S19C3	S18C3	—	—	621
1D2Ch	LCDDATA20	S31C3	S30C3	S29C3	S28C3	S27C3	S26C3	S25C3	S24C3	621
1D2Dh	LCDDATA21	—	—	—	—	—	S34C3	S33C3	S32C3	621
1D2Eh	LCDDATA22	S47C3	S46C3	S45C3	S44C3	S43C3	S42C3	S41C3	S40C3	621
1D2Fh	LCDDATA23	S07C4	S06C4	—	S04C4	S03C4	S02C4	S01C4	S00C4	621
1D30h	LCDDATA24	S15C4	S14C4	S13C4	—	S11C4	S10C4	S09C4	S08C4	621
1D31h	LCDDATA25	S23C4	S22C4	—	S20C4	S19C4	S18C4	—	—	621
1D32h	LCDDATA26	S31C4	S30C4	S29C4	S28C4	S27C4	S26C4	S25C4	S24C4	621
1D33h	LCDDATA27	—	—	—	—	—	S34C4	S33C4	S32C4	621
1D34h	LCDDATA28	S47C4	S46C4	S45C4	S44C4	S43C4	S42C4	S41C4	S40C4	621
1D35h	LCDDATA29	S07C5	S06C5	—	S04C5	S03C5	S02C5	S01C5	S00C5	621
1D36h	LCDDATA30	S15C5	S14C5	S13C5	—	S11C5	S10C5	S09C5	S08C5	621
1D37h	LCDDATA31	S23C5	S22C5	—	S20C5	S19C5	S18C5	—	—	621
1D38h	LCDDATA32	S31C5	S30C5	S29C5	S28C5	S27C5	S26C5	S25C5	S24C5	621
1D39h	LCDDATA33	—	—	—	—	—	S34C5	S33C5	S32C5	621
1D3Ah	LCDDATA34	S47C5	S46C5	S45C5	S44C5	S43C5	S42C5	S41C5	S40C5	621
1D3Bh	LCDDATA35	S07C6	S06C6	—	S04C6	S03C6	S02C6	S01C6	S00C6	621
1D3Ch	LCDDATA36	S15C6	S14C6	S13C6	—	S11C6	S10C6	S09C6	S08C6	621
1D3Dh	LCDDATA37	S23C6	S22C6	—	S20C6	S19C6	S18C6	—	—	621
1D3Eh	LCDDATA38	S31C6	S30C6	S29C6	S28C6	S27C6	S26C6	S25C6	S24C6	621
1D3Fh	LCDDATA39	—	—	—	—	—	S34C6	S33C6	S32C6	621
1D40h	LCDDATA40	S47C6	S46C6	S45C6	S44C6	S43C6	S42C6	S41C6	S40C6	621
1D41h	LCDDATA41	S07C7	S06C7	—	S04C7	S03C7	S02C7	S01C7	S00C7	621
1D42h	LCDDATA42	S15C7	S14C7	S13C7	—	S11C7	S10C7	S09C7	S08C7	621
1D43h	LCDDATA43	S23C7	S22C7	—	S20C7	S19C7	S18C7	—	—	621
1D44h	LCDDATA44	S31C7	S30C7	S29C7	S28C7	S27C7	S26C7	S25C7	S24C7	621
1D45h	LCDDATA45	—	—	—	—	—	S34C7	S33C7	S32C7	621
1D46h	LCDDATA46	S47C7	S46C7	S45C7	S44C7	S43C7	S42C7	S41C7	S40C7	621
1D47h	LCDDATA47	S07C0	S06C0	—	S04COM0	S03C0	S02C0	S01C0	S00C0	621
1D48h — 1D6Fh	—	Unimplemented								—

Legend: x = unknown, u = unchanged, q = depends on condition, - = unimplemented, read as '0', r = reserved. Shaded locations unimplemented, read as '0'.

Note 1: Unimplemented data memory locations, read as '0'.

© 2017-2019 Microchip Technology Inc.

TABLE 38-1: REGISTER FILE SUMMARY FOR PIC16(L)F19155/56/75/76/85/86 DEVICES

Address	Name	Bit 7	Bit 6	Bit 5	Bit 4	Bit 3	Bit 2	Bit 1	Bit 0	Register on page
1D8Ch — 1D9Fh	—	Unimplemented								—
1E0Ch	—	Unimplemented								—
1E0Dh	—	Unimplemented								—
1E0Eh	—	Unimplemented								—
1E0Fh	CLCDATA	—	—	—	—	MLC4OUT	MLC3OUT	MLC2OUT	MLC1OUT	510
1E10h	CLC1CON	LC1EN	—	LC1OUT	LC1INTP	LC1INTN	LC1MODE<2:0>			502
1E11h	CLC1POL	LC1POL	—	—	—	LC1G4POL	LC1G3POL	LC1G2POL	LC1G1POL	503
1E12h	CLC1SEL0	—	—	LC1D1S<5:0>						504
1E13h	CLC1SEL1	—	—	LC1D2S<5:0>						504
1E14h	CLC1SEL2	—	—	LC1D3S<5:0>						504
1E15h	CLC1SEL3	—	—	LC1D4S<5:0>						504
1E16h	CLC1GLS0	LC1G1D4T	LC1G1D4N	LC1G1D3T	LC1G1D3N	LC1G1D2T	LC1G1D2N	LC1G1D1T	LC1G1D1N	506
1E17h	CLC1GLS1	LC1G2D4T	LC1G2D4N	LC1G2D3T	LC1G2D3N	LC1G2D2T	LC1G2D2N	LC1G2D1T	LC1G2D1N	504
1E18h	CLC1GLS2	LC1G3D4T	LC1G3D4N	LC1G3D3T	LC1G3D3N	LC1G3D2T	LC1G3D2N	LC1G3D1T	LC1G3D1N	508
1E19h	CLC1GLS3	LC1G4D4T	LC1G4D4N	LC1G4D3T	LC1G4D3N	LC1G4D2T	LC1G4D2N	LC1G4D1T	LC1G4D1N	509
1E1Ah	CLC2CON	LC2EN	—	LC2OUT	LC2INTP	LC2INTN	LC2MODE<2:0>			502
1E1Bh	CLC2POL	LC2POL	—	—	—	LC2G4POL	LC2G3POL	LC2G2POL	LC2G1POL	503
1E1Ch	CLC2SEL0	—	—	LC2D1S<5:0>						504
1E1Dh	CLC2SEL1	—	—	LC2D2S<5:0>						504
1E1Eh	CLC2SEL2	—	—	LC2D3S<5:0>						504
1E1Fh	CLC2SEL3	—	—	LC2D4S<5:0>						505
1E20h	CLC2GLS0	LC2G1D4T	LC1G1D4N	LC2G1D3T	LC2G1D3N	LC2G1D2T	LC2G1D2N	LC2G1D1T	LC2G1D1N	506
1E21h	CLC2GLS1	LC2G2D4T	LC1G2D4N	LC2G2D3T	LC2G2D3N	LC2G2D2T	LC2G2D2N	LC2G2D1T	LC2G2D1N	507
1E22h	CLC2GLS2	LC2G3D4T	LC1G3D4N	LC2G3D3T	LC2G3D3N	LC2G3D2T	LC2G3D2N	LC2G3D1T	LC2G3D1N	508
1E23h	CLC2GLS3	LC2G4D4T	LC1G4D4N	LC2G4D3T	LC2G4D3N	LC2G4D2T	LC2G4D2N	LC2G4D1T	LC2G4D1N	509
1E24h	CLC3CON	LC3EN	—	LC3OUT	LC3INTP	LC3INTN	LC3MODE<2:0>			502
1E25h	CLC3POL	LC3POL	—	—	—	LC3G4POL	LC3G3POL	LC3G2POL	LC3G1POL	503
1E26h	CLC3SEL0	—	—	LC3D1S						504
1E27h	CLC3SEL1	—	—	LC3D2S						504
1E28h	CLC3SEL2	—	—	LC3D3S						504
1E29h	CLC3SEL3	—	—	LC3D4S						504
1E2Ah	CLC3GLS0	LC3G1D4T	LC3G1D4N	LC3G1D3T	LC3G1D3N	LC3G1D2T	LC3G1D2N	LC3G1D1T	LC3G1D1N	506
1E2Bh	CLC3GLS1	LC3G2D4T	LC3G2D4N	LC3G2D3T	LC3G2D3N	LC3G2D2T	LC3G2D2N	LC3G2D1T	LC3G2D1N	507
1E2Ch	CLC3GLS2	LC3G3D4T	LC3G3D4N	LC3G3D3T	LC3G3D3N	LC3G3D2T	LC3G3D2N	LC3G3D1T	LC3G3D1N	508
1E2Dh	CLC3GLS3	LC3G4D4T	LC3G4D4N	LC3G4D3T	LC3G4D3N	LC3G4D2T	LC3G4D2N	LC3G4D1T	LC3G4D1N	509
1E2Eh	CLC4CON	LC4EN	—	LC4OUT	LC4INTP	LC4INTN	LC4MODE<2:0>			502
1E2Fh	CLC4POL	LC4POL	—	—	—	LC4G4POL	LC4G3POL	LC4G2POL	LC4G1POL	503
1E30h	CLC4SEL0	—	—	LC4D1S<5:0>						504
1E31h	CLC4SEL1	—	—	LC4D2S<5:0>						504
1E32h	CLC4SEL2	—	—	LC4D3S<5:0>						504
1E33h	CLC4SEL3	—	—	LC4D4S<5:0>						504
1E34h	CLC4GLS0	LC4G1D4T	LC4G1D4N	LC4G1D3T	LC4G1D3N	LC4G1D2T	LC4G1D2N	LC4G1D1T	LC4G1D1N	506
1E35h	CLC4GLS1	LC4G2D4T	LC4G2D4N	LC4G2D3T	LC4G2D3N	LC4G2D2T	LC4G2D2N	LC4G2D1T	LC4G2D1N	507

Legend: x = unknown, u = unchanged, q = depends on condition, - = unimplemented, read as '0', r = reserved. Shaded locations unimplemented, read as '0'.

Note 1: Unimplemented data memory locations, read as '0'.

TABLE 38-1: REGISTER FILE SUMMARY FOR PIC16(L)F19155/56/75/76/85/86 DEVICES

Address	Name	Bit 7	Bit 6	Bit 5	Bit 4	Bit 3	Bit 2	Bit 1	Bit 0	Register on page
1E36h	CLC4GLS2	LC4G3D4T	LC4G3D4N	LC4G3D3T	LC4G3D3N	LC4G3D2T	LC4G3D2N	LC4G3D1T	LC4G3D1N	508
1E37h	CLC4GLS3	LC4G4D4T	LC4G4D4N	LC4G4D3T	LC4G4D3N	LC4G4D2T	LC4G4D2N	LC4G4D1T	LC4G4D1N	509
1E38h	RF0PPS(3)	—	—	—	RF0PPS4	RF0PPS3	RF0PPS2	RF0PPS1	RF0PPS0	265
1E39h	RF1PPS(3)	—	—	—	RF1PPS4	RF1PPS3	RF1PPS2	RF1PPS1	RF1PPS0	265
1E3Ah	RF2PPS(3)	—	—	—	RF2PPS4	RF2PPS3	RF2PPS2	RF2PPS1	RF2PPS0	265
1E3Bh	RF3PPS(3)	—	—	—	RF3PPS4	RF3PPS3	RF3PPS2	RF3PPS1	RF3PPS0	265
1E3Ch	RF4PPS(3)	—	—	—	RF4PPS4	RF4PPS3	RF4PPS2	RF4PPS1	RF4PPS0	265
1E3Dh	RF5PPS(3)	—	—	—	RF5PPS4	RF5PPS3	RF5PPS2	RF5PPS1	RF5PPS0	265
1E3Eh	RF6PPS(3)	—	—	—	RF6PPS4	RF6PPS3	RF6PPS2	RF6PPS1	RF6PPS0	265
1E3Fh	RF7PPS(3)	—	—	—	RF7PPS4	RF7PPS3	RF7PPS2	RF7PPS1	RF7PPS0	265
1E40h	—	Unimplemented								—
1E41h	—	Unimplemented								—
1E42h	—	Unimplemented								—
1E43h	—	Unimplemented								—
1E44h	—	Unimplemented								—
1E45h	—	Unimplemented								—
1E46h	—	Unimplemented								—
1E47h	—	Unimplemented								—
1E48h	—	Unimplemented								—
1E49h	—	Unimplemented								—
1E4Ah	—	Unimplemented								—
1E4Bh	—	Unimplemented								—
1E4Ch	—	Unimplemented								—
1E4Dh	—	Unimplemented								—
1E4Eh	—	Unimplemented								—
1E4Fh	—	Unimplemented								—
1E50h	ANSELF(3)	ANSF7	ANSF6	ANSF5	ANSF4	ANSF3	ANSF2	ANSF1	ANSF0	256
1E51h	WPUF(3)	WPUF7	WPUF6	WPUF5	WPUF4	WPUF3	WPUF2	WPUF1	WPUF0	256
1E52h	ODCONF(3)	ODCF7	ODCF6	ODCF5	ODCF4	ODCF3	ODCF2	ODCF1	ODCF0	257
1E53h	SLRCONF(3)	SLRF7	SLRF6	SLRF5	SLRF4	SLRF3	SLRF2	SLRF1	SLRF0	257
1E54h	INLVLF(3)	INLVLF7	INLVLF6	INLVLF5	INLVLF4	INLVLF3	INLVLF2	INLVLF1	INLVLF0	257
1E55h	—	Unimplemented								—
1E56h	—	Unimplemented								—
1E57h	—	Unimplemented								—
1E58h	—	Unimplemented								—
1E59h	—	Unimplemented								—
1E5Ah	—	Unimplemented								—
1E5Bh	—	Unimplemented								—
1E5Ch	—	Unimplemented								—
1E5Dh	—	Unimplemented								—

Legend: x = unknown, u = unchanged, q = depends on condition, - = unimplemented, read as '0', r = reserved. Shaded locations unimplemented, read as '0'.

Note 1: Unimplemented data memory locations, read as '0'.
2: Present only on PIC16(L)F19175/76/85/86.
3: Present only on PIC16(L)F19185/86.

© 2017-2019 Microchip Technology Inc.

TABLE 38-1: REGISTER FILE SUMMARY FOR PIC16(L)F19155/56/75/76/85/86 DEVICES

Address	Name	Bit 7	Bit 6	Bit 5	Bit 4	Bit 3	Bit 2	Bit 1	Bit 0	Register on page
1E5Eh	—	Unimplemented								—
1E5Fh	—	Unimplemented								—
1E60h	—	Unimplemented								—
1E61h	—	Unimplemented								—
1E62h	—	Unimplemented								—
1E63h	—	Unimplemented								—
1E64h	—	Unimplemented								—
1E65h	—	Unimplemented								—
1E66h	—	Unimplemented								—
1E67h	—	Unimplemented								—
1E68h	—	Unimplemented								—
1E69h	—	Unimplemented								—
1E6Ah	—	Unimplemented								—
1E6Bh	—	Unimplemented								—
1E6Ch	—	Unimplemented								—
1E6Dh	—	Unimplemented								—
1E6Eh	—	Unimplemented								—
1E6Fh	—	Unimplemented								—
1E8Ch	—	Unimplemented								—
1E8Dh	—	Unimplemented								—
1E8Eh	—	Unimplemented								—
1E8Fh	PPSLOCK	—	—	—	—	—	—	—	PPSLOCKED	265
1E90h	INTPPS	—	—	—	INTPPS<4:0>					264
1E91h	T0CKIPPS	—	—	—	T0CKIPPS<4:0>					264
1E92h	T1CKIPPS	—	—	—	T1CKIPPS<4:0>					264
1E93h	T1GPPS	—	—	—	T1GPPS<4:0>					264
1E94h	—	Unimplemented								—

Legend: x = unknown, u = unchanged, q = depends on condition, - = unimplemented, read as '0', r = reserved. Shaded locations unimplemented, read as '0'.

Note 1: Unimplemented data memory locations, read as '0'.

TABLE 38-1: REGISTER FILE SUMMARY FOR PIC16(L)F19155/56/75/76/85/86 DEVICES

Address	Name	Bit 7	Bit 6	Bit 5	Bit 4	Bit 3	Bit 2	Bit 1	Bit 0	Register on page
1E95h	—	Unimplemented								—
1E96h	—	Unimplemented								—
1E97h	—	Unimplemented								—
1E98h	—	Unimplemented								—
1E99h	—	Unimplemented								—
1E9Ah	—	Unimplemented								—
1E9Bh	—	Unimplemented								—
1E9Ch	T2AINPPS	—	—	—	T2INPPS<4:0>					264
1E9Dh	T4AINPPS	—	—	—	T4INPPS<4:0>					264
1E9Eh	—	Unimplemented								—
1E9Fh	—	Unimplemented								—
1EA0h	—	Unimplemented								—
1EA1h	CCP1PPS	—	—	—	CCP1PPS<4:0>					264
1EA2h	CCP2PPS	—	—	—	CCP2PPS<4:0>					264
1EA3h	—	Unimplemented								—
1EA4h	—	Unimplemented								—
1EA5h	—	Unimplemented								—
1EA6h	—	Unimplemented								—
1EA7h	—	Unimplemented								—
1EA8h	—	Unimplemented								—
1EA9h	SMT1WINPPS	—	—	—	SMT1WINPPS<4:0>					264
1EAAh	SMT1SIGPPS	—	—	—	SMT1SIGPPS<4:0>					264
1EABh	—	Unimplemented								—
1EACh	—	Unimplemented								—
1EADh	—	Unimplemented								—
1EAEh	—	Unimplemented								—
1EAFh	—	Unimplemented								—
1EB0h	—	Unimplemented								—
1EB1h	CWG1PPS	—	—	—	CWG1PPS<4:0>					264
1EB2h	—	Unimplemented								—
1EB3h	—	Unimplemented								—
1EB4h	—	Unimplemented								—
1EB5h	—	Unimplemented								—
1EB6h	—	Unimplemented								—
1EB7h	—	Unimplemented								—
1EB8h	—	Unimplemented								—
1EB9h	—	Unimplemented								—
1EBAh	—	Unimplemented								—
1EBBh	CLCIN0PPS	—	—	—	CLCIN0PPS<4:0>					264
1EBCh	CLCIN1PPS	—	—	—	CLCIN1PPS<4:0>					264
1EBDh	CLCIN2PPS	—	—	—	CLCIN2PPS<4:0>					264

Legend: x = unknown, u = unchanged, q = depends on condition, - = unimplemented, read as '0', r = reserved. Shaded locations unimplemented, read as '0'.

Note 1: Unimplemented data memory locations, read as '0'.

© 2017-2019 Microchip Technology Inc.

TABLE 38-1: REGISTER FILE SUMMARY FOR PIC16(L)F19155/56/75/76/85/86 DEVICES

Address	Name	Bit 7	Bit 6	Bit 5	Bit 4	Bit 3	Bit 2	Bit 1	Bit 0	Register on page
1EBEh	CLCIN3PPS	—	—	—	CLCIN3PPS<4:0>					264
1EBFh	—	Unimplemented								—
1EC0h	—	Unimplemented								—
1EC1h	—	Unimplemented								—
1EC2h	—	Unimplemented								—
1EC3h	ADCACTPPS	—	—	ADCACTPPS<5:0>						264
1EC4h	—	Unimplemented								—
1EC5h	SSP1CLKPPS	—	—	—	SSP1CLKPPS<4:0>					264
1EC6h	SSP1DATPPS	—	—	—	SSP1DATPPS<4:0>					264
1EC7h	SSP1SSPPS	—	—	—	SSP1SSPPS<4:0>					264
1EC8h	—	Unimplemented								—
1EC9h	—	Unimplemented								—
1ECAh	—	Unimplemented								—
1ECBh	RX1PPS	—	—	—	RX1PPS<4:0>					264
1ECCh	TX1PPS	—	—	—	TX1PPS<4:0>					264
1ECDh	RX2PPS	—	—	—	RX2PPS<4:0>					264
1ECEh	TX2PPS	—	—	—	TX2PPS<4:0>					264
1ECFh	—	Unimplemented								—
1ED0h	—	Unimplemented								—
1ED1h	—	Unimplemented								—
1ED2h	—	Unimplemented								—
1ED3h	—	Unimplemented								—
1ED4h	—	Unimplemented								—
1ED5h	—	Unimplemented								—
1ED6h	—	Unimplemented								—
1ED7h	—	Unimplemented								—
1ED8h	—	Unimplemented								—
1ED9h	—	Unimplemented								—
1EDAh	—	Unimplemented								—
1EDBh	—	Unimplemented								—
1EDCh	—	Unimplemented								—
1EDDh	—	Unimplemented								—
1EDEh	—	Unimplemented								—
1EDFh	—	Unimplemented								—
1EE0h	—	Unimplemented								—
1EE1h	—	Unimplemented								—
1EE2h	—	Unimplemented								—
1EE3h	—	Unimplemented								—
1EE4h	—	Unimplemented								—
1EE5h	—	Unimplemented								—
1EE6h	—	Unimplemented								—
1EE7h	—	Unimplemented								—
1EE8h	—	Unimplemented								—
1EE9h	—	Unimplemented								—
1EEAh	—	Unimplemented								—

Legend: x = unknown, u = unchanged, q = depends on condition, - = unimplemented, read as '0', r = reserved. Shaded locations unimplemented, read as '0'.

Note 1: Unimplemented data memory locations, read as '0'.

TABLE 38-1: REGISTER FILE SUMMARY FOR PIC16(L)F19155/56/75/76/85/86 DEVICES

Address	Name	Bit 7	Bit 6	Bit 5	Bit 4	Bit 3	Bit 2	Bit 1	Bit 0	Register on page
1EEBh	—	Unimplemented								—
1EECh	—	Unimplemented								—
1EEDh	—	Unimplemented								—
1EEEh	—	Unimplemented								—
1EEFh	—	Unimplemented								—
1F0Ch	—	Unimplemented								—
1F0Dh	—	Unimplemented								—
1F0Eh	—	Unimplemented								—
1F0Fh	—	Unimplemented								—
1F10h	RA0PPS	—	—	—	RA0PPS4	RA0PPS3	RA0PPS2	RA0PPS1	RA0PPS0	265
1F11h	RA1PPS	—	—	—	RA1PPS4	RA1PPS3	RA1PPS2	RA1PPS1	RA1PPS0	265
1F12h	RA2PPS	—	—	—	RA2PPS4	RA2PPS3	RA2PPS2	RA2PPS1	RA2PPS0	265
1F13h	RA3PPS	—	—	—	RA3PPS4	RA3PPS3	RA3PPS2	RA3PPS1	RA3PPS0	265
1F14h	RA4PPS	—	—	—	RA4PPS4	RA4PPS3	RA4PPS2	RA4PPS1	RA4PPS0	265
1F15h	RA5PPS	—	—	—	RA5PPS4	RA5PPS3	RA5PPS2	RA5PPS1	RA5PPS0	265
1F16h	RA6PPS	—	—	—	RA6PPS4	RA6PPS3	RA6PPS2	RA6PPS1	RA6PPS0	265
1F17h	RA7PPS	—	—	—	RA7PPS4	RA7PPS3	RA7PPS2	RA7PPS1	RA7PPS0	265
1F18h	RB0PPS	—	—	—	RB0PPS4	RB0PPS3	RB0PPS2	RB0PPS1	RB0PPS0	265
1F19h	RB1PPS	—	—	—	RB1PPS4	RB1PPS3	RB1PPS2	RB1PPS1	RB1PPS0	265
1F1Ah	RB2PPS	—	—	—	RB2PPS4	RB2PPS3	RB2PPS2	RB2PPS1	RB2PPS0	265
1F1Bh	RB3PPS	—	—	—	RB3PPS4	RB3PPS3	RB3PPS2	RB3PPS1	RB3PPS0	265
1F1Ch	RB4PPS	—	—	—	RB4PPS4	RB4PPS3	RB4PPS2	RB4PPS1	RB4PPS0	265
1F1Dh	RB5PPS	—	—	—	RB5PPS4	RB5PPS3	RB5PPS2	RB5PPS1	RB5PPS0	265
1F1Eh	RB6PPS	—	—	—	RB6PPS4	RB6PPS3	RB6PPS2	RB6PPS1	RB6PPS0	265
1F1Fh	RB7PPS	—	—	—	RB7PPS4	RB7PPS3	RB7PPS2	RB7PPS1	RB7PPS0	265
1F20h	RC0PPS	—	—	—	RC0PPS4	RC0PPS3	RC0PPS2	RC0PPS1	RC0PPS0	265
1F21h	RC1PPS	—	—	—	RC1PPS4	RC1PPS3	RC1PPS2	RC1PPS1	RC1PPS0	265
1F22h	RC2PPS	—	—	—	RC2PPS4	RC2PPS3	RC2PPS2	RC2PPS1	RC2PPS0	265
1F23h	RC3PPS	—	—	—	RC3PPS4	RC3PPS3	RC3PPS2	RC3PPS1	RC3PPS0	265
1F24h	RC4PPS	—	—	—	RC4PPS4	RC4PPS3	RC4PPS2	RC4PPS1	RC4PPS0	265
1F25h	—	Unimplemented								—
1F26h	RC6PPS	—	—	—	RC6PPS4	RC6PPS3	RC6PPS2	RC6PPS1	RC6PPS0	265
1F27h	RC7PPS	—	—	—	RC7PPS4	RC7PPS3	RC7PPS2	RC7PPS1	RC7PPS0	265
1F28h	RD0PPS(2)	—	—	—	RD0PPS4	RD0PPS3	RD0PPS2	RD0PPS1	RD0PPS0	265
1F29h	RD1PPS(2)	—	—	—	RD1PPS4	RD1PPS3	RD1PPS2	RD1PPS1	RD1PPS0	265
1F2Ah	RD2PPS(2)	—	—	—	RD2PPS4	RD2PPS3	RD2PPS2	RD2PPS1	RD2PPS0	265
1F2Bh	RD3PPS(2)	—	—	—	RD3PPS4	RD3PPS3	RD3PPS2	RD3PPS1	RD3PPS0	265
1F2Ch	RD4PPS(2)	—	—	—	RD4PPS4	RD4PPS3	RD4PPS2	RD4PPS1	RD4PPS0	265
1F2Dh	RD5PPS(2)	—	—	—	RD5PPS4	RD5PPS3	RD5PPS2	RD5PPS1	RD5PPS0	265
1F2Eh	RD6PPS(2)	—	—	—	RD6PPS4	RD6PPS3	RD6PPS2	RD6PPS1	RD6PPS0	265
1F2Fh	RD7PPS(2)	—	—	—	RD7PPS4	RD7PPS3	RD7PPS2	RD7PPS1	RD7PPS0	265
1F30h	RE0PPS(2)	—	—	—	RE0PPS4	RE0PPS3	RE0PPS2	RE0PPS1	RE0PPS0	265
1F31h	RE1PPS(2)	—	—	—	RE1PPS4	RE1PPS3	RE1PPS2	RE1PPS1	RE1PPS0	265
1F32h	RE2PPS(2)	—	—	—	RE2PPS4	RE2PPS3	RE2PPS2	RE2PPS1	RE2PPS0	265

Legend: x = unknown, u = unchanged, q = depends on condition, - = unimplemented, read as '0', r = reserved. Shaded locations unimplemented, read as '0'.

Note 1: Unimplemented data memory locations, read as '0'.
2: Present only on PIC16(L)F19175/76/85/86.
3: Present only on PIC16(L)F19185/86.

© 2017-2019 Microchip Technology Inc.

TABLE 38-1: REGISTER FILE SUMMARY FOR PIC16(L)F19155/56/75/76/85/86 DEVICES

Address	Name	Bit 7	Bit 6	Bit 5	Bit 4	Bit 3	Bit 2	Bit 1	Bit 0	Register on page
1F33h	—	Unimplemented								—
1F34h	—	Unimplemented								—
1F35h	—	Unimplemented								—
1F36h	—	Unimplemented								—
1F37h	—	Unimplemented								—
1F38h	ANSELA	ANSA7	ANSA6	—	ANSA4	ANSA3	ANSA2	ANSA1	ANSA0	223
1F39h	WPUA	WPUA7	WPUA6	WPUA5	WPUA4	WPUA3	WPUA2	WPUA1	WPUA0	224
1F3Ah	ODCONA	ODCA7	ODCA6	—	ODCA4	ODCA3	ODCA2	ODCA1	ODCA0	224
1F3Bh	SLRCONA	SLRA7	SLRA6	—	SLRA4	SLRA3	SLRA2	SLRA1	SLRA0	225
1F3Ch	INLVLA	INLVLA7	INLVLA6	INLVLA5	INLVLA4	INLVLA3	INLVLA2	INLVLA1	INLVLA0	225
1F3Dh	IOCAP	IOCAP7	IOCAP6	IOCAP5	IOCAP4	IOCAP3	IOCAP2	IOCAP1	IOCAP0	
1F3Eh	IOCAN	IOCAN7	IOCAN6	IOCAN5	IOCAN4	IOCAN3	IOCAN2	IOCAN1	IOCAN0	
1F3Fh	IOCAF	IOCAF7	IOCAF6	IOCAF5	IOCAF4	IOCAF3	IOCAF2	IOCAF1	IOCAF0	
1F40h	—	Unimplemented								—
1F41h	—	Unimplemented								—
1F42h	—	Unimplemented								—
1F43h	ANSELB	ANSB7	ANSB6	ANSB5	ANSB4	ANSB3	ANSB2	ANSB1	ANSB0	230
1F44h	WPUB	WPUB7	WPUB6	WPUB5	WPUB4	WPUB3	WPUB2	WPUB1	WPUB0	231
1F45h	ODCONB	ODCB7	ODCB6	ODCB5	ODCB4	ODCB3	ODCB2	ODCB1	ODCB0	231
1F46h	SLRCONB	SLRB7	SLRB6	SLRB5	SLRB4	SLRB3	SLRB2	SLRB1	SLRB0	232
1F47h	INLVLB	INLVLB7	INLVLB6	INLVLB5	INLVLB4	INLVLB3	INLVLB2	INLVLB1	INLVLB0	232
1F48h	IOCBP	IOCBP7	IOCBP6	IOCBP5	IOCBP4	IOCBP3	IOCBP2	IOCBP1	IOCBP0	277
1F49h	IOCBN	IOCBN7	IOCBN6	IOCBN5	IOCBN4	IOCBN3	IOCBN2	IOCBN1	IOCBN0	277
1F4Ah	IOCBF	IOCBF7	IOCBF6	IOCBF5	IOCBF4	IOCBF3	IOCBF2	IOCBF1	IOCBF0	277
1F4Bh	—	Unimplemented								—
1F4Ch	—	Unimplemented								—
1F4Dh	—	Unimplemented								—
1F4Eh	—	Unimplemented								—
1F4Fh	WPUC	WPUC7	WPUC6	—	WPUC4	WPUC3	WPUC2	WPUC1	WPUC0	236
1F50h	ODCONC	ODCC7	ODCC6	—	ODCC4	ODCC3	ODCC2	ODCC1	ODCC0	237
1F51h	SLRCONC	SLRC7	SLRC6	—	SLRC4	SLRC3	SLRC2	SLRC1	SLRC0	237
1F52h	INLVLC	INLVLC7	INLVLC6	—	INLVLC4	INLVLC3	INLVLC2	INLVLC1	INLVLC0	238
1F53h	IOCCP	IOCCP7	IOCCP6	—	IOCCP4	IOCCP3	IOCCP2	IOCCP1	IOCCP0	278
1F54h	IOCCN	IOCCN7	IOCCN6	—	IOCCN4	IOCCN3	IOCCN2	IOCCN1	IOCCN0	278
1F55h	IOCCF	IOCCF7	IOCCF6	—	IOCCF4	IOCCF3	IOCCF2	IOCCF1	IOCCF0	278
1F56h	—	Unimplemented								—
1F57h	—	Unimplemented								—
1F58h	—	Unimplemented								—
1F59h	ANSELD(2)	ANSD7	ANSD6	ANSD5	ANSD4	ANSD3	ANSD2	ANSD1	ANSD0	242
1F5Ah	WPUD(2)	WPUD7	WPUD6	WPUD5	WPUD4	WPUD3	WPUD2	WPUD1	WPUD0	243
1F5Bh	ODCOND(2)	ODCD7	ODCD6	ODCD5	ODCD4	ODCD3	ODCD2	ODCD1	ODCD0	243
1F5Ch	SLRCOND(2)	SLRD7	SLRD6	SLRD5	SLRD4	SLRD3	SLRD2	SLRD1	SLRD0	244
1F5Dh	INLVLD(2)	INLVLD7	INLVLD6	INLVLD5	INLVLD4	INLVLD3	INLVLD2	INLVLD1	INLVLD0	244

Legend: x = unknown, u = unchanged, q = depends on condition, - = unimplemented, read as '0', r = reserved. Shaded locations unimplemented, read as '0'.

Note 1: Unimplemented data memory locations, read as '0'.
2: Present only on PIC16(L)F19175/76/85/86.
3: Present only on PIC16(L)F19185/86.

TABLE 38-1: REGISTER FILE SUMMARY FOR PIC16(L)F19155/56/75/76/85/86 DEVICES

Address	Name	Bit 7	Bit 6	Bit 5	Bit 4	Bit 3	Bit 2	Bit 1	Bit 0	Register on page
1F5Eh	—	Unimplemented								—
1F5Fh	—	Unimplemented								—
1F60h	—	Unimplemented								—
1F61h	—	Unimplemented								—
1F62h	—	Unimplemented								—
1F63h	—	Unimplemented								—
1F64h	ANSELE(2)	—	—	—	—	—	ANSE2	ANSE1	ANSE0	249
1F65h	WPUE	—	—	—	—	WPUE3	WPUE2(2)	WPUE1(2)	WPUE0(2)	250
1F66h	ODCONE(2)	—	—	—	—	—	—	ODCE1	ODCE0	250
1F67h	SLRCONE(2)	—	—	—	—	—	SLRE2	SLRE1	SLRE0	251
1F68h	INLVLE	—	—	—	—	INLVLE3	INLVLE2(2)	INLVLE1(2)	INLVLE0(2)	251
1F69h	IOCEP	—	—	—	—	IOCEP3	—	—	—	279
1F6Ah	IOCEN	—	—	—	—	IOCEN3	—	—	—	279
1F6Bh	IOCEF	—	—	—	—	IOCEF3	—	—	—	280
1F6Ch	—	Unimplemented								—
1F6Dh	—	Unimplemented								—
1F6Fh	—	Unimplemented								—
1F8Ch	—	Unimplemented								—
1F8Dh	—	Unimplemented								—
1F8Eh	—	Unimplemented								—
1F8Fh	—	Unimplemented								—
1F90h	—	Unimplemented								—
1F91h	—	Unimplemented								—
1F92h	—	Unimplemented								—
1F93h	—	Unimplemented								—
1F94h	—	Unimplemented								—
1F95h	—	Unimplemented								—
1F96h	—	Unimplemented								—
1F97h	—	Unimplemented								—
1F98h	—	Unimplemented								—
1F99h	—	Unimplemented								—
1F9Ah	—	Unimplemented								—
1F9Bh	—	Unimplemented								—
1F9Ch	—	Unimplemented								—
1F9Dh	—	Unimplemented								—
1F9Eh	—	Unimplemented								—
1F9Fh	—	Unimplemented								—
1FA0h	—	Unimplemented								—

Legend: x = unknown, u = unchanged, q = depends on condition, - = unimplemented, read as '0', r = reserved. Shaded locations unimplemented, read as '0'.

Note 1: Unimplemented data memory locations, read as '0'.

© 2017-2019 Microchip Technology Inc.

TABLE 38-1: REGISTER FILE SUMMARY FOR PIC16(L)F19155/56/75/76/85/86 DEVICES

Address	Name	Bit 7	Bit 6	Bit 5	Bit 4	Bit 3	Bit 2	Bit 1	Bit 0	Register on page
1FA1h	—	Unimplemented								—
1FA2h	—	Unimplemented								—
1FA3h	—	Unimplemented								—
1FA4h	—	Unimplemented								—
1FA5h	—	Unimplemented								—
1FA6h	—	Unimplemented								—
1FA7h	—	Unimplemented								—
1FA8h	—	Unimplemented								—
1FA9h	—	Unimplemented								—
1FAAh	—	Unimplemented								—
1FABh	—	Unimplemented								—
1FACh	—	Unimplemented								—
1FADh	—	Unimplemented								—
1FAEh	—	Unimplemented								—
1FAFh	—	Unimplemented								—
1FB0h	—	Unimplemented								—
1FB1h	—	Unimplemented								—
1FB2h	—	Unimplemented								—
1FB3h	—	Unimplemented								—
1FB4h	—	Unimplemented								—
1FB5h	—	Unimplemented								—
1FB6h	—	Unimplemented								—
1FB7h	—	Unimplemented								—
1FB8h	—	Unimplemented								—
1FB9h	—	Unimplemented								—
1FBAh	—	Unimplemented								—
1FBBh	—	Unimplemented								—
1FBCh	—	Unimplemented								—
1FBDh	—	Unimplemented								—
1FBEh	—	Unimplemented								—
1FBFh	—	Unimplemented								—
1FC0h	—	Unimplemented								—
1FC1h	—	Unimplemented								—
1FC2h	—	Unimplemented								—
1FC3h	—	Unimplemented								—
1FC4h	—	Unimplemented								—
1FC5h	—	Unimplemented								—
1FC6h	—	Unimplemented								—
1FC7h	—	Unimplemented								—
1FC8h	—	Unimplemented								—
1FC9h	—	Unimplemented								—
1FCAh	—	Unimplemented								—
1FCBh	—	Unimplemented								—
1FCCh	—	Unimplemented								—
1FCDh	—	Unimplemented								—
1FCEh	—	Unimplemented								—
1FCFh	—	Unimplemented								—

Legend: x = unknown, u = unchanged, q = depends on condition, - = unimplemented, read as '0', r = reserved. Shaded locations unimplemented, read as '0'.

Note 1: Unimplemented data memory locations, read as '0'.

TABLE 38-1: REGISTER FILE SUMMARY FOR PIC16(L)F19155/56/75/76/85/86 DEVICES

Address	Name	Bit 7	Bit 6	Bit 5	Bit 4	Bit 3	Bit 2	Bit 1	Bit 0	Register on page
1FD0h	—	Unimplemented								—
1FD1h	—	Unimplemented								—
1FD2h	—	Unimplemented								—
1FD3h	—	Unimplemented								—
1FD4h	—	Unimplemented								—
1FD5h	—	Unimplemented								—
1FD6h	—	Unimplemented								—
1FD7h	—	Unimplemented								—
1FD8h	—	Unimplemented								—
1FD9h	—	Unimplemented								—
1FDAh	—	Unimplemented								—
1FDBh	—	Unimplemented								—
1FDCh	—	Unimplemented								—
1FDDh	—	Unimplemented								—
1FDEh	—	Unimplemented								—
1FDFh	—	Unimplemented								—
1FE0h	—	Unimplemented								—
1FE1h	—	Unimplemented								—
1FE2h	—	Unimplemented								—
1FE3h	—	Unimplemented								—
1FE4h	STATUS_SHAD	—	—	—	—	—	Z_SHAD	DC_SHAD	C_SHAD	
1FE5h	WREG_SHAD	WREG_SHAD<7:0>								
1FE6h	BSR_SHAD	—	—	—	BSR_SHAD<4:0>					
1FE7h	PCLATH_SHAD	—	PCLATH_SHAD<6:0>							
1FE8h	FSR0L_SHAD	FSR0L_SHAD<7:0>								
1FE9h	FSR0H_SHAD	FSR0H_SHAD<7:0>								
1FEAh	FSR1L_SHAD	FSR1L_SHAD<7:0>								
1FEBh	FSR1H_SHAD	FSR1H_SHAD<7:0>								
1FECh	—	Unimplemented								—
1FEDh	STKPTR	—	—	—	STKPTR<4:0>					
1FEEh	TOSL	TOSL<7:0>								
1FEFh	TOSH	—	TOSH<6:0>							

Legend: x = unknown, u = unchanged, q = depends on condition, - = unimplemented, read as '0', r = reserved. Shaded locations unimplemented, read as '0'.

Note 1: Unimplemented data memory locations, read as '0'.

© 2017-2019 Microchip Technology Inc.

39.0 ELECTRICAL SPECIFICATIONS

39.1 Absolute Maximum Ratings(†)

Ambient temperature under bias ..... -40°C to +125°C
Storage temperature ..... -65°C to +150°C
Voltage on pins with respect to V_{SS}
- on V_{DD} pin
  - PIC16F19155/56/75/76/85/86 ..... -0.3V to +6.5V
  - PIC16(L)F19155/56/75/76/85/86 ..... -0.3V to +4.0V
- on $\overline{MCLR}$ pin ..... -0.3V to +9.0V
- on all other pins ..... -0.3V to (V_{DD} + 0.3V)

Maximum current
- on V_{SS} pin(1)
  - -40°C ≤ T_A ≤ +85°C ..... 350 mA
  - 85°C < T_A ≤ +125°C ..... 120 mA
- on V_{DD} pin for 28-Pin devices(1)
  - -40°C ≤ T_A ≤ +85°C ..... 250 mA
  - 85°C < T_A ≤ +125°C ..... 85 mA
- on V_{DD} pin for 40-Pin devices(1)
  - -40°C ≤ T_A ≤ +85°C ..... 350 mA
  - 85°C < T_A ≤ +125°C ..... 120 mA
- on any standard I/O pin ..... ±50 mA

Clamp current, I_K (V_{PIN} < 0 or V_{PIN} > V_{DD}) ..... ±20 mA
Total power dissipation(2) ..... 800 mW

Note 1: Maximum current rating requires even load distribution across I/O pins. Maximum current rating may be limited by the device package power dissipation characterizations, see Table 39-6 to calculate device specifications.

2: Power dissipation is calculated as follows:

$P_{DIS} = V_{DD} \times \{I_{DD} - \Sigma I_{OH}\} + \Sigma \{(V_{DD} - V_{OH}) \times I_{OH}\} + \Sigma (V_{OI} \times I_{OL})$

† NOTICE: Stresses above those listed under “Absolute Maximum Ratings” may cause permanent damage to the device. This is a stress rating only and functional operation of the device at those or any other conditions above those indicated in the operation listings of this specification is not implied. Exposure above maximum rating conditions for extended periods may affect device reliability.

39.2 Standard Operating Conditions

The standard operating conditions for any device are defined as:

Operating Voltage: $V_{DDMIN} \leq V_{DD} \leq V_{DDMAX}$
Operating Temperature: $T_{A_MIN} \leq T_A \leq T_{A_MAX}$

V_{DD} — Operating Supply Voltage(1)

PIC16(L)F19155/56/75/76/85/86

V_{DDMIN} (Fosc ≤ 16 MHz) ..... +1.8V
V_{DDMIN} (Fosc ≤ 32 MHz) ..... +2.5V
V_{DDMAX} ..... +3.6V

PIC16F19155/56/75/76/85/86

V_{DDMIN} (Fosc ≤ 16 MHz) ..... +2.3V
V_{DDMIN} (Fosc ≤ 32 MHz) ..... +2.5V
V_{DDMAX} ..... +5.5V

T_A — Operating Ambient Temperature Range

Industrial Temperature

T_{A_MIN} ..... -40°C
T_{A_MAX} ..... +85°C

Extended Temperature

T_{A_MIN} ..... -40°C
T_{A_MAX} ..... +125°C

Note 1: See Parameter Supply Voltage, DS Characteristics: Supply Voltage.

FIGURE 39-1: VOLTAGE FREQUENCY GRAPH, -40°C ≤ TA ≤ +125°C, PIC16F19155/56/75/76/85/86 ONLY

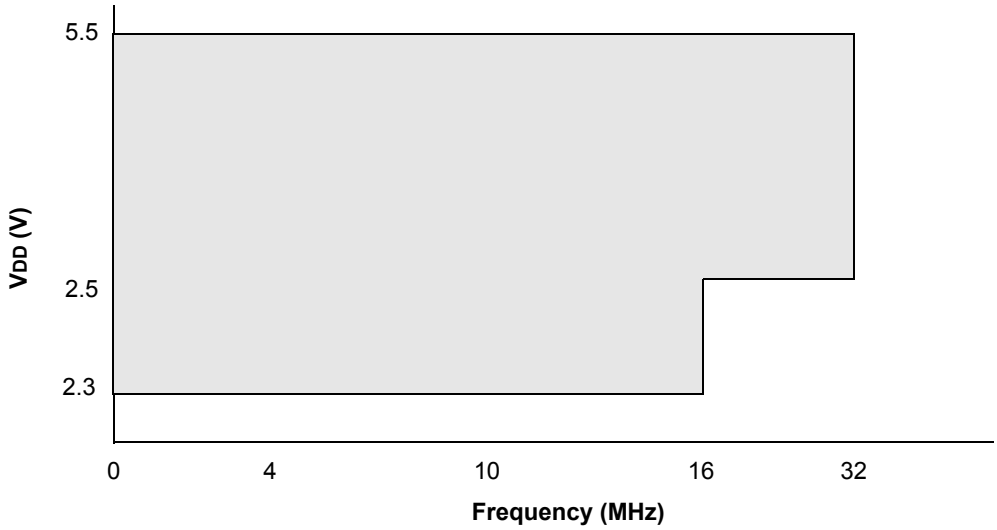

Note 1: The shaded region indicates the permissible combinations of voltage and frequency.
2: Refer to Table 39-7 for each Oscillator mode's supported frequencies.

FIGURE 39-2: VOLTAGE FREQUENCY GRAPH, -40°C ≤ TA ≤ +125°C, PIC16(L)F19155/56/75/76/85/86 ONLY

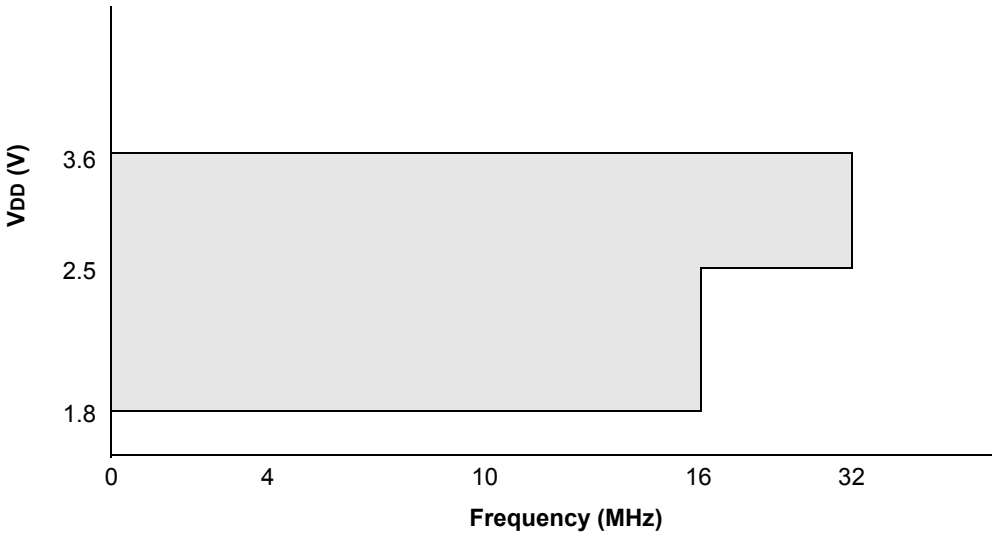

Note 1: The shaded region indicates the permissible combinations of voltage and frequency.
2: Refer to Table 39-7 for each Oscillator mode's supported frequencies.

39.3 DC Characteristics

TABLE 39-1: SUPPLY VOLTAGE

PIC16(L)F19155/56/75/76/85/86			Standard Operating Conditions (unless otherwise stated)				
PIC16F19155/56/75/76/85/86							
Param. No.	**Sym.**	**Characteristic**	**Min.**	**Typ.†**	**Max.**	**Units**	**Conditions**
Supply Voltage							
D002	VDD		1.8 2.5	— —	3.6 3.6	V V	FOSC ≤ 16 MHz FOSC > 16 MHz
D002	VDD		2.3 2.5	— —	5.5 5.5	V V	FOSC ≤ 16 MHz FOSC ≥ 16 MHz
RAM Data Retention(1)							
D003	VDR		1.5	—	—	V	Device in Sleep mode
D003	VDR		1.7	—	—	V	Device in Sleep mode
Power-on Reset Release Voltage(2)							
D004	VPOR		—	1.6	—	V	BOR or LPBOR disabled(3)
D004	VPOR		—	1.6	—	V	BOR or LPBOR disabled(3)
Power-on Reset Rearm Voltage(2)							
D005	VPORR		—	0.8	—	V	BOR or LPBOR disabled(3)
D005	VPORR		—	1.5	—	V	BOR or LPBOR disabled(3)
VDD Rise Rate to ensure internal Power-on Reset signal(2)							
D006	SVDD		0.05	—	—	V/ms	BOR or LPBOR disabled(3)
D006	SVDD		0.05	—	—	V/ms	BOR or LPBOR disabled(3)

† Data in “Typ.” column is at 3.0V, 25°C unless otherwise stated. These parameters are for design guidance only and are not tested.

Note 1: This is the limit to which VDD can be lowered in Sleep mode without losing RAM data.

2: See Figure 39-3, POR and POR REARM with Slow Rising VDD.

3: Please see Table 39-11 for BOR and LPBOR trip point information.

4: = LF device

FIGURE 39-3: POR AND POR REARM WITH SLOW RISING VDD

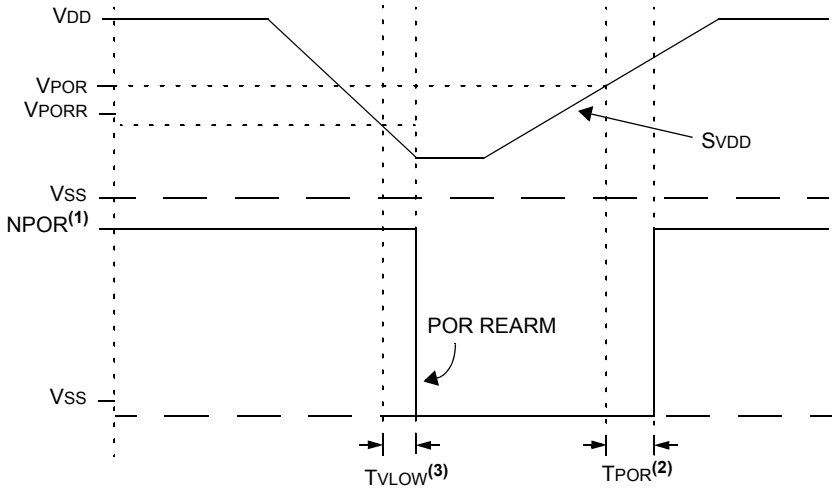

Note 1: When NPOR is low, the device is held in Reset.
2: TPOR 1 μs typical.
3: TVLOW 2.7 μs typical.

TABLE 39-2: SUPPLY CURRENT (I_{DD}/I_{BAT})(1,2,4)

PIC16(L)F19155/56/75/76/85/86			Standard Operating Conditions (unless otherwise stated)					
PIC16F19155/56/75/76/85/86								
Param. No.	**Symbol**	**Device Characteristics**	**Min.**	**Typ.†**	**Max.**	**Units**	**Conditions**	
							VDD	**Note**
D101	$I_{DD_{HFO16}}$	HFINTOSC = 16 MHz	—	1.78	2.9	mA	3.0V	
D101	$I_{DD_{HFO16}}$	HFINTOSC = 16 MHz	—	1.82	3.0	mA	3.0V	
D102	$I_{DD_{HFOPLL}}$	HFINTOSC = 32 MHz	—	3.41	5.5	mA	3.0V	
D102	$I_{DD_{HFOPLL}}$	HFINTOSC = 32 MHz	—	3.43	5.5	mA	3.0V	
D104	$I_{DD_{IDLE}}$	Idle mode, HFINTOSC = 16 MHz	—	1.14	2.8	mA	3.0V	
D104	$I_{DD_{IDLE}}$	Idle mode, HFINTOSC = 16 MHz	—	1.18	3.0	mA	3.0V	
D105	$I_{DD_{DOZE}}$(3)	Doze mode, HFINTOSC = 16 MHz, Doze Ratio = 16	—	1.23	2.4	mA	3.0V	
D105	$I_{DD_{DOZE}}$(3)	Doze mode, HFINTOSC = 16 MHz, Doze Ratio = 16	—	1.3	2.5	mA	3.0V	
D106	I_{BAT}	V_{BAT} Current with SOSC + RTCC	—	1.05	4.8	μA	2.5V	
D106	I_{BAT}	V_{BAT} Current with SOSC + RTCC	—	1.1	5.0	μA	2.5V	

† Data in “Typ.” column is at 3.0V, 25°C unless otherwise stated. These parameters are for design guidance only and are not tested.

Note 1: The test conditions for all I_{DD} measurements in external operation mode are: OSC1 = external square wave, from rail-to-rail; all I/O pins are outputs driven low; $\overline{MCLR}$ = V_{DD}; WDT disabled.

2: The supply current is mainly a function of the operating voltage and frequency. Other factors, such as I/O pin loading and switching rate, oscillator type, internal code execution pattern and temperature, also have an impact on the current consumption.

3: $I_{DD_{DOZE}}$ = [$I_{DD_{IDLE}}$*(N-1)/N] + $I_{DD_{HFO}}$16/N where N = DOZE Ratio (Register 11-2).

4: PMD bits are all in the default state, no modules are disabled.

TABLE 39-3: POWER-DOWN CURRENT (IPD)(1,2)

PIC16(L)F19155/56/75/76/85/86				Standard Operating Conditions (unless otherwise stated)					
PIC16F19155/56/75/76/85/86				Standard Operating Conditions (unless otherwise stated) VREGPM = 1					
Param. No.	Symbol	Device Characteristics	Min.	Typ.†	Max. +85°C	Max. +125°C	Units	Conditions	
								VDD	Note
D200	IPD	IPD Base	—	0.35	2.0	6.0	μA	3.0V	
D200	IPD	IPD Base	—	0.42	4.0	8.0	μA	3.0V	
			—	18	35	42	μA	3.0V	VREGPM = 0
D201	IPD_WDT	Low-Frequency Internal Oscillator/WDT	—	1.1	3.3	9.0	μA	3.0V	
D201	IPD_WDT	Low-Frequency Internal Oscillator/WDT	—	1.2	3.4	9.0	μA	3.0V	
D202	IPD_SOSC	Secondary Oscillator (SOSC)	—	0.6	3.2	6.0	μA	3.0V	
D202	IPD_SOSC	Secondary Oscillator (SOSC)	—	0.8	4.0	7.0	μA	3.0V	
D203	IPD_FVR	FVR	—	37	57	75	μA	3.0V	
D203	IPD_FVR	FVR	—	48	58	76	μA	3.0V	
D204	IPD_BOR	Brown-out Reset (BOR)	—	10	16	18	μA	3.0V	
D204	IPD_BOR	Brown-out Reset (BOR)	—	14	17	19	μA	3.0V	
D205	IPD_LPBOR	Low-Power Brown-out Reset (LPBOR)	—	0.3	3.0	5.0	μA	3.0V	
D205	IPD_LPBOR	Low-Power Brown-out Reset (LPBOR)	—	0.5	3.0	6.0	μA	3.0V	
D206	IPD_ADCA	ADC - Active	—	395	547	547	μA	3.0V	ADC is converting (4)
D206	IPD_ADCA	ADC - Active	—	396	590	590	μA	3.0V	ADC is converting (4)
D207	IPD_ADCA_CHGPUMP	ADC - Active with Charge Pump	—	495	602	602	μA	3.0V	
D207	IPD_ADCA_CHGPUMP	ADC - Active with Charge Pump	—	495	602	602	μA	3.0V	
D208	IPD_CMP	Comparator C1	—	30	45	55	μA	3.0V	
D208	IPD_CMP	Comparator C1	—	33	50	60	μA	3.0V	
D209	IPD_CMP_LP	LP Comparator C2(6)	—	1.3	2.64	3.5	μA	3.0V	
D209	IPD_CMP_LP	LP Comparator C2(6)	—	1.52	2.65	3.5	μA	3.0V	
D210	IPD_LCD_PUMP_3V	3V Pump Output	—	2.8	6.5	9.0	μA	2.5V	
D210	IPD_LCD_PUMP_5V	5V Pump Output	—	3.0	7.0	11	μA	2.5V	

† Data in "Typ." column is at 3.0V, 25°C unless otherwise stated. These parameters are for design guidance only and are not tested.

Note 1: The peripheral current is the sum of the base IDD and the additional current consumed when this peripheral is enabled. The peripheral Δ current can be determined by subtracting the base IDD or IPD current from this limit. Max. values should be used when calculating total current consumption.

2: The power-down current in Sleep mode does not depend on the oscillator type. Power-down current is measured with the part in Sleep mode with all I/O pins in high-impedance state and tied to VSS.

3: All peripheral currents listed are on a per-peripheral basis if more than one instance of a peripheral is available.

4: ADC clock source is FRC.

5: = LF device

6: The IPD spec for the LP comparator does not include current consumed by the supporting clock.

TABLE 39-4: I/O PORTS

Standard Operating Conditions (unless otherwise stated)							
Param. No.	**Sym.**	**Characteristic**	**Min.**	**Typ†**	**Max.**	**Units**	**Conditions**
	VIL	**Input Low Voltage**					
		I/O PORT:					
D300		with TTL buffer	—	—	0.8	V	4.5V ≤ VDD ≤ 5.5V
D301			—	—	0.15 VDD	V	1.8V ≤ VDD ≤ 4.5V
D302		with Schmitt Trigger buffer	—	—	0.2 VDD	V	2.0V ≤ VDD ≤ 5.5V
D303		with I²C levels	—	—	0.3 VDD	V	
D304		with SMBus levels	—	—	0.8	V	2.7V ≤ VDD ≤ 5.5V
D305		$\overline{\text{MCLR}}$	—	—	0.2 VDD	V	
	VIH	**Input High Voltage**					
		I/O PORT:					
D320		with TTL buffer	2.0	—	—	V	4.5V ≤ VDD ≤ 5.5V
D321			0.25 VDD + 0.8	—	—	V	1.8V ≤ VDD ≤ 4.5V
D322		with Schmitt Trigger buffer	0.8 VDD	—	—	V	2.0V ≤ VDD ≤ 5.5V
D323		with I²C levels	0.7 VDD	—	—	V	
D324		with SMBus levels	2.1	—	—	V	2.7V ≤ VDD ≤ 5.5V
D325		$\overline{\text{MCLR}}$	0.7 VDD	—	—	V	
	IIL	**Input Leakage Current(1)**					
D340		I/O Ports	—	± 5	± 125	nA	VSS ≤ VPIN ≤ VDD, Pin at high-impedance, 85°C
D341			—	± 5	± 1000	nA	VSS ≤ VPIN ≤ VDD, Pin at high-impedance, 125°C
D342		$\overline{\text{MCLR}}$(2)	—	± 50	± 200	nA	VSS ≤ VPIN ≤ VDD, Pin at high-impedance, 85°C
	IPUR	**Weak Pull-up Current**					
D350			25	120	200	μA	VDD = 3.0V, VPIN = VSS
	VOL	**Output Low Voltage**					
D080		Standard I/O ports	—	—	0.6	V	IOL = 8 mA, VDD = 5.0V IOL = 6 mA, VDD = 3.3V IOL = 1.8 mA, VDD = 1.8V
D080A		High-Drive I/O Ports	— — —	— 0.6 0.6	0.6 — —	V V V	IOH = 10 mA, VDD = 2.3V, HIDCx = 1 IOH = 32 mA, VDD = 3.0V, HIDCx = 1 IOH = 51 mA, VDD = 5.0V, HIDCx = 1
D090	VOH	**Output High Voltage**					
		Standard I/O Ports	VDD - 0.7	—	—	V	IOH = 3.5 mA, VDD = 5.0V IOH = 3 mA, VDD = 3.3V IOH = 1 mA, VDD = 1.8V
D090A		High-Drive I/O Ports	VDD - 0.7	— VDD - 0.7 VDD - 0.7	— — —	V V V	IOH = 10 mA, VDD = 2.3V, HIDCx = 1 IOH = 37 mA, VDD = 3.0V, HIDCx = 1 IOH = 54 mA, VDD = 5.0V, HIDCx = 1
D380	CIO	**All I/O pins**	—	5	50	pF	

† Data in "Typ" column is at 3.0V, 25°C unless otherwise stated. These parameters are for design guidance only and are not tested.

Note 1: Negative current is defined as current sourced by the pin.

2: The leakage current on the $\overline{\text{MCLR}}$ pin is strongly dependent on the applied voltage level. The specified levels represent normal operating conditions. Higher leakage current may be measured at different input voltages.

TABLE 39-5: MEMORY PROGRAMMING SPECIFICATIONS

Standard Operating Conditions (unless otherwise stated)							
Param. No.	**Sym.**	**Characteristic**	**Min.**	**Typ†**	**Max.**	**Units**	**Conditions**
High Voltage Entry Programming Mode Specifications							
MEM01	V_{IHH}	Voltage on $\overline{MCLR}$/VPP pin to enter programming mode	8	—	9	V	**(Note 2, Note 3)**
MEM02	I_{PPGM}	Current on $\overline{MCLR}$/VPP pin during programming mode	—	1	—	mA	**(Note 2)**
Programming Mode Specifications							
MEM10	V_{BE}	VDD for Bulk Erase	—	2.7	—	V	
MEM11	I_{DDPGM}	Supply Current during Programming operation	—	—	10	mA	
Data EEPROM Memory Specifications							
MEM20	ED	DataEE Byte Endurance	100k			E/W	-40°C ≤ TA ≤ +85°C
MEM21	TD-RET	Characteristic Retention		40		Year	Provided no other specifications are violated
MEM22	ND_REF	Total Erase/Write Cycles before Refresh			100k	E/W	
MEM23	VD_RW	Vdd for Read or Erase/Write operation	VDDMIN		VDDMAX	V	
MEM24	TD_BEW	Byte Erase and Write Cycle Time		4.0	5.0	ms	
Program Flash Memory Specifications							
MEM30	E_P	Flash Memory Cell Endurance	10k	—	—	E/W	-40°C ≤ TA ≤ +85°C (**Note 1**)
MEM32	T_{P_RET}	Characteristic Retention	—	40	—	Year	Provided no other specifications are violated
MEM33	V_{P_RD}	VDD for Read operation	VDDMIN	—	VDDMAX	V	
MEM34	V_{P_REW}	VDD for Row Erase or Write operation	VDDMIN	—	VDDMAX	V	
MEM35	T_{P_REW}	Self-Timed Row Erase or Self-Timed Write	—	2.0	2.5	ms	

† Data in “Typ” column is at 3.0V, 25°C unless otherwise stated. These parameters are for design guidance only and are not tested.

Note 1: Flash Memory Cell Endurance for the Flash memory is defined as: One Row Erase operation and one Self-Timed Write.

2: Required only if CONFIG4, bit LVP is disabled.

3: The MPLAB® ICD2 does not support variable VPP output. Circuitry to limit the ICD2 VPP voltage must be placed between the ICD2 and target system when programming or debugging with the ICD2.

TABLE 39-6: THERMAL CHARACTERISTICS

Standard Operating Conditions (unless otherwise stated) Operating temperature -40°C ≤ TA ≤ +125°C					
Param. No.	**Sym.**	**Characteristic**	**Typ.**	**Units**	**Conditions**
TH01	θJA	Thermal Resistance Junction to Ambient	60	°C/W	28-pin SPDIP package
			80	°C/W	28-pin SOIC package
			90	°C/W	28-pin SSOP package
			48	°C/W	28-pin UQFN 4x4 mm package
			47.2	°C/W	40-pin PDIP package
			41.0	°C/W	40-pin UQFN 5x5 package
			46.0	°C/W	44-pin TQFP package
			24.4	°C/W	44-pin QFN 8x8 mm package
			27.6	°C/W	48-pin UQFN 6x6 package
			—	°C/W	48-pin TQFP 7x7 package
TH02	θJC	Thermal Resistance Junction to Case	31.4	°C/W	28-pin SPDIP package
			24	°C/W	28-pin SOIC package
			24	°C/W	28-pin SSOP package
			12	°C/W	28-pin UQFN 4x4 mm package
			24.70	°C/W	40-pin PDIP package
			5.5	°C/W	40-pin UQFN 5x5 package
			14.5	°C/W	44-pin TQFP package
			20.0	°C/W	44-pin QFN 8x8 mm package
			6.7	°C/W	48-pin UQFN 6x6 package
			—	°C/W	48-pin TQFP 7x7 package
TH03	TJMAX	Maximum Junction Temperature	150	°C	
TH04	PD	Power Dissipation	—	W	PD = PINTERNAL + PI/O
TH05	PINTERNAL	Internal Power Dissipation	—	W	PINTERNAL = IDD x VDD(1)
TH06	PI/O	I/O Power Dissipation	—	W	PI/O = Σ (IOL * VOL) + Σ (IOH * (VDD - VOH))
TH07	PDER	Derated Power	—	W	PDER = PDMAX (TJ - TA)/θJA(2)

Note 1: IDD is current to run the chip alone without driving any load on the output pins.
2: TA = Ambient Temperature, TJ = Junction Temperature

39.4 AC Characteristics

FIGURE 39-4: LOAD CONDITIONS

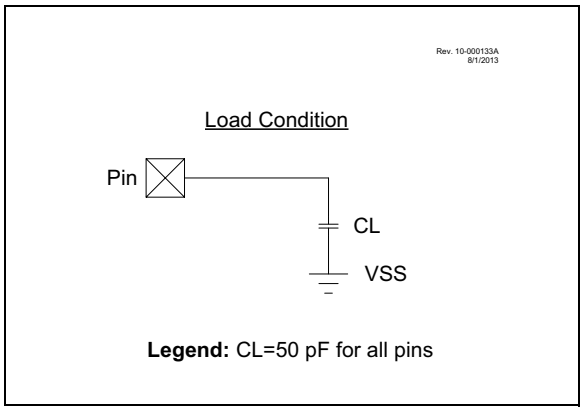

FIGURE 39-5: CLOCK TIMING

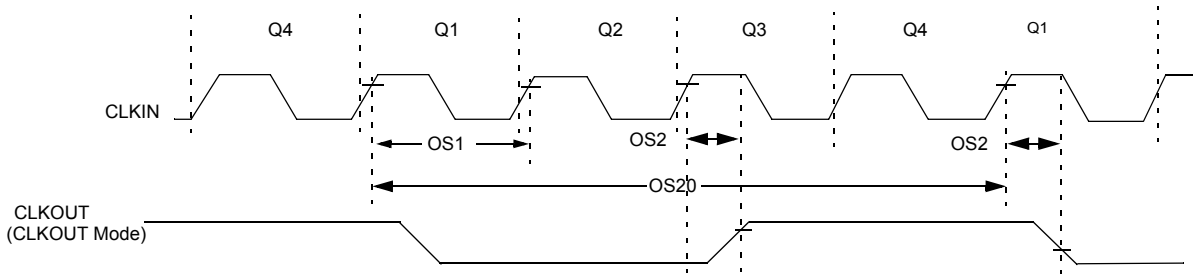

Note 1: See Table 39-7.

TABLE 39-7: EXTERNAL CLOCK/OSCILLATOR TIMING REQUIREMENTS

Standard Operating Conditions (unless otherwise stated)							
Param. No.	**Sym.**	**Characteristic**	**Min.**	**Typ†**	**Max.**	**Units**	**Conditions**
ECL Oscillator							
OS1	F_{ECL}	Clock Frequency	—	—	500	kHz	
OS2	T_{ECL_DC}	Clock Duty Cycle	40	—	60	%	
ECM Oscillator							
OS3	F_{ECM}	Clock Frequency	—	—	8	MHz	
OS4	T_{ECM_DC}	Clock Duty Cycle	40	—	60	%	
ECH Oscillator							
OS5	F_{ECH}	Clock Frequency	—	—	32	MHz	
OS6	T_{ECH_DC}	Clock Duty Cycle	40	—	60	%	
System Oscillator							
OS20	F_{OSC}	System Clock Frequency	—	—	32	MHz	**(Note 2, Note 3)**
OS21	F_{CY}	Instruction Frequency	—	FOSC/4	—	MHz	
OS22	T_{CY}	Instruction Period	125	$1/F_{CY}$	—	ns	

* These parameters are characterized but not tested.

† Data in “Typ” column is at 3.0V, 25°C unless otherwise stated. These parameters are for design guidance only and are not tested.

Note 1: Instruction cycle period (TCY) equals four times the input oscillator time base period. All specified values are based on characterization data for that particular oscillator type under standard operating conditions with the device executing code. Exceeding these specified limits may result in an unstable oscillator operation and/or higher than expected current consumption. All devices are tested to operate at “min” values with an external clock applied to OSC1 pin. When an external clock input is used, the “max” cycle time limit is “DC” (no clock) for all devices.

2: The system clock frequency (FOSC) is selected by the “main clock switch controls” as described in **Section 9.0 “Oscillator Module (with Fail-Safe Clock Monitor)”**.

3: The system clock frequency (FOSC) must meet the voltage requirements defined in the **Section 39.2 “Standard Operating Conditions”**.

TABLE 39-8: INTERNAL OSCILLATOR PARAMETERS(1)

Standard Operating Conditions (unless otherwise stated)							
Param. No.	**Sym.**	**Characteristic**	**Min.**	**Typ†**	**Max.**	**Units**	**Conditions**
OS50	FHFOSC	Precision Calibrated HFINTOSC Frequency	—	4 8 12 16 32	—	MHz	(**Note 2**)
OS51	FHFOSCLP	Low-Power Optimized HFINTOSC Frequency	— —	1 2	— —	MHz MHz	
OS52	FMFOSC	Internal Calibrated MFINTOSC Frequency	—	500	—	kHz	
OS53	FLFOSC	Internal LFINTOSC Frequency	—	31	—	kHz	
OS54	THFOSCST	HFINTOSC Wake-up from Sleep Start-up Time	— —	11 50	20 —	µs µs	VREGPM = 0 VREGPM = 1
OS56	TLFOSCST	LFINTOSC Wake-up from Sleep Start-up Time	—	0.2	—	ms	

† Data in "Typ" column is at 3.0V, 25°C unless otherwise stated. These parameters are for design guidance only and are not tested.

Note 1: To ensure these oscillator frequency tolerances, VDD and VSS must be capacitively decoupled as close to the device as possible. 0.1 µF and 0.01 µF values in parallel are recommended.

2: See Figure 39-6: Precision Calibrated HFINTOSC Frequency Accuracy Over Device VDD and Temperature.

FIGURE 39-6: PRECISION CALIBRATED HFINTOSC FREQUENCY ACCURACY OVER DEVICE VDD AND TEMPERATURE

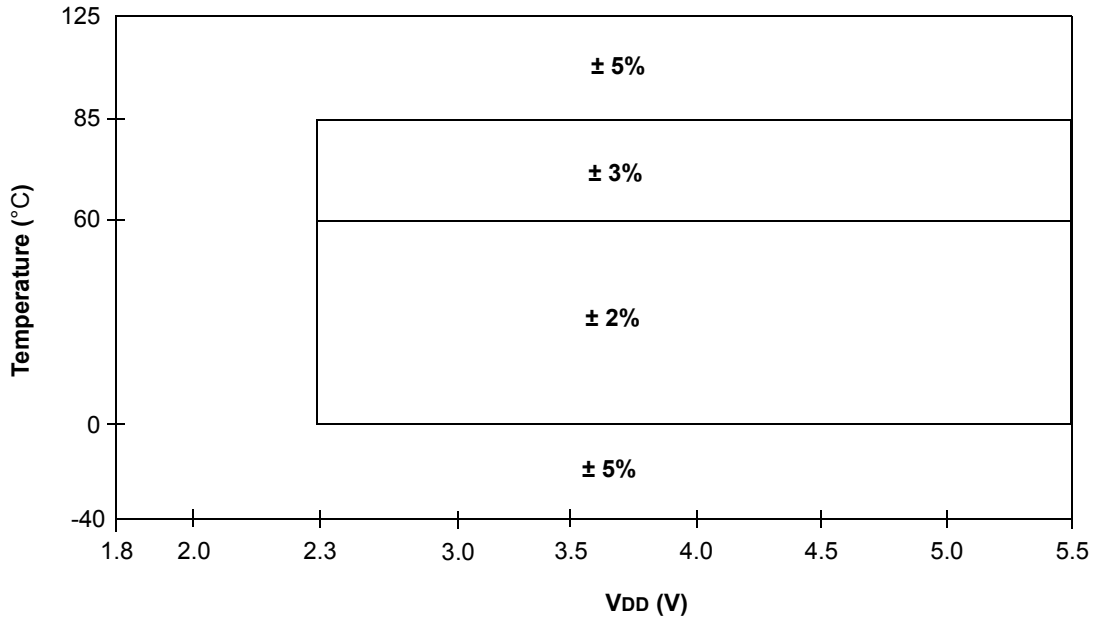

Note 1: HFINTOSC accuracy is ±0.2% (typical) at 3V, 25°C.

TABLE 39-9: PLL SPECIFICATIONS

Standard Operating Conditions (unless otherwise stated) VDD ≥ 2.5V							
Param. No.	**Sym.**	**Characteristic**	**Min.**	**Typ†**	**Max.**	**Units**	**Conditions**
PLL01	FPLLIN	PLL Input Frequency Range	4	—	8	MHz	
PLL02	FPLLOUT	PLL Output Frequency Range	16	—	32	MHz	**Note 1**
PLL03	TPLLST	PLL Lock Time from Start-up	—	200	—	µs	
PLL04	FPLLJIT	PLL Output Frequency Stability (Jitter)	-0.25	—	0.25	%	

* These parameters are characterized but not tested.

† Data in “Typ” column is at 5V, 25°C unless otherwise stated. These parameters are for design guidance only and are not tested.

Note 1: The output frequency of the PLL must meet the FOSC requirements listed in Parameter D002.

FIGURE 39-7: CLKOUT AND I/O TIMING

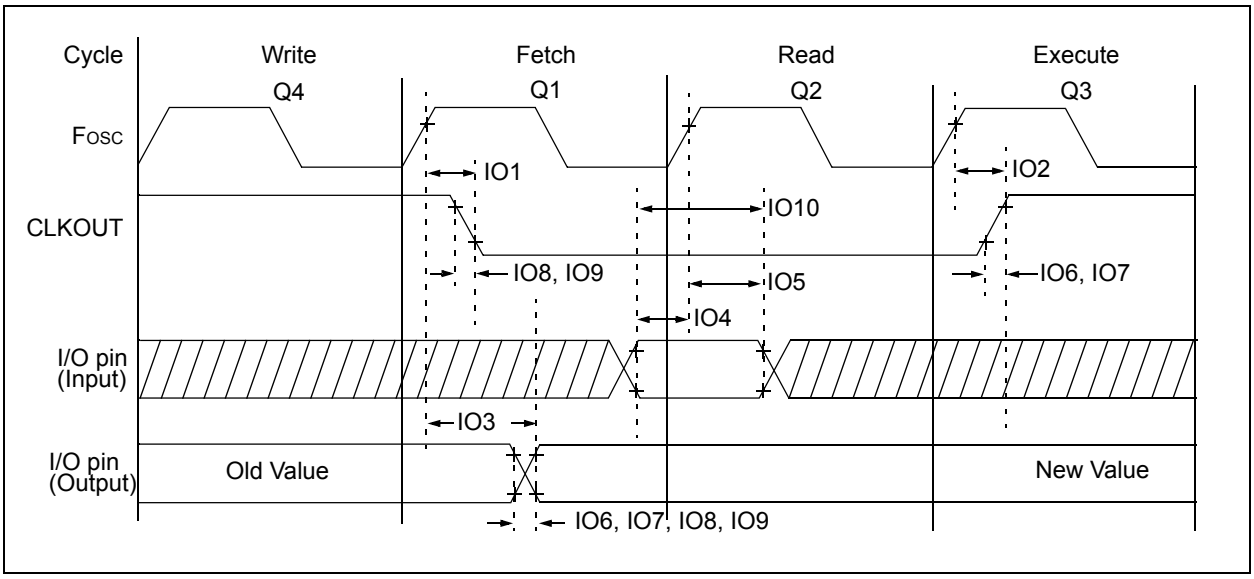

TABLE 39-10: I/O AND CLKOUT TIMING SPECIFICATIONS

Standard Operating Conditions (unless otherwise stated)							
Param. No.	**Sym.**	**Characteristic**	**Min.**	**Typ†**	**Max.**	**Units**	**Conditions**
IO1*	$T_{CLKOUTH}$	CLKOUT rising edge delay (rising edge Fosc (Q1 cycle) to falling edge CLKOUT	—	—	70	ns	
IO2*	$T_{CLKOUTL}$	CLKOUT falling edge delay (rising edge Fosc (Q3 cycle) to rising edge CLKOUT	—	—	72	ns	
IO3*	T_{IO_VALID}	Port output valid time (rising edge Fosc (Q1 cycle) to port valid)	—	50	70	ns	
IO4*	T_{IO_SETUP}	Port input setup time (Setup time before rising edge Fosc – Q2 cycle)	20	—	—	ns	
IO5*	T_{IO_HOLD}	Port input hold time (Hold time after rising edge Fosc – Q2 cycle)	50	—	—	ns	
IO6*	T_{IOR_SLREN}	Port I/O rise time, slew rate enabled	—	25	—	ns	V_{DD} = 3.0V
IO7*	T_{IOR_SLRDIS}	Port I/O rise time, slew rate disabled	—	5	—	ns	V_{DD} = 3.0V
IO8*	T_{IOF_SLREN}	Port I/O fall time, slew rate enabled	—	25	—	ns	V_{DD} = 3.0V
IO9*	T_{IOF_SLRDIS}	Port I/O fall time, slew rate disabled	—	5	—	ns	V_{DD} = 3.0V
IO10*	T_{INT}	INT pin high or low time to trigger an interrupt	25	—	—	ns	
IO11*	T_{IOC}	Interrupt-on-Change minimum high or low time to trigger interrupt	25	—	—	ns	

*These parameters are characterized but not tested.

FIGURE 39-8: RESET, WATCHDOG TIMER, OSCILLATOR START-UP TIMER AND POWER-UP TIMER TIMING

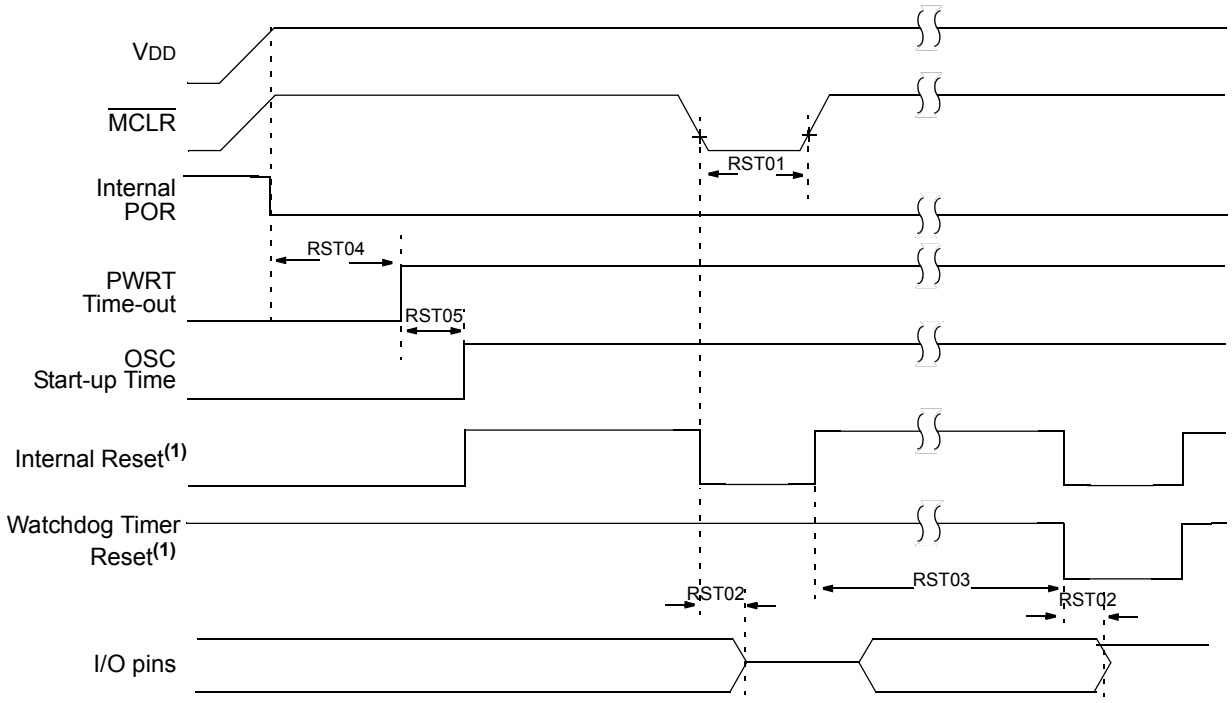

Note 1: Asserted low.

FIGURE 39-9: BROWN-OUT RESET TIMING AND CHARACTERISTICS

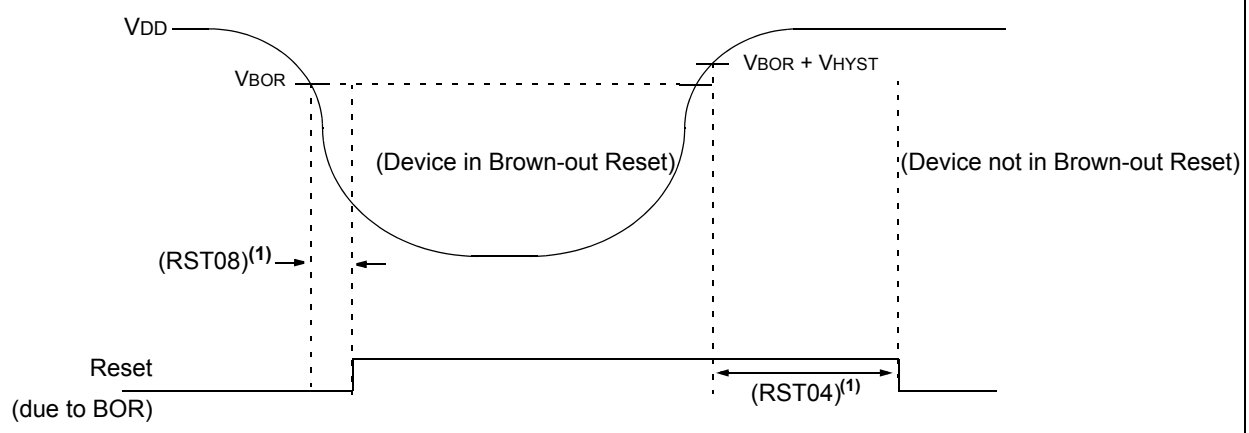

Note 1: 64 ms delay only if $\overline{\text{PWRTE}}$ bit in the Configuration Word register is programmed to '1'; 2 ms delay if $\overline{\text{PWRTE}}$ = 0.

TABLE 39-11: RESET, WDT, OSCILLATOR START-UP TIMER, POWER-UP TIMER, BROWN-OUT RESET AND LOW-POWER BROWN-OUT RESET SPECIFICATIONS

Standard Operating Conditions (unless otherwise stated)							
Param. No.	**Sym.**	**Characteristic**	**Min.**	**Typ†**	**Max.**	**Units**	**Conditions**
RST01*	TMCLR	$\overline{\text{MCLR}}$ Pulse Width Low to ensure Reset	2	—	—	μs	
RST02*	TIOZ	I/O high-impedance from Reset detection	—	—	2	μs	
RST03	TWDT	Watchdog Timer Time-out Period	—	16	—	ms	16 ms Nominal Reset Time
RST04*	TPWRT	Power-up Timer Period	—	65	—	ms	
RST05	VBOR	Brown-out Reset Voltage(4)	—	2.70 2.45 1.90	—	V V V	BORV = 0 BORV = 1 (PIC16F19155/56/75/76/85/86) BORV = 1 (PIC16(L)F19155/56/75/76/85/86)
RST06	VBORHYS	Brown-out Reset Hysteresis	—	40	—	mV	
RST07	TBORDC	Brown-out Reset Response Time	—	3	—	μs	
RST08	VLPBOR	Low-Power Brown-out Reset Voltage	—	2.45	—	V	

* These parameters are characterized but not tested.

† Data in "Typ" column is at 3.0V, 25°C unless otherwise stated. These parameters are for design guidance only and are not tested.

Note 1: To ensure these voltage tolerances, VDD and VSS must be capacitively decoupled as close to the device as possible. 0.1 μF and 0.01 μF values in parallel are recommended.

TABLE 39-12: ANALOG-TO-DIGITAL CONVERTER (ADC) ACCURACY SPECIFICATIONS(1,2)

Standard Operating Conditions (unless otherwise stated) VDD = 3.0V, TA = 25°C							
Param. No.	**Sym.**	**Characteristic**	**Min.**	**Typ†**	**Max.**	**Units**	**Conditions**
AD01	NR	Resolution	—	—	12	bit	
AD02	EIL	Integral Error	—	±0.1	±2.0	LSb	ADCREF+ = 3.0V
AD03	EDL	Differential Error	—	±0.2	±1.0	LSb	ADCREF+ = 3.0V
AD04	EOFF	Offset Error	—	2	6	LSb	ADCREF+ = 3.0V
AD05	EGN	Gain Error	—	2	6	LSb	ADCREF+ = 3.0V
AD06	VADREF	ADC Reference Voltage	1.8	—	VDD	V	
AD07	VAIN	Full-Scale Range	—	—	ADREF+	V	
AD08	ZAIN	Recommended Impedance of Analog Voltage Source	—	1	—	kΩ	
AD09	RVREF	ADC Voltage Reference Ladder Impedance	—	50	—	kΩ	

* These parameters are characterized but not tested.

† Data in "Typ" column is at 3.0V, 25°C unless otherwise stated. These parameters are for design guidance only and are not tested.

Note 1: Use of the ADC charge pump to improve linearity performance is recommended for VDD <= 2.5V

2: This is the impedance seen by the VREF pads when the external reference pads are selected.

TABLE 39-13: ANALOG-TO-DIGITAL CONVERTER (ADC) CONVERSION TIMING SPECIFICATIONS

Standard Operating Conditions (unless otherwise stated)							
Param. No.	**Sym.**	**Characteristic**	**Min.**	**Typ†**	**Max.**	**Units**	**Conditions**
AD20	TAD	ADC Clock Period	1	—	9	μs	Using FOSC as the ADC clock source ADCS = 1
AD21			—	2	—	μs	Using FRC as the ADC clock source ADSC = 0
AD22	TCNV	Conversion Time	—	14 TAD + 2 TCY	—	—	Using FOSC as the ADC clock source ADCS = 1
			—	16 TAD + 2 TCY	—	—	Using FRC as the ADC clock source ADSC = 0
AD24	THCD	Sample and Hold Capacitor Disconnect Time	—	2 TAD + 1 TCY	—	—	Using FOSC as the ADC clock source ADCS = 1
			—	3 TAD + 2 TCY	—	—	Using FRC as the ADC clock source ADSC = 0

* These parameters are characterized but not tested.

† Data in "Typ" column is at 3.0V, 25°C unless otherwise stated. These parameters are for design guidance only and are not tested.

Note 1: A TAD of 8 μs is recommended measuring the 1/3 tap point on the VBAT.

FIGURE 39-10: ADC CONVERSION TIMING (ADC CLOCK FOSC-BASED)

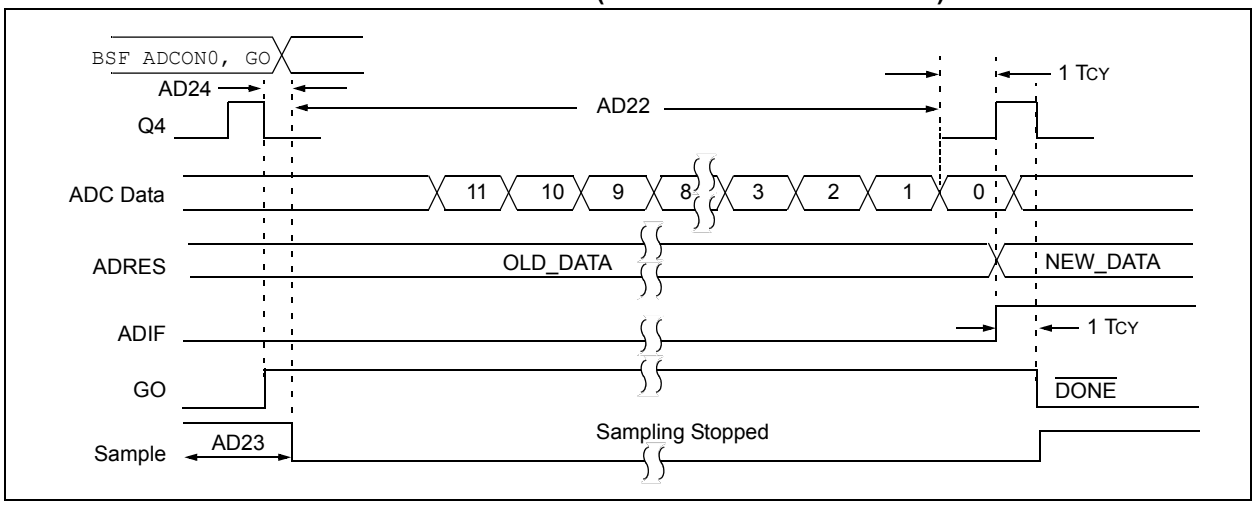

FIGURE 39-11: ADC CONVERSION TIMING (ADC CLOCK FROM ADCRC)

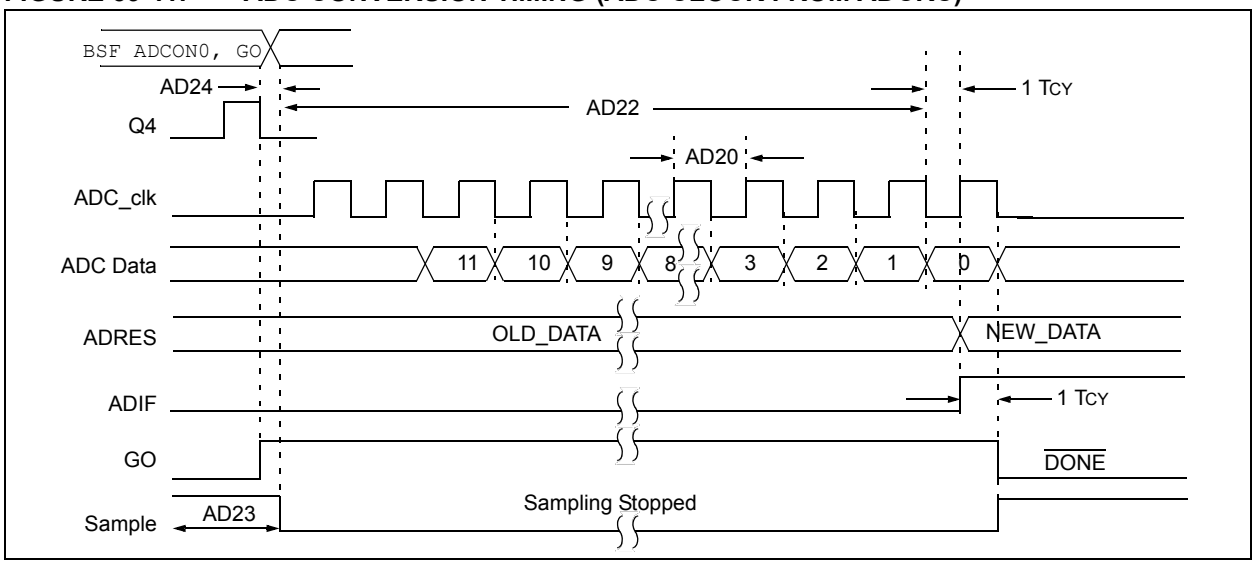

TABLE 39-14: COMPARATOR SPECIFICATIONS

Standard Operating Conditions (unless otherwise stated) VDD = 3.0V, TA = 25°C							
Param. No.	**Sym.**	**Characteristics**	**Min.**	**Typ.**	**Max.**	**Units**	**Comments**
CM01	VIOFF	Input Offset Voltage	—	±5	±40	mV	VICM = VDD/2
CM02	VICM	Input Common Mode Range	GND	—	VDD	V	
CM03	CMRR	Common Mode Input Rejection Ratio	—	50	—	dB	
CM04	VHYST	Comparator Hysteresis	10	25	40	mV	
CM05	TRESP(1)	Response Time, Rising Edge	—	300	600	ns	
		Response Time, Falling Edge	—	220	500	ns	
CMOS6	TMCV2VO(2)	Mode Change to Valid Output	—	—	10	µs	

* These parameters are characterized but not tested.

Note 1: Response time measured with one comparator input at VDD/2, while the other input transitions from VSS to VDD.

2: A mode change includes changing any of the control register values, including module enable.

TABLE 39-15: LOW-POWERED CLOCKED COMPARATOR SPECIFICATIONS

Standard Operating Conditions (unless otherwise stated) VDD = 3.0V, TA = 25°C							
Param. No.	**Sym.**	**Characteristics**	**Min.**	**Typ.**	**Max.**	**Units**	**Comments**
CM07	VIOFF	Input Offset Voltage	—	±15	±65	mV	VICM = VDD/2
CM08	VICM	Input Common Mode Range	GND	—	VDD	V	
CM09	CMRR	Common Mode Input Rejection Ratio	—	50	—	dB	
CM010	VHYST	Comparator Hysteresis	—	25	50	mV	
CM011	TRESP(1)(3)	Response Time, Rising Edge	—	300	600	ns	
		Response Time, Falling Edge	—	220	500	ns	

* These parameters are characterized but not tested.

Note 1: Response time measured with one comparator input at VDD/2, while the other input transitions from VSS to VDD.

2: A mode change includes changing any of the control register values, including module enable.

3: Comparator output state change occurs on the rising edge of LFINTOSC.

TABLE 39-16: 5-BIT DAC SPECIFICATIONS

Standard Operating Conditions (unless otherwise stated) VDD = 3.0V, TA = 25°C							
Param. No.	**Sym.**	**Characteristics**	**Min.**	**Typ.**	**Max.**	**Units**	**Comments**
DSB01	VLSB	Step Size	—	(VDACREF+ - VDACREF-)/32	—	V	
DSB01	VACC	Absolute Accuracy	—	—	± 0.5	LSb	
DSB03*	RUNIT	Unit Resistor Value	—	5000	—	Ω	
DSB04*	TST	Settling Time(1)	—	—	10	μs	

* These parameters are characterized but not tested.

† Data in "Typ" column is at 3.0V, 25°C unless otherwise stated. These parameters are for design guidance only and are not tested.

Note 1: Settling time measured while DACR<4:0> transitions from '00000' to '01111'.

TABLE 39-17: FIXED VOLTAGE REFERENCE (FVR) SPECIFICATIONS

Standard Operating Conditions (unless otherwise stated)							
Param. No.	**Symbol**	**Characteristic**	**Min.**	**Typ.**	**Max.**	**Units**	**Conditions**
FVR01	V_{FVR1}	1x Gain (1.024V)	-4	—	+4	%	$V_{DD} \geq 2.5V$, -40°C to 85°C
FVR02	V_{FVR2}	2x Gain (2.048V)	-4	—	+4	%	$V_{DD} \geq 2.5V$, -40°C to 85°C
FVR03	V_{FVR4}	4x Gain (4.096V)	-5	—	+5	%	$V_{DD} \geq 4.75V$, -40°C to 85°C
FVR04	T_{FVRST}	FVR Start-up Time	—	25	—	us	
FVR05	FVRA1x/FVRC1x	FVR output voltage for 1x setting stored in the DIA	—	1024	—	mV	
FVR06	FVRA2x/FVRC2x	FVR output voltage for 2x setting stored in the DIA	—	2048	—	mV	
FVR07	FVRA4x/FVRC4x	FVR output voltage for 4x setting stored in the DIA	—	4096	—	mV	
FVR08	VFVR_LCD	3x Gain for LCD voltage reference.	—	3072	—	mV	$V_{DD} \geq 3.3V$, -40°C to 85°C

TABLE 39-18: ZERO-CROSS DETECT (ZCD) SPECIFICATIONS

Standard Operating Conditions (unless otherwise stated) V_{DD} = 3.0V, T_A = 25°C							
Param. No.	**Sym.**	**Characteristics**	**Min.**	**Typ†**	**Max.**	**Units**	**Comments**
ZC01	V_{PINZC}	Voltage on Zero-Cross Pin	—	0.75	1.25	V	
ZC02	I_{ZCD_MAX}	Maximum source or sink current	—	—	600	μA	
ZC03	T_{RESPH}	Response Time, Rising Edge	—	1	—	μs	
	T_{RESPL}	Response Time, Falling Edge	—	1	—	μs	

† Data in “Typ” column is at 3.0V, 25°C unless otherwise stated. These parameters are for design guidance only and are not tested.

FIGURE 39-12: TIMER0 AND TIMER1 EXTERNAL CLOCK TIMINGS

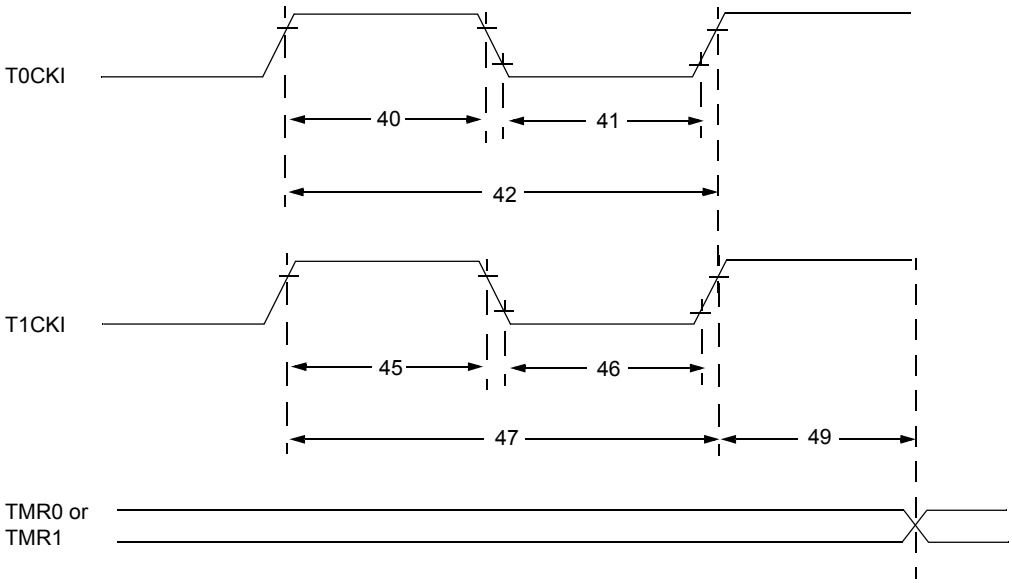

TABLE 39-19: TIMER0 AND TIMER1 EXTERNAL CLOCK REQUIREMENTS

Standard Operating Conditions (unless otherwise stated) Operating Temperature -40°C ≤ TA ≤ +125°C								
Param. No.	**Sym.**	**Characteristic**		**Min.**	**Typ†**	**Max.**	**Units**	**Conditions**
40*	TT0H	T0CKI High Pulse Width	No Prescaler	0.5 TCY + 20	—	—	ns	
			With Prescaler	10	—	—	ns	
41*	TT0L	T0CKI Low Pulse Width	No Prescaler	0.5 TCY + 20	—	—	ns	
			With Prescaler	10	—	—	ns	
42*	TT0P	T0CKI Period		Greater of: 20 or $\frac{T_{CY} + 40}{N}$	—	—	ns	N = prescale value
45*	TT1H	T1CKI High Time	Synchronous, No Prescaler	0.5 TCY + 20	—	—	ns	
			Synchronous, with Prescaler	15	—	—	ns	
			Asynchronous	30	—	—	ns	
46*	TT1L	T1CKI Low Time	Synchronous, No Prescaler	0.5 TCY + 20	—	—	ns	
			Synchronous, with Prescaler	15	—	—	ns	
			Asynchronous	30	—	—	ns	
47*	TT1P	T1CKI Input Period	Synchronous	Greater of: 30 or $\frac{T_{CY} + 40}{N}$	—	—	ns	N = prescale value
			Asynchronous	60	—	—	ns	
48	FT1	Secondary Oscillator Input Frequency Range (oscillator enabled by setting bit T1OSCEN)		32.4	32.768	33.1	kHz	
49*	TCKEZTMR1	Delay from External Clock Edge to Timer Increment		2 TOSC	—	7 TOSC	—	Timers in Sync mode

* These parameters are characterized but not tested.

† Data in “Typ” column is at 3.0V, 25°C unless otherwise stated. These parameters are for design guidance only and are not tested.

FIGURE 39-13: CAPTURE/COMPARE/PWM TIMINGS (CCP)

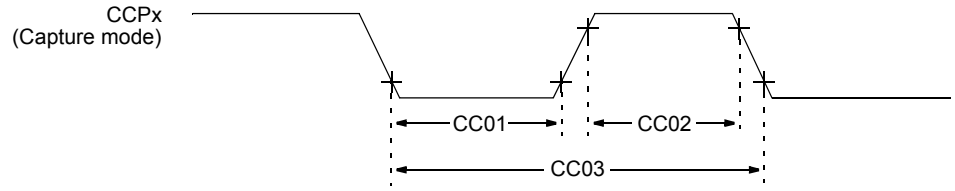

Note: Refer to Figure 39-4 for load conditions.

TABLE 39-20: CAPTURE/COMPARE/PWM REQUIREMENTS (CCP)

Standard Operating Conditions (unless otherwise stated) Operating Temperature -40°C ≤ TA ≤ +125°C								
Param. No.	**Sym.**	**Characteristic**		**Min.**	**Typ†**	**Max.**	**Units**	**Conditions**
CC01*	TccL	CCPx Input Low Time	No Prescaler	0.5TCY + 20	—	—	ns	
			With Prescaler	20	—	—	ns	
CC02*	TccH	CCPx Input High Time	No Prescaler	0.5TCY + 20	—	—	ns	
			With Prescaler	20	—	—	ns	
CC03*	TccP	CCPx Input Period		$\frac{3T_{CY} + 40}{N}$	—	—	ns	N = prescale value

* These parameters are characterized but not tested.

† Data in “Typ” column is at 3.0V, 25°C unless otherwise stated. These parameters are for design guidance only and are not tested.

FIGURE 39-14: CLC PROPAGATION TIMING

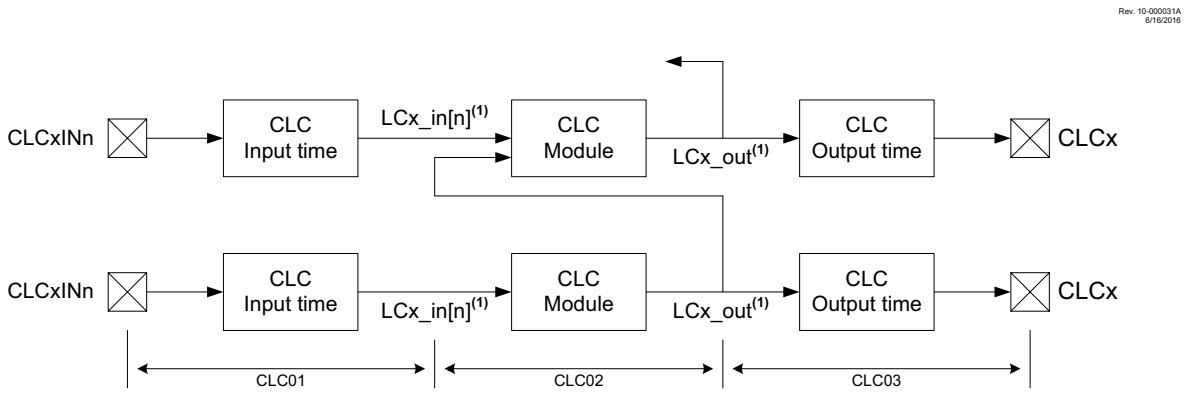

Note 1: See Figure 32-1 to identify specific CLC signals.

TABLE 39-21: CONFIGURABLE LOGIC CELL (CLC) CHARACTERISTICS

Standard Operating Conditions (unless otherwise stated) Operating temperature -40°C ≤ TA ≤ +125°C							
Param. No.	**Sym.**	**Characteristic**	**Min.**	**Typ†**	**Max.**	**Units**	**Conditions**
CLC01*	TCLCIN	CLC input time	—	7	IO5	ns	**(Note 1)**
CLC02*	TCLC	CLC module input to output propagation time	— —	24 12	— —	ns ns	VDD = 1.8V VDD > 3.6V
CLC03*	TCLCOUT	CLC output time Rise Time	—	IO7	—	—	**(Note 1)**
		Fall Time	—	IO8	—	—	**(Note 1)**
CLC04*	FCLCMAX	CLC maximum switching frequency	—	32	FOSC	MHz	

* These parameters are characterized but not tested.

† Data in "Typ" column is at 3.0V, 25°C unless otherwise stated. These parameters are for design guidance only and are not tested.

Note 1: See Table 39-10 for IO5, IO7 and IO8 rise and fall times.

FIGURE 39-15: EUSART SYNCHRONOUS TRANSMISSION (MASTER/SLAVE) TIMING

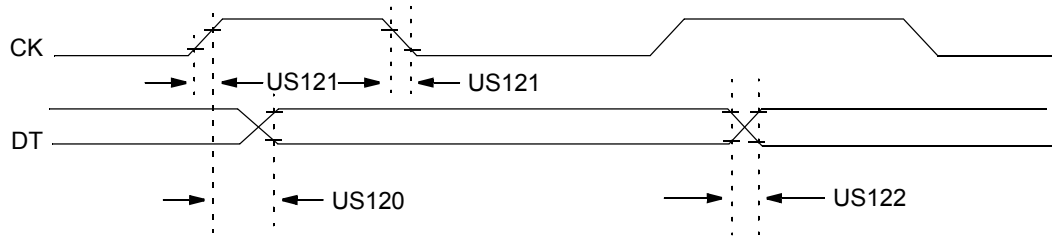

Note: Refer to Figure 39-4 for load conditions.

TABLE 39-22: EUSART SYNCHRONOUS TRANSMISSION CHARACTERISTICS

Standard Operating Conditions (unless otherwise stated)						
Param. No.	**Symbol**	**Characteristic**	**Min.**	**Max.**	**Units**	**Conditions**
US120	TCKH2DTV	SYNC XMIT (Master and Slave) Clock high to data-out valid	—	80	ns	3.0V ≤ VDD ≤ 5.5V
			—	100	ns	1.8V ≤ VDD ≤ 5.5V
US121	TCKRF	Clock out rise time and fall time (Master mode)	—	45	ns	3.0V ≤ VDD ≤ 5.5V
			—	50	ns	1.8V ≤ VDD ≤ 5.5V
US122	TDTRF	Data-out rise time and fall time	—	45	ns	3.0V ≤ VDD ≤ 5.5V
			—	50	ns	1.8V ≤ VDD ≤ 5.5V

FIGURE 39-16: EUSART SYNCHRONOUS RECEIVE (MASTER/SLAVE) TIMING

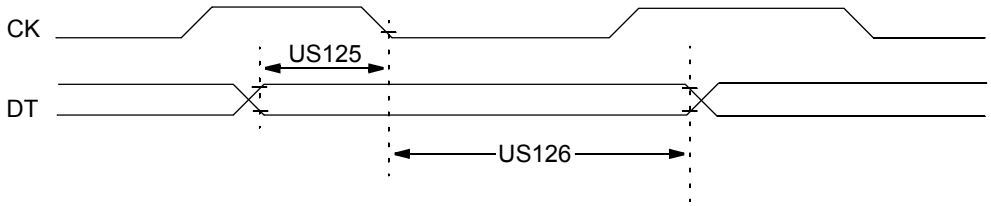

Note: Refer to Figure 39-4 for load conditions.

TABLE 39-23: EUSART SYNCHRONOUS RECEIVE REQUIREMENTS

Standard Operating Conditions (unless otherwise stated)						
Param. No.	**Symbol**	**Characteristic**	**Min.**	**Max.**	**Units**	**Conditions**
US125	TDTV2CKL	SYNC RCV (Master and Slave) Data-setup before CK ↓ (DT hold time)	10	—	ns	
US126	TCKL2DTL	Data-hold after CK ↓ (DT hold time)	15	—	ns	

FIGURE 39-17: SPI MASTER MODE TIMING (CKE = 0, SMP = 0)

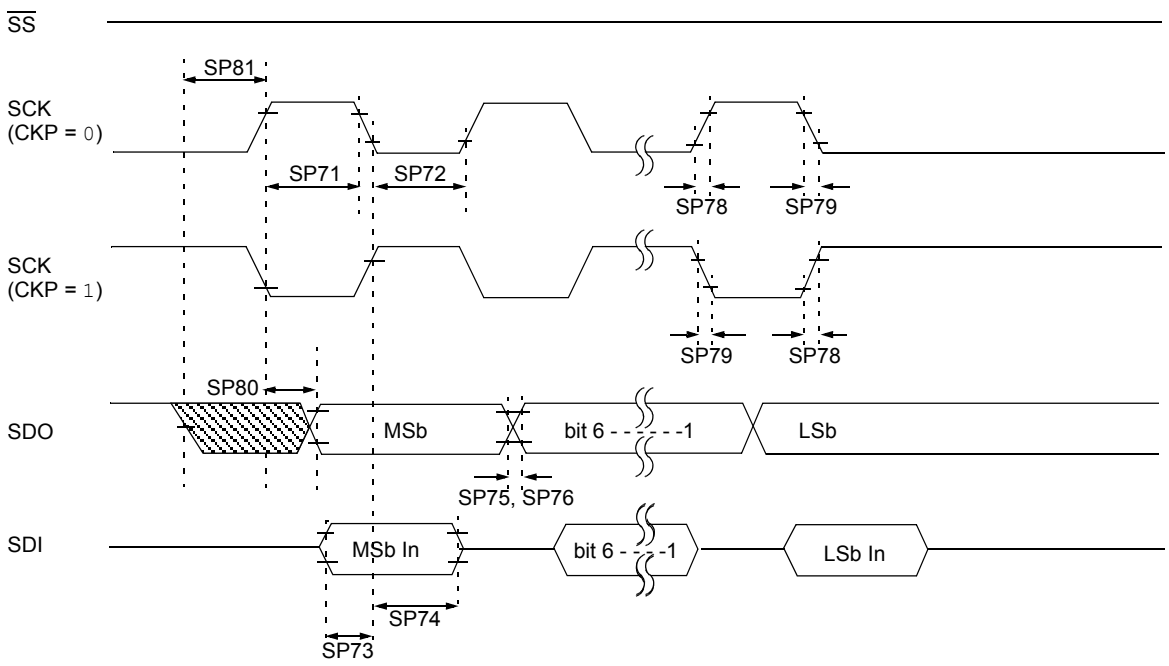

Note: Refer to Figure 39-4 for load conditions.

FIGURE 39-18: SPI MASTER MODE TIMING (CKE = 1, SMP = 1)

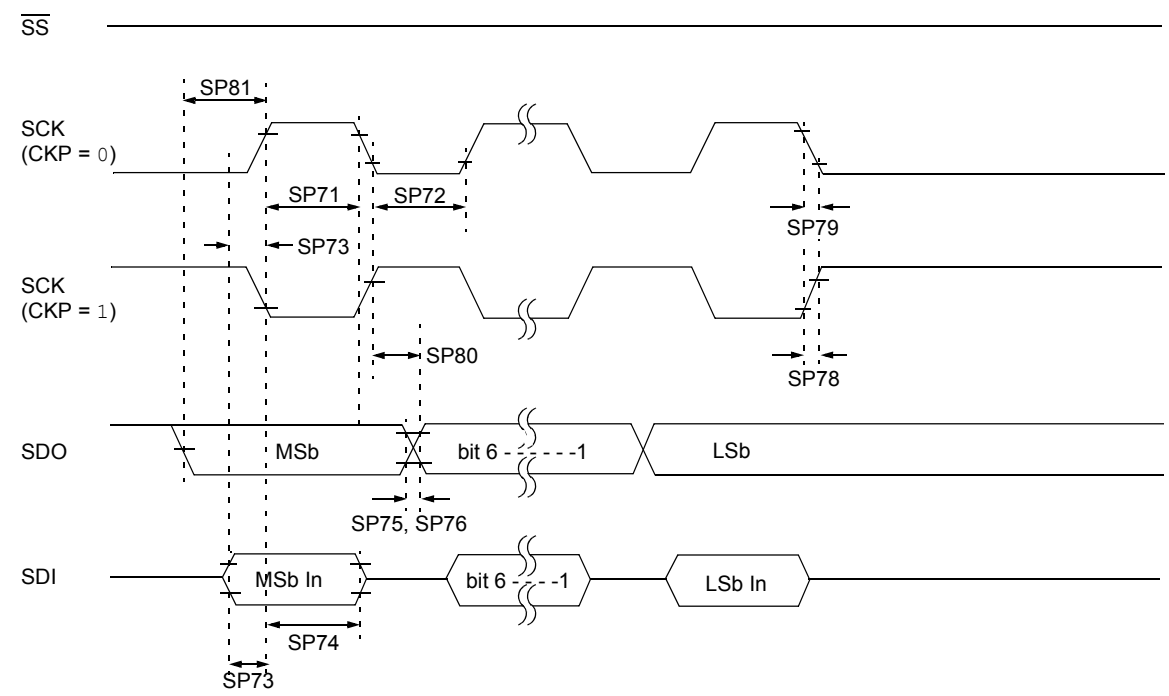

Note: Refer to Figure 39-4 for load conditions.

FIGURE 39-19: SPI SLAVE MODE TIMING (CKE = 0)

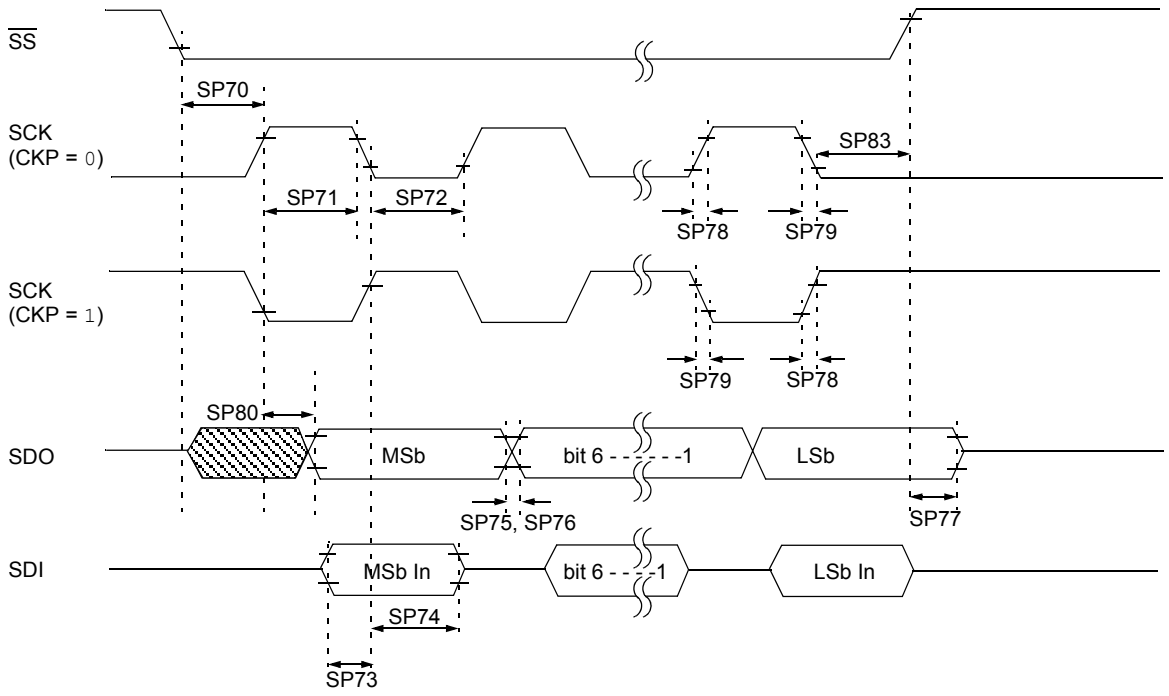

Note: Refer to Figure 39-4 for load conditions.

FIGURE 39-20: SPI SLAVE MODE TIMING (CKE = 1)

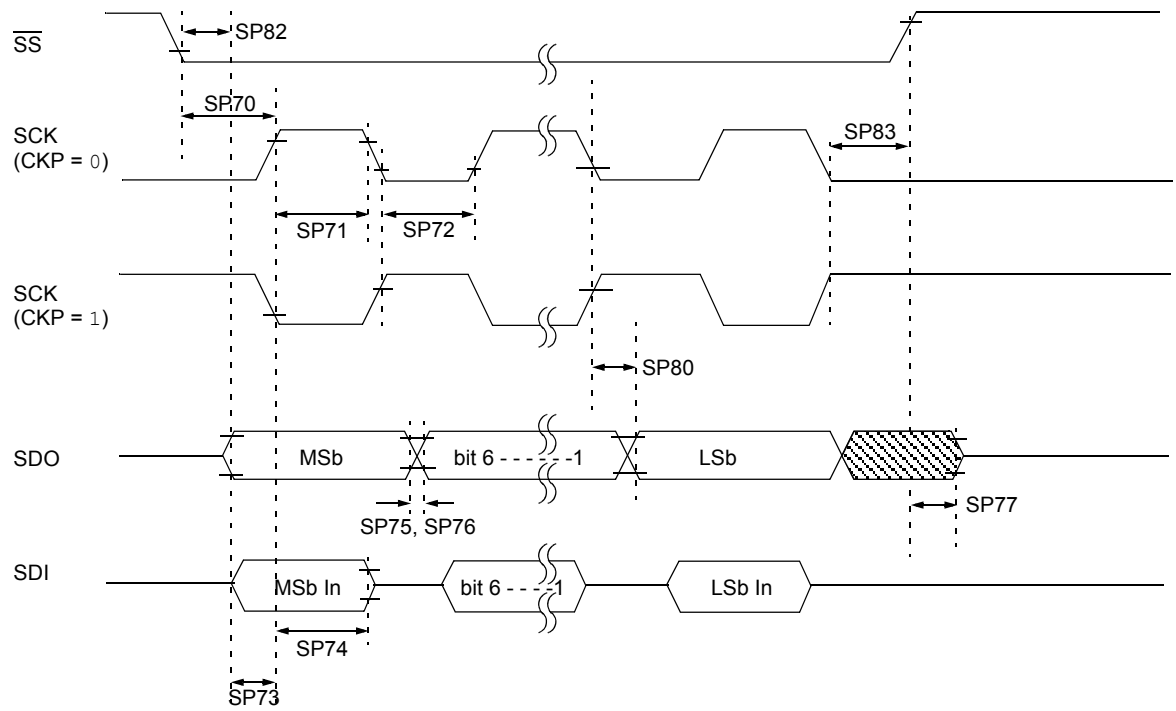

Note: Refer to Figure 39-4 for load conditions.

TABLE 39-24: SPI MODE REQUIREMENTS

Standard Operating Conditions (unless otherwise stated)							
Param. No.	**Symbol**	**Characteristic**	**Min.**	**Typ†**	**Max.**	**Units**	**Conditions**
SP70*	TssL2scH, TssL2scL	$\overline{SS}$↓ to SCK↓ or SCK↑ input	2.25*Tcy	—	—	ns	
SP71*	TscH	SCK input high time (Slave mode)	Tcy + 20	—	—	ns	
SP72*	TscL	SCK input low time (Slave mode)	Tcy + 20	—	—	ns	
SP73*	TdiV2scH, TdiV2scL	Setup time of SDI data input to SCK edge	100	—	—	ns	
SP74*	TscH2diL, TscL2diL	Hold time of SDI data input to SCK edge	100	—	—	ns	
SP75*	TdoR	SDO data output rise time	—	10	25	ns	3.0V ≤ VDD ≤ 5.5V
			—	25	50	ns	1.8V ≤ VDD ≤ 5.5V
SP76*	TdoF	SDO data output fall time	—	10	25	ns	
SP77*	TssH2doZ	$\overline{SS}$↑ to SDO output high-impedance	10	—	50	ns	
SP78*	TscR	SCK output rise time (Master mode)	—	10	25	ns	3.0V ≤ VDD ≤ 5.5V
			—	25	50	ns	1.8V ≤ VDD ≤ 5.5V
SP79*	TscF	SCK output fall time (Master mode)	—	10	25	ns	
SP80*	TscH2doV, TscL2doV	SDO data output valid after SCK edge	—	—	50	ns	3.0V ≤ VDD ≤ 5.5V
			—	—	145	ns	1.8V ≤ VDD ≤ 5.5V
SP81*	TdoV2scH, TdoV2scL	SDO data output setup to SCK edge	1 Tcy	—	—	ns	
SP82*	TssL2doV	SDO data output valid after $\overline{SS}$↓ edge	—	—	50	ns	
SP83*	TscH2ssH, TscL2ssH	$\overline{SS}$ ↑ after SCK edge	1.5 Tcy + 40	—	—	ns	

* These parameters are characterized but not tested.

† Data in “Typ” column is at 3.0V, 25°C unless otherwise stated. These parameters are for design guidance only and are not tested.

FIGURE 39-21: I²C BUS START/STOP BITS TIMING

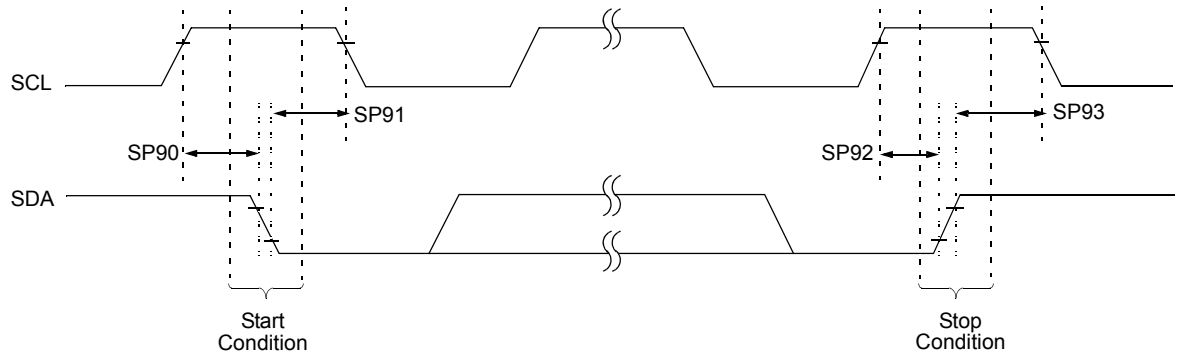

Note: Refer to Figure 39-4 for load conditions.

TABLE 39-25: I²C BUS START/STOP BITS REQUIREMENTS

Standard Operating Conditions (unless otherwise stated)								
Param. No.	**Symbol**	**Characteristic**		**Min.**	**Typ**	**Max.**	**Units**	**Conditions**
SP90*	TSU:STA	Start condition Setup time	100 kHz mode	4700	—	—	ns	Only relevant for Repeated Start condition
			400 kHz mode	600	—	—		
SP91*	THD:STA	Start condition Hold time	100 kHz mode	4000	—	—	ns	After this period, the first clock pulse is generated
			400 kHz mode	600	—	—		
SP92*	TSU:STO	Stop condition Setup time	100 kHz mode	4700	—	—	ns	
			400 kHz mode	600	—	—		
SP93	THD:STO	Stop condition Hold time	100 kHz mode	4000	—	—	ns	
			400 kHz mode	600	—	—		

* These parameters are characterized but not tested.

FIGURE 39-22: I²C BUS DATA TIMING

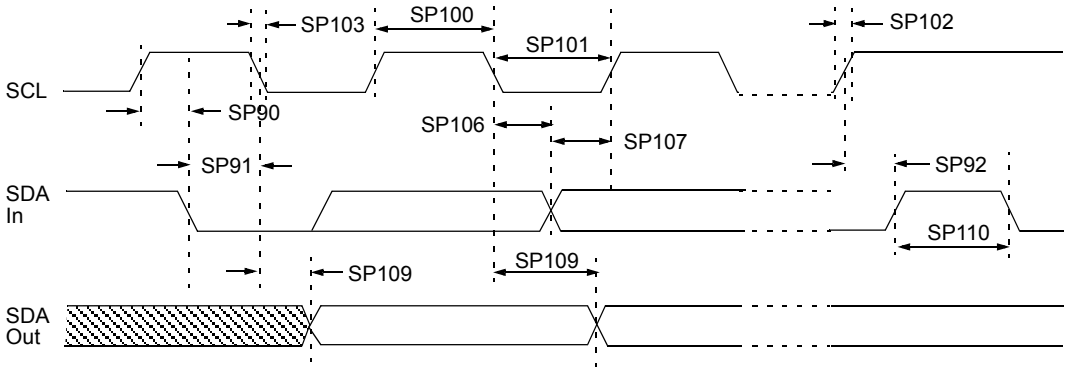

Note: Refer to Figure 39-4 for load conditions.

TABLE 39-26: I²C BUS DATA REQUIREMENTS

Standard Operating Conditions (unless otherwise stated)							
Param. No.	**Symbol**	**Characteristic**		**Min.**	**Max.**	**Units**	**Conditions**
SP100*	THIGH	Clock high time	100 kHz mode	4.0	—	μs	Device must operate at a minimum of 1.5 MHz
			400 kHz mode	0.6	—	μs	Device must operate at a minimum of 10 MHz
			SSP module	1.5TCY	—		
SP101*	TLOW	Clock low time	100 kHz mode	4.7	—	μs	Device must operate at a minimum of 1.5 MHz
			400 kHz mode	1.3	—	μs	Device must operate at a minimum of 10 MHz
			SSP module	1.5TCY	—		
SP102*	TR	SDA and SCL rise time	100 kHz mode	—	1000	ns	
			400 kHz mode	20 + 0.1CB	300	ns	CB is specified to be from 10-400 pF
SP103*	TF	SDA and SCL fall time	100 kHz mode	—	250	ns	
			400 kHz mode	20 + 0.1CB	250	ns	CB is specified to be from 10-400 pF
SP106*	THD:DAT	Data input hold time	100 kHz mode	0	—	ns	
			400 kHz mode	0	0.9	μs	
SP107*	TSU:DAT	Data input setup time	100 kHz mode	250	—	ns	**(Note 2)**
			400 kHz mode	100	—	ns	
SP109*	TAA	Output valid from clock	100 kHz mode	—	3500	ns	**(Note 1)**
			400 kHz mode	—	—	ns	
SP110*	TBUF	Bus free time	100 kHz mode	4.7	—	μs	Time the bus must be free before a new transmission can start
			400 kHz mode	1.3	—	μs	
SP111	CB	Bus capacitive loading		—	400	pF	

* These parameters are characterized but not tested.

Note 1: As a transmitter, the device must provide this internal minimum delay time to bridge the undefined region (min. 300 ns) of the falling edge of SCL to avoid unintended generation of Start or Stop conditions.

2: A Fast mode (400 kHz) I²C bus device can be used in a Standard mode (100 kHz) I²C bus system, but the requirement TSU:DAT ≥ 250 ns must then be met. This will automatically be the case if the device does not stretch the low period of the SCL signal. If such a device does stretch the low period of the SCL signal, it must output the next data bit to the SDA line TR max. + TSU:DAT = 1000 + 250 = 1250 ns (according to the Standard mode I²C bus specification), before the SCL line is released.

40.0 DC AND AC CHARACTERISTICS GRAPHS AND CHARTS

The graphs and tables provided in this section are for **design guidance** and are **not tested**.

In some graphs or tables, the data presented are **outside specified operating range** (i.e., outside specified V_{DD} range). This is for **information only** and devices are ensured to operate properly only within the specified range.

Unless otherwise noted, all graphs apply to both the L and LF devices.

Note:	The graphs and tables provided following this note are a statistical summary based on a limited number of samples and are provided for informational purposes only. The performance characteristics listed herein are not tested or guaranteed. In some graphs or tables, the data presented may be outside the specified operating range (e.g., outside specified power supply range) and therefore, outside the warranted range.

"Typical" represents the mean of the distribution at 25°C. "Maximum", "Max.", "Minimum" or "Min." represents (mean + 3σ) or (mean - 3σ) respectively, where σ is a standard deviation, over each temperature range.

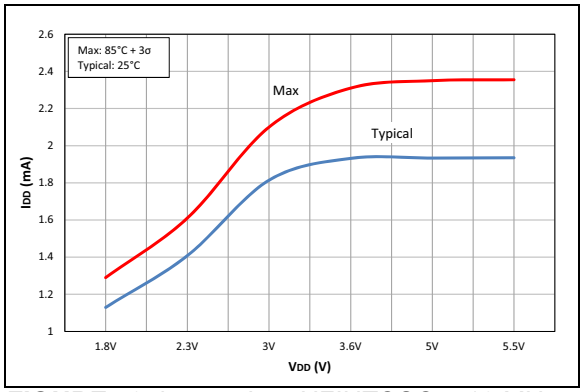

FIGURE 40-1: *IDD, HFINTOSC = 16 MHz, PIC16F19155/56/75/76/85/86 Only.*

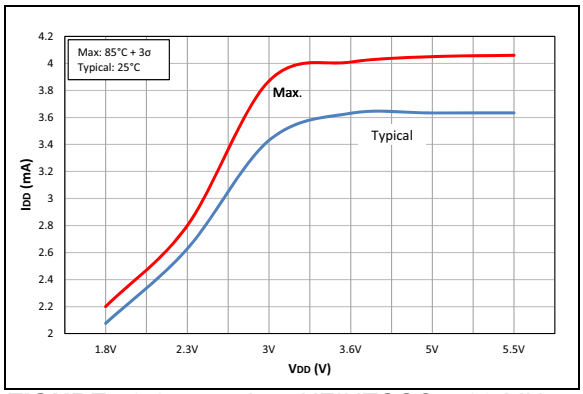

FIGURE 40-2: *IDD, HFINTOSC = 32 MHz with PLL, PIC16F19155/56/75/76/85/86 Only.*

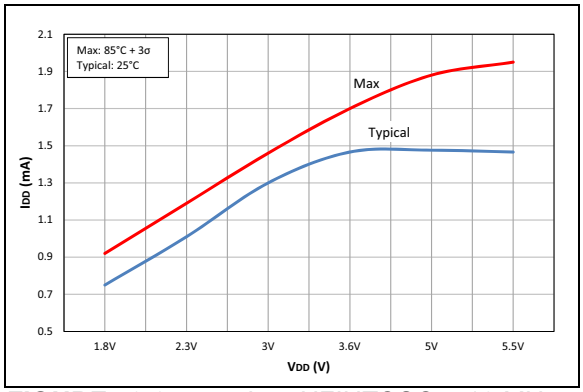

FIGURE 40-3: *IDD, HFINTOSC = 16 MHz, Doze Ratio = 16, PIC16F19155/56/75/76/85/86 Only.*

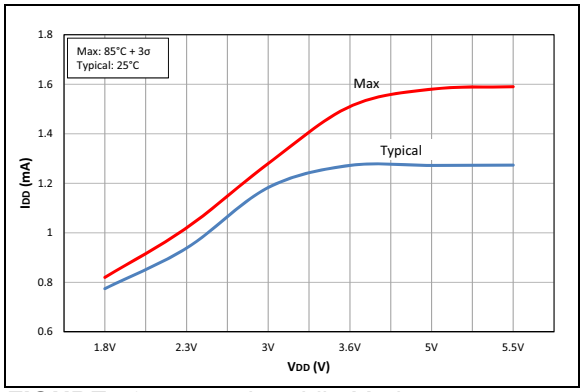

FIGURE 40-4: *IDD, Idle Mode, HFINTOSC = 16 MHz, PIC16F19155/56/75/76/85/86 Only.*

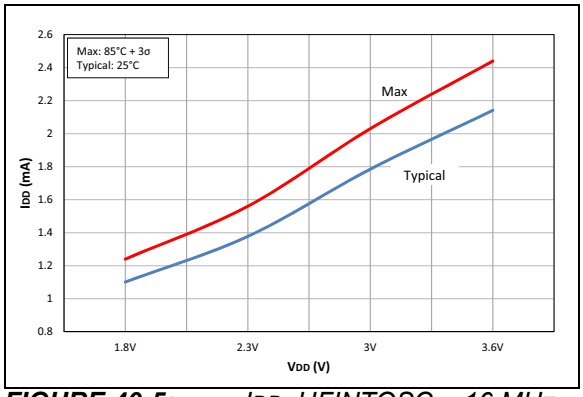

FIGURE 40-5: *IDD, HFINTOSC = 16 MHz, PIC16LF19155/56/75/76/85/86 Only.*

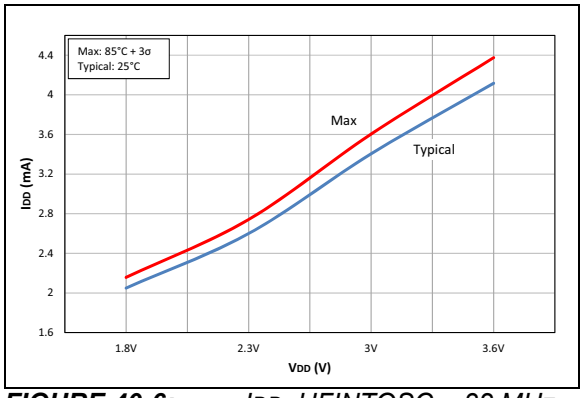

FIGURE 40-6: *IDD, HFINTOSC = 32 MHz with PLL, PIC16LF19155/56/75/76/85/86 Only.*

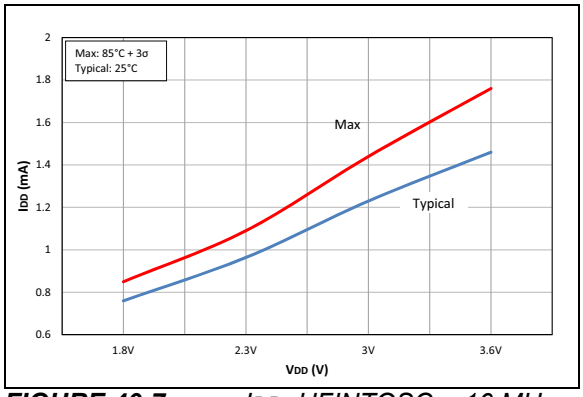

FIGURE 40-7: *IDD, HFINTOSC = 16 MHz, Doze Ratio = 16, PIC16LF19155/56/75/76/85/86 Only.*

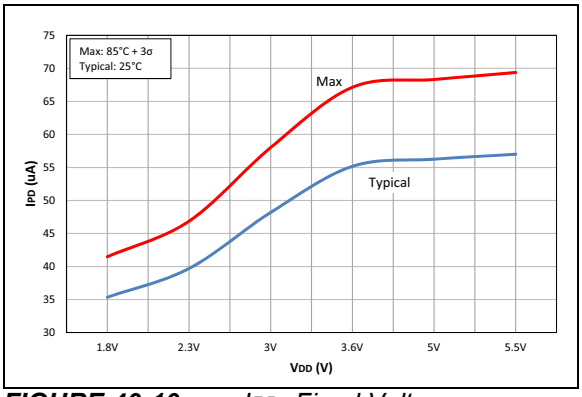

FIGURE 40-10: *IPD, Fixed Voltage Reference (FVR), PIC16F19155/56/75/76/85/86 Only.*

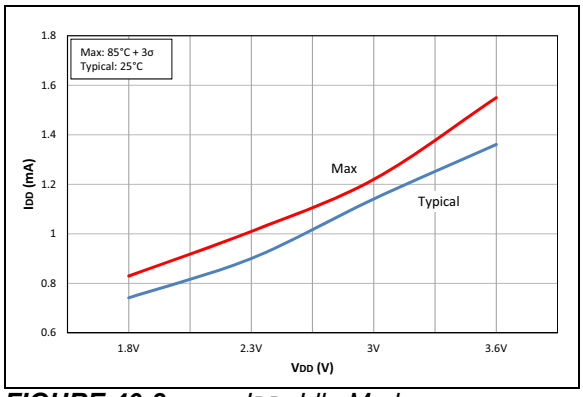

FIGURE 40-8: *IDD, Idle Mode, HFINTOSC = 16 MHz, PIC16LF19155/56/75/76/85/86 Only.*

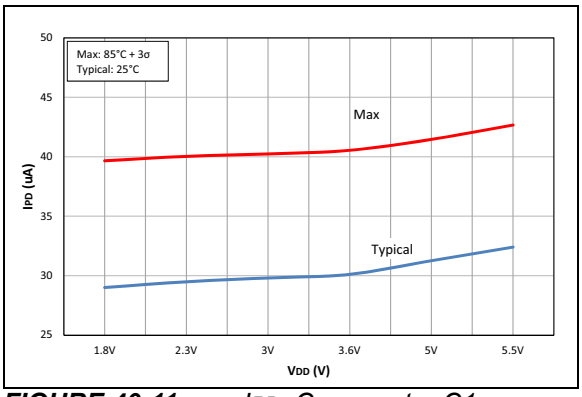

FIGURE 40-11: *IPD, Comparator C1, PIC16F19155/56/75/76/85/86 Only.*

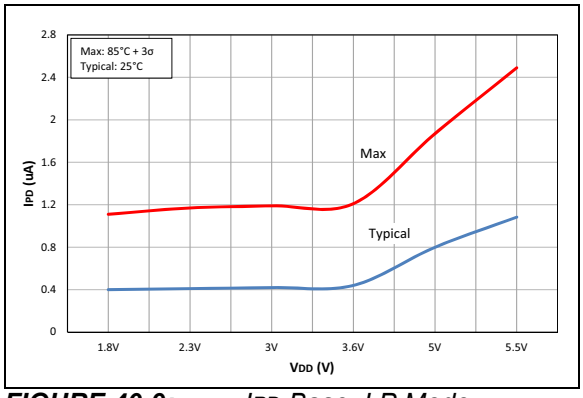

FIGURE 40-9: *IPD Base, LP Mode, PIC16F19155/56/75/76/85/86 Only.*

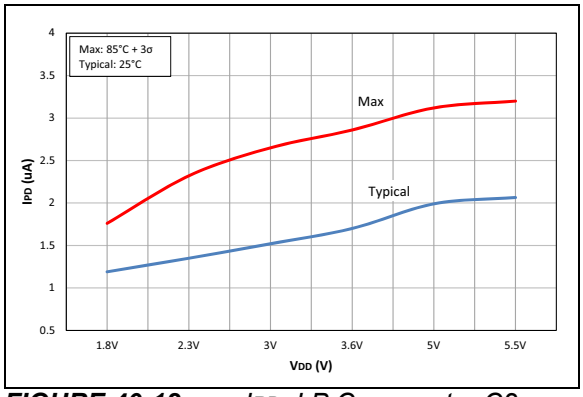

FIGURE 40-12: *IPD, LP Comparator C2, PIC16F19155/56/75/76/85/86 Only.*

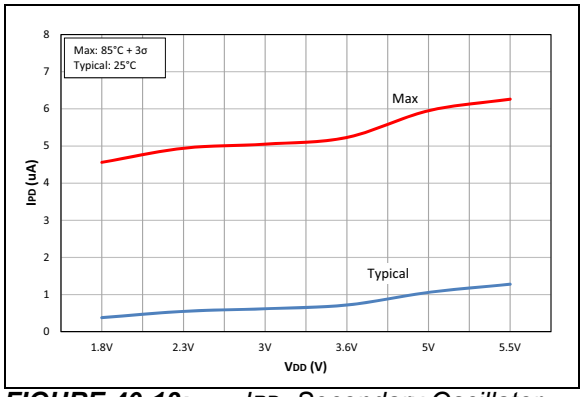

FIGURE 40-13: *IPD, Secondary Oscillator (SOSC), PIC16F19155/56/75/76/85/86 Only.*

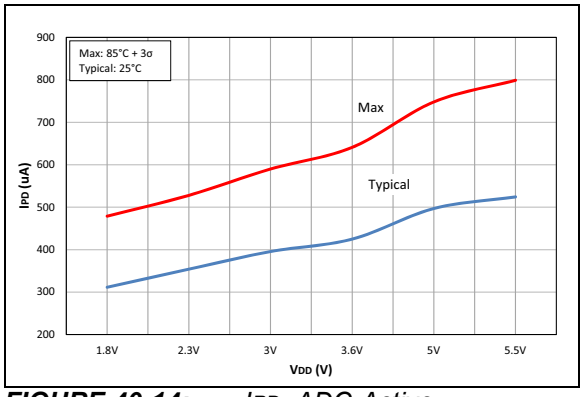

FIGURE 40-14: *IPD, ADC-Active, PIC16F19155/56/75/76/85/86 Only.*

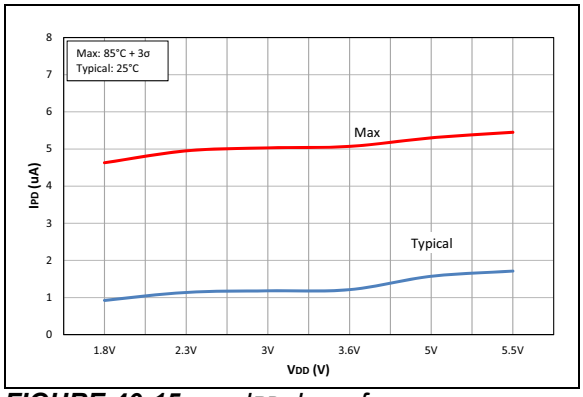

FIGURE 40-15: *IPD, Low_frequency Oscillator/WDT, PIC16F19155/56/75/76/85/86 Only.*

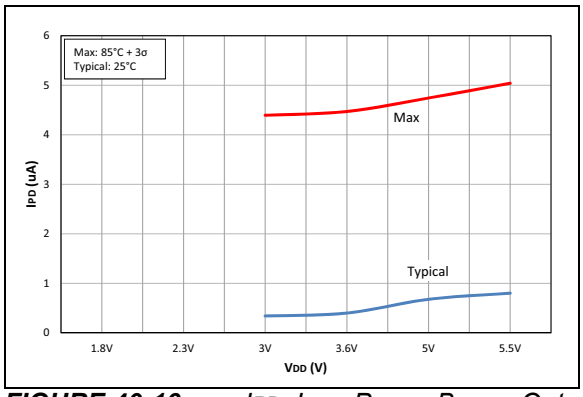

FIGURE 40-16: *IPD, Low-Power Brown-Out Reset (LPBOR), PIC16F19155/56/75/76/85/86 Only.*

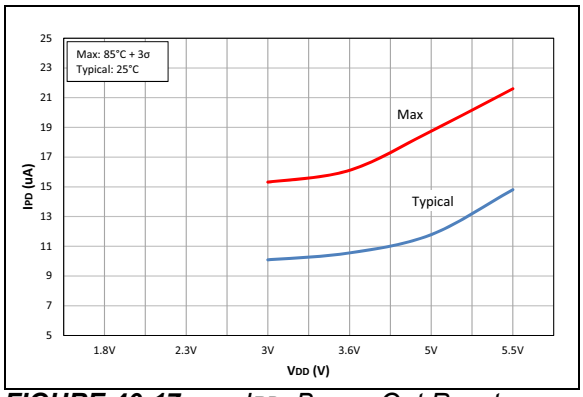

FIGURE 40-17: *IPD, Brown-Out Reset (BOR), PIC16F19155/56/75/76/85/86 Only.*

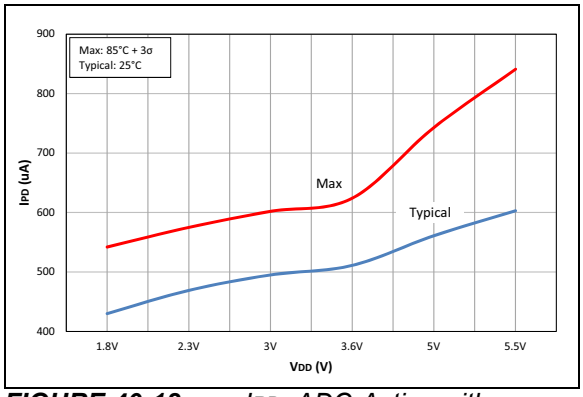

FIGURE 40-18: *IPD, ADC-Active with Charge Pump, PIC16F19155/56/75/76/85/86 Only.*

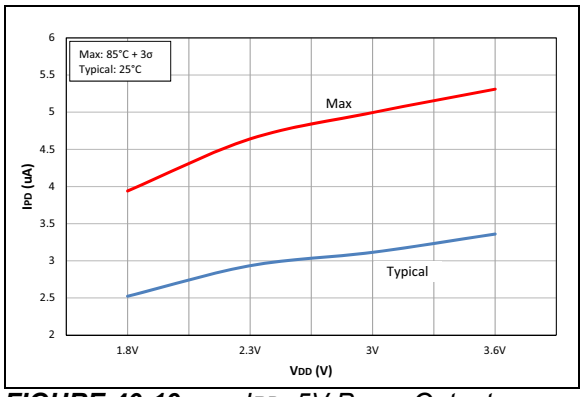

FIGURE 40-19: *IPD, 5V Pump Output, PIC16F19155/56/75/76/85/86 Only.*

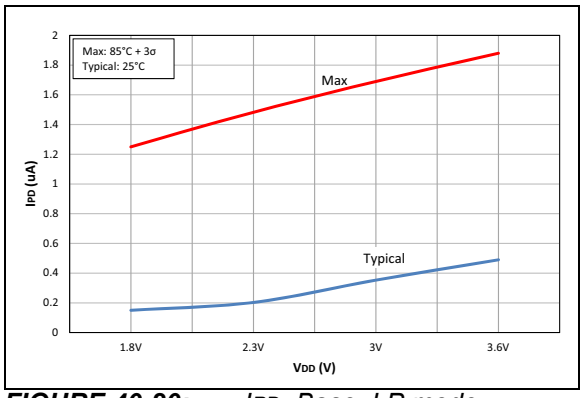

FIGURE 40-20: *IPD, Base, LP mode, PIC16LF19155/56/75/76/85/86 Only.*

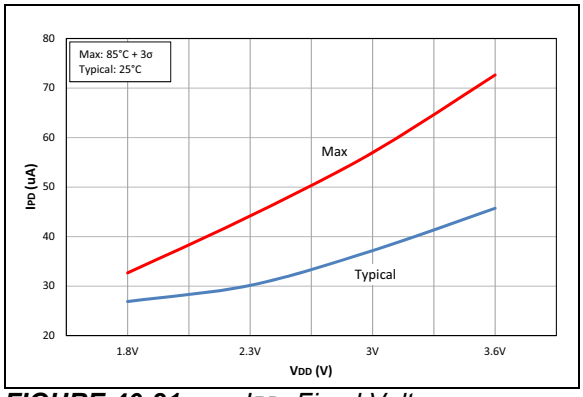

FIGURE 40-21: *IPD, Fixed Voltage Reference (FVR), PIC16LF19155/56/75/76/85/86 Only.*

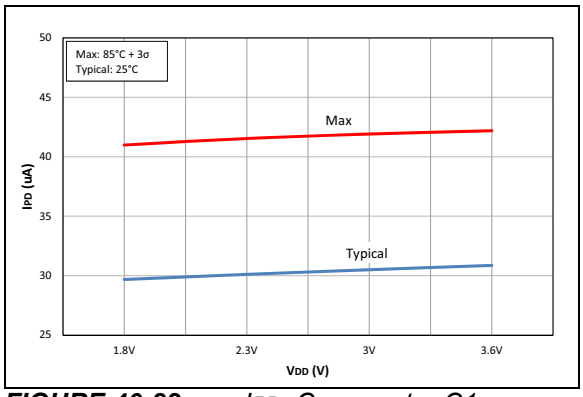

FIGURE 40-22: *IPD, Comparator C1, PIC16LF19155/56/75/76/85/86 Only.*

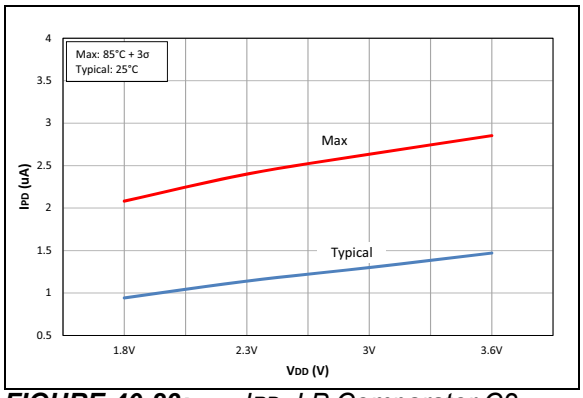

FIGURE 40-23: *IPD, LP Comparator C2, PIC16LF19155/56/75/76/85/86 Only.*

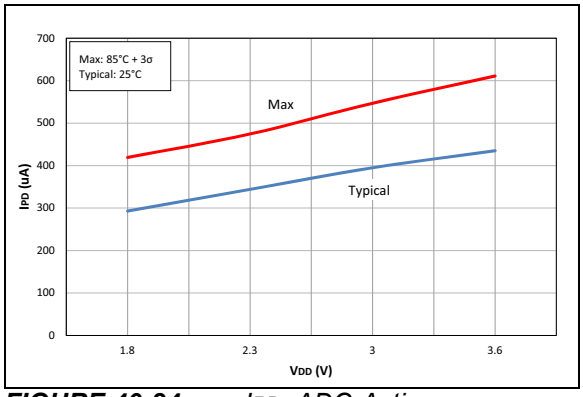

FIGURE 40-24: *IPD, ADC-Active, PIC16LF19155/56/75/76/85/86 Only.*

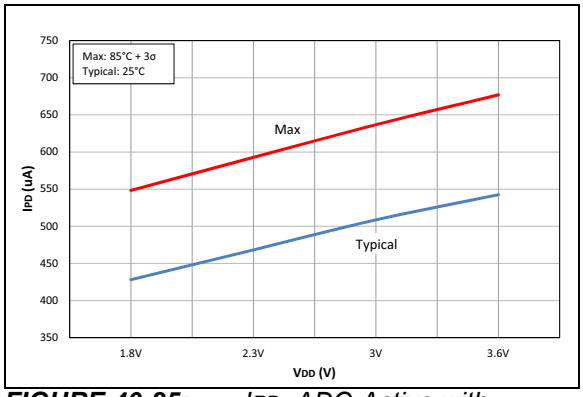

FIGURE 40-25: *IPD, ADC-Active with Charge Pump, PIC16LF19155/56/75/76/85/86 Only.*

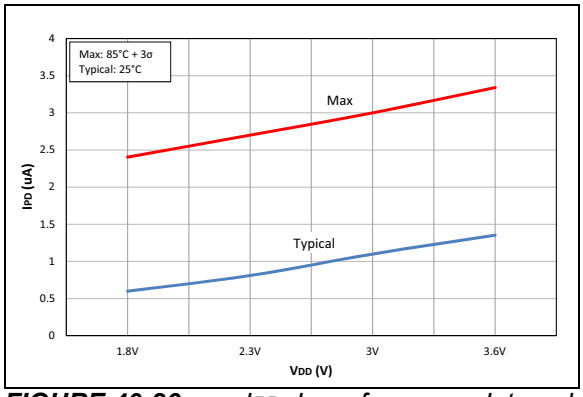

FIGURE 40-26: *IPD, Low_frequency Internal Oscillator/WDT, PIC16LF19155/56/75/76/85/86 Only*

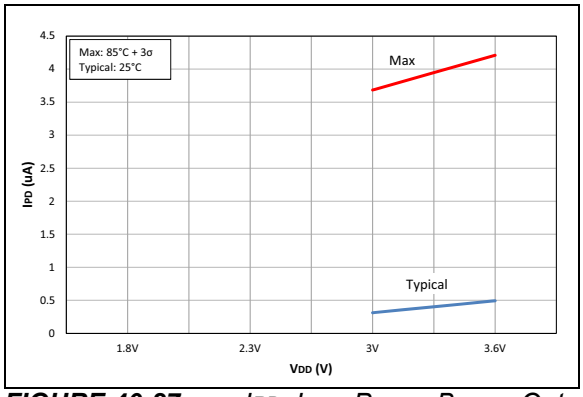

FIGURE 40-27: *IPD, Low-Power Brown-Out Reset (LPBOR), PIC16LF19155/56/75/76/85/86 Only.*

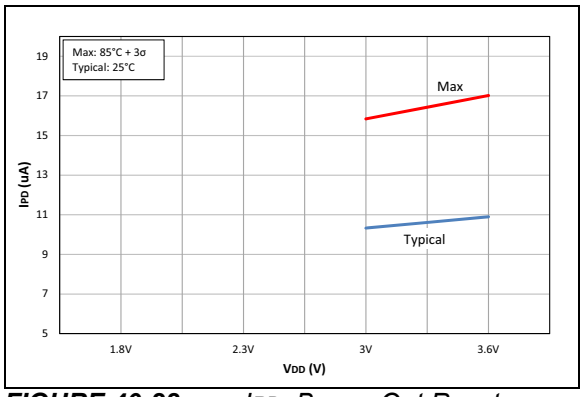

FIGURE 40-28: *IPD, Brown-Out Reset (BOR), PIC16LF19155/56/75/76/85/86 Only.*

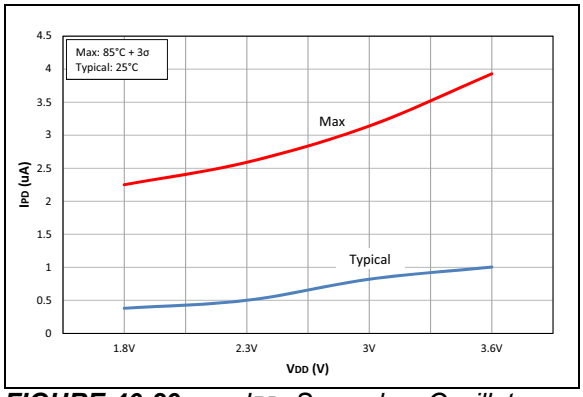

FIGURE 40-29: *IPD, Secondary Oscillator (SOSC), PIC16LF19155/56/75/76/85/86 Only.*

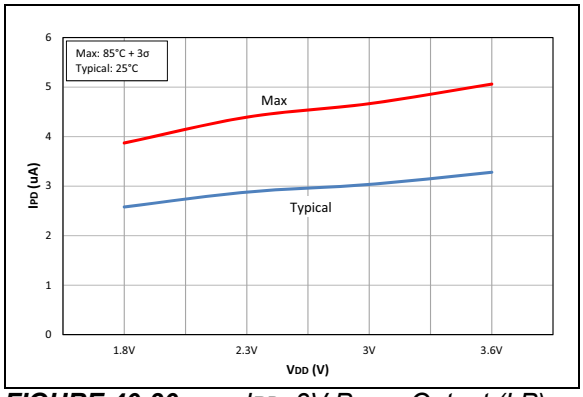

FIGURE 40-30: *IPD, 3V Pump Output (LP), PIC16LF19155/56/75/76/85/86 Only.*

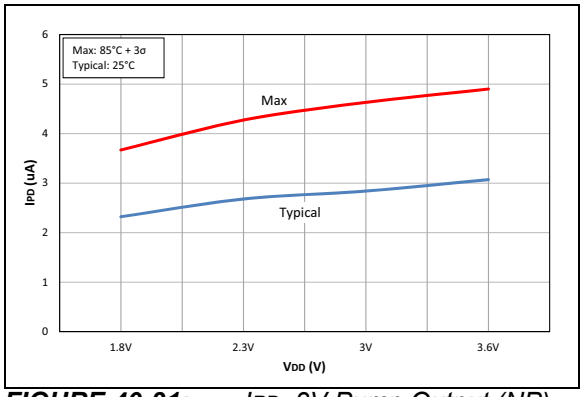

FIGURE 40-31: *IPD, 3V Pump Output (NP), PIC16LF19155/56/75/76/85/86 Only.*

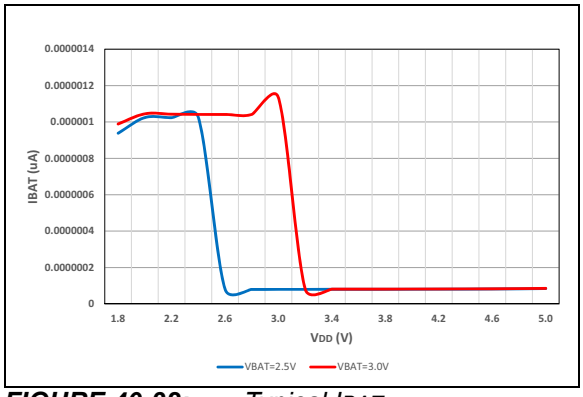

FIGURE 40-32: *Typical IBAT.*

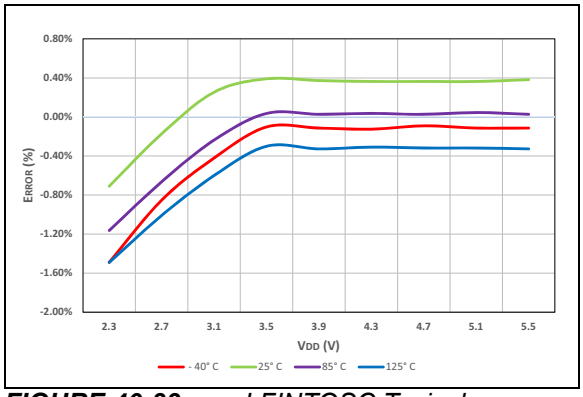

FIGURE 40-33: *LFINTOSC Typical Frequency Error, PIC16F19155/56/75/76/85/86 Only.*

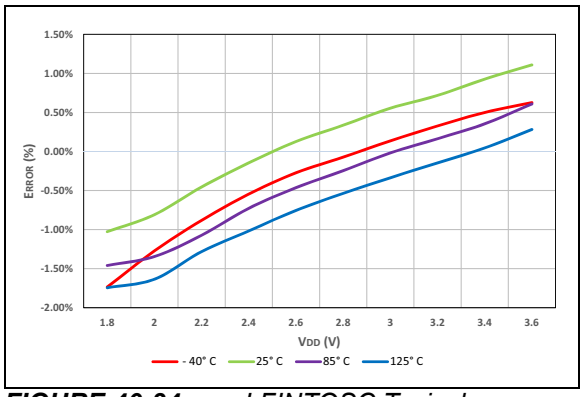

FIGURE 40-34: *LFINTOSC Typical Frequency Error, PIC16LF19155/56/75/76/85/86 Only.*

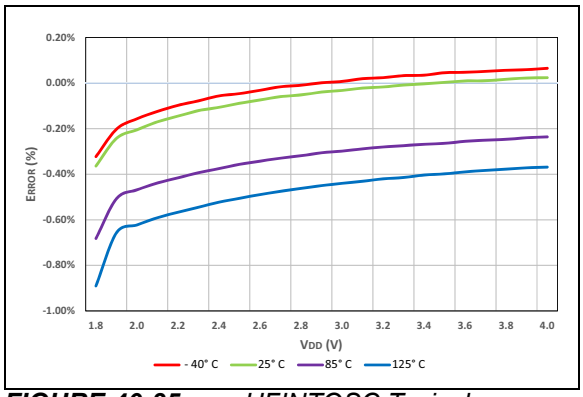

FIGURE 40-35: *HFINTOSC Typical Frequency Error, PIC16LF19155/56/75/76/85/86 Only.*

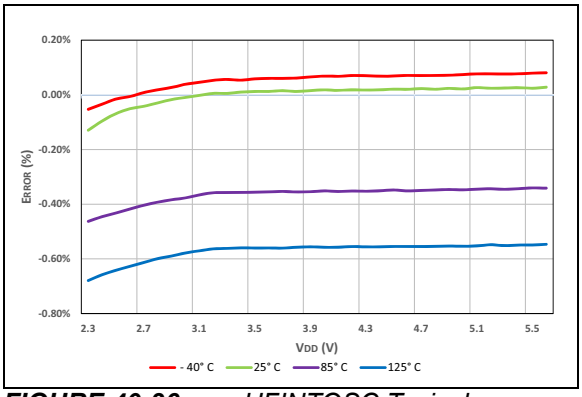

FIGURE 40-36: *HFINTOSC Typical Frequency Error, PIC16F19155/56/75/76/85/86 Only.*

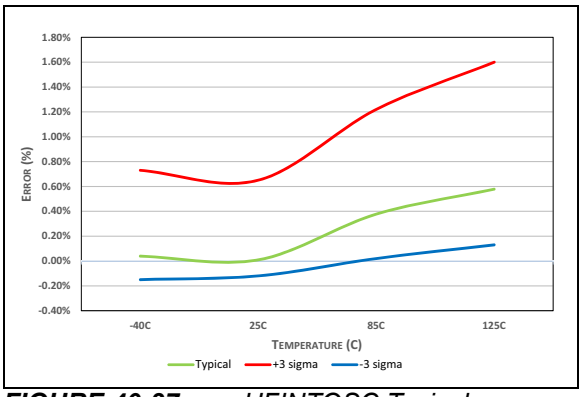

FIGURE 40-37: *HFINTOSC Typical Frequency Error vs. Temperature, VDD = 3V.*

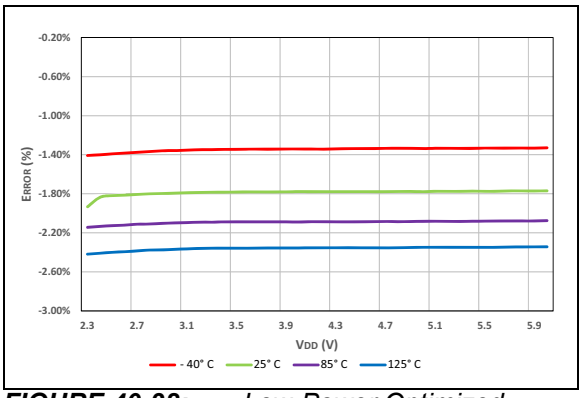

FIGURE 40-38: *Low-Power Optimized HFINTOSC Typical Frequency Error, PIC16F19155/56/75/76/85/86 Only.*

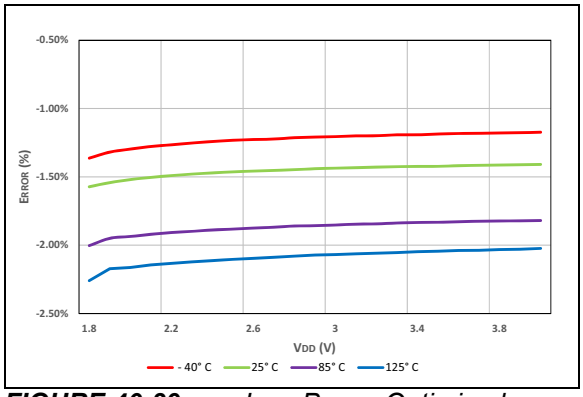

FIGURE 40-39: *Low-Power Optimized HFINTOSC Typical Frequency Error, PIC16LF19155/56/75/76/85/86 Only.*

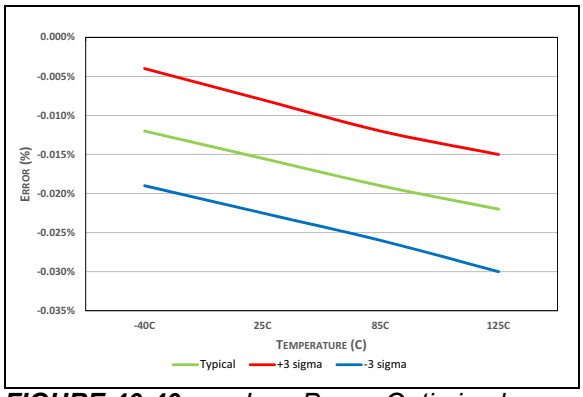

FIGURE 40-40: *Low-Power Optimized HFINTOSC Frequency Error, VDD = 3V.*

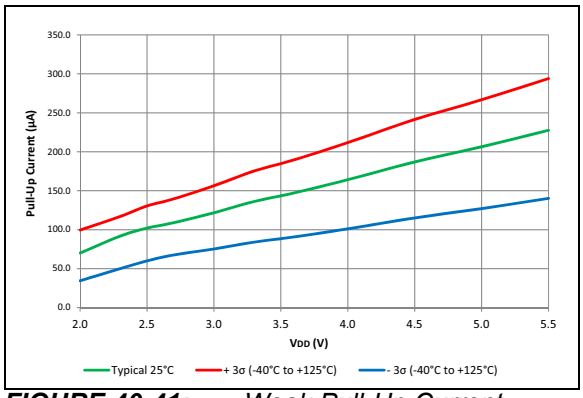

FIGURE 40-41: *Weak Pull-Up Current, PIC16F19155/56/75/76/85/86 Only.*

.

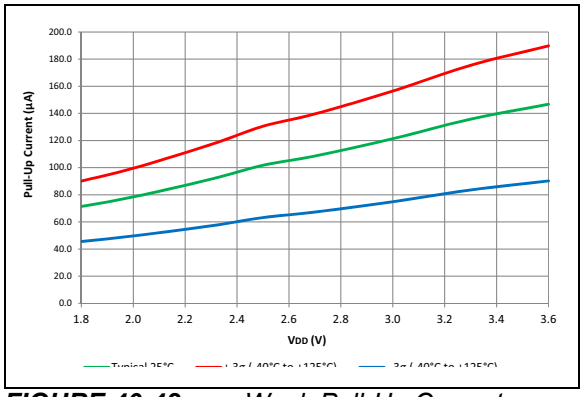

FIGURE 40-42: *Weak Pull-Up Current, PIC16LF19155/56/75/76/85/86 Only.*

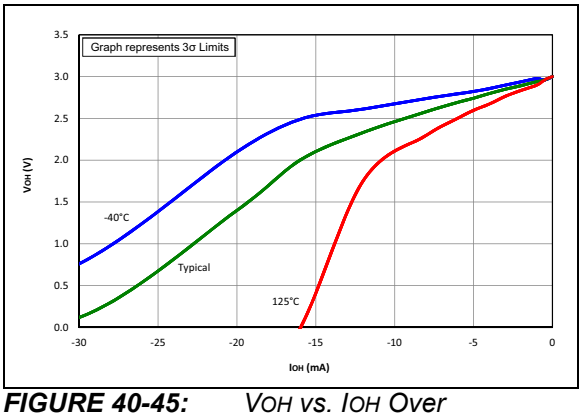

FIGURE 40-45: *VOH vs. IOH Over Temperature, VDD = 3.0V.*

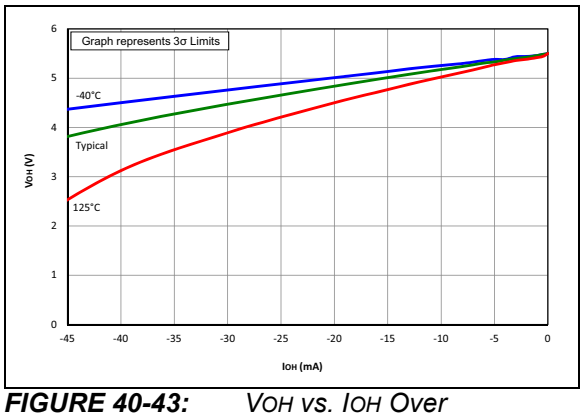

FIGURE 40-43: *VOH vs. IOH Over Temperature, VDD = 5.5V, PIC16F19155/56/75/76/85/86 Only.*

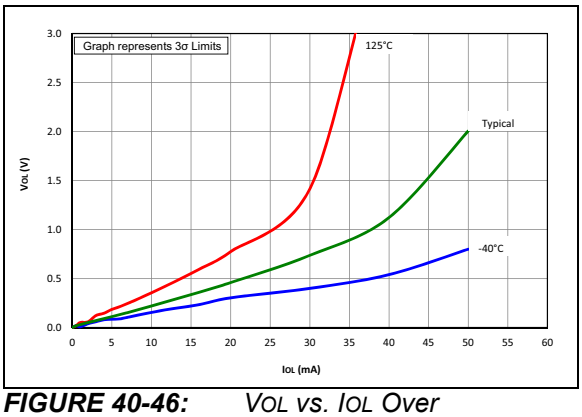

FIGURE 40-46: *VOL vs. IOL Over Temperature, VDD = 3.0V.*

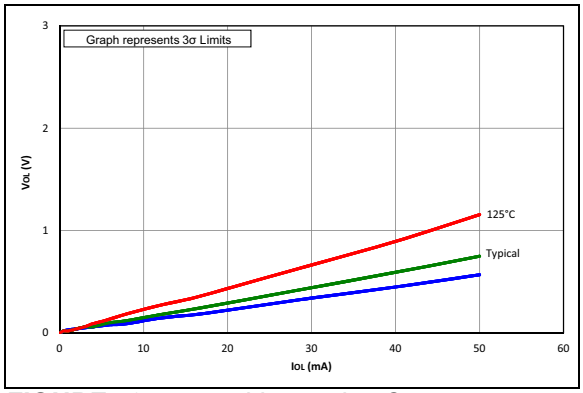

FIGURE 40-44: *VOL vs. IOL Over Temperature, VDD = 5.5V, PIC16F19155/56/75/76/85/86 Only.*

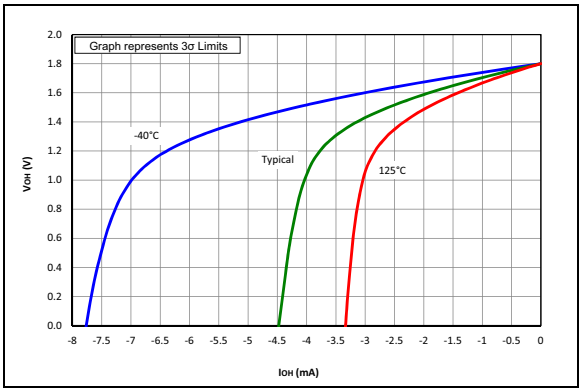

FIGURE 40-47: *VOH vs. IOH Over Temperature, VDD = 1.8V, PIC16LF19155/56/75/76/85/86 Only.*

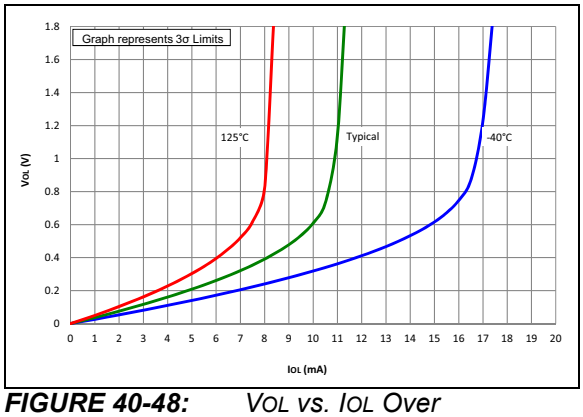

FIGURE 40-48: *VOL vs. IOL Over Temperature, VDD = 1.8V, PIC16LF19155/56/75/76/85/86 Only.*

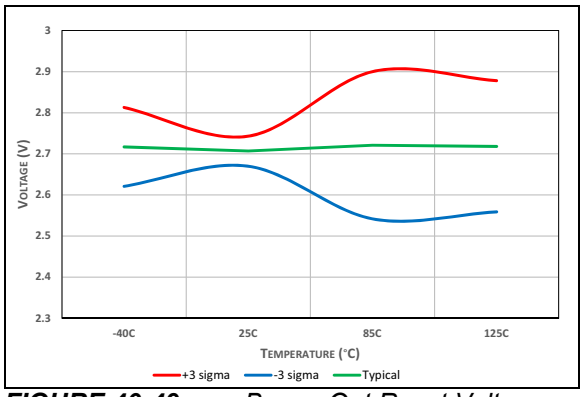

FIGURE 40-49: *Brown-Out Reset Voltage, Trip Point (BORV = 0).*

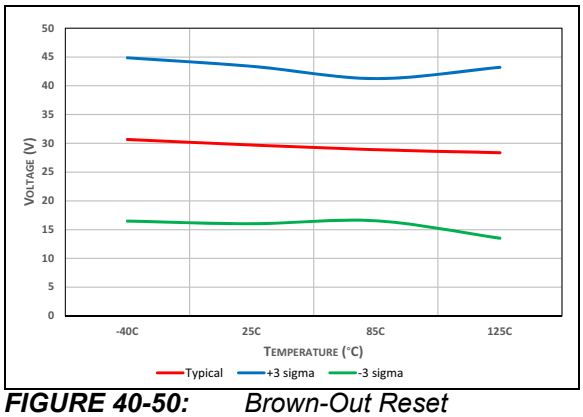

FIGURE 40-50: *Brown-Out Reset Hysteresis, Trip Point (BORV = 0), PIC16F19155/56/75/76/85/86 Only.*

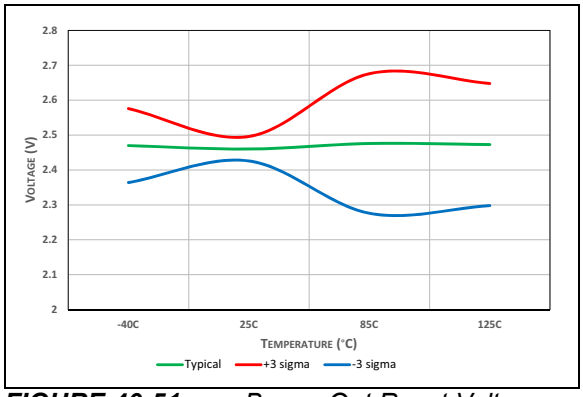

FIGURE 40-51: *Brown-Out Reset Voltage, Trip Point (BORV = 1), PIC16F19155/56/75/76/85/86 Only.*

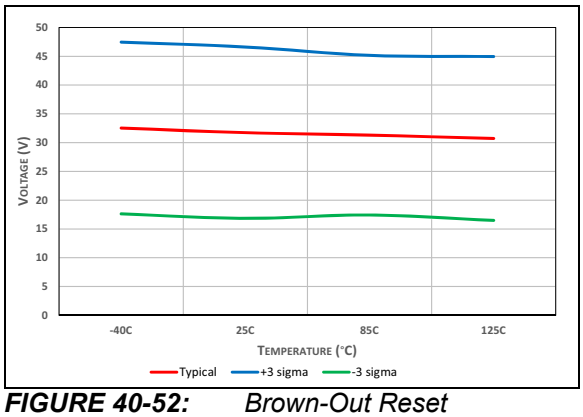

FIGURE 40-52: *Brown-Out Reset Hysteresis, Trip Point (BORV = 1).*

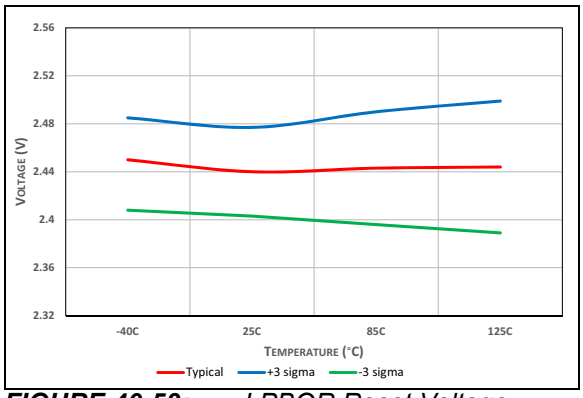

FIGURE 40-53: *LPBOR Reset Voltage.*

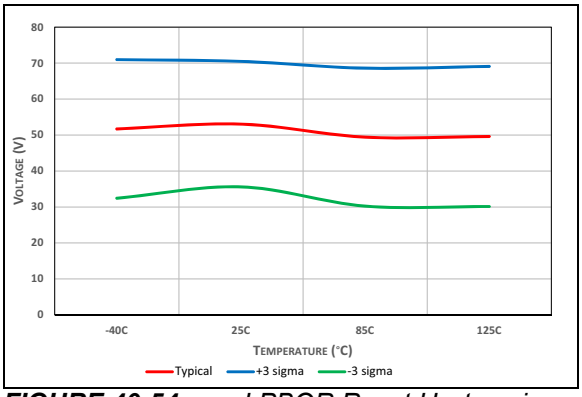

FIGURE 40-54: *LPBOR Reset Hysteresis.*

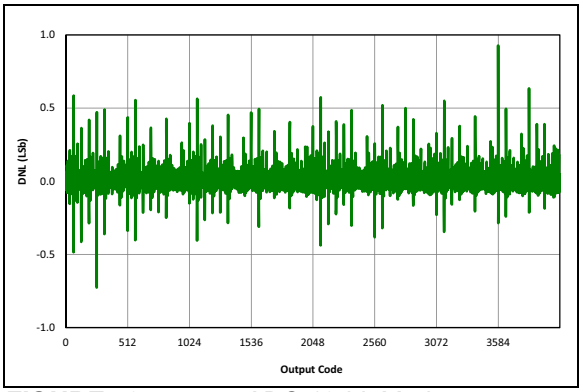

FIGURE 40-55: *ADC 12-bit Mode, Single-Ended DNL, V_{DD} = 3.0V, V_{REF} = 3.0V, T_{AD} = 1 μS, CP OFF, 25°C.*

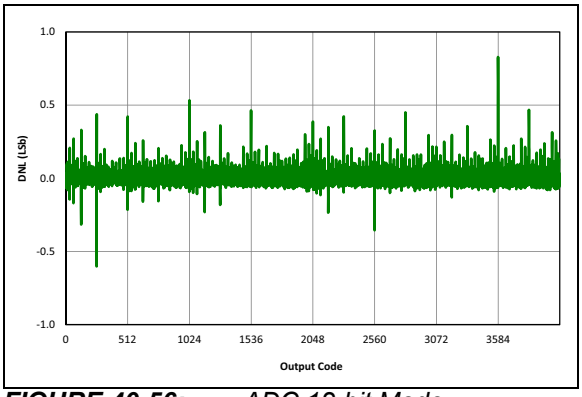

FIGURE 40-56: *ADC 12-bit Mode, Single-Ended DNL, V_{DD} = 3.0V, V_{REF} = 3.0V, T_{AD} = 1 μS, CP ON, 25°C.*

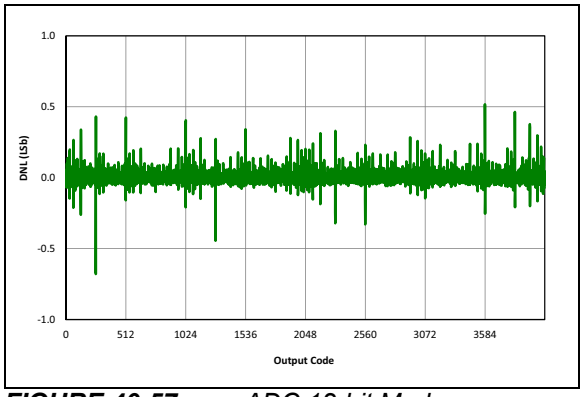

FIGURE 40-57: *ADC 12-bit Mode, Single-Ended DNL, V_{DD} = 2.3V, V_{REF} = 2.3V, T_{AD} = 1 μS, CP ON, 25°C.*

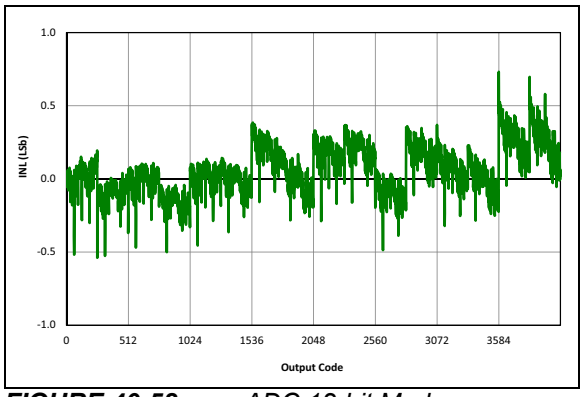

FIGURE 40-58: *ADC 12-bit Mode, Single-Ended INL, V_{DD} = 3.0V, V_{REF} = 3.0V, T_{AD} = 1 μS, CP OFF, 25°C.*

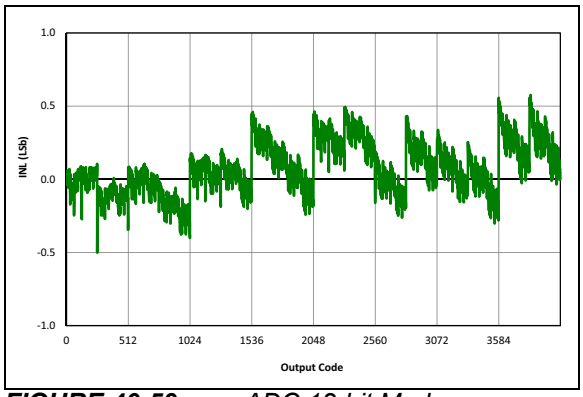

FIGURE 40-59: *ADC 12-bit Mode, Single-Ended INL, V_{DD} = 3.0V, V_{REF} = 3.0V, T_{AD} = 1 μS, CP ON, 25°C.*

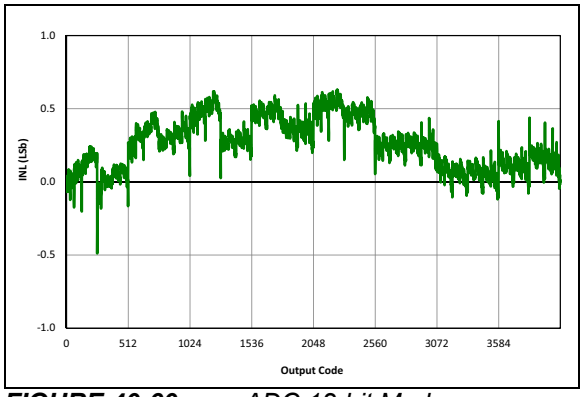

FIGURE 40-60: *ADC 12-bit Mode, Single-Ended INL, V_{DD} = 2.3V, V_{REF} = 2.3V, T_{AD} = 1 μS, CP ON, 25°C.*

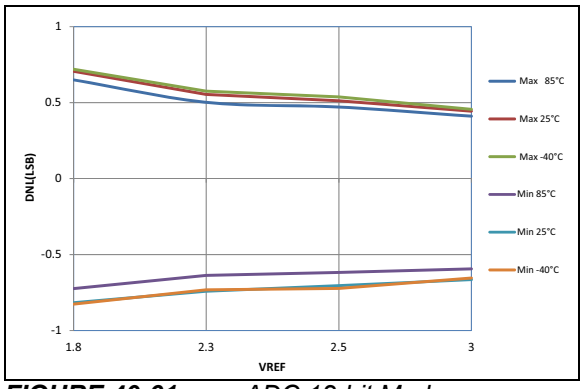

FIGURE 40-61: *ADC 12-bit Mode, Single-Ended Typical DNL, V_{DD} = 3.0V, T_{AD} = 1 μS, CP ON.*

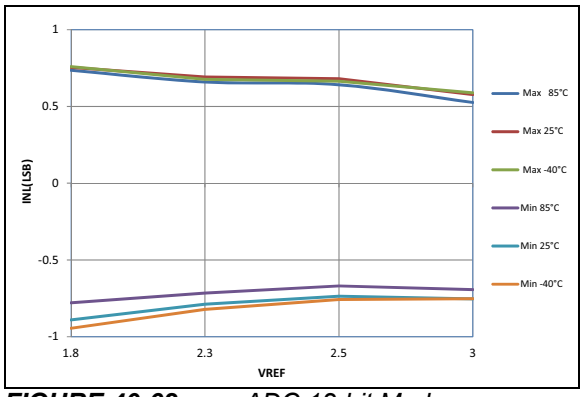

FIGURE 40-62: *ADC 12-bit Mode, Single-Ended Typical INL, V_{DD} = 3.0V, T_{AD} = 1 μS, CP ON.*

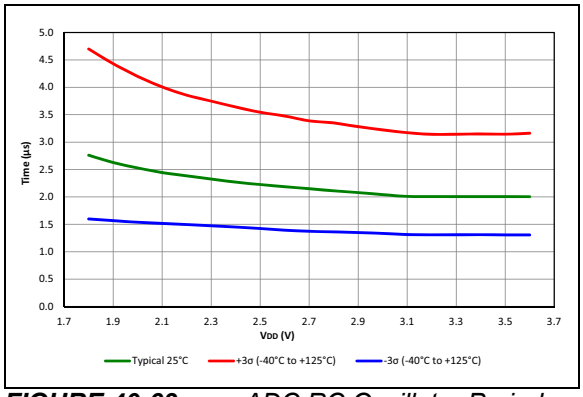

FIGURE 40-63: *ADC RC Oscillator Period, PIC16LF19155/56/75/76/85/86 Only.*

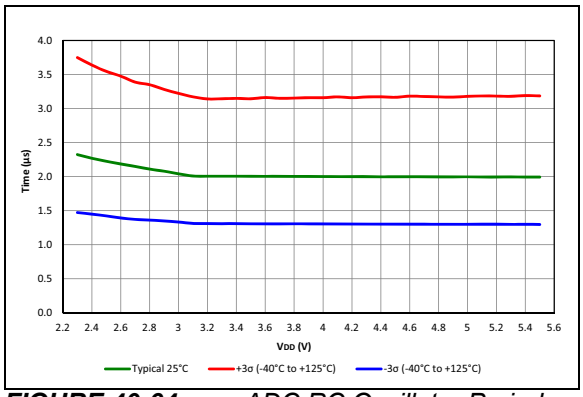

FIGURE 40-64: *ADC RC Oscillator Period, PIC16F19155/56/75/76/85/86 Only.*

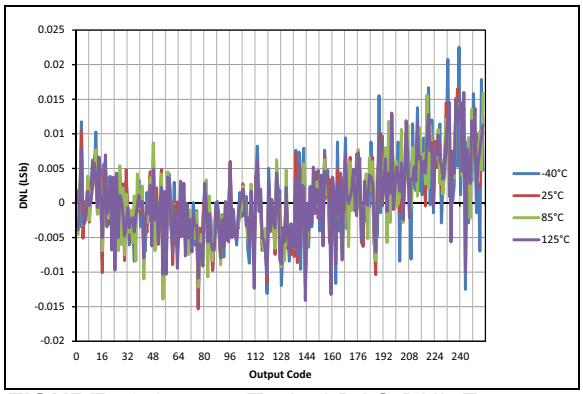

FIGURE 40-65: *Typical DAC DNL Error, V_{DD} = 3.0V, V_{REF} = External 3.0V.*

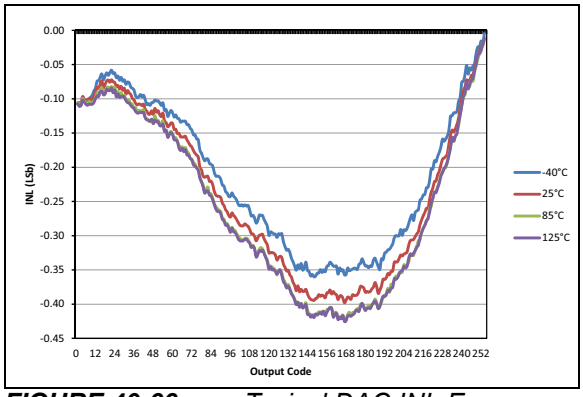

FIGURE 40-66: *Typical DAC INL Error, V_{DD} = 3.0V, V_{REF} = External 3.0V.*

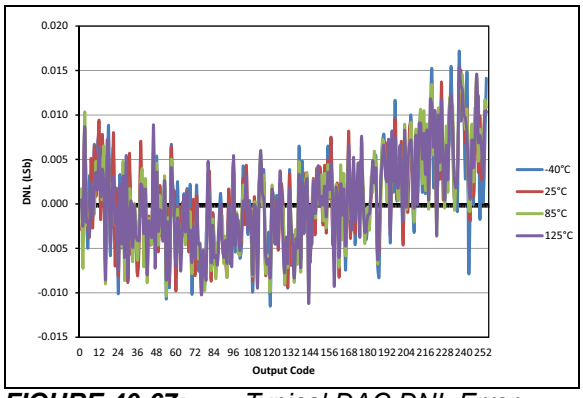

FIGURE 40-67: *Typical DAC DNL Error, V_{DD} = 5.0V, V_{REF} = External 5.0V PIC16F19155/56/75/76/85/86 Only.*

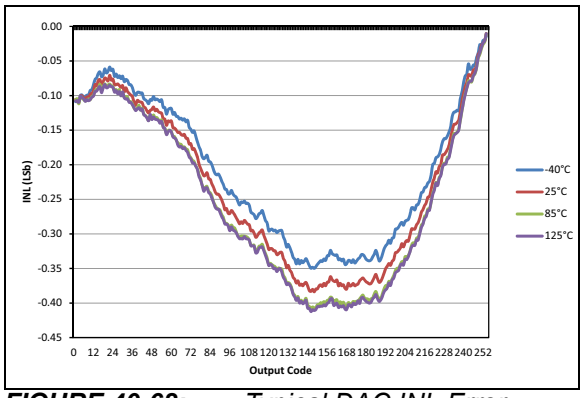

FIGURE 40-68: *Typical DAC INL Error, V_{DD} = 5.0V, V_{REF} = External 5.0V PIC16F19155/56/75/76/85/86 Only*

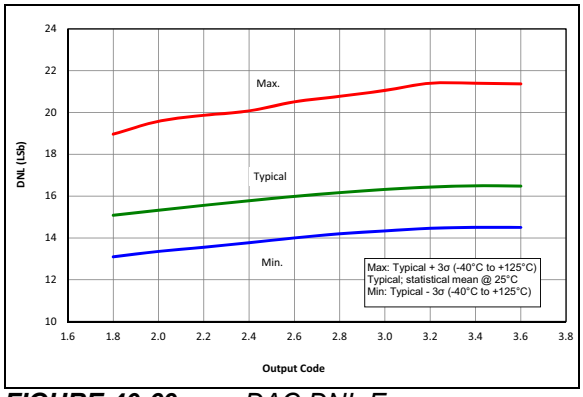

FIGURE 40-69: *DAC DNL Error, V_{DD} = 3.0V, PIC16LF19155/56/75/76/85/86 Only.*

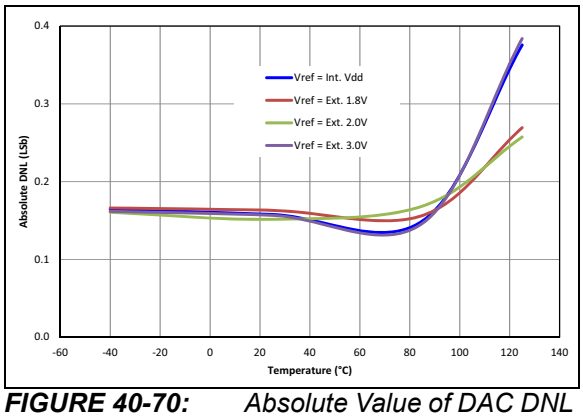

FIGURE 40-70: *Absolute Value of DAC DNL Error, V_{DD} = 3.0V, V_{REF} = V_{DD}.*

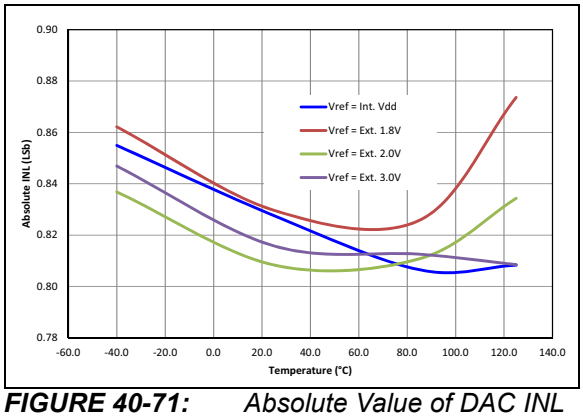

FIGURE 40-71: *Absolute Value of DAC INL Error, V_{DD} = 3.0V, V_{REF} = V_{DD}.*

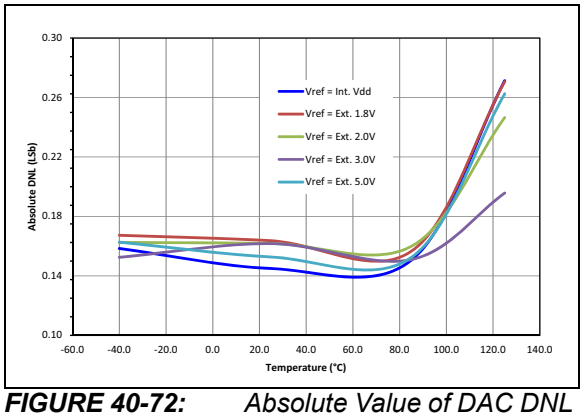

FIGURE 40-72: *Absolute Value of DAC DNL Error, V_{DD} = 5.0V, V_{REF} = V_{DD}, PIC16F19155/56/75/76/85/86 Only.*

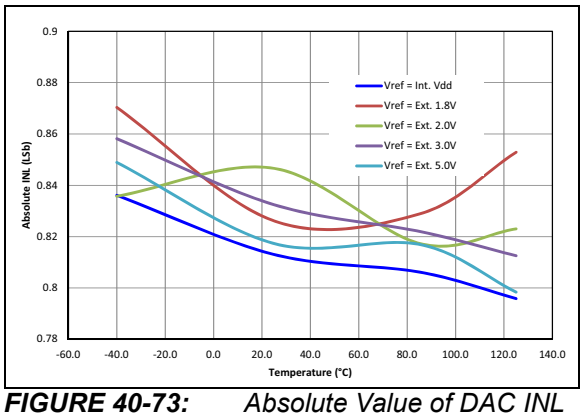

FIGURE 40-73: *Absolute Value of DAC INL Error, V_{DD} = 5.0V, V_{REF} = V_{DD}, PIC16F19155/56/75/76/85/86 Only.*

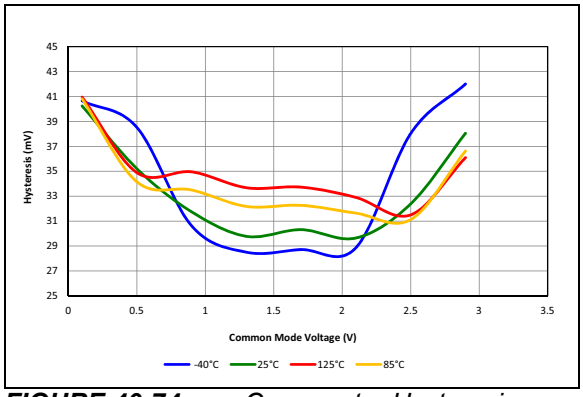

FIGURE 40-74: *Comparator Hysteresis, NP Mode (CxSP = 1), VDD = 3.0V, Typical Measured Values.*

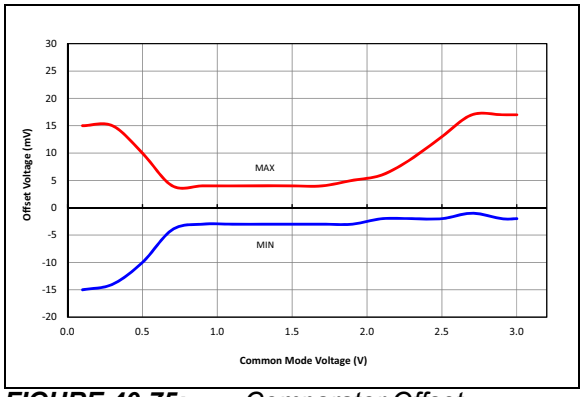

FIGURE 40-75: *Comparator Offset, NP Mode (CxSP = 1), VDD = 3.0V, Typical Measured Values at 25°C.*

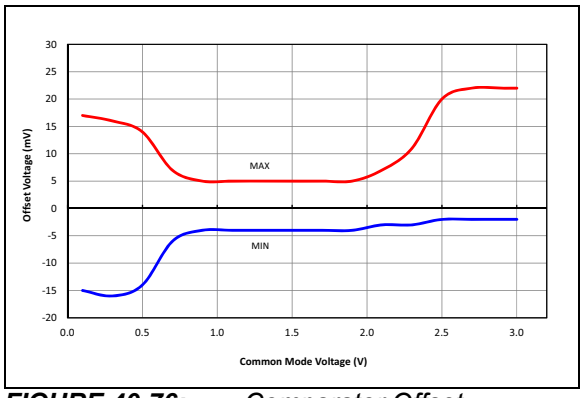

FIGURE 40-76: *Comparator Offset, NP Mode (CxSP = 1), VDD = 3.0V, Typical Measured Values from -40°C to 125°C.*

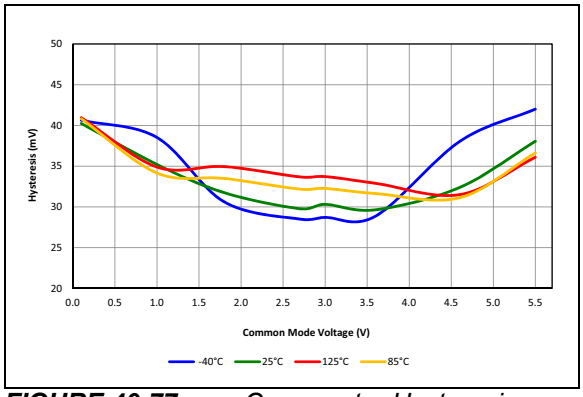

FIGURE 40-77: *Comparator Hysteresis, NP Mode (CxSP = 1), VDD = 5.5V, Typical Measured Values, PIC16F19155/56/75/76/85/86 Only.*

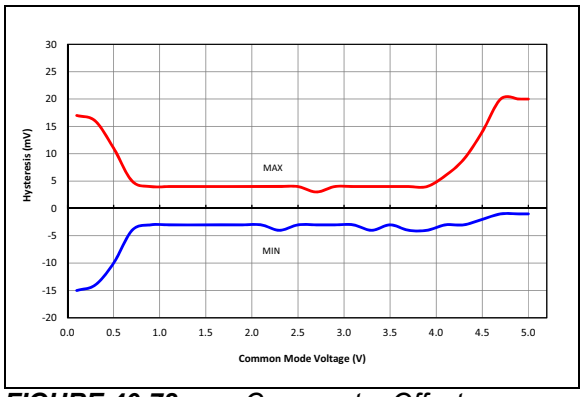

FIGURE 40-78: *Comparator Offset, NP Mode (CxSP = 1), VDD = 5.0V, Typical Measured Values at 25°C, PIC16F19155/56/75/76/85/86 Only*

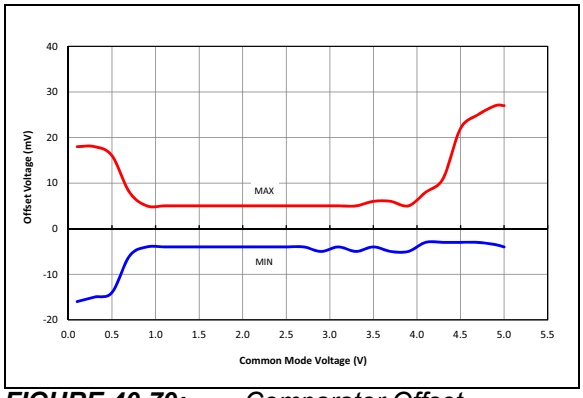

FIGURE 40-79: *Comparator Offset, NP Mode (CxSP = 1), VDD = 5.5V, Typical Measured Values from -40°C to 125°C, PIC16F19155/56/75/76/85/86 Only.*

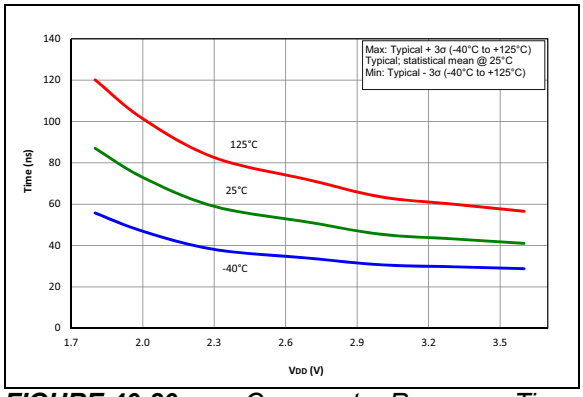

FIGURE 40-80: *Comparator Response Time Over Voltage, NP Mode (CxSP = 1), Typical Measured Values, PIC16LF19155/56/75/76/85/86 Only.*

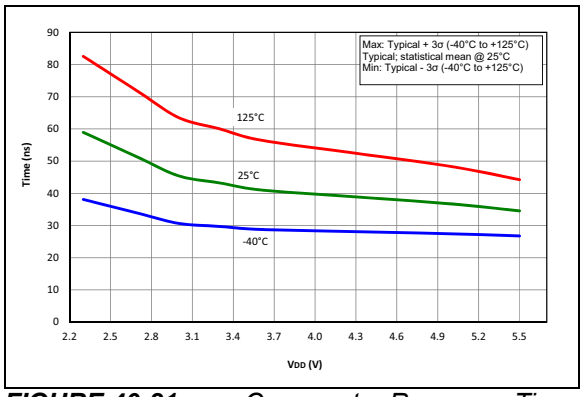

FIGURE 40-81: *Comparator Response Time Over Voltage, NP Mode (CxSP = 1), Typical Measured Values, PIC16F19155/56/75/76/85/86 Only*

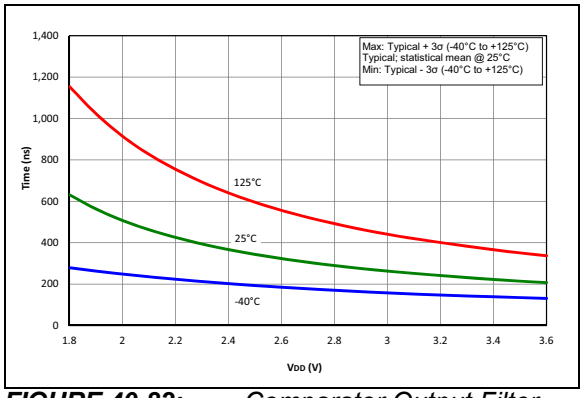

FIGURE 40-82: *Comparator Output Filter Delay Time Over Temp., NP Mode (CxSP = 1), Typical Measured Values, PIC16LF19155/56/75/76/85/86 Only.*

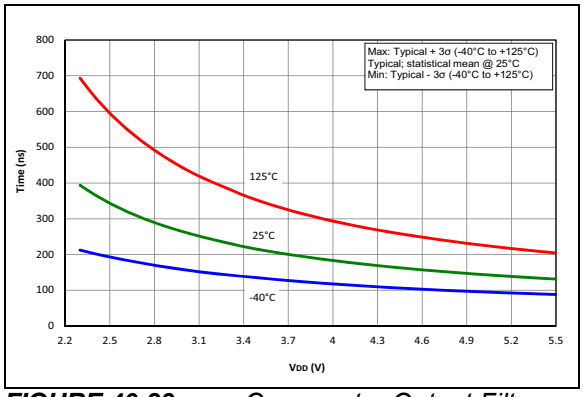

FIGURE 40-83: *Comparator Output Filter Delay Time Over Temp., NP Mode (CxSP = 1), Typical Measured Values, PIC16F19155/56/75/76/85/86 Only.*

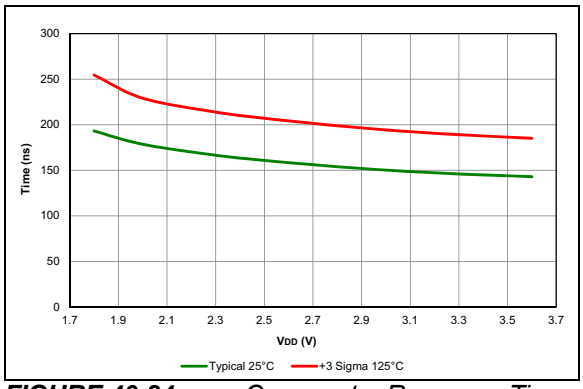

FIGURE 40-84: *Comparator Response Time Falling Edge, PIC16LF19155/56/75/76/85/86 Only.*

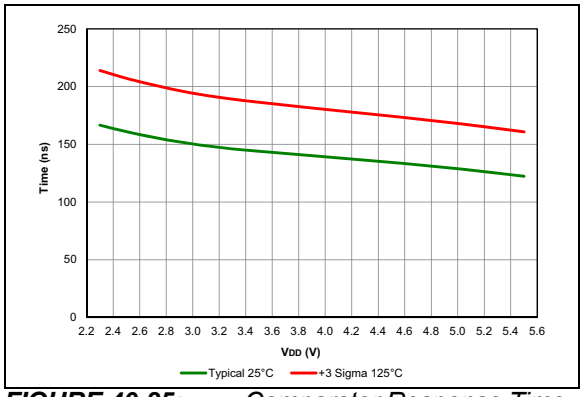

FIGURE 40-85: *Comparator Response Time Falling Edge, PIC16F19155/56/75/76/85/86 Only.*

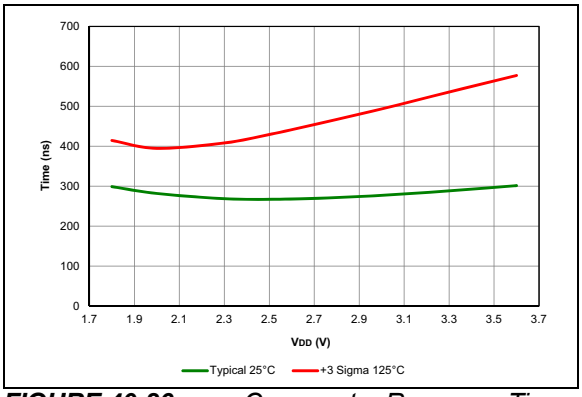

FIGURE 40-86: *Comparator Response Time Rising Edge, PIC16LF19155/56/75/76/85/86 Only.*

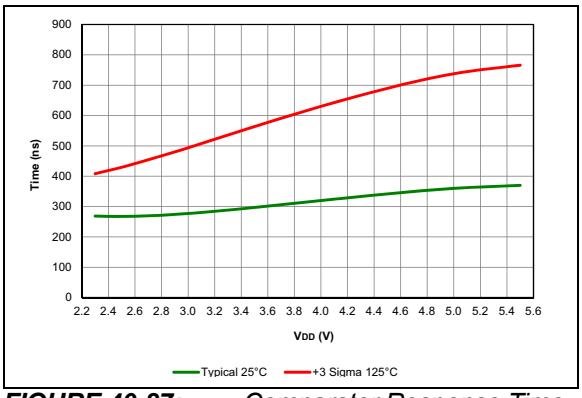

FIGURE 40-87: *Comparator Response Time Rising Edge, PIC16F19155/56/75/76/85/86 Only.*

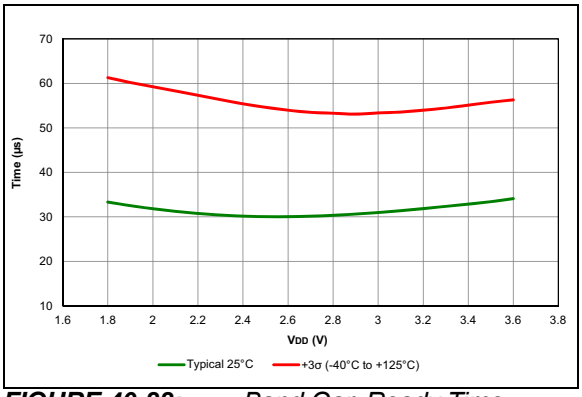

FIGURE 40-88: *Band Gap Ready Time, PIC16LF19155/56/75/76/85/86 Only.*

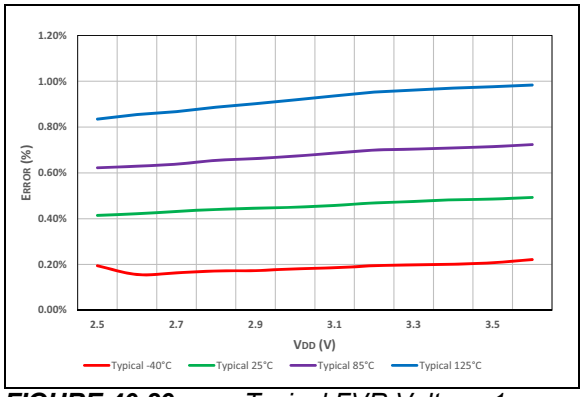

FIGURE 40-89: *Typical FVR Voltage 1x Error, PIC16LF19155/56/75/76/85/86 Only.*

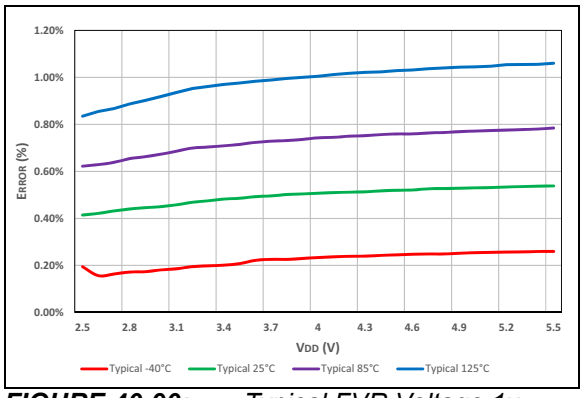

FIGURE 40-90: *Typical FVR Voltage 1x Error, PIC16F19155/56/75/76/85/86 Only.*

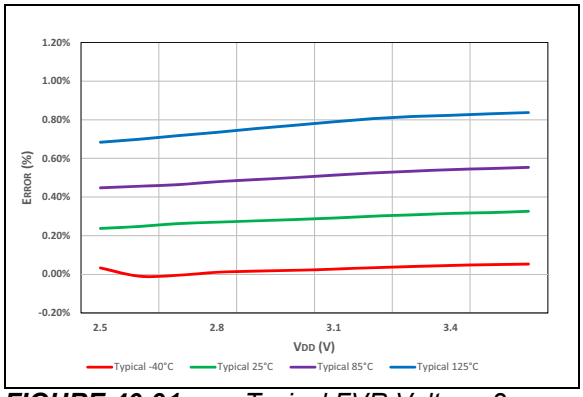

FIGURE 40-91: *Typical FVR Voltage 2x Error, PIC16LF19155/56/75/76/85/86 Only.*

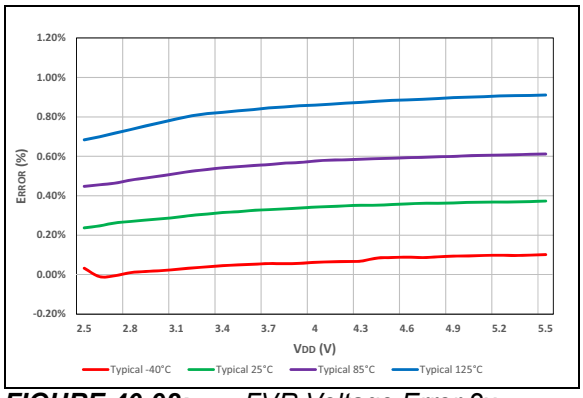

FIGURE 40-92: *FVR Voltage Error 2x, PIC16F19155/56/75/76/85/86 Only.*

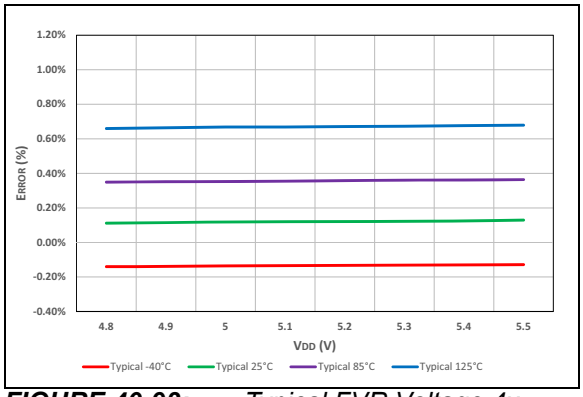

FIGURE 40-93: *Typical FVR Voltage 4x Error, PIC16F19155/56/75/76/85/86 Only.*

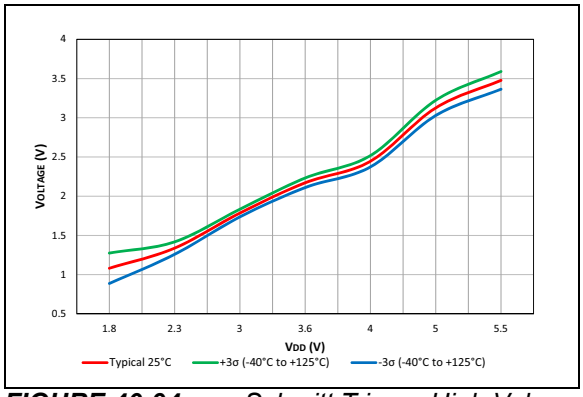

FIGURE 40-94: *Schmitt Trigger High Values.*

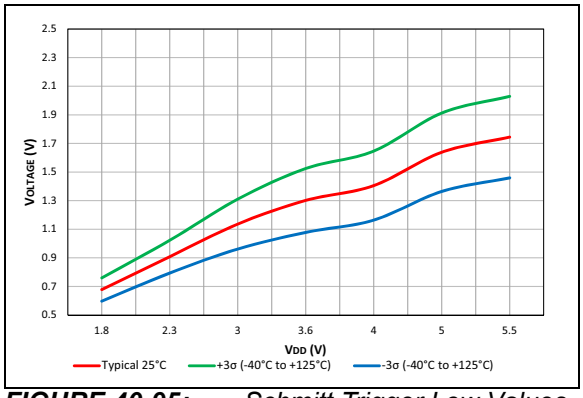

FIGURE 40-95: *Schmitt Trigger Low Values.*

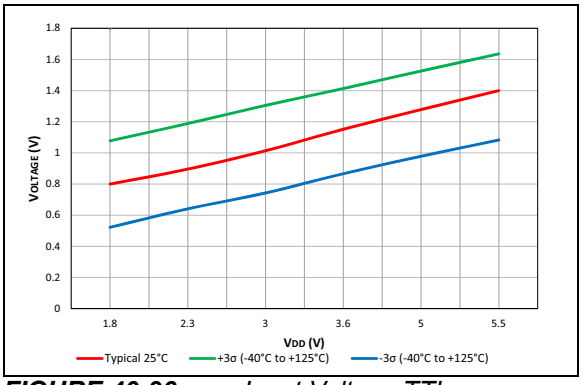

FIGURE 40-96: *Input Voltage TTL.*

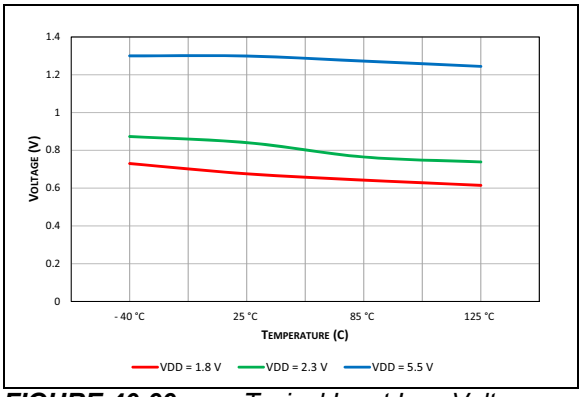

FIGURE 40-99: *Typical Input Low Voltage with SMBus Level.*

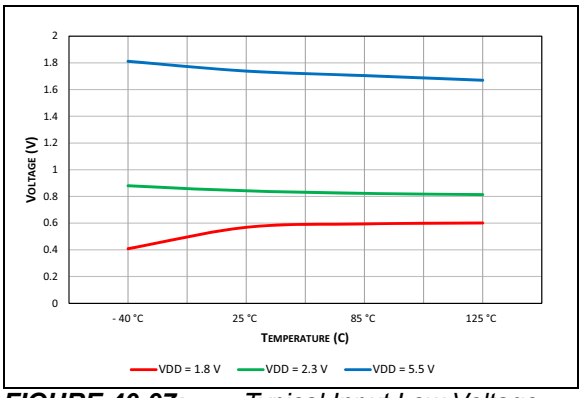

FIGURE 40-97: *Typical Input Low Voltage with I²C Level.*

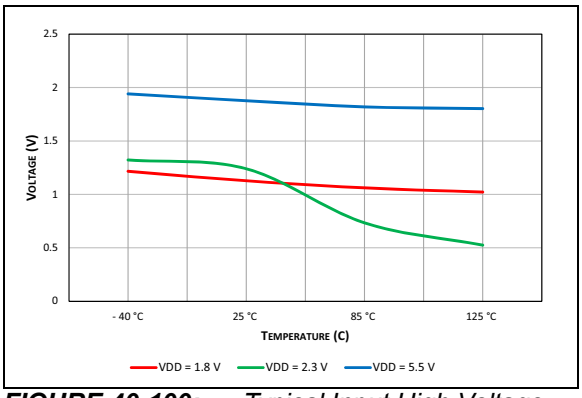

FIGURE 40-100: *Typical Input High Voltage with SMBus Level.*

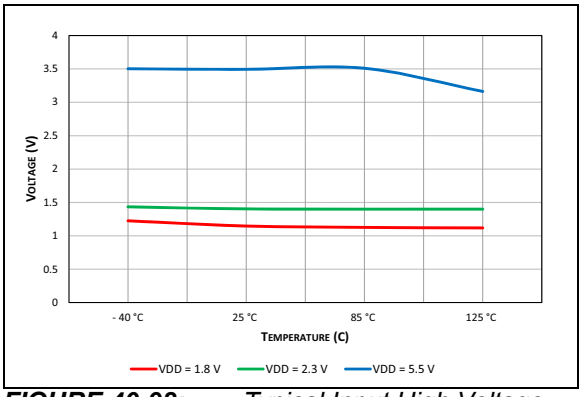

FIGURE 40-98: *Typical Input High Voltage with I²C Level.*

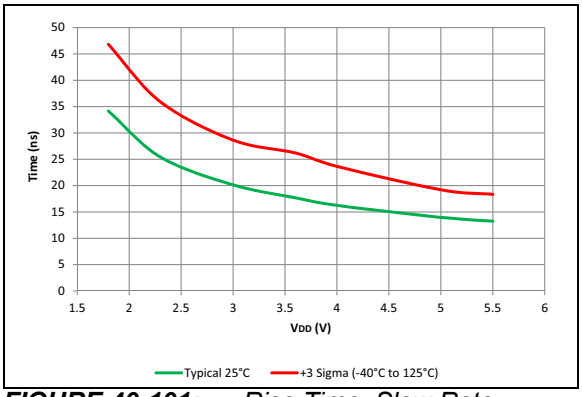

FIGURE 40-101: *Rise Time, Slew Rate Control Enabled.*

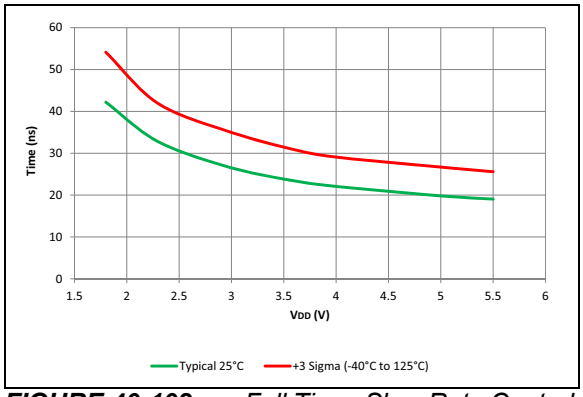

FIGURE 40-102: *Fall Time, Slew Rate Control Enabled.*

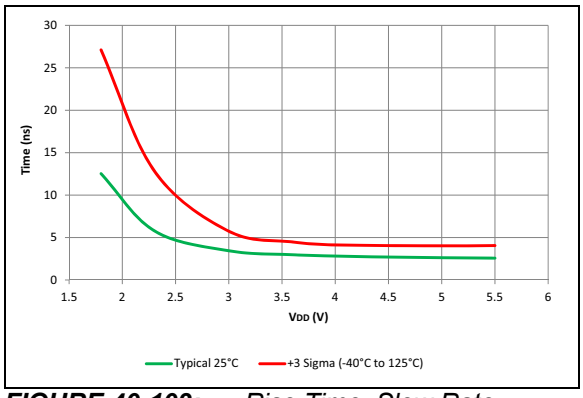

FIGURE 40-103: *Rise Time, Slew Rate Control Disabled.*

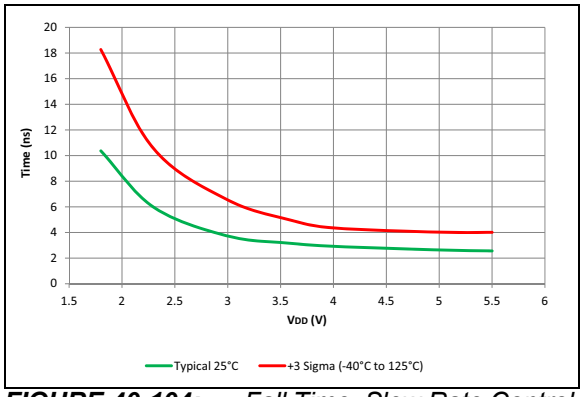

FIGURE 40-104: *Fall Time, Slew Rate Control Disabled.*

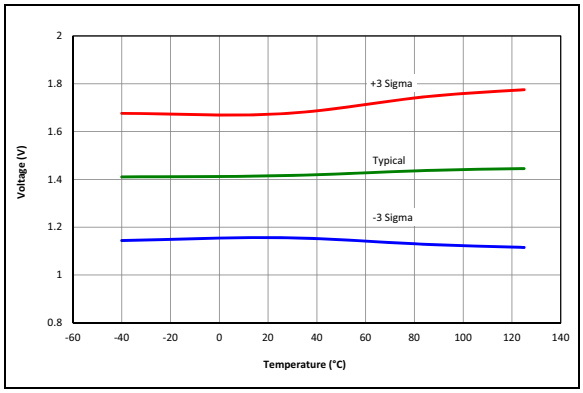

FIGURE 40-105: *POR Rearm Voltage.*

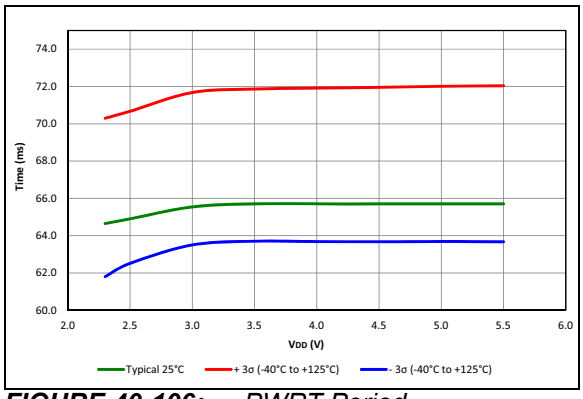

FIGURE 40-106: *PWRT Period, PIC16F19155/56/75/76/85/86 Only.*

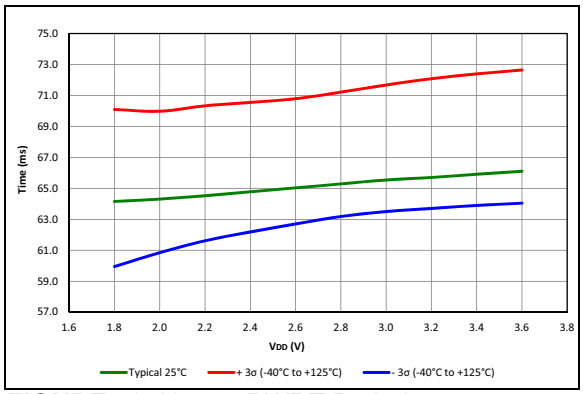

FIGURE 40-107: *PWRT Period, PIC16LF19155/56/75/76/85/86 Only.*

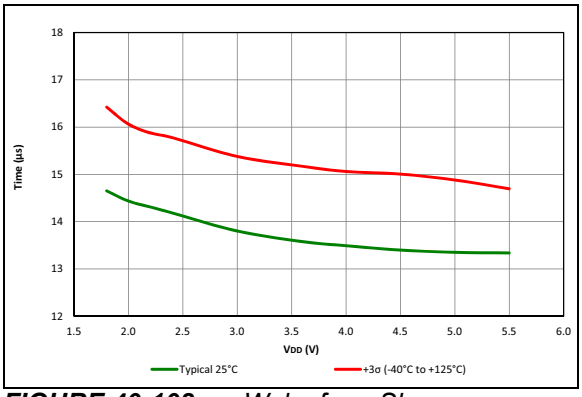

FIGURE 40-108: *Wake from Sleep, VREGPM = 0, HFINTOSC = 4 MHz, PIC16F19155/56/75/76/85/86 Only.*

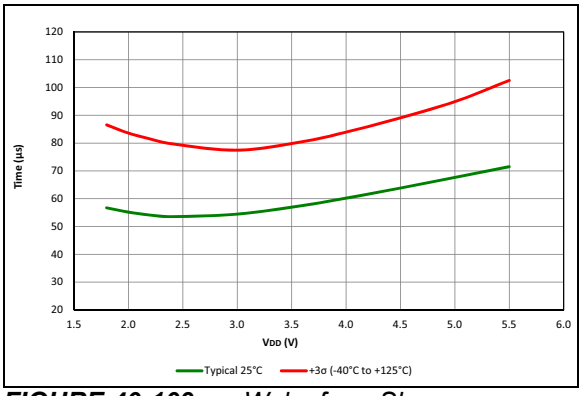

FIGURE 40-109: *Wake from Sleep, VREGPM = 1, HFINTOSC = 4 MHz, PIC16F19155/56/75/76/85/86 Only.*

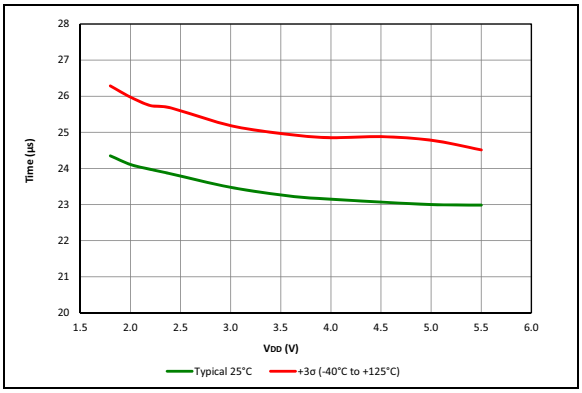

FIGURE 40-110: *Wake from Sleep, VREGPM = 0, HFINTOSC = 16 MHz, PIC16F19155/56/75/76/85/86 Only.*

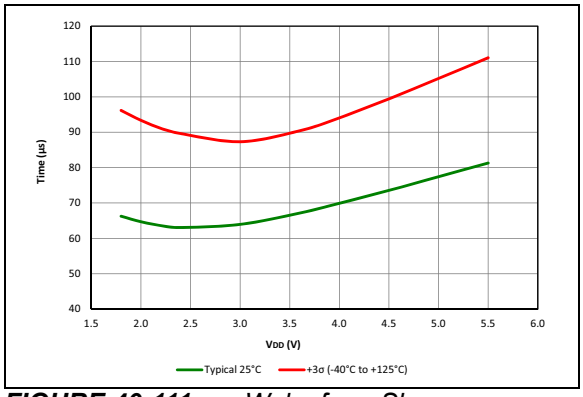

FIGURE 40-111: *Wake from Sleep, VREGPM = 1, HFINTOSC = 16 MHz, PIC16F19155/56/75/76/85/86 Only.*

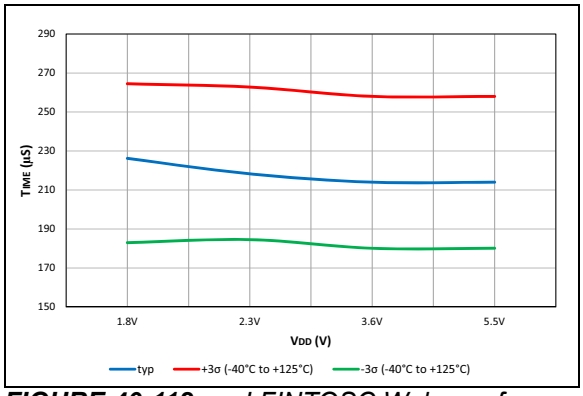

FIGURE 40-112: *LFINTOSC Wake-up from Sleep Start-up Time*

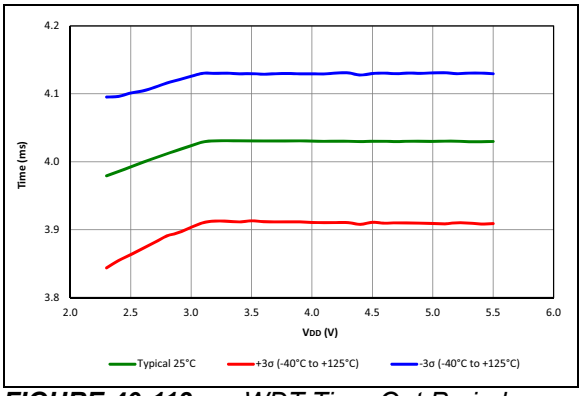

FIGURE 40-113: *WDT Time-Out Period, PIC16F19155/56/75/76/85/86 Only.*

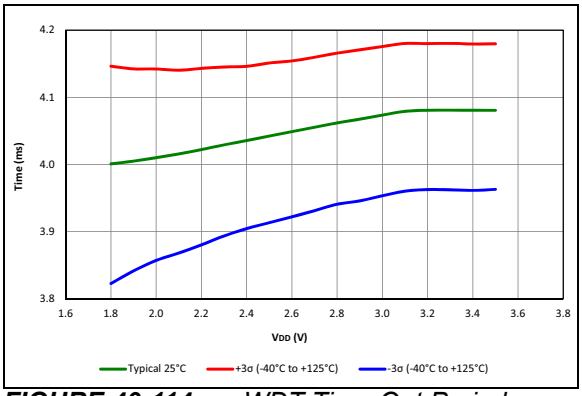

FIGURE 40-114: *WDT Time-Out Period, PIC16LF19155/56/75/76/85/86 Only.*

41.0 DEVELOPMENT SUPPORT

The PIC® microcontrollers (MCU) and dsPIC® digital signal controllers (DSC) are supported with a full range of software and hardware development tools:

- Integrated Development Environment
  - MPLAB® X IDE Software
  - MPLAB® XPRESS IDE Software
- Compilers/Assemblers/Linkers
  - MPLAB XC Compiler
  - MPASM™ Assembler
  - MPLINK™ Object Linker/ MPLIB™ Object Librarian
  - MPLAB Assembler/Linker/Librarian for Various Device Families
- Simulators
  - MPLAB X SIM Software Simulator
- Emulators
  - MPLAB REAL ICE™ In-Circuit Emulator
- In-Circuit Debuggers/Programmers
  - MPLAB ICD 3
  - PICkit™ 3
- Device Programmers
  - MPLAB PM3 Device Programmer
- Low-Cost Demonstration/Development Boards, Evaluation Kits and Starter Kits
- Third-party development tools

41.1 MPLAB X Integrated Development Environment Software

The MPLAB X IDE is a single, unified graphical user interface for Microchip and third-party software, and hardware development tool that runs on Windows®, Linux and Mac OS® X. Based on the NetBeans IDE, MPLAB X IDE is an entirely new IDE with a host of free software components and plug-ins for high-performance application development and debugging. Moving between tools and upgrading from software simulators to hardware debugging and programming tools is simple with the seamless user interface.

With complete project management, visual call graphs, a configurable watch window and a feature-rich editor that includes code completion and context menus, MPLAB X IDE is flexible and friendly enough for new users. With the ability to support multiple tools on multiple projects with simultaneous debugging, MPLAB X IDE is also suitable for the needs of experienced users.

Feature-Rich Editor:

- Color syntax highlighting
- Smart code completion makes suggestions and provides hints as you type
- Automatic code formatting based on user-defined rules
- Live parsing

User-Friendly, Customizable Interface:

- Fully customizable interface: toolbars, toolbar buttons, windows, window placement, etc.
- Call graph window

Project-Based Workspaces:

- Multiple projects
- Multiple tools
- Multiple configurations
- Simultaneous debugging sessions

File History and Bug Tracking:

- Local file history feature
- Built-in support for Bugzilla issue tracker

41.2 MPLAB XC Compilers

The MPLAB XC Compilers are complete ANSI C compilers for all of Microchip's 8, 16, and 32-bit MCU and DSC devices. These compilers provide powerful integration capabilities, superior code optimization and ease of use. MPLAB XC Compilers run on Windows, Linux or MAC OS X.

For easy source level debugging, the compilers provide debug information that is optimized to the MPLAB X IDE.

The free MPLAB XC Compiler editions support all devices and commands, with no time or memory restrictions, and offer sufficient code optimization for most applications.

MPLAB XC Compilers include an assembler, linker and utilities. The assembler generates relocatable object files that can then be archived or linked with other relocatable object files and archives to create an executable file. MPLAB XC Compiler uses the assembler to produce its object file. Notable features of the assembler include:

- Support for the entire device instruction set
- Support for fixed-point and floating-point data
- Command-line interface
- Rich directive set
- Flexible macro language
- MPLAB X IDE compatibility

41.3 MPASM Assembler

The MPASM Assembler is a full-featured, universal macro assembler for PIC10/12/16/18 MCUs.

The MPASM Assembler generates relocatable object files for the MPLINK Object Linker, Intel® standard HEX files, MAP files to detail memory usage and symbol reference, absolute LST files that contain source lines and generated machine code, and COFF files for debugging.

The MPASM Assembler features include:

- Integration into MPLAB X IDE projects
- User-defined macros to streamline assembly code
- Conditional assembly for multipurpose source files
- Directives that allow complete control over the assembly process

41.4 MPLINK Object Linker/ MPLIB Object Librarian

The MPLINK Object Linker combines relocatable objects created by the MPASM Assembler. It can link relocatable objects from precompiled libraries, using directives from a linker script.

The MPLIB Object Librarian manages the creation and modification of library files of precompiled code. When a routine from a library is called from a source file, only the modules that contain that routine will be linked in with the application. This allows large libraries to be used efficiently in many different applications.

The object linker/library features include:

- Efficient linking of single libraries instead of many smaller files
- Enhanced code maintainability by grouping related modules together
- Flexible creation of libraries with easy module listing, replacement, deletion and extraction

41.5 MPLAB Assembler, Linker and Librarian for Various Device Families

MPLAB Assembler produces relocatable machine code from symbolic assembly language for PIC24, PIC32 and dsPIC DSC devices. MPLAB XC Compiler uses the assembler to produce its object file. The assembler generates relocatable object files that can then be archived or linked with other relocatable object files and archives to create an executable file. Notable features of the assembler include:

- Support for the entire device instruction set
- Support for fixed-point and floating-point data
- Command-line interface
- Rich directive set
- Flexible macro language
- MPLAB X IDE compatibility

41.6 MPLAB X SIM Software Simulator

The MPLAB X SIM Software Simulator allows code development in a PC-hosted environment by simulating the PIC MCUs and dsPIC DSCs on an instruction level. On any given instruction, the data areas can be examined or modified and stimuli can be applied from a comprehensive stimulus controller. Registers can be logged to files for further run-time analysis. The trace buffer and logic analyzer display extend the power of the simulator to record and track program execution, actions on I/O, most peripherals and internal registers.

The MPLAB X SIM Software Simulator fully supports symbolic debugging using the MPLAB XC Compilers, and the MPASM and MPLAB Assemblers. The software simulator offers the flexibility to develop and debug code outside of the hardware laboratory environment, making it an excellent, economical software development tool.

41.7 MPLAB REAL ICE In-Circuit Emulator System

The MPLAB REAL ICE In-Circuit Emulator System is Microchip's next generation high-speed emulator for Microchip Flash DSC and MCU devices. It debugs and programs all 8, 16 and 32-bit MCU, and DSC devices with the easy-to-use, powerful graphical user interface of the MPLAB X IDE.

The emulator is connected to the design engineer's PC using a high-speed USB 2.0 interface and is connected to the target with either a connector compatible with in-circuit debugger systems (RJ-11) or with the new high-speed, noise tolerant, Low-Voltage Differential Signal (LVDS) interconnection (CAT5).

The emulator is field upgradeable through future firmware downloads in MPLAB X IDE. MPLAB REAL ICE offers significant advantages over competitive emulators including full-speed emulation, run-time variable watches, trace analysis, complex breakpoints, logic probes, a ruggedized probe interface and long (up to three meters) interconnection cables.

41.8 MPLAB ICD 3 In-Circuit Debugger System

The MPLAB ICD 3 In-Circuit Debugger System is Microchip's most cost-effective, high-speed hardware debugger/programmer for Microchip Flash DSC and MCU devices. It debugs and programs PIC Flash microcontrollers and dsPIC DSCs with the powerful, yet easy-to-use graphical user interface of the MPLAB IDE.

The MPLAB ICD 3 In-Circuit Debugger probe is connected to the design engineer's PC using a high-speed USB 2.0 interface and is connected to the target with a connector compatible with the MPLAB ICD 2 or MPLAB REAL ICE systems (RJ-11). MPLAB ICD 3 supports all MPLAB ICD 2 headers.

41.9 PICkit 3 In-Circuit Debugger/ Programmer

The MPLAB PICkit 3 allows debugging and programming of PIC and dsPIC Flash microcontrollers at a most affordable price point using the powerful graphical user interface of the MPLAB IDE. The MPLAB PICkit 3 is connected to the design engineer's PC using a full-speed USB interface and can be connected to the target via a Microchip debug (RJ-11) connector (compatible with MPLAB ICD 3 and MPLAB REAL ICE). The connector uses two device I/O pins and the Reset line to implement in-circuit debugging and In-Circuit Serial Programming™ (ICSP™).

41.10 MPLAB PM3 Device Programmer

The MPLAB PM3 Device Programmer is a universal, CE compliant device programmer with programmable voltage verification at V_{DDMIN} and V_{DDMAX} for maximum reliability. It features a large LCD display (128 x 64) for menus and error messages, and a modular, detachable socket assembly to support various package types. The ICSP cable assembly is included as a standard item. In Stand-Alone mode, the MPLAB PM3 Device Programmer can read, verify and program PIC devices without a PC connection. It can also set code protection in this mode. The MPLAB PM3 connects to the host PC via an RS-232 or USB cable. The MPLAB PM3 has high-speed communications and optimized algorithms for quick programming of large memory devices, and incorporates an MMC card for file storage and data applications.

© 2017-2019 Microchip Technology Inc.

41.11 Demonstration/Development Boards, Evaluation Kits, and Starter Kits

A wide variety of demonstration, development and evaluation boards for various PIC MCUs and dsPIC DSCs allows quick application development on fully functional systems. Most boards include prototyping areas for adding custom circuitry and provide application firmware and source code for examination and modification.

The boards support a variety of features, including LEDs, temperature sensors, switches, speakers, RS-232 interfaces, LCD displays, potentiometers and additional EEPROM memory.

The demonstration and development boards can be used in teaching environments, for prototyping custom circuits and for learning about various microcontroller applications.

In addition to the PICDEM™ and dsPICDEM™ demonstration/development board series of circuits, Microchip has a line of evaluation kits and demonstration software for analog filter design, KEELOQ® security ICs, CAN, IrDA®, PowerSmart battery management, SEEVAL® evaluation system, Sigma-Delta ADC, flow rate sensing, plus many more.

Also available are starter kits that contain everything needed to experience the specified device. This usually includes a single application and debug capability, all on one board.

Check the Microchip web page (www.microchip.com) for the complete list of demonstration, development and evaluation kits.

41.12 Third-Party Development Tools

Microchip also offers a great collection of tools from third-party vendors. These tools are carefully selected to offer good value and unique functionality.

- Device Programmers and Gang Programmers from companies, such as SoftLog and CCS
- Software Tools from companies, such as Gimpel and Trace Systems
- Protocol Analyzers from companies, such as Saleae and Total Phase
- Demonstration Boards from companies, such as MikroElektronika, Digilent® and Olimex
- Embedded Ethernet Solutions from companies, such as EZ Web Lynx, WIZnet and IPLogika®

42.0 PACKAGING INFORMATION

42.1 Package Marking Information

28-Lead SSOP (5.30 mm)

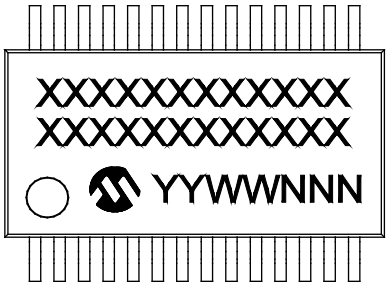

Example

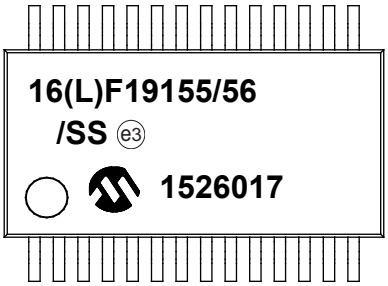

28-Lead SPDIP (.300”)

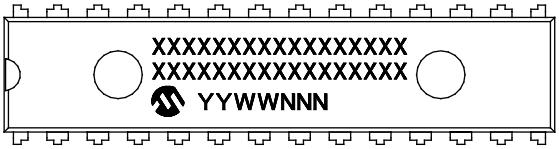

Example

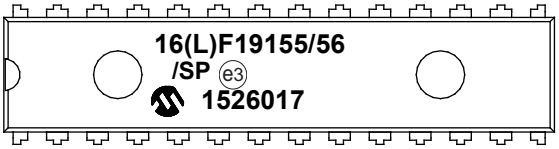

28-Lead SOIC (7.50 mm)

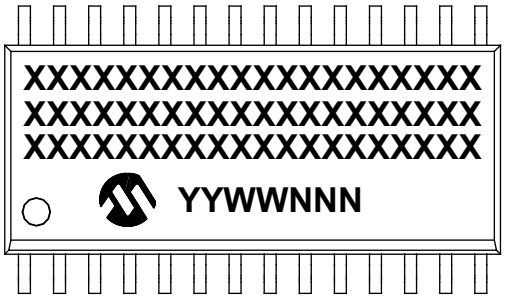

Example

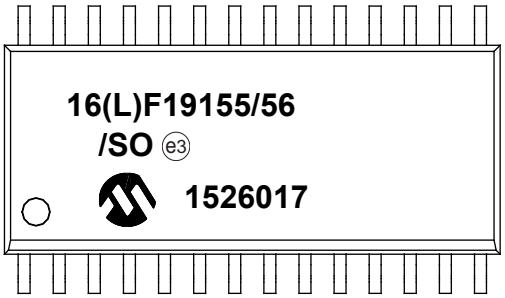

Legend:	XX...X	Customer-specific information
	Y	Year code (last digit of calendar year)
	YY	Year code (last 2 digits of calendar year)
	WW	Week code (week of January 1 is week ‘01’)
	NNN	Alphanumeric traceability code
	e3	Pb-free JEDEC® designator for Matte Tin (Sn)
	*	This package is Pb-free. The Pb-free JEDEC designator (e3) can be found on the outer packaging for this package.
Note:	In the event the full Microchip part number cannot be marked on one line, it will be carried over to the next line, thus limiting the number of available characters for customer-specific information.	

42.1 Package Marking Information (Continued)

28-Lead UQFN (4x4x0.5 mm)

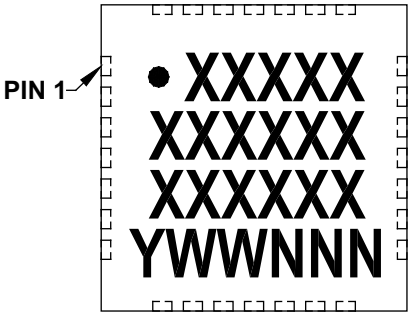

Example

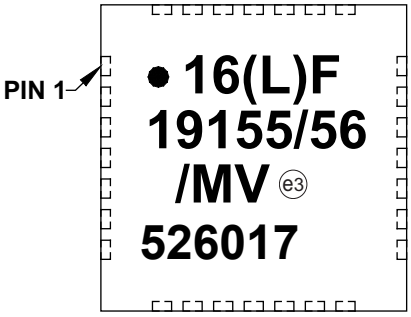

40-Lead PDIP (600 mil)

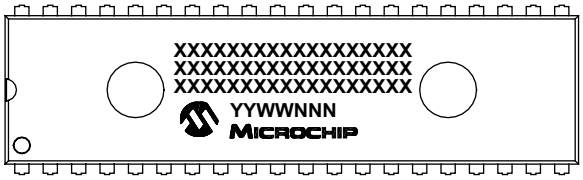

Example

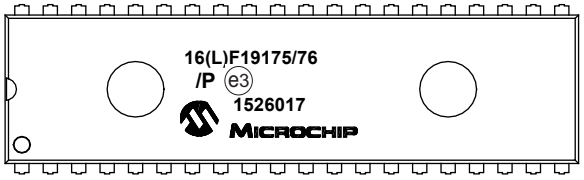

Legend:	XX...X	Customer-specific information
	Y	Year code (last digit of calendar year)
	YY	Year code (last 2 digits of calendar year)
	WW	Week code (week of January 1 is week ‘01’)
	NNN	Alphanumeric traceability code
		Pb-free JEDEC® designator for Matte Tin (Sn)
	*	This package is Pb-free. The Pb-free JEDEC designator (e3) can be found on the outer packaging for this package.

Note: In the event the full Microchip part number cannot be marked on one line, it will be carried over to the next line, thus limiting the number of available characters for customer-specific information.

42.1 Package Marking Information (Continued)

40-Lead UQFN (5x5x0.5 mm)

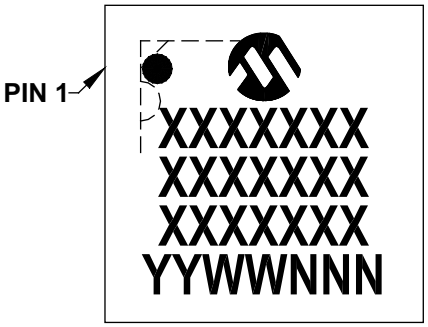

Example

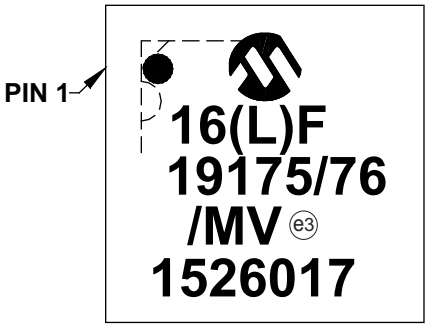

44-Lead TQFP (10x10x1 mm)

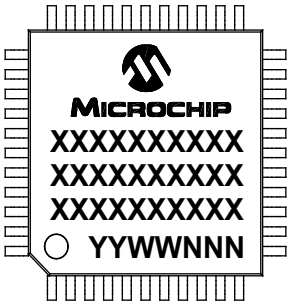

Example

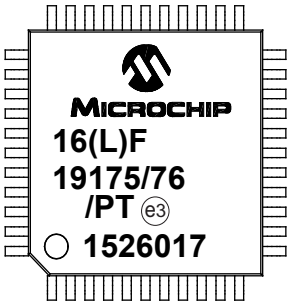

Legend:	XX...X	Customer-specific information
	Y	Year code (last digit of calendar year)
	YY	Year code (last 2 digits of calendar year)
	WW	Week code (week of January 1 is week ‘01’)
	NNN	Alphanumeric traceability code
		Pb-free JEDEC® designator for Matte Tin (Sn)
	*	This package is Pb-free. The Pb-free JEDEC designator (e3) can be found on the outer packaging for this package.

Note: In the event the full Microchip part number cannot be marked on one line, it will be carried over to the next line, thus limiting the number of available characters for customer-specific information.

42.1 Package Marking Information (Continued)

48-Lead TQFP (7x7x1 mm)

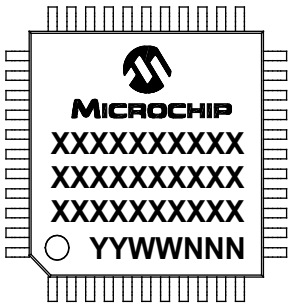

Example

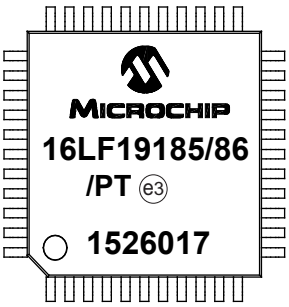

Legend:	XX...X	Customer-specific information
	Y	Year code (last digit of calendar year)
	YY	Year code (last 2 digits of calendar year)
	WW	Week code (week of January 1 is week ‘01’)
	NNN	Alphanumeric traceability code
		Pb-free JEDEC® designator for Matte Tin (Sn)
	*	This package is Pb-free. The Pb-free JEDEC designator (e3) can be found on the outer packaging for this package.

Note: In the event the full Microchip part number cannot be marked on one line, it will be carried over to the next line, thus limiting the number of available characters for customer-specific information.

42.1 Package Marking Information (Continued)

48-Lead UQFN (6x6x0.5 mm)

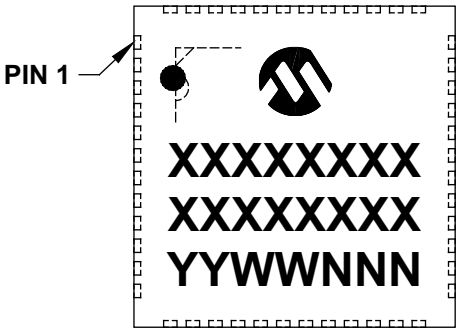

Example

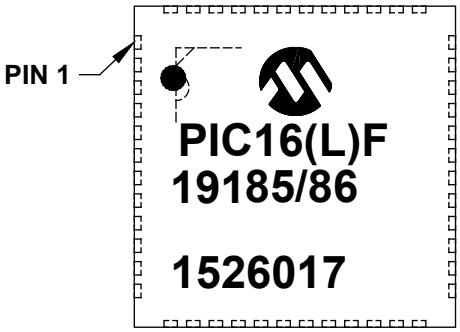

Legend:	XX...X	Customer-specific information
	Y	Year code (last digit of calendar year)
	YY	Year code (last 2 digits of calendar year)
	WW	Week code (week of January 1 is week ‘01’)
	NNN	Alphanumeric traceability code
		Pb-free JEDEC® designator for Matte Tin (Sn)
	*	This package is Pb-free. The Pb-free JEDEC designator (e3) can be found on the outer packaging for this package.

Note: In the event the full Microchip part number cannot be marked on one line, it will be carried over to the next line, thus limiting the number of available characters for customer-specific information.

The following sections give the technical details of the packages.

28-Lead Plastic Shrink Small Outline (SS) – 5.30 mm Body [SSOP]

Note: For the most current package drawings, please see the Microchip Packaging Specification located at http://www.microchip.com/packaging

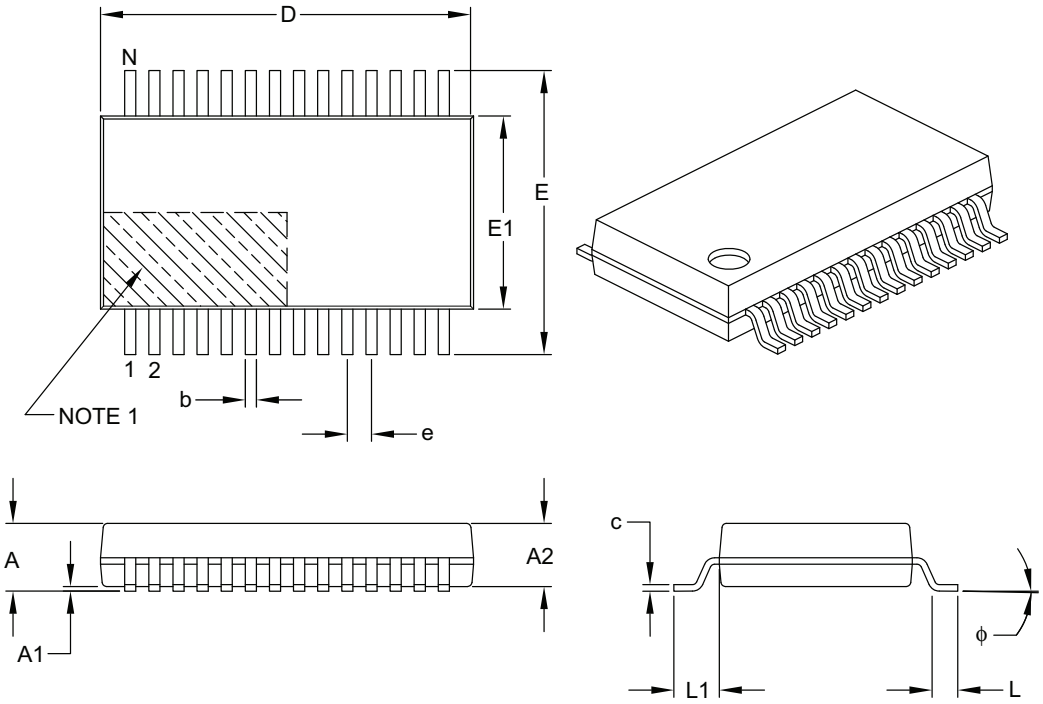

Units		MILLIMETERS		
Dimension Limits		MIN	NOM	MAX
Number of Pins	N	28		
Pitch	e	0.65 BSC		
Overall Height	A	–	–	2.00
Molded Package Thickness	A2	1.65	1.75	1.85
Standoff	A1	0.05	–	–
Overall Width	E	7.40	7.80	8.20
Molded Package Width	E1	5.00	5.30	5.60
Overall Length	D	9.90	10.20	10.50
Foot Length	L	0.55	0.75	0.95
Footprint	L1	1.25 REF		
Lead Thickness	c	0.09	–	0.25
Foot Angle	ϕ	0°	4°	8°
Lead Width	b	0.22	–	0.38

Notes:

1. Pin 1 visual index feature may vary, but must be located within the hatched area.
2. Dimensions D and E1 do not include mold flash or protrusions. Mold flash or protrusions shall not exceed 0.20 mm per side.
3. Dimensioning and tolerancing per ASME Y14.5M.

   BSC: Basic Dimension. Theoretically exact value shown without tolerances.

   REF: Reference Dimension, usually without tolerance, for information purposes only.

Microchip Technology Drawing C04-073B

28-Lead Plastic Shrink Small Outline (SS) - 5.30 mm Body [SSOP]

Note: For the most current package drawings, please see the Microchip Packaging Specification located at http://www.microchip.com/packaging

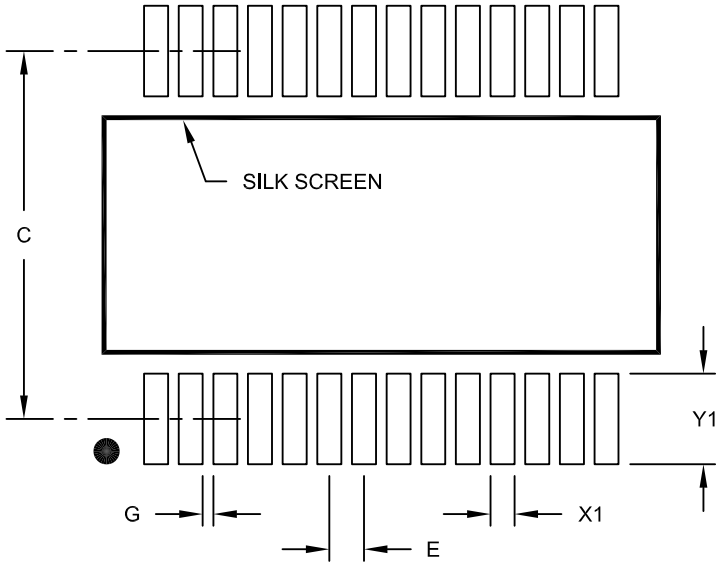

RECOMMENDED LAND PATTERN

Units		MILLIMETERS		
Dimension Limits		MIN	NOM	MAX
Contact Pitch	E	0.65 BSC		
Contact Pad Spacing	C		7.20	
Contact Pad Width (X28)	X1			0.45
Contact Pad Length (X28)	Y1			1.75
Distance Between Pads	G	0.20		

Notes:

1. Dimensioning and tolerancing per ASME Y14.5M
   BSC: Basic Dimension. Theoretically exact value shown without tolerances.

Microchip Technology Drawing No. C04-2073A

28-Lead Skinny Plastic Dual In-Line (SP) – 300 mil Body [SPDIP]

Note: For the most current package drawings, please see the Microchip Packaging Specification located at http://www.microchip.com/packaging

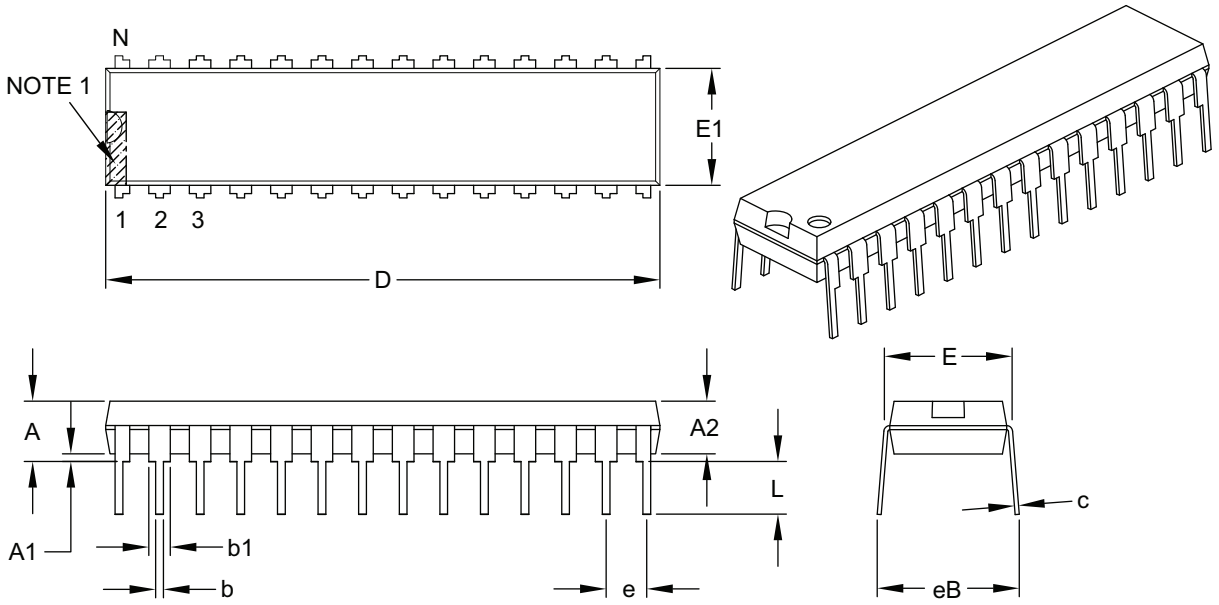

Units		INCHES		
Dimension Limits		MIN	NOM	MAX
Number of Pins	N	28		
Pitch	e	.100 BSC		
Top to Seating Plane	A	–	–	.200
Molded Package Thickness	A2	.120	.135	.150
Base to Seating Plane	A1	.015	–	–
Shoulder to Shoulder Width	E	.290	.310	.335
Molded Package Width	E1	.240	.285	.295
Overall Length	D	1.345	1.365	1.400
Tip to Seating Plane	L	.110	.130	.150
Lead Thickness	c	.008	.010	.015
Upper Lead Width	b1	.040	.050	.070
Lower Lead Width	b	.014	.018	.022
Overall Row Spacing §	eB	–	–	.430

Notes:
1. Pin 1 visual index feature may vary, but must be located within the hatched area.
2. § Significant Characteristic.
3. Dimensions D and E1 do not include mold flash or protrusions. Mold flash or protrusions shall not exceed .010" per side.
4. Dimensioning and tolerancing per ASME Y14.5M.
   BSC: Basic Dimension. Theoretically exact value shown without tolerances.

Microchip Technology Drawing C04-070B

28-Lead Plastic Small Outline (SO) - Wide, 7.50 mm Body [SOIC]

Note: For the most current package drawings, please see the Microchip Packaging Specification located at http://www.microchip.com/packaging

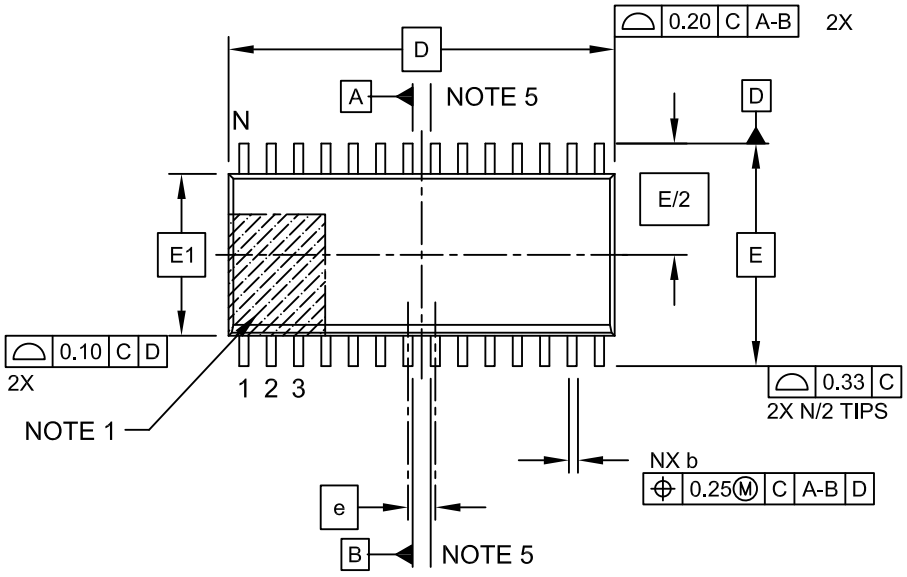

TOP VIEW

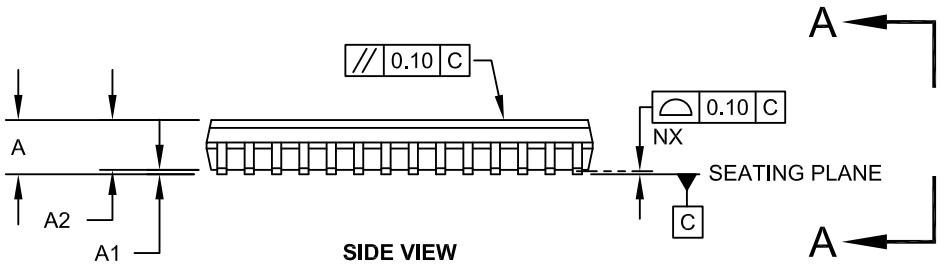

SIDE VIEW

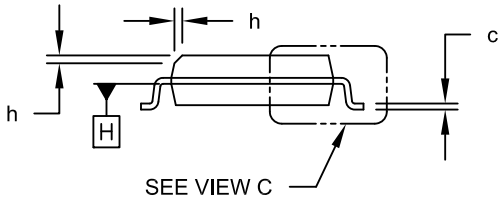

VIEW A-A

Microchip Technology Drawing C04-052C Sheet 1 of 2

28-Lead Plastic Small Outline (SO) - Wide, 7.50 mm Body [SOIC]

Note: For the most current package drawings, please see the Microchip Packaging Specification located at http://www.microchip.com/packaging

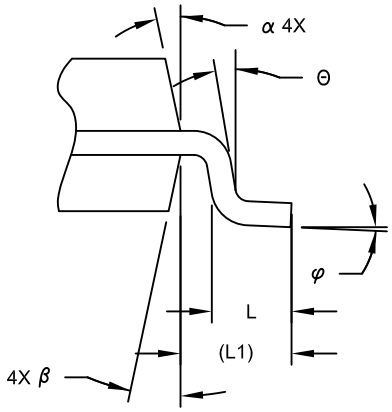

VIEW C

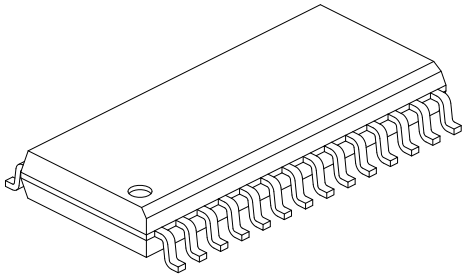

Units		MILLIMETERS		
Dimension Limits		MIN	NOM	MAX
Number of Pins	N	28		
Pitch	e	1.27 BSC		
Overall Height	A	-	-	2.65
Molded Package Thickness	A2	2.05	-	-
Standoff §	A1	0.10	-	0.30
Overall Width	E	10.30 BSC		
Molded Package Width	E1	7.50 BSC		
Overall Length	D	17.90 BSC		
Chamfer (Optional)	h	0.25	-	0.75
Foot Length	L	0.40	-	1.27
Footprint	L1	1.40 REF		
Lead Angle	Θ	0°	-	-
Foot Angle	φ	0°	-	8°
Lead Thickness	c	0.18	-	0.33
Lead Width	b	0.31	-	0.51
Mold Draft Angle Top	α	5°	-	15°
Mold Draft Angle Bottom	β	5°	-	15°

Notes:

1. Pin 1 visual index feature may vary, but must be located within the hatched area.
2. § Significant Characteristic
3. Dimension D does not include mold flash, protrusions or gate burrs, which shall not exceed 0.15 mm per end. Dimension E1 does not include interlead flash or protrusion, which shall not exceed 0.25 mm per side.
4. Dimensioning and tolerancing per ASME Y14.5M
   BSC: Basic Dimension. Theoretically exact value shown without tolerances.
   REF: Reference Dimension, usually without tolerance, for information purposes only.
5. Datums A & B to be determined at Datum H.

Microchip Technology Drawing C04-052C Sheet 2 of 2

28-Lead Plastic Small Outline (SO) - Wide, 7.50 mm Body [SOIC]

Note: For the most current package drawings, please see the Microchip Packaging Specification located at http://www.microchip.com/packaging

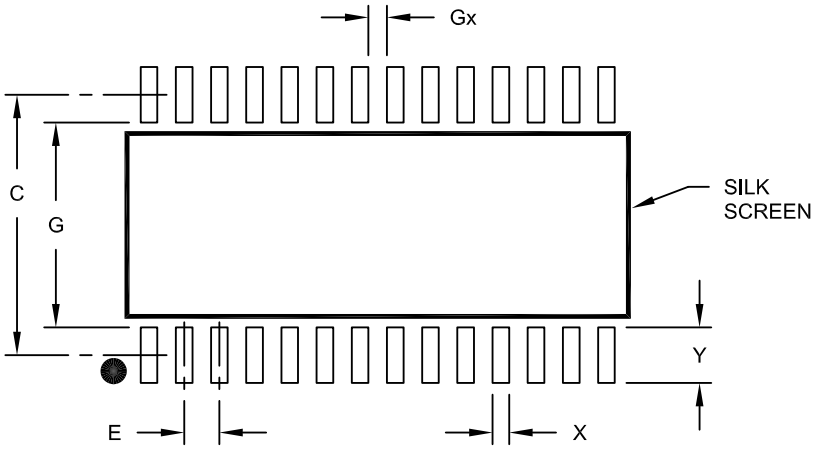

RECOMMENDED LAND PATTERN

Units		MILLIMETERS		
Dimension Limits		MIN	NOM	MAX
Contact Pitch	E		1.27 BSC	
Contact Pad Spacing	C		9.40	
Contact Pad Width (X28)	X			0.60
Contact Pad Length (X28)	Y			2.00
Distance Between Pads	Gx	0.67		
Distance Between Pads	G	7.40		

Notes:

1. Dimensioning and tolerancing per ASME Y14.5M

BSC: Basic Dimension. Theoretically exact value shown without tolerances.

Microchip Technology Drawing No. C04-2052A

28-Lead Plastic Ultra Thin Quad Flat, No Lead Package (MV) – 4x4x0.5 mm Body [UQFN]

Note: For the most current package drawings, please see the Microchip Packaging Specification located at http://www.microchip.com/packaging

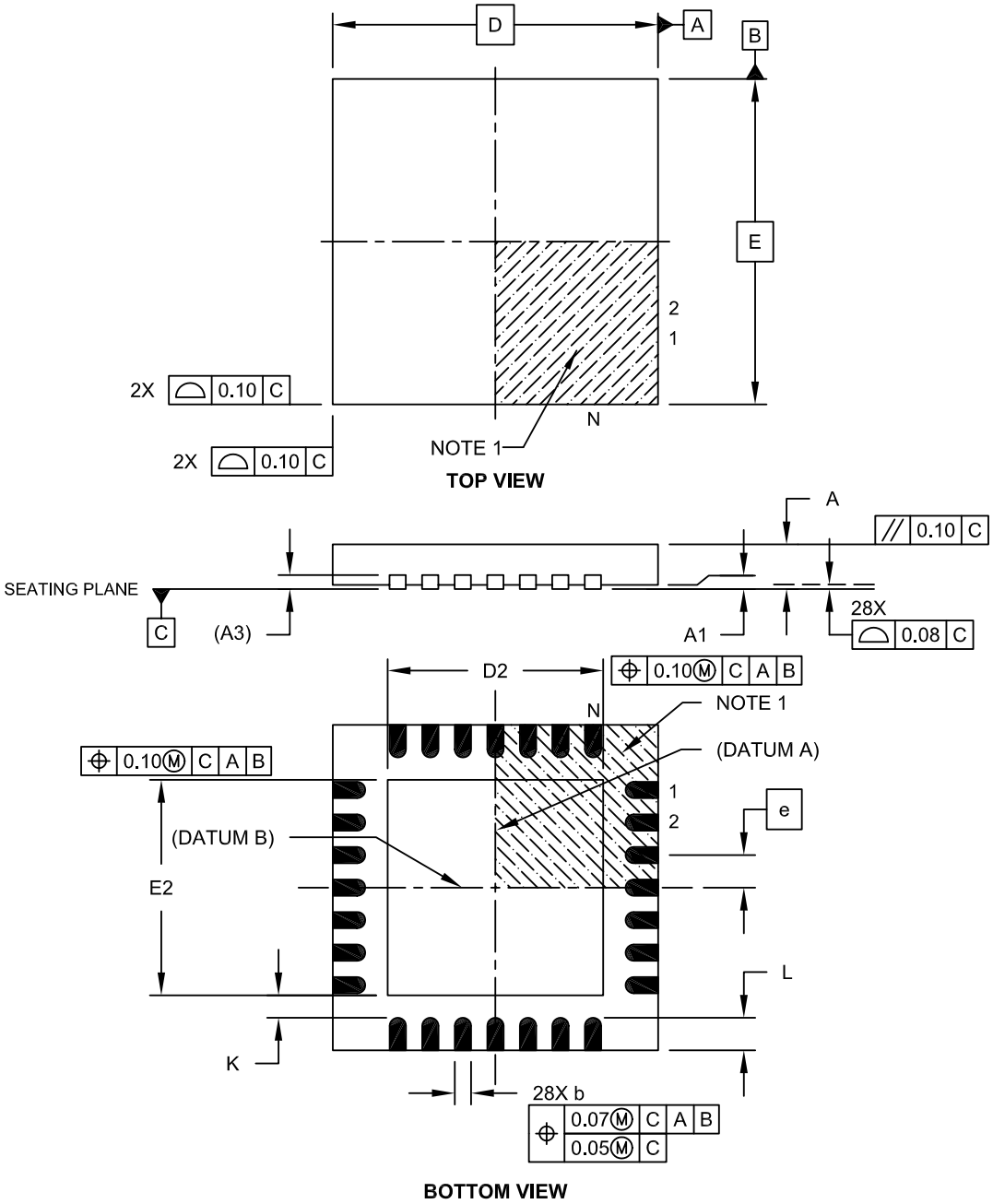

Microchip Technology Drawing C04-152A Sheet 1 of 2

28-Lead Plastic Ultra Thin Quad Flat, No Lead Package (MV) – 4x4x0.5 mm Body [UQFN]

Note: For the most current package drawings, please see the Microchip Packaging Specification located at http://www.microchip.com/packaging

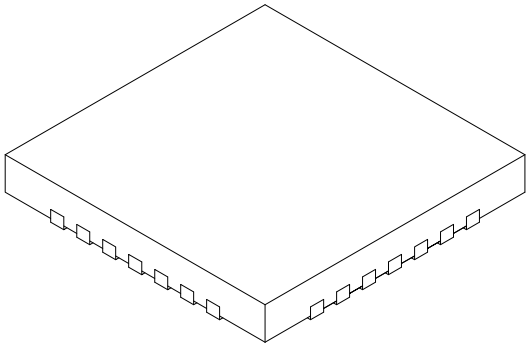

Units		MILLIMETERS		
Dimension Limits		MIN	NOM	MAX
Number of Pins	N	28		
Pitch	e	0.40 BSC		
Overall Height	A	0.45	0.50	0.55
Standoff	A1	0.00	0.02	0.05
Contact Thickness	A3	0.127 REF		
Overall Width	E	4.00 BSC		
Exposed Pad Width	E2	2.55	2.65	2.75
Overall Length	D	4.00 BSC		
Exposed Pad Length	D2	2.55	2.65	2.75
Contact Width	b	0.15	0.20	0.25
Contact Length	L	0.30	0.40	0.50
Contact-to-Exposed Pad	K	0.20	-	-

Notes:

1. Pin 1 visual index feature may vary, but must be located within the hatched area.
2. Package is saw singulated.
3. Dimensioning and tolerancing per ASME Y14.5M.
   BSC: Basic Dimension. Theoretically exact value shown without tolerances.
   REF: Reference Dimension, usually without tolerance, for information purposes only.

Microchip Technology Drawing C04-152A Sheet 2 of 2

28-Lead Ultra Thin Plastic Quad Flat, No Lead Package (MV) - 4x4 mm Body [UQFN]
With 0.40 mm Contact Length

Note: For the most current package drawings, please see the Microchip Packaging Specification located at http://www.microchip.com/packaging

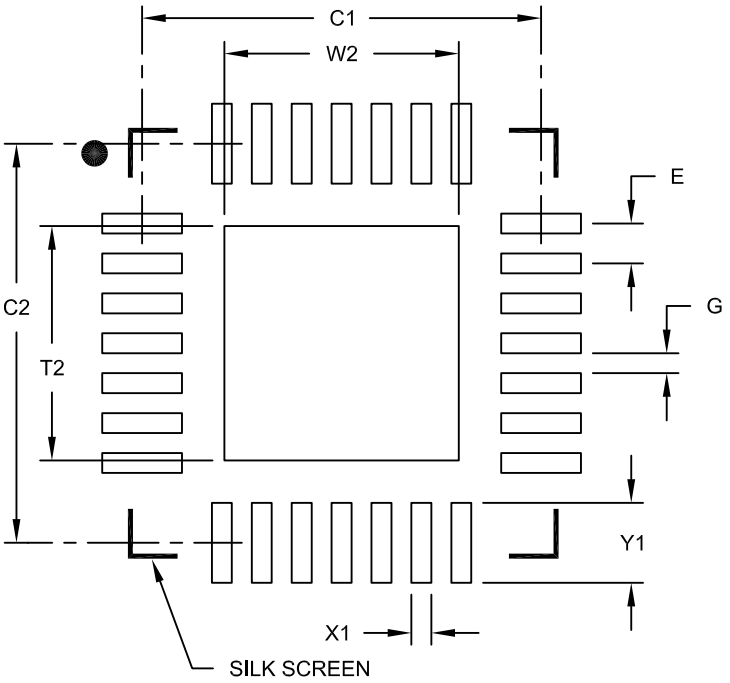

RECOMMENDED LAND PATTERN

Units		MILLIMETERS		
Dimension Limits		MIN	NOM	MAX
Contact Pitch	E		0.40 BSC	
Optional Center Pad Width	W2			2.35
Optional Center Pad Length	T2			2.35
Contact Pad Spacing	C1		4.00	
Contact Pad Spacing	C2		4.00	
Contact Pad Width (X28)	X1			0.20
Contact Pad Length (X28)	Y1			0.80
Distance Between Pads	G	0.20		

Notes:

1. Dimensioning and tolerancing per ASME Y14.5M
   BSC: Basic Dimension. Theoretically exact value shown without tolerances.

Microchip Technology Drawing No. C04-2152A

40-Lead Plastic Dual In-Line (P) – 600 mil Body [PDIP]

Note: For the most current package drawings, please see the Microchip Packaging Specification located at http://www.microchip.com/packaging

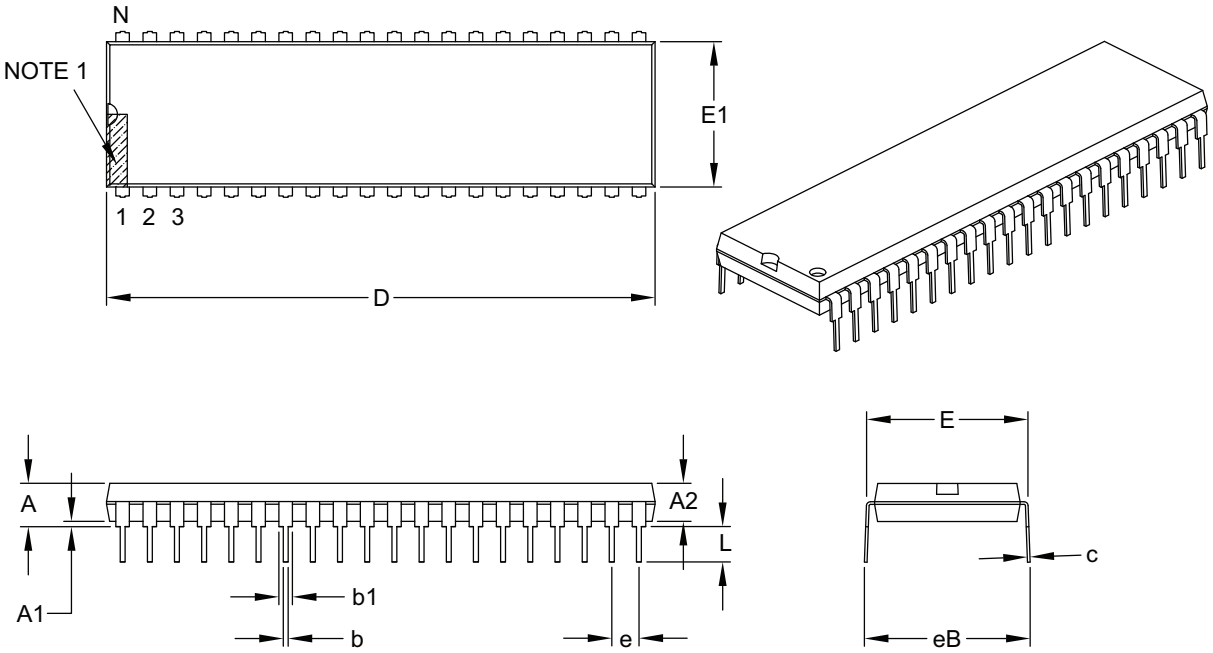

Units		INCHES		
Dimension Limits		MIN	NOM	MAX
Number of Pins	N	40		
Pitch	e	.100 BSC		
Top to Seating Plane	A	–	–	.250
Molded Package Thickness	A2	.125	–	.195
Base to Seating Plane	A1	.015	–	–
Shoulder to Shoulder Width	E	.590	–	.625
Molded Package Width	E1	.485	–	.580
Overall Length	D	1.980	–	2.095
Tip to Seating Plane	L	.115	–	.200
Lead Thickness	c	.008	–	.015
Upper Lead Width	b1	.030	–	.070
Lower Lead Width	b	.014	–	.023
Overall Row Spacing §	eB	–	–	.700

Notes:

1. Pin 1 visual index feature may vary, but must be located within the hatched area.
2. § Significant Characteristic.
3. Dimensions D and E1 do not include mold flash or protrusions. Mold flash or protrusions shall not exceed .010" per side.
4. Dimensioning and tolerancing per ASME Y14.5M.

   BSC: Basic Dimension. Theoretically exact value shown without tolerances.

Microchip Technology Drawing C04-016B

40-Lead Ultra Thin Plastic Quad Flat, No Lead Package (MV) – 5x5x0.5 mm Body [UQFN]

Note: For the most current package drawings, please see the Microchip Packaging Specification located at http://www.microchip.com/packaging

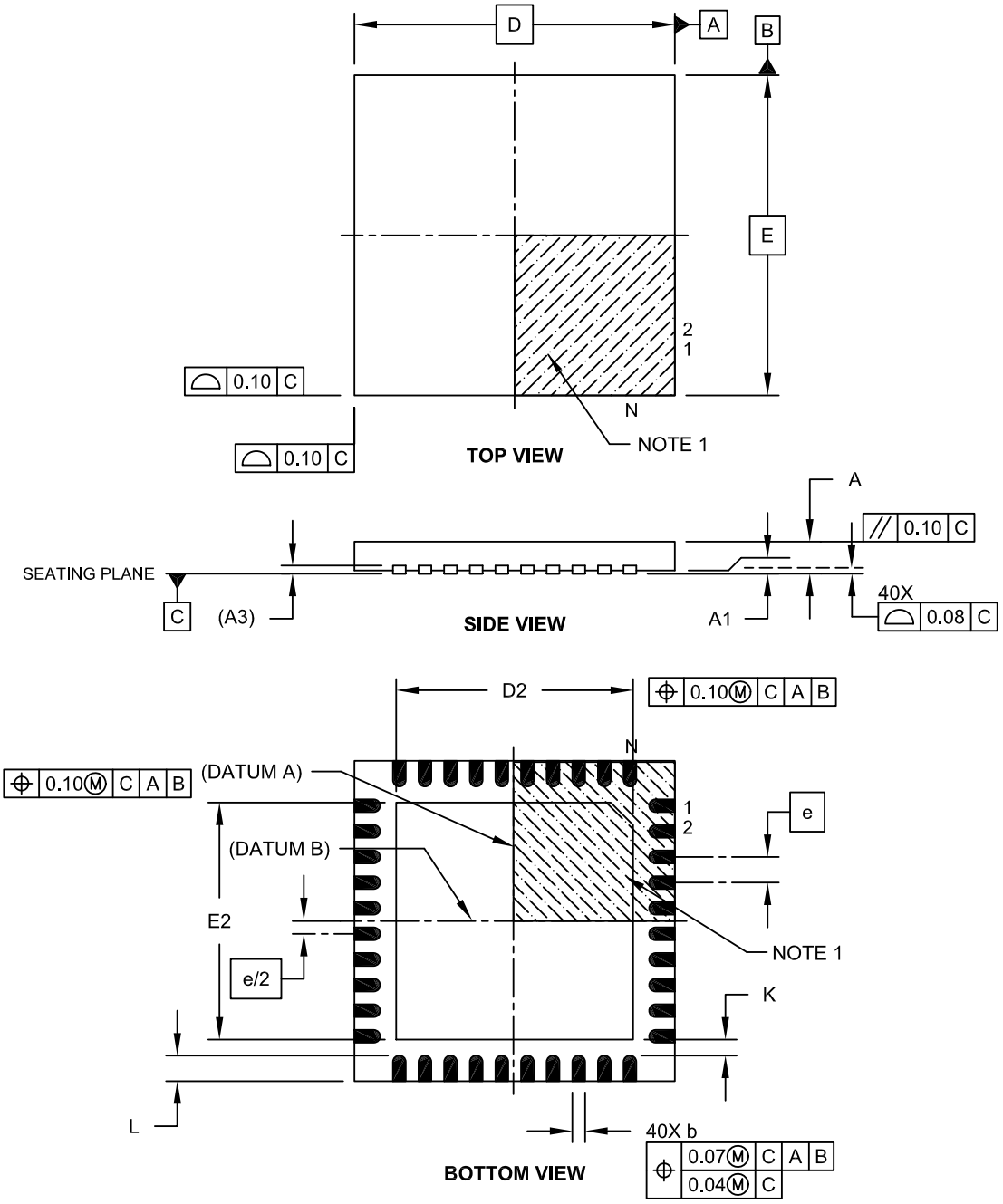

Microchip Technology Drawing C04-156A Sheet 1 of 2

40-Lead Ultra Thin Plastic Quad Flat, No Lead Package (MV) – 5x5x0.5 mm Body [UQFN]

Note: For the most current package drawings, please see the Microchip Packaging Specification located at http://www.microchip.com/packaging

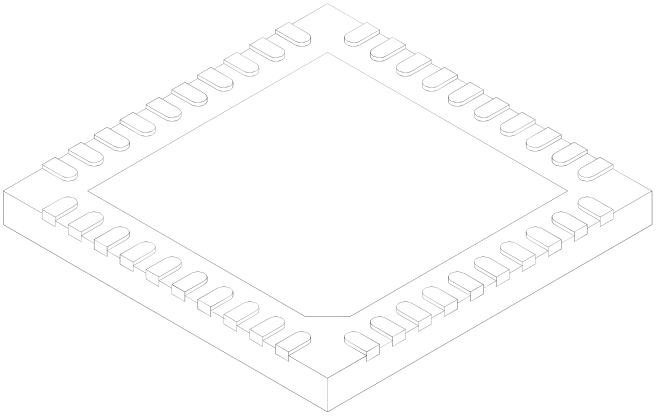

Units		MILLIMETERS		
Dimension Limits		MIN	NOM	MAX
Number of Pins	N	40		
Pitch	e	0.40 BSC		
Overall Height	A	0.45	0.50	0.55
Standoff	A1	0.00	0.02	0.05
Contact Thickness	A3	0.127 REF		
Overall Width	E	5.00 BSC		
Exposed Pad Width	E2	3.60	3.70	3.80
Overall Length	D	5.00 BSC		
Exposed Pad Length	D2	3.60	3.70	3.80
Contact Width	b	0.15	0.20	0.25
Contact Length	L	0.30	0.40	0.50
Contact-to-Exposed Pad	K	0.20	-	-

Notes:

1. Pin 1 visual index feature may vary, but must be located within the hatched area.
2. Package is saw singulated.
3. Dimensioning and tolerancing per ASME Y14.5M.
   BSC: Basic Dimension. Theoretically exact value shown without tolerances.
   REF: Reference Dimension, usually without tolerance, for information purposes only.

Microchip Technology Drawing C04-156A Sheet 2 of 2

40-Lead Plastic Ultra Thin Quad Flat, No Lead Package (MV) - 5x5 mm Body [UQFN]

Note: For the most current package drawings, please see the Microchip Packaging Specification located at http://www.microchip.com/packaging

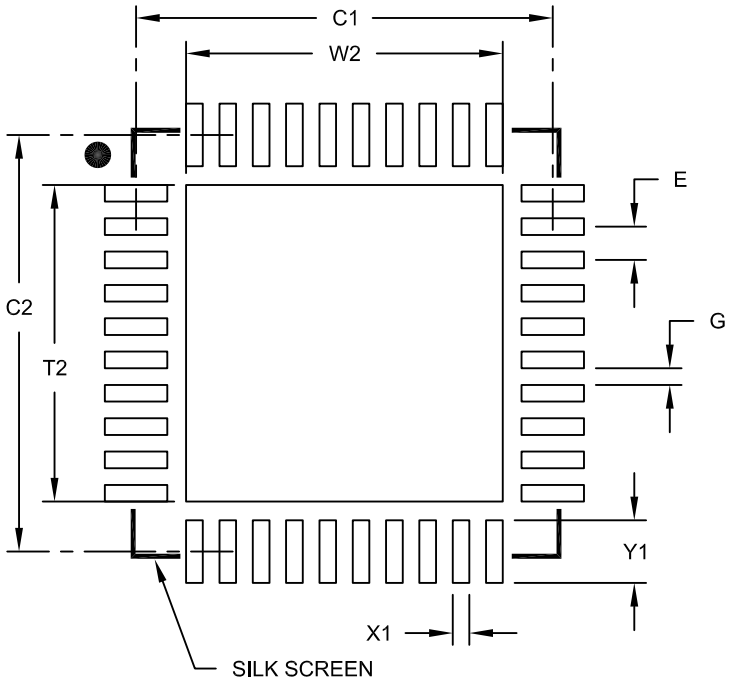

RECOMMENDED LAND PATTERN

Units		MILLIMETERS		
Dimension Limits		MIN	NOM	MAX
Contact Pitch	E		0.40 BSC	
Optional Center Pad Width	W2			3.80
Optional Center Pad Length	T2			3.80
Contact Pad Spacing	C1		5.00	
Contact Pad Spacing	C2		5.00	
Contact Pad Width (X40)	X1			0.20
Contact Pad Length (X40)	Y1			0.75
Distance Between Pads	G	0.20		

Notes:

1. Dimensioning and tolerancing per ASME Y14.5M
   BSC: Basic Dimension. Theoretically exact value shown without tolerances.

Microchip Technology Drawing No. C04-2156B

44-Lead Plastic Thin Quad Flatpack (PT) - 10x10x1.0 mm Body [TQFP]

Note: For the most current package drawings, please see the Microchip Packaging Specification located at http://www.microchip.com/packaging

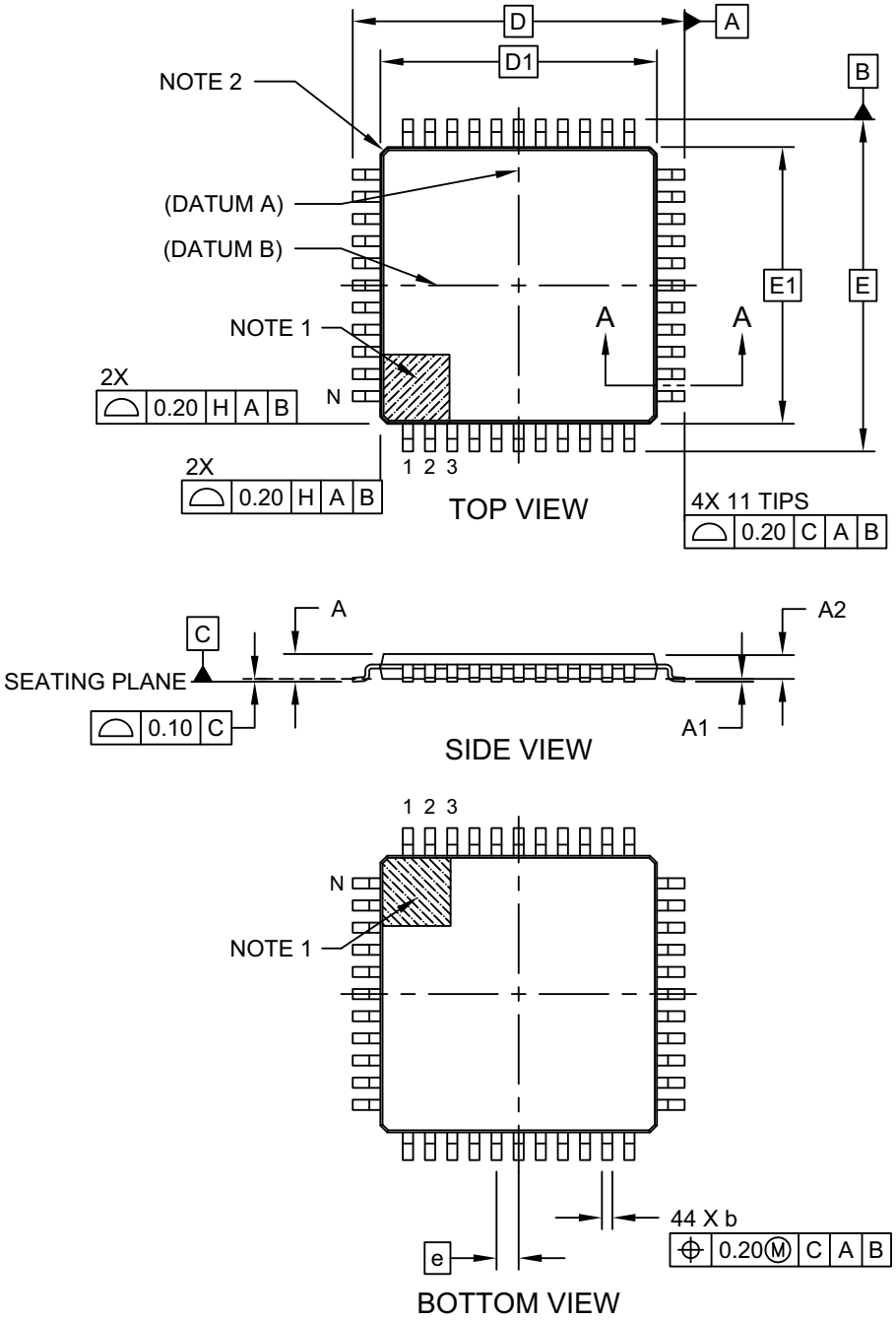

Microchip Technology Drawing C04-076C Sheet 1 of 2

44-Lead Plastic Thin Quad Flatpack (PT) - 10x10x1.0 mm Body [TQFP]

Note: For the most current package drawings, please see the Microchip Packaging Specification located at http://www.microchip.com/packaging

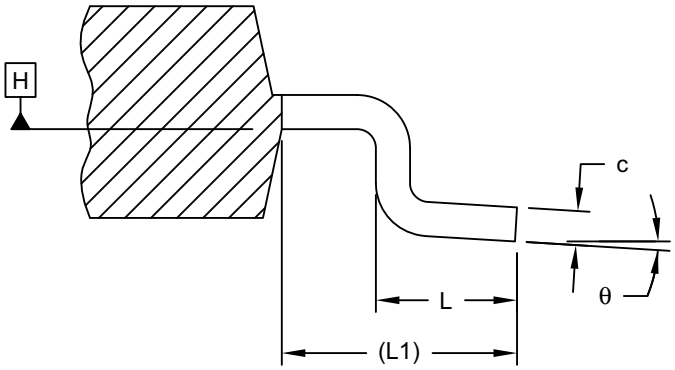

SECTION A-A

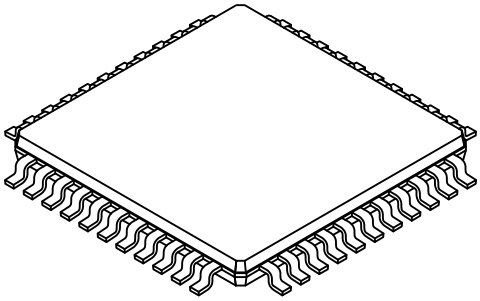

Units		MILLIMETERS		
Dimension Limits		MIN	NOM	MAX
Number of Leads	N	44		
Lead Pitch	e	0.80 BSC		
Overall Height	A	-	-	1.20
Standoff	A1	0.05	-	0.15
Molded Package Thickness	A2	0.95	1.00	1.05
Overall Width	E	12.00 BSC		
Molded Package Width	E1	10.00 BSC		
Overall Length	D	12.00 BSC		
Molded Package Length	D1	10.00 BSC		
Lead Width	b	0.30	0.37	0.45
Lead Thickness	c	0.09	-	0.20
Lead Length	L	0.45	0.60	0.75
Footprint	L1	1.00 REF		
Foot Angle	θ	0°	3.5°	7°

Notes:

1. Pin 1 visual index feature may vary, but must be located within the hatched area.
2. Exact shape of each corner is optional.
3. Dimensioning and tolerancing per ASME Y14.5M

   BSC: Basic Dimension. Theoretically exact value shown without tolerances.

   REF: Reference Dimension, usually without tolerance, for information purposes only.

Microchip Technology Drawing C04-076C Sheet 2 of 2

44-Lead Plastic Thin Quad Flatpack (PT) - 10X10X1 mm Body, 2.00 mm Footprint [TQFP]

Note: For the most current package drawings, please see the Microchip Packaging Specification located at http://www.microchip.com/packaging

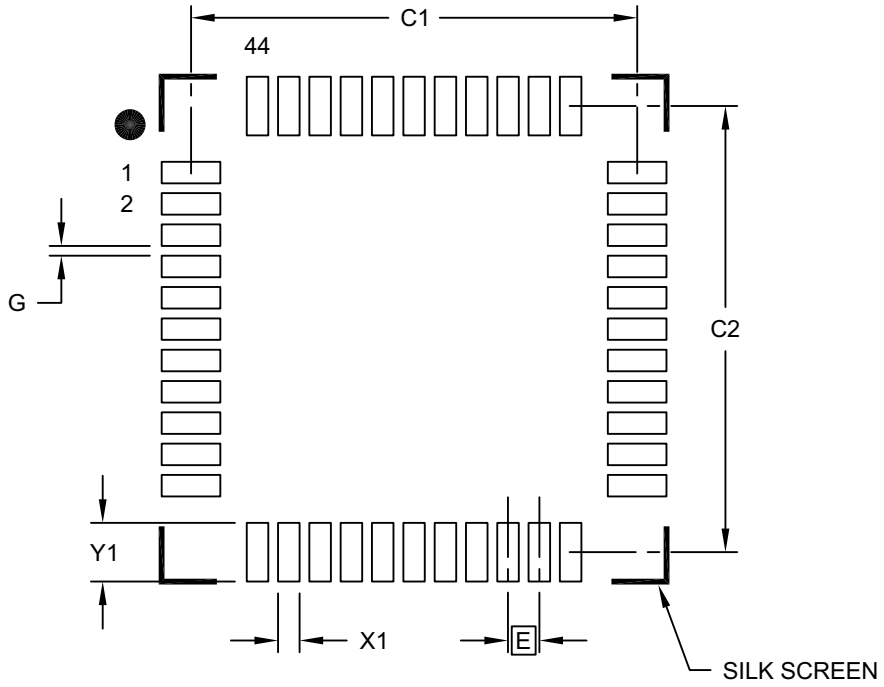

RECOMMENDED LAND PATTERN

Units		MILLIMETERS		
Dimension Limits		MIN	NOM	MAX
Contact Pitch	E		0.80 BSC	
Contact Pad Spacing	C1		11.40	
Contact Pad Spacing	C2		11.40	
Contact Pad Width (X44)	X1			0.55
Contact Pad Length (X44)	Y1			1.50
Distance Between Pads	G	0.25		

Notes:

1. Dimensioning and tolerancing per ASME Y14.5M
   BSC: Basic Dimension. Theoretically exact value shown without tolerances.

Microchip Technology Drawing No. C04-2076B

48-Lead Thin Quad Flatpack (PT) - 7x7x1.0 mm Body [TQFP]

Note: For the most current package drawings, please see the Microchip Packaging Specification located at http://www.microchip.com/packaging

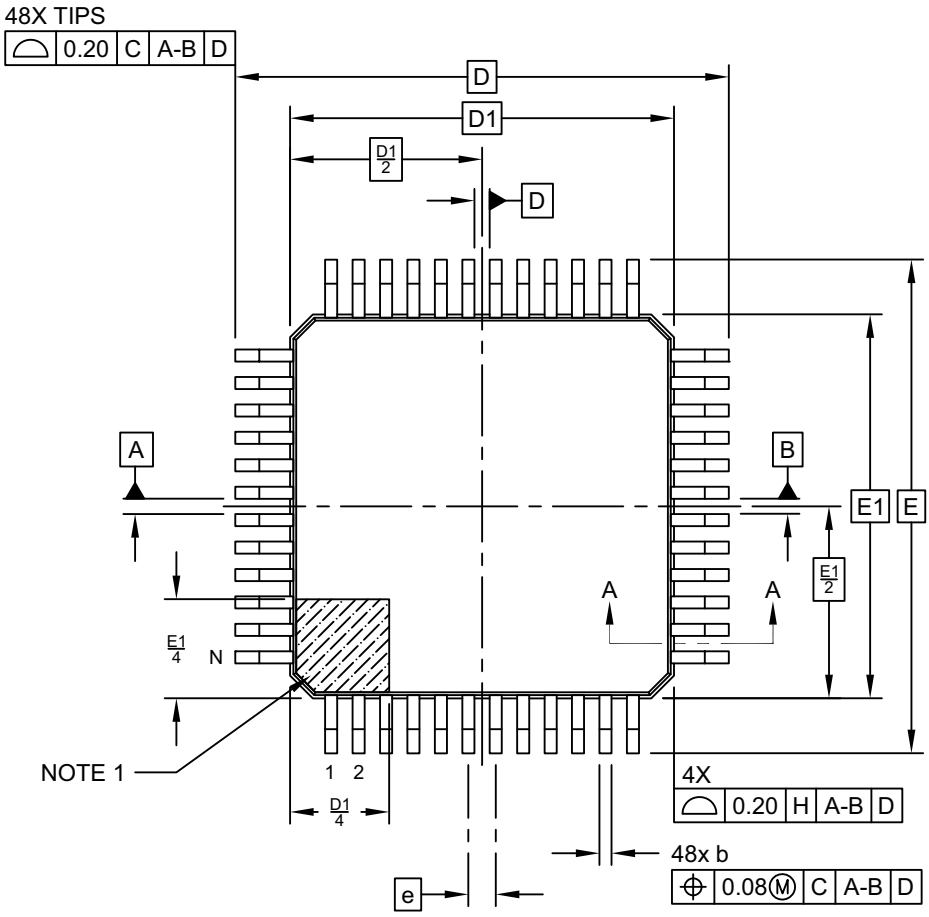

TOP VIEW

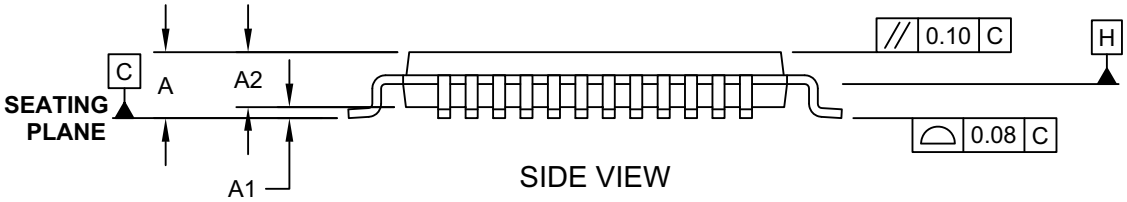

SIDE VIEW

Microchip Technology Drawing C04-300-PT Rev A Sheet 1 of 2

48-Lead Thin Quad Flatpack (PT) - 7x7x1.0 mm Body [TQFP]

Note: For the most current package drawings, please see the Microchip Packaging Specification located at http://www.microchip.com/packaging

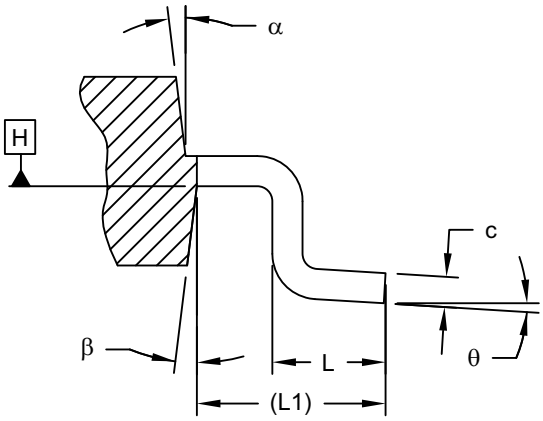

SECTION A-A

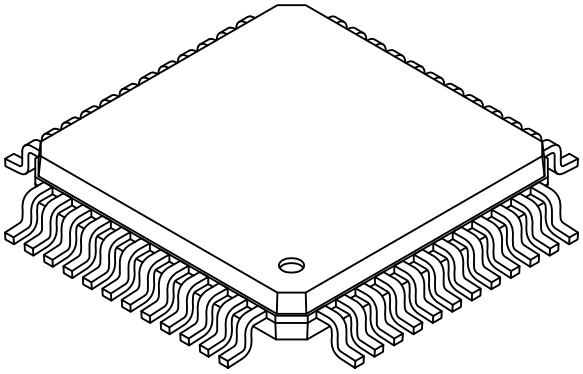

Units		MILLIMETERS		
Dimension Limits		MIN	NOM	MAX
Number of Leads	N	48		
Lead Pitch	e	0.50 BSC		
Overall Height	A	-	-	1.20
Standoff	A1	0.05	-	0.15
Molded Package Thickness	A2	0.95	1.00	1.05
Foot Length	L	0.45	0.60	0.75
Footprint	L1	1.00 REF		
Foot Angle	ϕ	0°	3.5°	7°
Overall Width	E	9.00 BSC		
Overall Length	D	9.00 BSC		
Molded Package Width	E1	7.00 BSC		
Molded Package Length	D1	7.00 BSC		
Lead Thickness	c	0.09	-	0.16
Lead Width	b	0.17	0.22	0.27
Mold Draft Angle Top	α	11°	12°	13°
Mold Draft Angle Bottom	β	11°	12°	13°

Notes:

1. Pin 1 visual index feature may vary, but must be located within the hatched area.
2. Chamfers at corners are optional; size may vary.
3. Dimensions D1 and E1 do not include mold flash or protrusions. Mold flash or protrusions shall not exceed 0.25mm per side.
4. Dimensioning and tolerancing per ASME Y14.5M
   BSC: Basic Dimension. Theoretically exact value shown without tolerances.
   REF: Reference Dimension, usually without tolerance, for information purposes only.
5. Datums A-B and D to be determined at center line between leads where leads exit plastic body at datum plane H

Microchip Technology Drawing C04-300-PT Rev A Sheet 2 of 2

48-Lead Thin Quad Flatpack (PT) - 7x7x1.0 mm Body [TQFP]

Note: For the most current package drawings, please see the Microchip Packaging Specification located at http://www.microchip.com/packaging

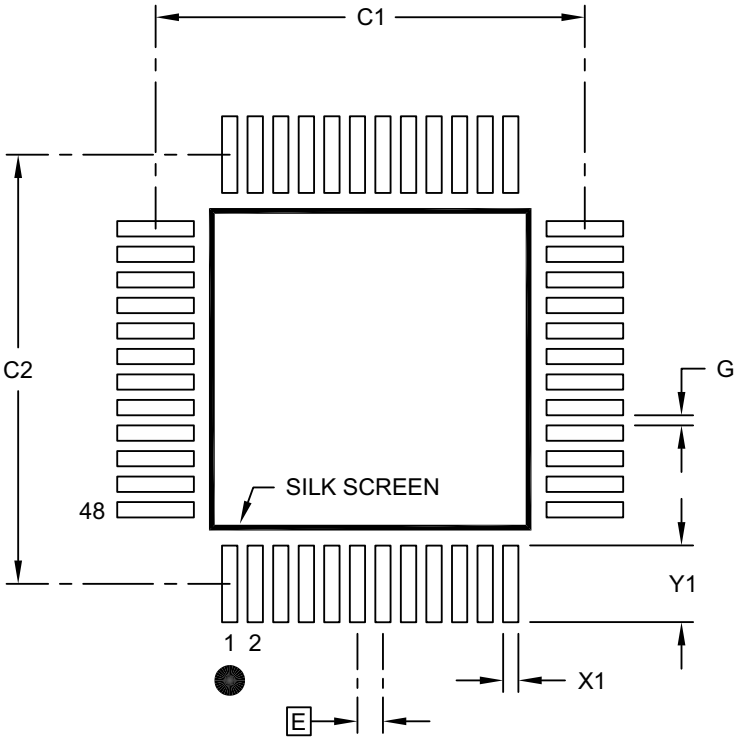

RECOMMENDED LAND PATTERN

Units		MILLIMETERS		
Dimension Limits		MIN	NOM	MAX
Contact Pitch	E		0.50 BSC	
Contact Pad Spacing	C1		8.40	
Contact Pad Spacing	C2		8.40	
Contact Pad Width (X48)	X1			0.30
Contact Pad Length (X48)	Y1			1.50
Distance Between Pads	G	0.20		

Notes:

1. Dimensioning and tolerancing per ASME Y14.5M
   BSC: Basic Dimension. Theoretically exact value shown without tolerances.
2. For best soldering results, thermal vias, if used, should be filled or tented to avoid solder loss during reflow process

Microchip Technology Drawing C04-2300-PT Rev A

48-Lead Plastic Ultra Thin Quad Flat, No Lead Package (MV) – 6x6x0.5 mm Body [UQFN]

Note: For the most current package drawings, please see the Microchip Packaging Specification located at http://www.microchip.com/packaging

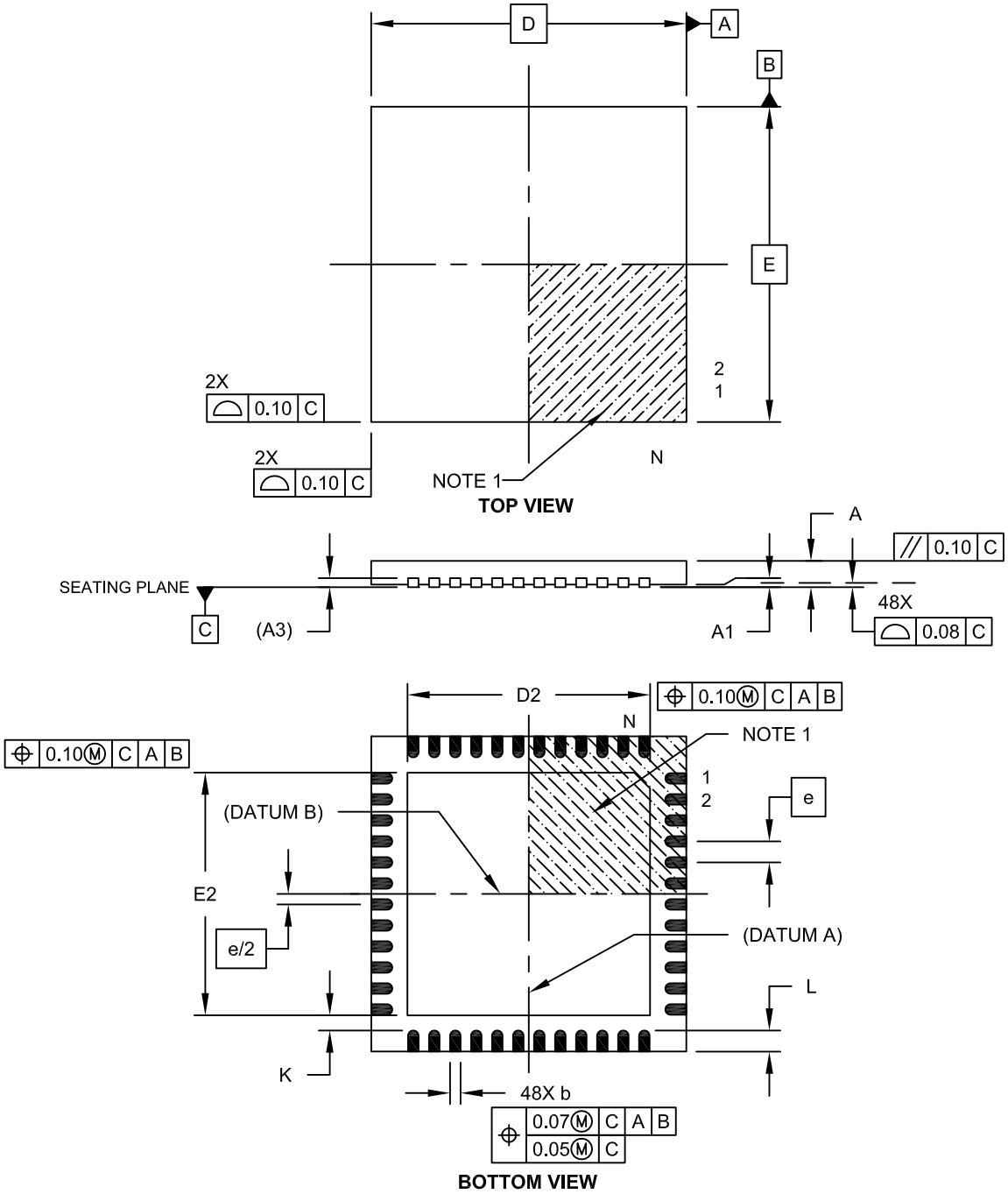

Microchip Technology Drawing C04-153A Sheet 1 of 2

48-Lead Plastic Ultra Thin Quad Flat, No Lead Package (MV) – 6x6x0.5 mm Body [UQFN]

Note: For the most current package drawings, please see the Microchip Packaging Specification located at http://www.microchip.com/packaging

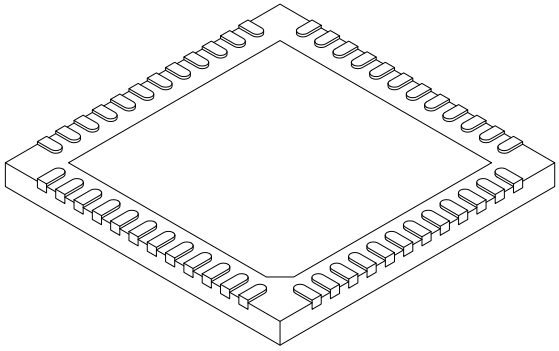

Units		MILLIMETERS		
Dimension Limits		MIN	NOM	MAX
Number of Pins	N	48		
Pitch	e	0.40 BSC		
Overall Height	A	0.45	0.50	0.55
Standoff	A1	0.00	0.02	0.05
Contact Thickness	A3	0.127 REF		
Overall Width	E	6.00 BSC		
Exposed Pad Width	E2	4.45	4.60	4.75
Overall Length	D	6.00 BSC		
Exposed Pad Length	D2	4.45	4.60	4.75
Contact Width	b	0.15	0.20	0.25
Contact Length	L	0.30	0.40	0.50
Contact-to-Exposed Pad	K	0.20	-	-

Notes:

1. Pin 1 visual index feature may vary, but must be located within the hatched area.
2. Package is saw singulated.
3. Dimensioning and tolerancing per ASME Y14.5M.
   BSC: Basic Dimension. Theoretically exact value shown without tolerances.
   REF: Reference Dimension, usually without tolerance, for information purposes only.

Microchip Technology Drawing C04-153A Sheet 2 of 2

48-Lead Ultra Thin Plastic Quad Flat, No Lead Package (MV) - 6x6 mm Body [UQFN]
With 0.40 mm Contact Length

Note: For the most current package drawings, please see the Microchip Packaging Specification located at http://www.microchip.com/packaging

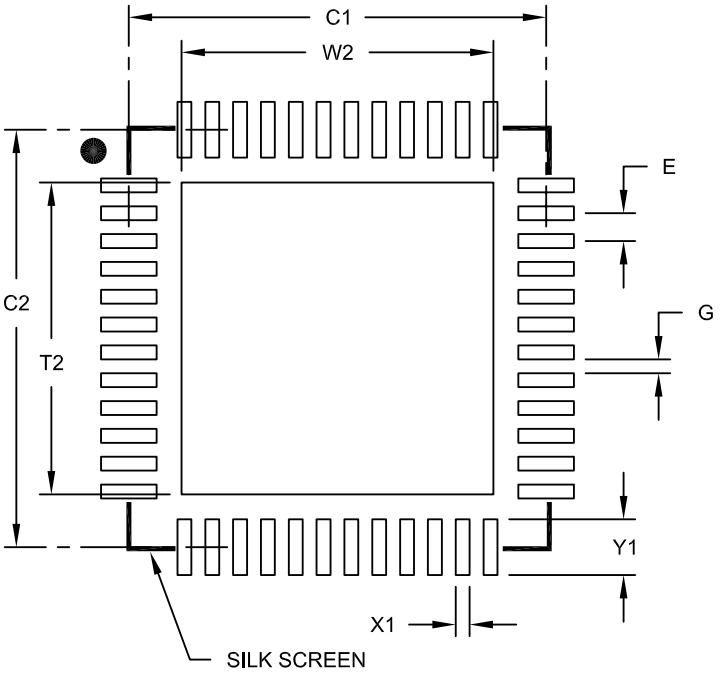

RECOMMENDED LAND PATTERN

Units		MILLIMETERS		
Dimension Limits		MIN	NOM	MAX
Contact Pitch	E		0.40 BSC	
Optional Center Pad Width	W2			4.45
Optional Center Pad Length	T2			4.45
Contact Pad Spacing	C1		6.00	
Contact Pad Spacing	C2		6.00	
Contact Pad Width (X28)	X1			0.20
Contact Pad Length (X28)	Y1			0.80
Distance Between Pads	G	0.20		

Notes:

1. Dimensioning and tolerancing per ASME Y14.5M
   BSC: Basic Dimension. Theoretically exact value shown without tolerances.

Microchip Technology Drawing No. C04-2153A

APPENDIX A: DATA SHEET REVISION HISTORY

Revision B (6/2019)

Removed Figures 35-11: Type-A Waveforms in 1/2 Mux, 1/3 Bias Drive; Figure 35-12: Type-B Waveforms in 1/2 Mux, 1/3 Bias Drive; Figure 35-13: Type-A Waveforms in 1/3 Mux, 1/2 Bias Drive; and Figure 35-16: Type-B Waveforms in 1/3 Mux, 1/2 Bias Drive.

Updated Equation 19-1; Figures 15-1, 19-2, 24-2, 24-3, 35-6, and 35-7; Registers 5-1, 11-1, 12-2, 14-1, 14-2, 14-5, 14-25 through 14-40, 19-36, 24-1, 26-3, 27-1, 28-5, 29-5, and 35-6; Sections 9.2.2.3, 14.8, 14.10.6, 14-.0.7, 19.1.2, 24.0, 24.1, 24.1.1, 24.1.2, 24.1.3, 35.0, 35.1, 35.2, 35.3, 35.3.1, 35.4, 35.5, 35.5.1, 35.5.2, 35.5.3, 35.6.1, 35.6.4, 35.7, 35.7.2, 35.7.3, 35.7.4, 35.7.5, 35.8, and 35.11; and Tables 1-2, 4-1, 4-4, 4-5, 4-10, 4-12, 13-1, 13-2, 14-5, 14-6, 17-1, 19-1, 30-3, 38-1, 39-2, 39-3, 39-7, 39-12, 39-14, 39-15, 39-16, and 39-18.

Removed Preliminary status.

Added Characterization Data.

Revision A (6/2017)

This is the initial release of the document.

THE MICROCHIP WEBSITE

Microchip provides online support via our WWW site at www.microchip.com. This website is used as a means to make files and information easily available to customers. Accessible by using your favorite Internet browser, the website contains the following information:

- **Product Support** – Data sheets and errata, application notes and sample programs, design resources, user's guides and hardware support documents, latest software releases and archived software
- **General Technical Support** – Frequently Asked Questions (FAQ), technical support requests, online discussion groups, Microchip consultant program member listing
- **Business of Microchip** – Product selector and ordering guides, latest Microchip press releases, listing of seminars and events, listings of Microchip sales offices, distributors and factory representatives

CUSTOMER CHANGE NOTIFICATION SERVICE

Microchip's customer notification service helps keep customers current on Microchip products. Subscribers will receive e-mail notification whenever there are changes, updates, revisions or errata related to a specified product family or development tool of interest.

To register, access the Microchip website at www.microchip.com. Under "Support", click on "Customer Change Notification" and follow the registration instructions.

CUSTOMER SUPPORT

Users of Microchip products can receive assistance through several channels:

- Distributor or Representative
- Local Sales Office
- Field Application Engineer (FAE)
- Technical Support

Customers should contact their distributor, representative or Field Application Engineer (FAE) for support. Local sales offices are also available to help customers. A listing of sales offices and locations is included in the back of this document.

Technical support is available through the website at: http://microchip.com/support

PRODUCT IDENTIFICATION SYSTEM

To order or obtain information, e.g., on pricing or delivery, refer to the factory or the listed sales office.

PART NO.	[X](1)	-	X	/XX	XXX
Device	Tape and Reel Option		Temperature Range	Package	Pattern

Device:	PIC16F19155, PIC16(L)F19155 PIC16F19156, PIC16(L)F19156 PIC16F19175, PIC16(L)F19175 PIC16F19176, PIC16(L)F19176 PIC16F19185, PIC16(L)F19185 PIC16F19186, PIC16(L)F19186
Tape and Reel Option:	Blank = Standard packaging (tube or tray) T = Tape and Reel(1)
Temperature Range:	I = -40°C to +85°C (Industrial) E = -40°C to +125°C (Extended)
Package:(2)	SS = 28-lead SSOP SO = 28-lead SOIC SP = 28-lead SPDIP MV = 28-lead UQFN P = 40-lead PDIP MV = 40-lead UQFN PT = 44-lead TQFP MV = 48-lead UQFN PT = 48-lead TQFP
Pattern:	QTP, SQTP, Code or Special Requirements (blank otherwise)

Examples:

a) PIC16(L)F19185/86 - I/PT
Industrial temperature
TQFP package

Note 1: Tape and Reel identifier only appears in the catalog part number description. This identifier is used for ordering purposes and is not printed on the device package. Check with your Microchip Sales Office for package availability with the Tape and Reel option.

2: Small form-factor packaging options may be available. Please check www.microchip.com/packaging for small-form factor package availability, or contact your local Sales Office.

Note the following details of the code protection feature on Microchip devices:

- Microchip products meet the specification contained in their particular Microchip Data Sheet.
- Microchip believes that its family of products is one of the most secure families of its kind on the market today, when used in the intended manner and under normal conditions.
- There are dishonest and possibly illegal methods used to breach the code protection feature. All of these methods, to our knowledge, require using the Microchip products in a manner outside the operating specifications contained in Microchip's Data Sheets. Most likely, the person doing so is engaged in theft of intellectual property.
- Microchip is willing to work with the customer who is concerned about the integrity of their code.
- Neither Microchip nor any other semiconductor manufacturer can guarantee the security of their code. Code protection does not mean that we are guaranteeing the product as "unbreakable."

Code protection is constantly evolving. We at Microchip are committed to continuously improving the code protection features of our products. Attempts to break Microchip's code protection feature may be a violation of the Digital Millennium Copyright Act. If such acts allow unauthorized access to your software or other copyrighted work, you may have a right to sue for relief under that Act.

Information contained in this publication regarding device applications and the like is provided only for your convenience and may be superseded by updates. It is your responsibility to ensure that your application meets with your specifications. MICROCHIP MAKES NO REPRESENTATIONS OR WARRANTIES OF ANY KIND WHETHER EXPRESS OR IMPLIED, WRITTEN OR ORAL, STATUTORY OR OTHERWISE, RELATED TO THE INFORMATION, INCLUDING BUT NOT LIMITED TO ITS CONDITION, QUALITY, PERFORMANCE, MERCHANTABILITY OR FITNESS FOR PURPOSE**.** Microchip disclaims all liability arising from this information and its use. Use of Microchip devices in life support and/or safety applications is entirely at the buyer's risk, and the buyer agrees to defend, indemnify and hold harmless Microchip from any and all damages, claims, suits, or expenses resulting from such use. No licenses are conveyed, implicitly or otherwise, under any Microchip intellectual property rights unless otherwise stated.

For information regarding Microchip's Quality Management Systems, please visit www.microchip.com/quality.

Trademarks

The Microchip name and logo, the Microchip logo, Adaptec, AnyRate, AVR, AVR logo, AVR Freaks, BesTime, BitCloud, chipKIT, chipKIT logo, CryptoMemory, CryptoRF, dsPIC, FlashFlex, flexPWR, HELDO, IGLOO, JukeBlox, KeeLoq, Kleer, LANCheck, LinkMD, maXStylus, maXTouch, MediaLB, megaAVR, Microsemi, Microsemi logo, MOST, MOST logo, MPLAB, OptoLyzer, PackeTime, PIC, picoPower, PICSTART, PIC32 logo, PolarFire, Prochip Designer, QTouch, SAM-BA, SenGenuity, SpyNIC, SST, SST Logo, SuperFlash, Symmetricom, SyncServer, Tachyon, TempTrackr, TimeSource, tinyAVR, UNI/O, Vectron, and XMEGA are registered trademarks of Microchip Technology Incorporated in the U.S.A. and other countries.

APT, ClockWorks, The Embedded Control Solutions Company, EtherSynch, FlashTec, Hyper Speed Control, HyperLight Load, IntelliMOS, Libero, motorBench, mTouch, Powermite 3, Precision Edge, ProASIC, ProASIC Plus, ProASIC Plus logo, Quiet-Wire, SmartFusion, SyncWorld, Temux, TimeCesium, TimeHub, TimePictra, TimeProvider, Vite, WinPath, and ZL are registered trademarks of Microchip Technology Incorporated in the U.S.A.

Adjacent Key Suppression, AKS, Analog-for-the-Digital Age, Any Capacitor, AnyIn, AnyOut, BlueSky, BodyCom, CodeGuard, CryptoAuthentication, CryptoAutomotive, CryptoCompanion, CryptoController, dsPICDEM, dsPICDEM.net, Dynamic Average Matching, DAM, ECAN, EtherGREEN, In-Circuit Serial Programming, ICSP, INICnet, Inter-Chip Connectivity, JitterBlocker, KleerNet, KleerNet logo, memBrain, Mindi, MiWi, MPASM, MPF, MPLAB Certified logo, MPLIB, MPLINK, MultiTRAK, NetDetach, Omniscient Code Generation, PICDEM, PICDEM.net, PICkit, PICtail, PowerSmart, PureSilicon, QMatrix, REAL ICE, Ripple Blocker, SAM-ICE, Serial Quad I/O, SMART-I.S., SQI, SuperSwitcher, SuperSwitcher II, Total Endurance, TSHARC, USBCheck, VariSense, ViewSpan, WiperLock, Wireless DNA, and ZENA are trademarks of Microchip Technology Incorporated in the U.S.A. and other countries.

SQTP is a service mark of Microchip Technology Incorporated in the U.S.A.

The Adaptec logo, Frequency on Demand, Silicon Storage Technology, and Symmcom are registered trademarks of Microchip Technology Inc. in other countries.

GestIC is a registered trademark of Microchip Technology Germany II GmbH & Co. KG, a subsidiary of Microchip Technology Inc., in other countries.

All other trademarks mentioned herein are property of their respective companies.

© 2017-2019, Microchip Technology Incorporated, All Rights Reserved.

ISBN: 978-1-5224-4639-2

Worldwide Sales and Service

AMERICAS

Corporate Office
2355 West Chandler Blvd.
Chandler, AZ 85224-6199
Tel: 480-792-7200
Fax: 480-792-7277
Technical Support:
http://www.microchip.com/support
Web Address:
www.microchip.com

Atlanta
Duluth, GA
Tel: 678-957-9614
Fax: 678-957-1455

Austin, TX
Tel: 512-257-3370

Boston
Westborough, MA
Tel: 774-760-0087
Fax: 774-760-0088

Chicago
Itasca, IL
Tel: 630-285-0071
Fax: 630-285-0075

Dallas
Addison, TX
Tel: 972-818-7423
Fax: 972-818-2924

Detroit
Novi, MI
Tel: 248-848-4000

Houston, TX
Tel: 281-894-5983

Indianapolis
Noblesville, IN
Tel: 317-773-8323
Fax: 317-773-5453
Tel: 317-536-2380

Los Angeles
Mission Viejo, CA
Tel: 949-462-9523
Fax: 949-462-9608
Tel: 951-273-7800

Raleigh, NC
Tel: 919-844-7510

New York, NY
Tel: 631-435-6000

San Jose, CA
Tel: 408-735-9110
Tel: 408-436-4270

Canada - Toronto
Tel: 905-695-1980
Fax: 905-695-2078

ASIA/PACIFIC

Australia - Sydney
Tel: 61-2-9868-6733

China - Beijing
Tel: 86-10-8569-7000

China - Chengdu
Tel: 86-28-8665-5511

China - Chongqing
Tel: 86-23-8980-9588

China - Dongguan
Tel: 86-769-8702-9880

China - Guangzhou
Tel: 86-20-8755-8029

China - Hangzhou
Tel: 86-571-8792-8115

China - Hong Kong SAR
Tel: 852-2943-5100

China - Nanjing
Tel: 86-25-8473-2460

China - Qingdao
Tel: 86-532-8502-7355

China - Shanghai
Tel: 86-21-3326-8000

China - Shenyang
Tel: 86-24-2334-2829

China - Shenzhen
Tel: 86-755-8864-2200

China - Suzhou
Tel: 86-186-6233-1526

China - Wuhan
Tel: 86-27-5980-5300

China - Xian
Tel: 86-29-8833-7252

China - Xiamen
Tel: 86-592-2388138

China - Zhuhai
Tel: 86-756-3210040

ASIA/PACIFIC

India - Bangalore
Tel: 91-80-3090-4444

India - New Delhi
Tel: 91-11-4160-8631

India - Pune
Tel: 91-20-4121-0141

Japan - Osaka
Tel: 81-6-6152-7160

Japan - Tokyo
Tel: 81-3-6880- 3770

Korea - Daegu
Tel: 82-53-744-4301

Korea - Seoul
Tel: 82-2-554-7200

Malaysia - Kuala Lumpur
Tel: 60-3-7651-7906

Malaysia - Penang
Tel: 60-4-227-8870

Philippines - Manila
Tel: 63-2-634-9065

Singapore
Tel: 65-6334-8870

Taiwan - Hsin Chu
Tel: 886-3-577-8366

Taiwan - Kaohsiung
Tel: 886-7-213-7830

Taiwan - Taipei
Tel: 886-2-2508-8600

Thailand - Bangkok
Tel: 66-2-694-1351

Vietnam - Ho Chi Minh
Tel: 84-28-5448-2100

EUROPE

Austria - Wels
Tel: 43-7242-2244-39
Fax: 43-7242-2244-393

Denmark - Copenhagen
Tel: 45-4450-2828
Fax: 45-4485-2829

Finland - Espoo
Tel: 358-9-4520-820

France - Paris
Tel: 33-1-69-53-63-20
Fax: 33-1-69-30-90-79

Germany - Garching
Tel: 49-8931-9700

Germany - Haan
Tel: 49-2129-3766400

Germany - Heilbronn
Tel: 49-7131-72400

Germany - Karlsruhe
Tel: 49-721-625370

Germany - Munich
Tel: 49-89-627-144-0
Fax: 49-89-627-144-44

Germany - Rosenheim
Tel: 49-8031-354-560

Israel - Ra'anana
Tel: 972-9-744-7705

Italy - Milan
Tel: 39-0331-742611
Fax: 39-0331-466781

Italy - Padova
Tel: 39-049-7625286

Netherlands - Drunen
Tel: 31-416-690399
Fax: 31-416-690340

Norway - Trondheim
Tel: 47-7288-4388

Poland - Warsaw
Tel: 48-22-3325737

Romania - Bucharest
Tel: 40-21-407-87-50

Spain - Madrid
Tel: 34-91-708-08-90
Fax: 34-91-708-08-91

Sweden - Gothenberg
Tel: 46-31-704-60-40

Sweden - Stockholm
Tel: 46-8-5090-4654

UK - Wokingham
Tel: 44-118-921-5800
Fax: 44-118-921-5820

© 2017-2019 Microchip Technology Inc.