RoHS

TYPE-C/M TO HDMI/M CABLE Space gray aiuminum shell(4KX2K@60Hz) Black round wire

REV.	DESCRIPTION/REASON	DATE
01	RELEASE FOR PRODUCTION	

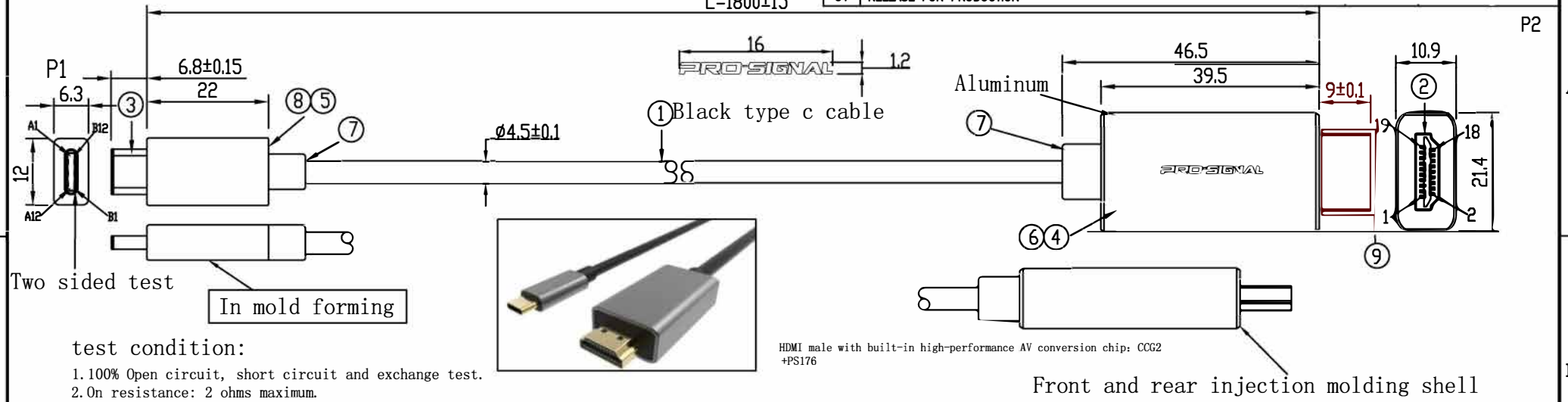

HDMI male with built-in high-performance AV conversion chip: CCG2 +PS176

Front and rear injection molding shell

test condition:

1. 100% Open circuit, short circuit and exchange test.
2. On resistance: 2 ohms maximum.
3. Insulation impedance:10 megohm minimum /dc300v/10ms(wire end)
4. 100%Insulation impedance:10 megohm minimum/dc300v/10ms(wire end).
   To test high-definition TV with Apple's laptop, the resolution should reach3840X2160@60Hz

matters needing attention:

1. After the wire rod end is sent out by the warehouse, pay attention to the appearance self inspecti.
2. Please refer to operation instruction for detailed operation mode
3. The shell at both ends shall not be scratched, scratched, etc.
4. The baffle plates at both ends shall be assembled tightly without obvious gap.
5. The molding part shall not be filled with glue, lack of glue and dirty.
6. The dimension of the finished product must be .
fully inspected in strict accordance with the drawing
7. Please refer to the detailed operation instruction
for more precautions

Contact list

P1(USB/TYPE C)	colour	P2(HDMI-PCBA)
GND	GND	GND
A3	BLUE	A3
A2	WHITE	A2
GND	GND	GND
B10	GREEN	B10
B11	WHITE	B11
GND	GND	GND
B3	RED	B3
B2	WHITE	B2
GND	GND	GND
A10	BROWN	A10
A11	WHITE	A11
A8	GRAY	A8
B5	YELLOW	B5
A7	GREEN	A7
A6	WHITE	A6
B8	PURPLE	B8
A5	ORANGE	A5
PWR	RED	PWR
IRONCLAD	KNIT	IRONCLAD

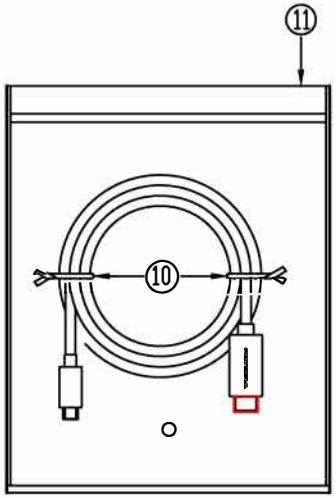

White composite bag

Item	Name	PART No.	Description	Q'TY	UNIT	Remark
11	PACK		Label the outer box of customer supplied package (package box + instruction + frosted bag)	1	SET	
10	TIE		Black single side PE Magic Band od = 0.45mm	2*80	mm	
9	LID		PE HDMI male dust cover	1	PCS	
8	PE		PE low density natural color transparent molding inner mold	6	9	
7	PVC		PVC plug rubber 45p black	12	9	
6	PCBA		HDMI/M PCBA:BH-	1	PCS	
5	SHELL		Type-C arc-shaped small aluminum shell space grey L = 22mm in mold	1	PCS	
4	SHELL		Rectangular aluminum shell front and rear high gloss space gray assembly countersunk head Gong slot L = 39.5mm	1	PCS	
3	CONN		Type-C 3.1 pin pin pin gold plating black rubber core iron shell gold plating	1	PCS	
2	CONN		HDMI plywood type male head black rubber core, pin pin pin is phosphor copper plated with gold, and iron shell is plated with gold	1	PCS	
1	WIRE		(1P*32#+D+AL+ML) *4+1P*32#+4C*32#+1C*22#+D+AL+B OD:4.5mm Black TPE coverlet	1800	mm	

PART NAME	TYPE C TO HDMI/M OD:4.5 Black line + space gray aluminum shell L = 1800mm	DRAWN	REV. A	DATE OCT/30/2019
FILE NAME	DWG			

UNIT: mm

UNSPECIFIED TOLERANCE
X.XX=±0.10
∠X.X=±0.5°

PROJECTION

A4

Form No.