Axial fans

version 07

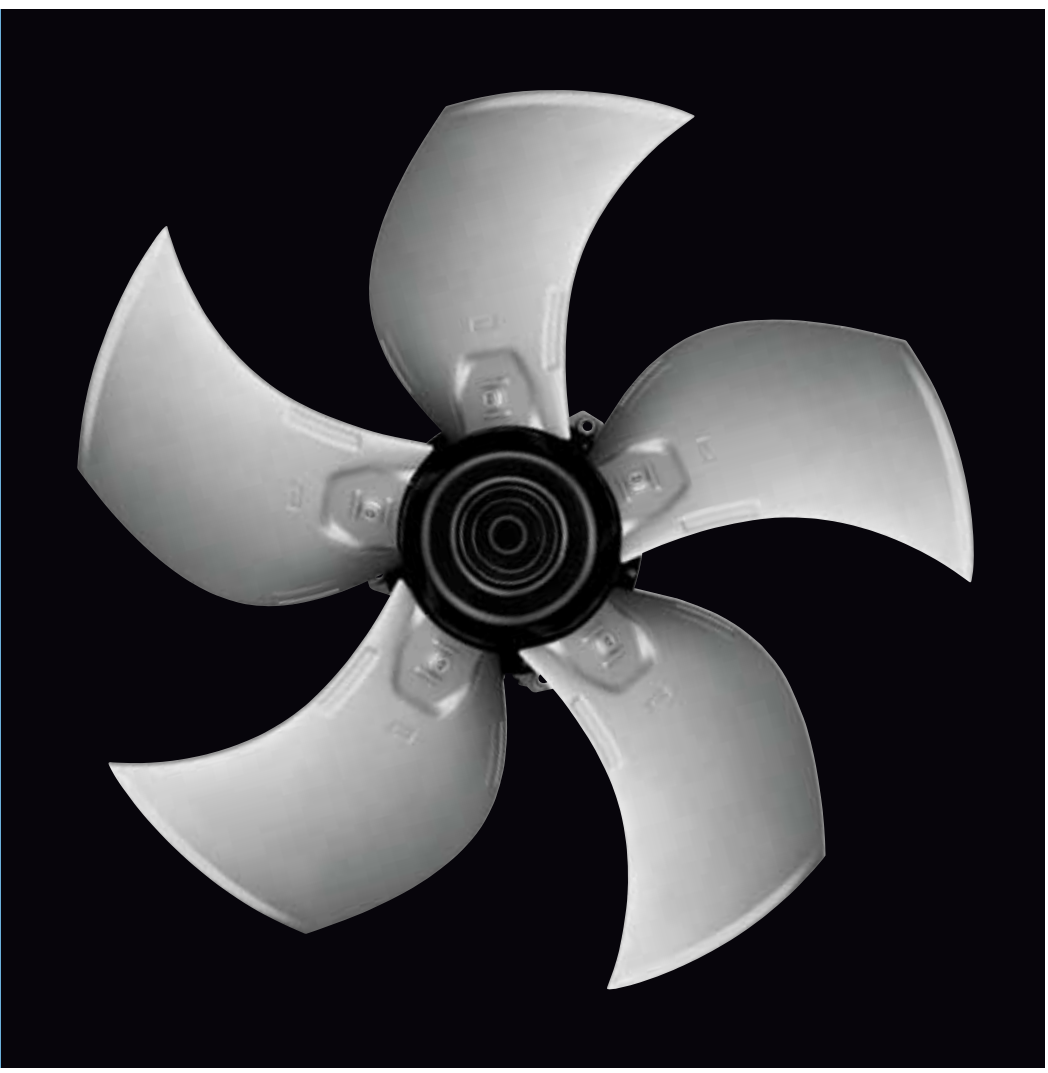

The engineer's choice

ebmpapst

Axial fans

ebm-papst's axial fans prove their reputation as space-saving wonders by moving air for hot or cold air exchange in a wide variety of devices and systems. Their outstanding features are their small installation depth, low noise level and exceptional efficiency, and are particularly well suited for air flow through heat exchangers.
Furthermore, in the EC version, they become intelligent "energy-saving wonders" for an extremely wide range of applications, primarily in ventilation, air-conditioning and refrigeration technology and the automotive industry.

One principle, countless options
The axial fan, the function of which is similar to a propeller, moves the air axially, parallel to the revolving motor shaft. The ebm-papst external rotor motor is integrated directly into the axial impeller, forming a compact axial fan unit. They are usually installed with wall rings in short or long nozzles.
The extensive ebm-papst product range offers the right solution for each requirement and is classified for a wide variety of applications:
– S series with sickle-shaped blades for high air flow at medium pressure
– K series with especially low noise level – ideally suited for refrigeration plant applications
– A series for high-pressure applications

Design according to requirements
Energy efficiency, controllability and low-noise performance – and all this together with external rotor motors in AC and EC technology: ebm-papst axial fans are optimally matched to customer requirements.
The EC technology (12 VDC to 110 VDC or line-voltage-powered 100 VAC to 480 VAC) with integrated or external electronics enables precision open and closed-loop control with very high efficiency. The following standard features are available:
tach output, error message, linear or PWM input, temperature or flow rate-dependent control systems or bus-connectable interface.

ebmpapst is a registered trademark of ebm-papst Mulfingen GmbH & Co. KG

Table of content

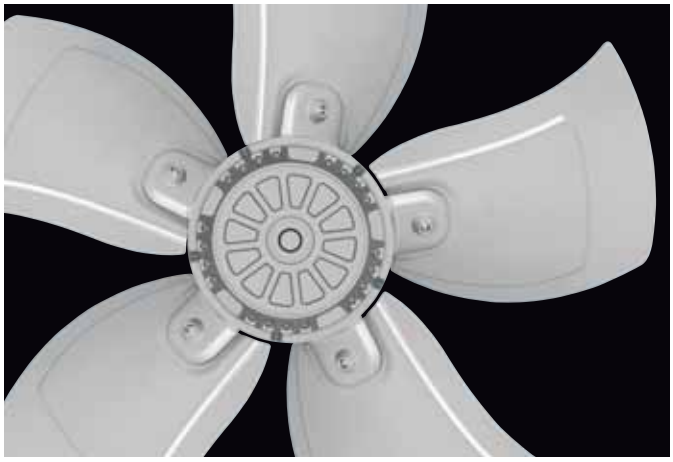

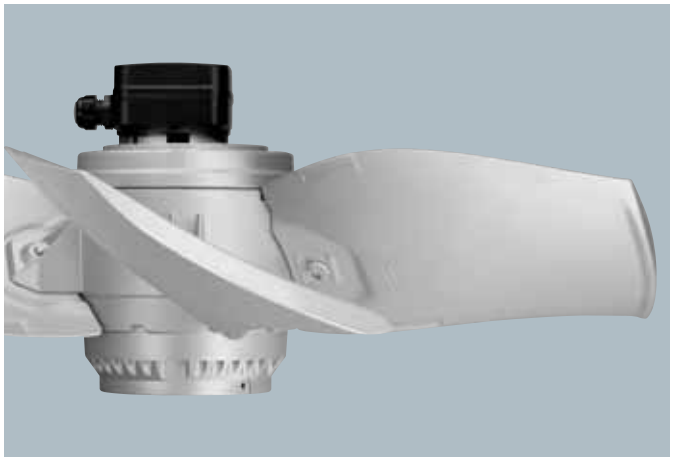

General information 4
- Company profile: ebm-papst
- Our key to success
- How to use this catalogue
- How to find your ebm-papst product
- How to order your ebm-papst product

AC axial fans, AC diagonal fans 13

AC axial fans, S series 23

AC axial fans, K series 131

AC axial fans, A series 157

EC axial fans, EC diagonal fans 179

EC axial fans, S series 185

Square shaded-pole motors (Q-motor) 301

Energy-saving motors (ESM) 315

EC-SYSTEMS 329
- Options
- Switch power supplies
- External commutation electronics for rail technology
- Temperature sensor / control module
- Pressure control / selection module for 3 speeds
- Interface converter / RS485 repeater
- RS485 terminal box / hand-held control terminal
- Speed setting
- LISA control software / fan control software
- HMS controller

Accessories 361
- Guard grilles, streamers
- Wall rings
- Connection leads
- Accessories for Q-motors and ESM
- Terminal boxes, capacitors
- Speed setting
- Motor protection switch
- Star-delta switch / repair switch

Technology 391
- Technical parameters & scope
- Impellers
- Motors
- Control technology

Distributors, agencies and subsidiaries 430

Company profile: ebm-papst

The entire scope of ventilation and drive technology: this is the world of ebm-papst. More than 9,800 people – in Germany and throughout the world – develop, produce and sell our motors and fans. Our global presence and our unique range of products based on a quality standard that surpasses every other have made us what we are: world market leader in motors and fans. Expertly knowing what our customers need and incessantly striving to arrive at the perfect application solution for a wide variety of different industries is what determines our daily work. Those who know us know the high standards we apply to our work and know our creed: to be as close to our customers as possible and to simply be the best in terms of innovation and reliability.

Our headquarters in Mulfingen

Left:
Our location in St. Georgen
Right:
Our location in Landshut

Our history – Our drive

Rooted in ebm, PAPST and mvl, the three leading innovators in the development and production of motors and fans, ebm-papst has established itself as the world market leader. Now as ever, our legendary inventive spirit shines through in products that set standards in many segments of industry worldwide. We are proud to say that despite difficult competition, our performance has always been exemplary and outstanding – in business, in our personal relationship with our customers, and of course with respect to technology and engineering. For decades, we have contributed to the world of air technology and drive engineering with small revolutions and large milestones.
To maintain this advantage in skills and knowledge to get maximum quality and thus the highest degree of customer satisfaction, our employees around the world put their passion and dedication to work for you.

Passionately involved in R&D

Our catalogues just list the results of our incessant efforts in R&D: products of highest quality and reliability. After all, it is our passion to constantly try something new and improve what we have. In doing so, we take advantage of the latest development methods and state-of-the-art technology and invest quite heavily in R&D facilities. Best of all, though, we rely on excellently trained and skilled engineers and technicians to be at your service in R&D and Sales & Distribution.

Producing and safeguarding high-quality products and services

This is our promise without any compromise. Whether produced in one of our five factories in Germany or one of our eleven international production sites, our products always have the same high level of quality. This quality control is something you can definitely rely on! And this across all levels of production and throughout all processes: consulting customers, development, material selection through to picking certified, choice suppliers and on to the production of parts and final delivery. On top of this, our products have to pass the most rigourous tests under all realistic operating conditions: continuous stress test, salt spray test, vibration test, or precision noise measuring, just to mention a few. And the product gets clearance for serial production only after all the desired characteristics have been determined to be just right.
Environmental care is another priority with ebm-papst. This is why we have developed our product line in EC technology, which makes for very low power consumption. Due to our manufacturing philosophy, there is absolute focus on environmental care in production, recycling, waste and waste water disposal.

Global Domestic

In order to be specialist for customised solutions throughout the world, you need strong partners. Global Domestic – i.e. being present all over the world and being a national company in each individual country – is how we have established ourselves in all important markets on this globe with our successful subsidiaries. And so you will always find ebm-papst close to home, speaking your language, and knowing the demands of your markets. Besides, our worldwide production alliance serves as a basis for competitive pricing. Our global services and logistic outlets, i.e. IT networking, safeguard short reaction times and just-in-time delivery.

All our efforts are documented in a comprehensive quality management system, both for products and services. Being certified as complying with the tough requirements of the international standards DIN EN ISO 9001, ISO/TS 16949-2 and of standard DIN EN ISO 14001 is just one seal of approval we have received for our unceasing efforts to provide only the best quality products and services.

Our key to success

Our innovations and technologies keep on turning into new industrial standards. This competitive capability can only be maintained by seeing ventilation as a whole: the interrelationship between, and thus the system of, motor engineering, aerodynamics, and electronics. These are our three core competencies, imminently connected and linked in each of our products. And so we handle air intelligently and quietly and continue to set new standards in drive technology. Our system solutions form the main part of our product range by now. And they will be our main key to success.

Production

Winding machine

Motor engineering, aerodynamics, electronics
Our drive is well known and famous with specialists: our external-rotor motor, which has made us world market leader – quietly, yet powerfully. Being versatile as to integration, it is ideally suited to the most diverse applications. Based on this principle, we here at ebm-papst have developed the widest range of fans and motor types in the world. And for hot or aggressive blower mediums, the internal-rotor motor is the perfect complement.

Still, in drive engineering, certain applications simply require the internal-rotor motor principle, and they are then realised with our motors specifically developed for such cases. Take, for instance, the steering support motor in the automotive field developed as innovation in active steering.

Be it axial or centrifugal fans, centrifugal blowers, compact fans or tangential blowers: we always design fan blades, impeller blades and ducted housings with the specific application in mind. We strive to minimise noise and to optimise efficiency. This is the challenge that we have taken up and which we meet – working away powerfully and quietly.

Finally, intelligence will become the decisive factor on all markets in future. After all, only in connection with electronics can drive and air flow – as a system solution – have an optimal effect in a product or application. Interfaces are avoided, and thus potential faults and failures.

Setting new standards with EC technology
Wherever intelligent air handling is required, where energy consumption needs to be reduced and performance has to be maximised, there our EC motors are your reliable answer. They do not waste financial or natural resources. Instead, they boost high efficiency, continuous controllability via analogue or digital inputs, long and maintenance-free service life, and robustness.

Left: Endurance test room
Centre: Shaker
Right: Measurement station

Top: Betz manometer
Left: Precision noise measurement lab

Without any problems, the ebm-papst EC technology allows you to realise networked, bus-linked appliances, to integrate simple or complex controls at low cost and to also realise time and again new, customised and complete solutions. Here, ebm-papst excels as competent development partner, with our experience of more than 25 years and our excellent know-how in R & D and production also being well documented in a few hundred national and international patents. And there is also our ability to listen intently, to pay good attention to our customers and their demands – in order to come up with new and pioneering ideas, such as:

- EC fan units for clean room technology. As the electronics are integrated and the unit is wired up completely and ready to plug in, there is no need for our customers to waste time and money on laborious wiring work.
- Sensitive EC sensor fans for the automotive industry providing optimal selection of the air-conditioning unit in the car and, combined with booster blowers, individual air-conditioning of each and every passenger seat.
- EC gas blowers with commutation and control electronics including a processor. They are developed in such a way as to make the blower premix the required amount of air with the gas. Aerodynamics with these blowers are adjusted in such a way as to make these blowers ideal for use in very limited space at high back pressure.

How to use this catalogue

The ebm-papst catalogue combines a technical and a product-specific section.

Technical section: General information on how to select and find ebm-papst products for your specific application is found in the chapters "Selection" (p. 10) and "Technical parameters" (p. 392).

In case you require technical background information on ebm-papst product groups, simply turn to the chapters "Impellers" (p. 396), "Motors" (p.410) and "Control technology" (p. 414).

Product-specific section: The product-specific section is organised according to product diameters, lines, materials and/or design principles.

Headline

The headline indicates which technology (AC or EC), which design (centrifugal, axial, etc.), and which line (e.g. S-Range) the product belongs to. Impeller diameter or other features are also indicated.

Part designation / Type

R	2	E	190	-A	0	26	-05
1	2	3	4		5	6	7

This key designates and identifies all ebm-papst products and serves as part number:

1) Type
   - A - axial fan
   - S - axial fan with guard grille
   - W - axial fan with wall ring
   - V - axial combination
   - R - centrifugal fan, single inlet
   - G - centrifugal blower, single inlet (with scroll housing)
   - B - centrifugal fan, dual inlet
   - D - centrifugal blower, dual inlet (with scroll housing)
   - K - centrifugal combination
   - M - motor
   - P - pumps
2) Number of poles (AC) / number of cores (EC)
   2-, 4-, 6-, 8- and 12-pole (Z = 12) / 1- and 3-core
3) Motor type
   - D - 3-phase motor
   - E - single-phase motor with operating capacitor
   - G - EC motor
   - S - shaded-pole motor
   - Q - square shaded-pole motors
4) Impeller diameter in mm
5) Key for mechanical design
6) Key for electrical design
7) Key for mechanical variants

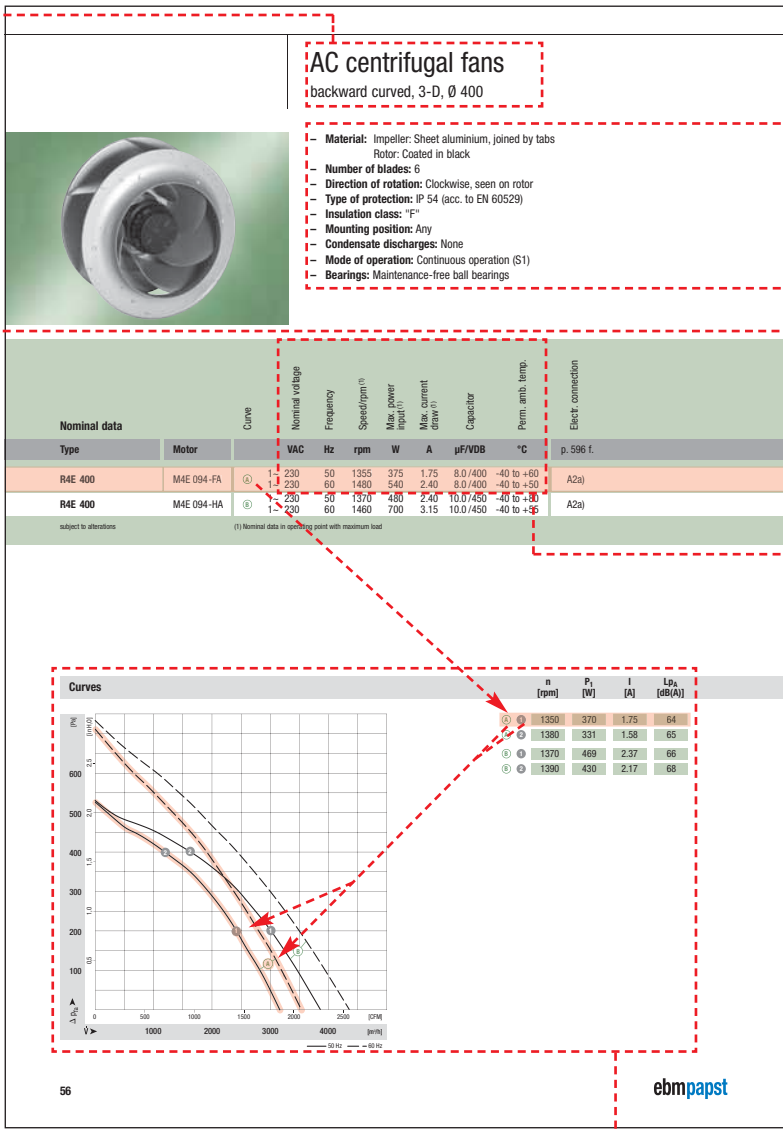

AC centrifugal fans

backward curved, 3-D, Ø 400

- **Material:** Impeller: Sheet aluminium, joined by tabs
  Rotor: Coated in black
- **Number of blades:** 6
- **Direction of rotation:** Clockwise, seen on rotor
- **Type of protection:** IP 54 (acc. to EN 60529)
- **Insulation class:** "F"
- **Mounting position:** Any
- **Condensate discharges:** None
- **Mode of operation:** Continuous operation (S1)
- **Bearings:** Maintenance-free ball bearings

Nominal data		Curve	Nominal voltage	Frequency	Speed/rpm (1)	Max. power input (1)	Max. current draw (1)	Capacitor	Perm. amb. temp.	Electr. connection
Type	Motor		VAC	Hz	rpm	W	A	µF/VDB	°C	p. 596 f.
R4E 400	M4E 094-FA	Ⓐ	1~ 230	50	1355	375	1.75	8.0 / 400	-40 to +60	A2a)
			1~ 230	60	1480	540	2.40	8.0 / 400	-40 to +50	
R4E 400	M4E 094-HA	Ⓑ	1~ 230	50	1370	480	2.40	10.0 / 450	-40 to +80	A2a)
			1~ 230	60	1460	700	3.15	10.0 / 450	-40 to +55	

subject to alterations

(1) Nominal data in operating point with maximum load

Curves

		n [rpm]	P_1 [W]	I [A]	LP_A [dB(A)]
Ⓐ	1	1350	370	1.75	64
Ⓐ	2	1380	331	1.58	65
Ⓑ	1	1370	469	2.37	66
Ⓑ	2	1390	430	2.17	68

56

ebmpapst

What a product page is made up of (reduced scale - 50%)

ebmpapst

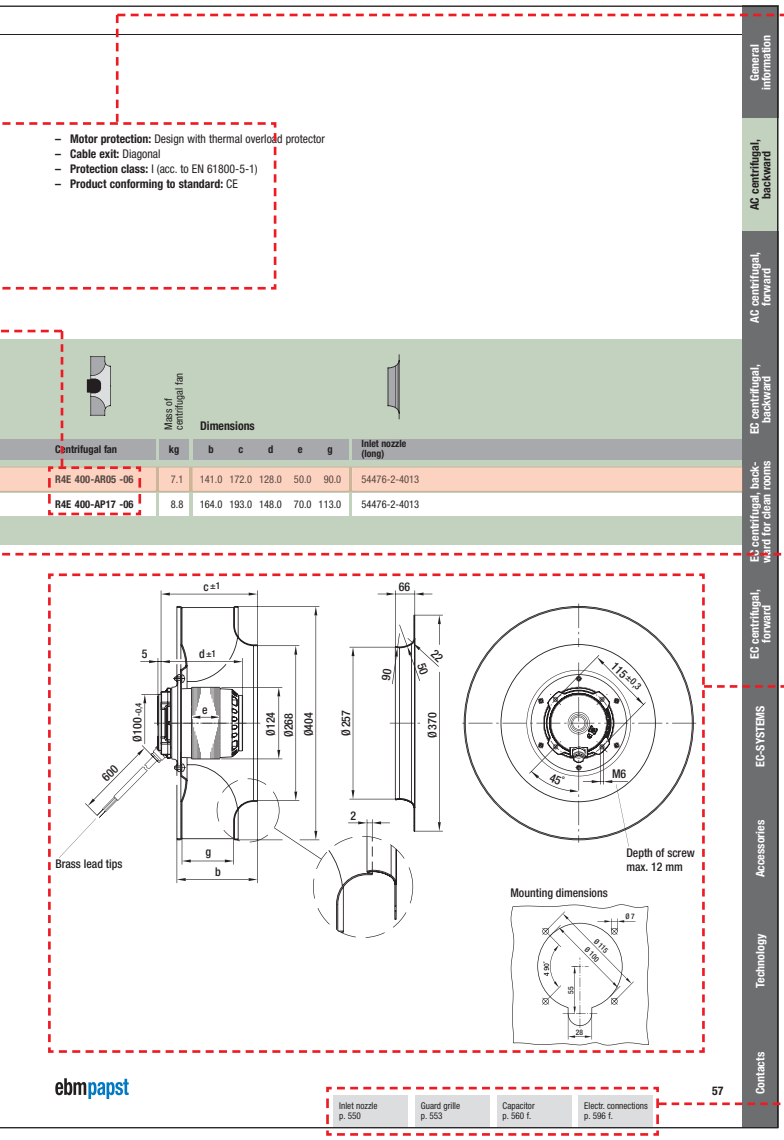

- **Motor protection:** Design with thermal overload protector
- **Cable exit:** Diagonal
- **Protection class:** I (acc. to EN 61800-5-1)
- **Product conforming to standard:** CE

Centrifugal fan	Mass of centrifugal fan kg	Dimensions b	c	d	e	g	Inlet nozzle (long)
R4E 400-AR05 -06	7.1	141.0	172.0	128.0	50.0	90.0	54476-2-4013
R4E 400-AP17 -06	8.8	164.0	193.0	148.0	70.0	113.0	54476-2-4013

Product description

Depending on the product, information is provided here on the following: material, number of blades, direction of air flow, direction of rotation, system of protection, insulation class, mounting position, condensate discharge holes, mode of operation, design, bearing, technical equipment, EMC, leakage current, motor protection, electrical connection, cable exit, protection class, capacitor, product conforming to standards, approvals and options.

Nominal data

AC products (up to motor size 074) and EC products (DC-fed):

Free-blowing or at minimal backpressure

AC products (from motor size 094) and EC products (AC-fed):

In operating point at maximum load

Graphic rendition of products

All drawings represent the design principle and are not to scale. Dimensions are either given in the product drawing or, with varying dimensions, in the table of dimensions given above the drawing.

Indication of relevant accessories and additional information

The pages indicated at the bottom refer to the accessories, e.g. inlet nozzles, guard grilles, wall rings, etc. for this particular product, as well as additional information (e. g. the connection diagram).

Curves and operating points

The diagram gives air performance curves pertaining to the product. Refer to the operating point table to the right for information on speed, power consumption, current draw, sound level or sound pressure level and overall efficiency of the impeller.

How to select your ebm-papst product

Solutions for ventilation offered by ebm-papst

In the field of ventilation, ebm-papst offers the perfect solution for a vast number of applications. Depending on motor, impeller and control technology, there is almost no limit to the number of possible combinations, thus making sure you can find the best solution for your application.

Criteria for selection

When selecting a fan for a specific application, these parameters play an important role:

- Air flow with given back pressure
- Voltage supply, divided into DC and AC voltage (1~, 3~)
- Noise generation
- Efficiency
- Available mounting space

Selecting a fan

The following diagram shows the range of characteristic curves for the most important fan designs and serves as a helpful tool in preselecting a design on the basis of air flow and back pressure.

Characteristic curves of the various designs

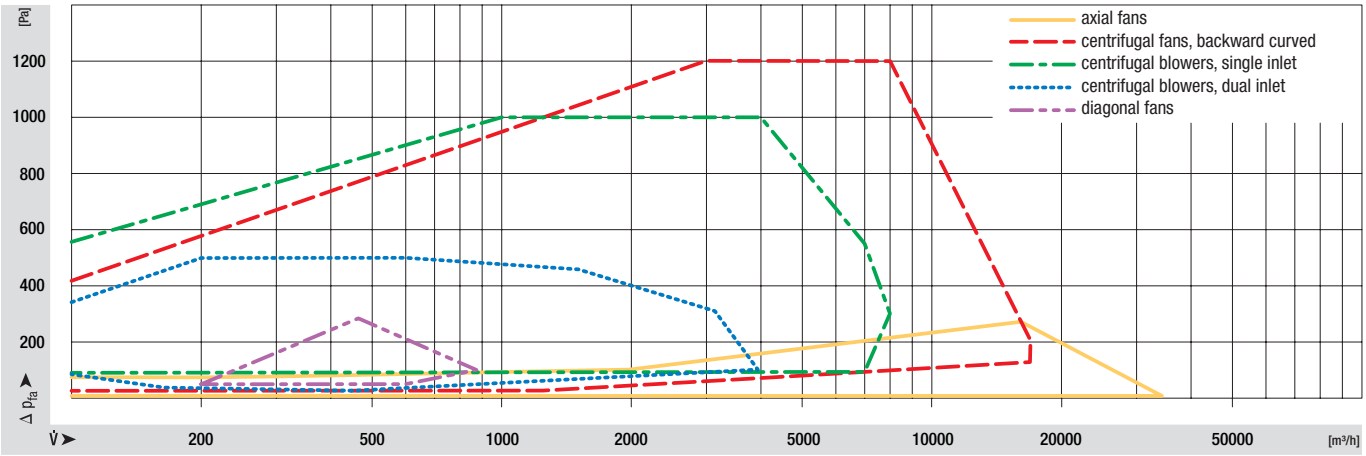

ebmpapst

How to order your ebm-papst product

Have you found the suitable ebm-papst product and would like to order it now?
In this case, simply contact your nearest ebm-papst sales office by E-mail, fax or phone.

Don't know exactly which ebm-papst product you need to order?
In this case, simply contact your nearest ebm-papst sales office by E-mail, fax or phone. Our specialists in ventilation and drive technology are always there to help you find the best solution for your specific application.

Using the questions provided in the checklist here as a guideline, you can make sure your ebm-papst contact has all the necessary information to handle your enquiry as efficiently and quickly as possible.

How your ebm-papst product is delivered
In our order confirmation, you will find information on when, how and where to the delivery will be made.

We deliver:
- Ex works (excluding packaging)
- Via freight carrier (we also use postal services for shipments up to 30 kg)

All the other details such as packaging, freight, insurance and customs duty will be settled with your ebm-papst contact prior to the time we issue our order confirmation.

Is there anything else you need to know about your ebm-papst product?
In this case, simply contact your nearest ebm-papst sales office by E-mail, fax or phone. We have the answer to your problem and are always glad to be able to be of assistance.

Using the questions provided in the checklist here as a guideline, you can make sure your ebm-papst contact has all the necessary information to handle your enquiry as efficiently and quickly as possible.

Checklist

- Part designation / type
- Quantity needed
- Field of application
- Ambient conditions (humidity, temperature, climate)
- Impeller diameter
- Air flow
- Back pressure
- Voltage supply

For your nearest sales office, please turn to page 430.

AC axial fans, AC diagonal fans

AC axial fans	Ø 130 - Ø 250	14
AC diagonal fans	Ø 208	20

AC axial fans

Ø 130

- **Material:**
  Wall ring: Die-cast aluminium, coated in black
  Blades: Sheet steel, coated in black
  Rotor: Open, coated in black
- **Number of blades:** 7
- **Direction of air flow:** "V", exhaust over struts
- **Direction of rotation:** Counter-clockwise, seen on rotor
- **Type of protection:** IP 20
- **Insulation class:** "B"
- **Mounting position:** Any
- **Condensate discharges:** None
- **Mode of operation:**
  Continuous operation (S1)
- **Bearings:** Maintenance-free ball bearings
- **Motor protection:** TOP wired internally
- **Electrical connection:**
  Cable length 330 mm, beginning at wall ring
- **Protection class:** I
- **Product conforming to standards:**
  EN 60335-1, CE
- **Approvals:** VDE, UL, CSA, CCC, GOST

Nominal data		Curve	Nominal voltage	Frequency	Air flow	Speed/rpm	Power input	Current draw	Capacitor	Sound pressure level	Max. operative range	Perm. amb. temp.	Mass	Electr. connection
Type	**Motor**		**VAC**	**Hz**	**m³/h**	**rpm**	**W**	**A**	**µF/VDB**	**dB(A)**	**Pa**	**°C**	**kg**	p. 416 f.
W2S130-AA25 -01	M2S 052-CA	Ⓐ	1~ 115 1~ 115	50 60	325 380	2800 3250	41 38	— —	— —	49 53	80 120	-25 to +60 -25 to +80	1.1	B)
W2S130-AA03 -01	M2S 052-CA	Ⓐ	1~ 230 1~ 230	50 60	325 380	2800 3250	45 39	— —	— —	49 53	80 120	-25 to +50 -25 to +70	1.1	B)

subject to alterations

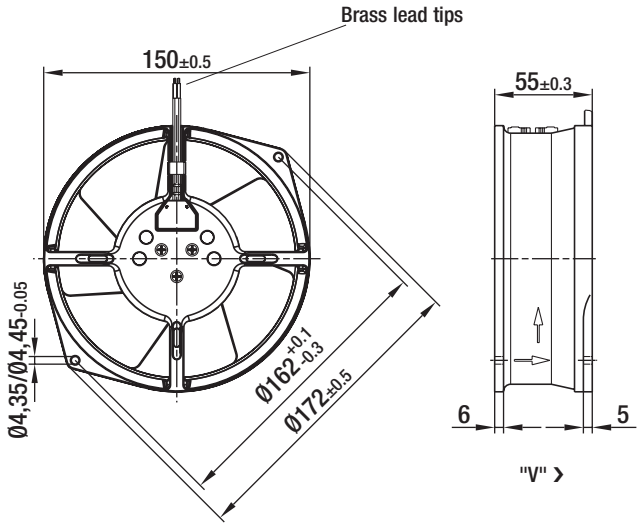

Curves

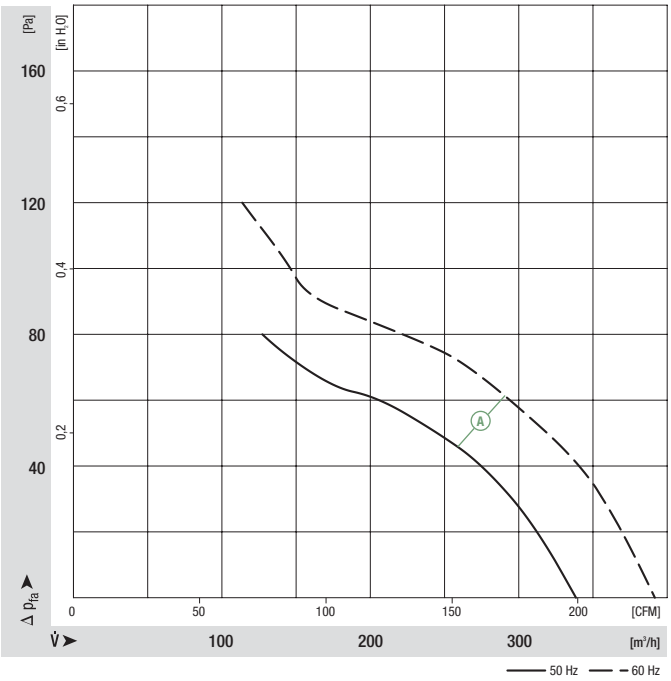

Guard grille p. 368
Electr. connections p. 416 f.

ebmpapst

AC axial fans

Ø 130

- **Material:**
  Wall ring: Die-cast aluminium, coated in black
  Blades: Sheet steel, coated in black
  Rotor: Open, coated in black
- **Number of blades:** 5
- **Direction of air flow:** "A", intake over struts
- **Direction of rotation:** Counter-clockwise, seen on rotor
- **Type of protection:** IP 20
- **Insulation class:** "B"
- **Mounting position:** Any
- **Condensate discharges:** None
- **Mode of operation:** Continuous operation (S1)
- **Bearings:** Maintenance-free ball bearings
- **Motor protection:** TOP wired internally
- **Electrical connection:** Cable length 330 mm, beginning at wall ring
- **Protection class:** I
- **Product conforming to standards:** EN 60335-1, CE
- **Approvals:** VDE, UL, CSA, CCC, GOST

Nominal data

Type	Motor	Curve	Nominal voltage VAC	Frequency Hz	Air flow m³/h	Speed/rpm rpm	Power input W	Current draw A	Capacitor µF/VDB	Sound pressure level dB(A)	Max. operative range Pa	Perm. amb. temp. °C	Mass kg	Electr. connection p. 416 f.
W2S 130-BM15-01	M2S 052-CA	B	1~ 115 1~ 115	50 60	380 425	2700 3050	47 46	— —	— —	60 62	— —	-25 to +50 -25 to +70	1.1	B)
W2S 130-BM03-01	M2S 052-CA	B	1~ 230 1~ 230	50 60	380 425	2700 3050	47 46	— —	— —	60 62	— —	-25 to +50 -25 to +70	1.1	B)

subject to alterations

Curves

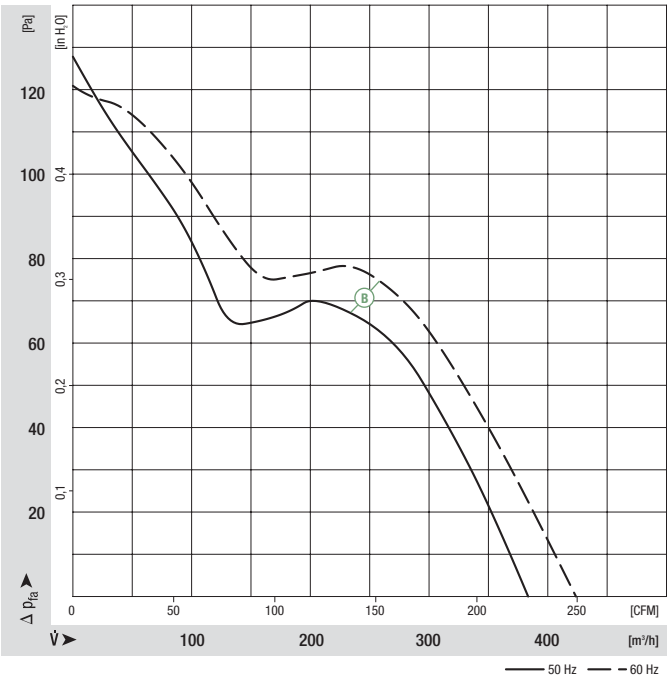

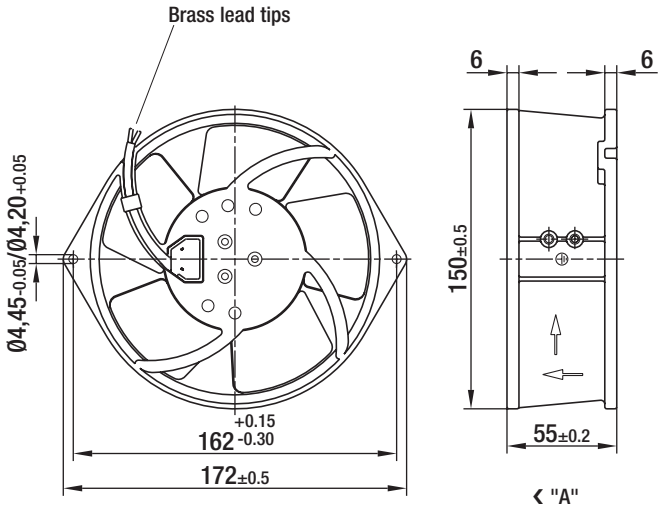

AC axial fans

Ø 142

- **Material:**
  Wall ring: Die-cast aluminium, coated in black
  Blades: Sheet steel, coated in black
  Rotor: Open, coated in black
- **Number of blades:** 7
- **Direction of air flow:** "V", exhaust over struts
- **Direction of rotation:** Counter-clockwise, seen on rotor
- **Type of protection:** IP 22
- **Insulation class:** "B"
- **Mounting position:** Any
- **Condensate discharges:** None
- **Mode of operation:** Continuous operation (S1)
- **Bearings:** Maintenance-free ball bearings
- **Motor protection:** TOP wired internally
- **Electrical connection:** Blade terminal 2.8 x 0.5 mm (operating capacitor connected)
- **Protection class:** I
- **Product conforming to standards:** EN 60335-1, CE
- **Approvals:** VDE, UL, CSA, CCC, GOST

Nominal data		Curve	Nominal voltage	Frequency	Air flow	Speed/rpm	Power input	Current draw	Capacitor	Sound pressure level	Max. operative range	Perm. amb. temp.	Mass
Type	**Motor**		**VAC**	**Hz**	**m³/h**	**rpm**	**W**	**A**	**µF/VDB**	**dB(A)**	**Pa**	**°C**	**kg**
W2E 142-BB05 -01	M2E 052-BA	A	1~ 115 1~ 115	50 60	330 390	2800 3300	25 24	— —	— —	52 57	— —	-25 to +55 -25 to +70	0.9
W2E 142-BB01 -01	M2E 052-BA	A	1~ 230 1~ 230	50 60	330 390	2800 3300	25 24	— —	— —	52 57	— —	-25 to +55 -25 to +70	0.9

subject to alterations

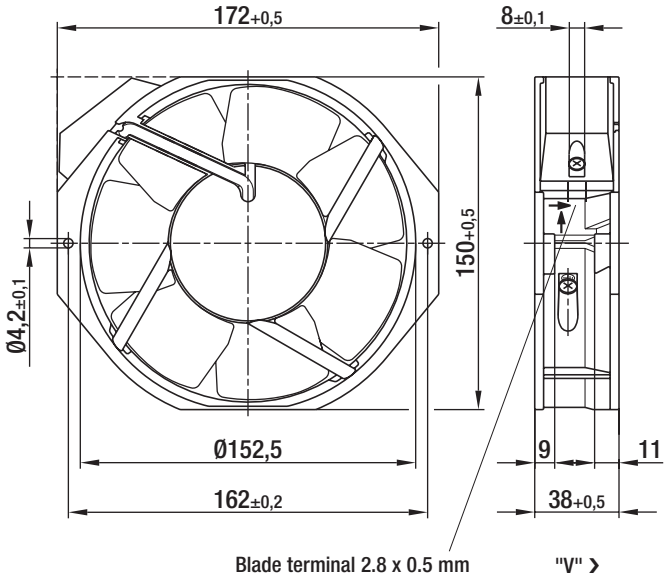

Curves

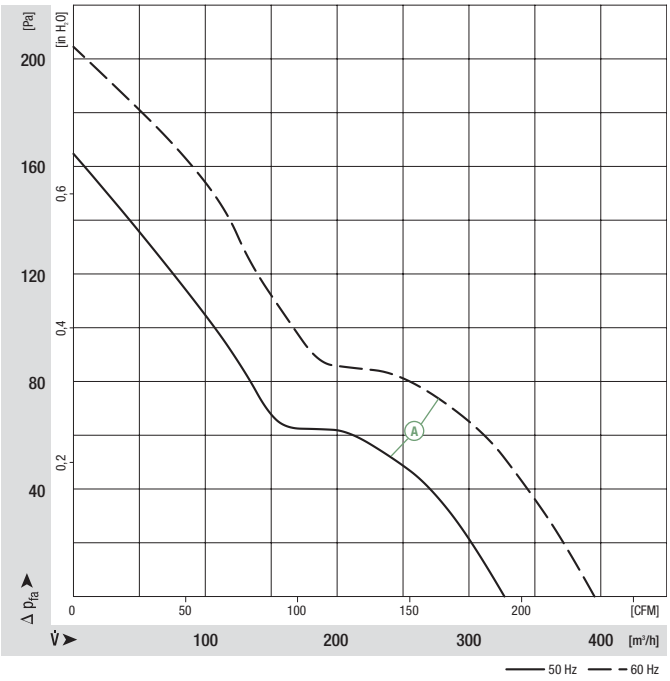

Guard grille p. 368 f.
Connection lead p. 374

ebmpapst

AC axial fans

Ø 143

- **Material:**
  Wall ring: Die-cast aluminium, coated in black
  Blades: Sheet steel, coated in black
  Rotor: Open, coated in black
- **Number of blades:** 5
- **Direction of air flow:** "V", exhaust over struts
- **Direction of rotation:** Counter-clockwise, seen on rotor
- **Type of protection:** IP 20
- **Insulation class:** "B"
- **Mounting position:** Any
- **Condensate discharges:** None
- **Mode of operation:** Continuous operation (S1)
- **Bearings:** Maintenance-free ball bearings
- **Motor protection:** TOP wired internally
- **Electrical connection:** Blade terminal 2.8 x 0.5 mm (operating capacitor connected)
- **Protection class:** I
- **Product conforming to standards:** EN 60335-1, CE
- **Approvals:** VDE, UL, CSA, CCC, GOST

Nominal data

Type	Motor	Curve	Nominal voltage VAC	Frequency Hz	Air flow m³/h	Speed/rpm rpm	Power input W	Current draw A	Capacitor µF/VDB	Sound pressure level dB(A)	Max. operative range Pa	Perm. amb. temp. °C	Mass kg
W2E143 -AA15 -01	M2E 052-BF	B	1~ 115 1~ 115	50 60	375 440	2800 3300	24 26	— —	— —	55 60	— —	-25 to +70 -25 to +70	1.0
W2E143 -AA09 -01	M2E 052-BF	B	1~ 230 1~ 230	50 60	375 440	2800 3300	24 26	— —	— —	55 60	— —	-25 to +70 -25 to +70	1.0

subject to alterations

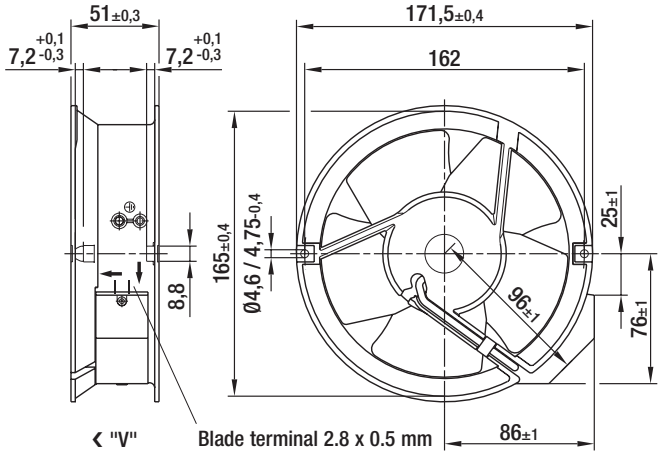

Curves

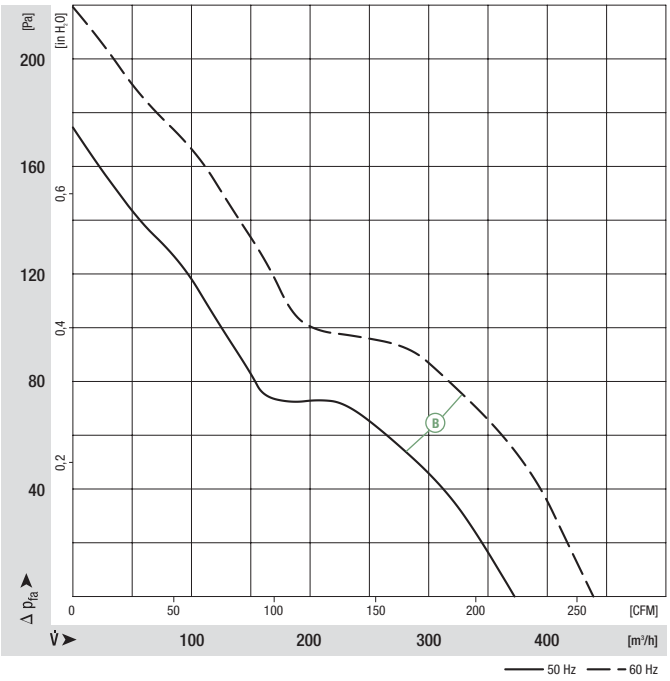

Guard grille p. 368 f.

Connection lead p. 374

AC axial fans

Ø 143

- **Material:**
  Wall ring: Die-cast aluminium, coated in black
  Blades: Sheet steel, coated in black
  Rotor: Open, coated in black
- **Number of blades:** 5
- **Direction of air flow:** "V", exhaust over struts
- **Direction of rotation:** Counter-clockwise, seen on rotor
- **Type of protection:** IP 20
- **Insulation class:** "B"
- **Mounting position:** Any
- **Condensate discharges:** None
- **Mode of operation:** Continuous operation (S1)
- **Bearings:** Maintenance-free ball bearings
- **Motor protection:** TOP wired internally
- **Electrical connection:** Blade terminal 2.8 x 0.5 mm (operating capacitor connected)
- **Protection class:** I
- **Product conforming to standards:** EN 60335-1, CE
- **Approvals:** VDE, UL, CSA, CCC, GOST

Nominal data		Curve	Nominal voltage	Frequency	Air flow	Speed/rpm	Power input	Current draw	Capacitor	Sound pressure level	Max. operative range	Perm. amb. temp.	Mass
Type	**Motor**		**VAC**	**Hz**	**m³/h**	**rpm**	**W**	**A**	**µF/VDB**	**dB(A)**	**Pa**	**°C**	**kg**
W2E 143-AB15 -01	M2E 052-BF	A	1~ 115 1~ 115	50 60	420 500	2800 3300	26 29	— —	— —	54 58	— —	-25 to +60 -25 to +75	1.0
W2E 143-AB09 -01	M2E 052-BF	A	1~ 230 1~ 230	50 60	420 500	2800 3300	26 29	— —	— —	54 58	— —	-25 to +60 -25 to +75	1.0

subject to alterations

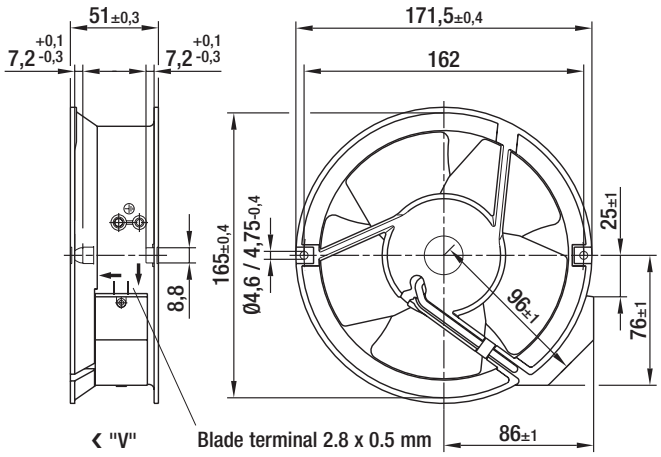

Curves

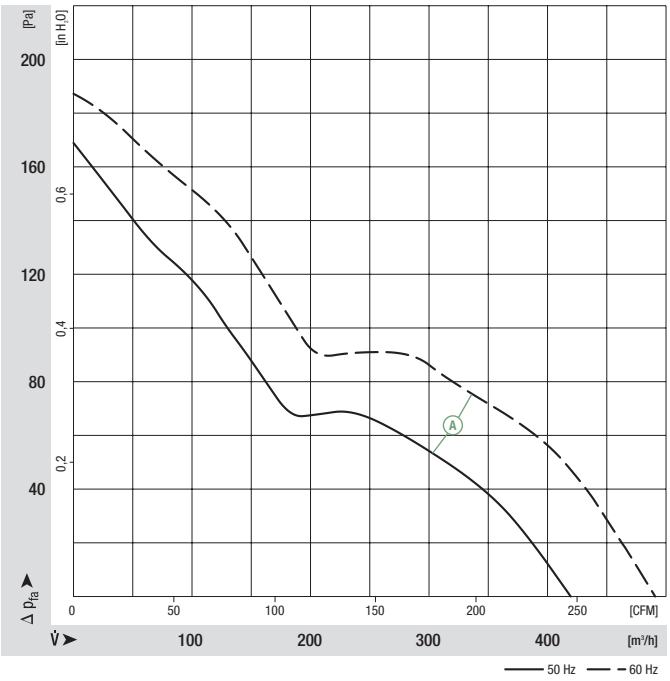

Guard grille p. 368 f.
Connection lead p. 374

ebmpapst

AC axial fans

Ø 200

- **Material:**
  Wall ring: Die-cast aluminium
  Blades: Sheet steel, coated in black
  Rotor: Coated in black
- **Number of blades:** 7
- **Direction of air flow:** "V", exhaust over struts
- **Direction of rotation:** Counter-clockwise, seen on rotor
- **Type of protection:** IP 44
- **Insulation class:** "B"
- **Mounting position:** Any
- **Condensate discharges:** None
- **Mode of operation:** Continuous operation (S1)
- **Bearings:** Maintenance-free ball bearings
- **Motor protection:** TOP wired internally
- **Electrical connection:** Terminal strips (operating capacitor connected)
- **Protection class:** I
- **Product conforming to standards:** EN 60335-1, CE
- **Approvals:** VDE, UL, CSA, CCC; Ⓑ also GOST

Nominal data

Type	Motor	Curve	Nominal voltage VAC	Frequency Hz	Air flow m³/h	Speed/rpm rpm	Power input W	Current draw A	Capacitor µF/VDB	Sound pressure level dB(A)	Max. operative range Pa	Perm. amb. temp. °C	Mass kg
W2E 200-HK86 -01	M2E 068-BF	Ⓑ	1~ 115	50	925	2550	64	0.58	5.0/220	59	100	-25 to +60	2.0
			1~ 115	60	1030	2800	80	0.70	5.0/220	61	120	-25 to +65	
W2E 200-HK38 -01	M2E 068-BF	Ⓑ	1~ 230	50	925	2550	64	0.29	1.5/400	59	100	-25 to +60	2.0
			1~ 230	60	1030	2800	80	0.35	1.5/400	61	120	-25 to +65	
W4S 200-HK04 -01	M4S 068-BF	Ⓒ	1~ 230	50	450	1370	30	0.21	—	40	50	-25 to +70	2.0
			1~ 230	60	525	1590	26	0.18	—	44	50	-25 to +80	

subject to alterations

Curves

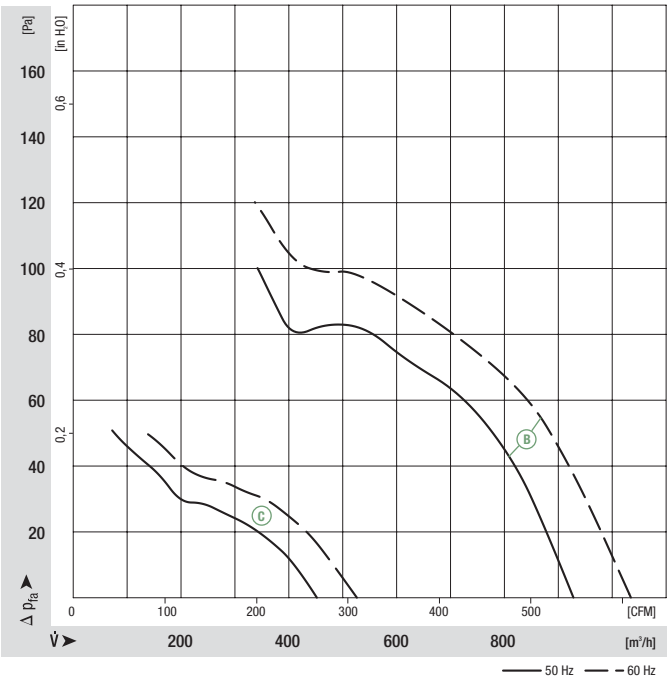

W2E 200-HK

(1) Protruding capacitor

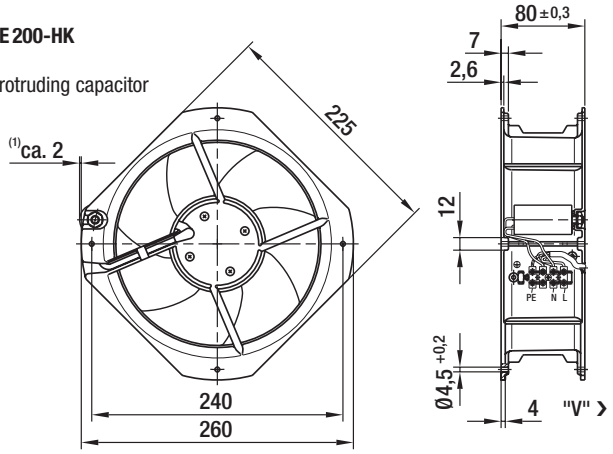

W4S 200-HK

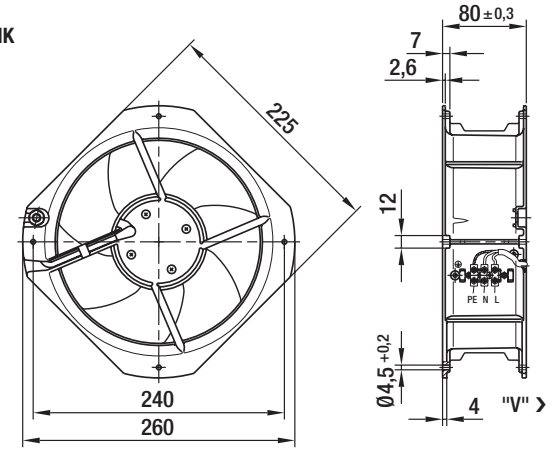

Guard grille p. 369

Capacitor p. 382 f.

AC diagonal fans

Ø 208

- **Material:**
  Wall ring: Die-cast aluminium
  Blades: Plastic PA
  Rotor: Coated in black
- **Number of blades:** 5
- **Direction of air flow:** "V", exhaust over struts
- **Direction of rotation:** Counter-clockwise, seen on rotor
- **Type of protection:** IP 44
- **Insulation class:** "F"
- **Mounting position:** Any
- **Condensate discharges:** None
- **Mode of operation:** Continuous operation (S1)
- **Bearings:** Maintenance-free ball bearings
- **Motor protection:** Ⓐ Without TOP, Ⓑ TOP wired internally
- **Electrical connection:** Terminal strips (operating capacitor connected)
- **Protection class:** I
- **Product conforming to standards:** EN 60335-1, Ⓑ also CE
- **Approvals:** VDE, CCC, GOST

Nominal data

Type	Motor	Curve	Nominal voltage VAC	Frequency Hz	Air flow m³/h	Speed/rpm rpm	Power input W	Current draw A	Capacitor µF/VDB	Sound pressure level dB(A)	Max. operative range Pa	Perm. amb. temp. °C	Mass kg
W2D208-BA02 -01	M2D 068-CF	Ⓐ	3~ 400 Y 3~ 400 Y	50 60	820 920	2740 3090	60 80	0.15 0.15	— —	67 70	135 165	-25 to +70 -25 to +70	2.8
W2E208-BA86 -01	M2E 068-CF	Ⓑ	1~ 115 1~ 115	50 60	815 925	2750 3100	67 87	0.70 0.78	6.0/220 6.0/220	68 70	135 165	-25 to +72 -25 to +72	2.8
W2E208-BA20 -01	M2E 068-CF	Ⓑ	1~ 230 1~ 230	50 60	815 925	2750 3100	67 87	0.33 0.39	1.5/450 1.5/450	68 70	135 165	-25 to +72 -25 to +72	2.8

subject to alterations

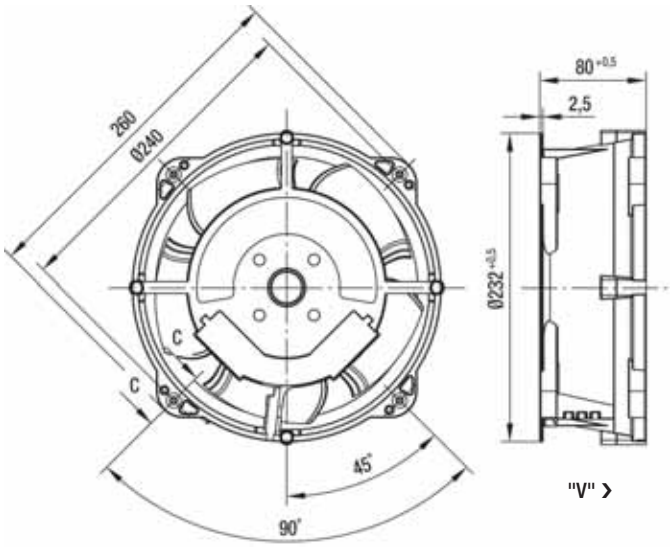

Section C-C

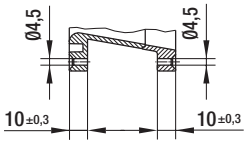

	n [rpm]	P_1 [W]	Lp_A [dB(A)]		n [rpm]	P_1 [W]	Lp_A [dB(A)]
Ⓐ ❶	3090	80	70	Ⓑ ❶	3100	87	70
Ⓐ ❷	2990	93	69	Ⓑ ❷	2990	100	70
Ⓐ ❸	2960	96	69	Ⓑ ❸	2960	102	69
Ⓐ ❹	2990	92	70	Ⓑ ❹	3020	97	70

Curves

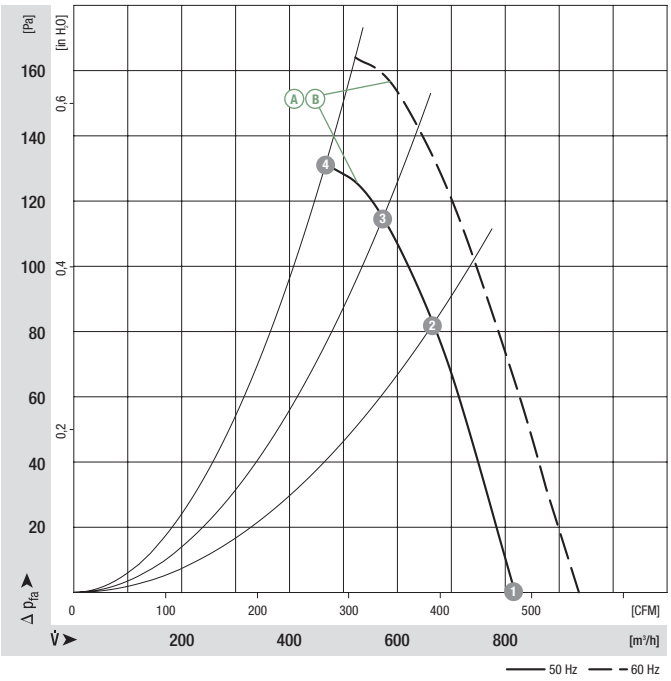

Guard grille p. 367
Capacitor p. 382 f.

ebmpapst

AC axial fans

Ø 250

- **Material:**
  Wall ring: Die-cast aluminium
  Blades: Sheet steel, coated in black
  Rotor: Coated in black
- **Number of blades:** 7
- **Direction of air flow:** "V", exhaust over struts
- **Direction of rotation:** Counter-clockwise, seen on rotor
- **Type of protection:** IP 44
- **Insulation class:** "F"
- **Mounting position:** Any
- **Condensate discharges:** None
- **Mode of operation:** Continuous operation (S1)
- **Bearings:** Maintenance-free ball bearings
- **Motor protection:** TOP wired internally
- **Electrical connection:** Terminal strips (operating capacitor connected)
- **Protection class:** I
- **Product conforming to standards:** EN 60335-1, CE
- **Approvals:** VDE, UL, CSA, CCC, GOST

Nominal data

Type	Motor	Curve	Nominal voltage VAC	Frequency Hz	Air flow m³/h	Speed/rpm rpm	Power input W	Current draw A	Capacitor µF/VDB	Sound pressure level dB(A)	Max. operative range Pa	Perm. amb. temp. °C	Mass kg
W2E 250-HL06 -01	M2E 068-CF	C	1~ 230	50	1865	2550	127	0.56	4.0 / 400	69	100	-25 to +60	2.0
			1~ 230	60	1970	2700	180	0.79	4.0 / 400	70	100	-25 to +45	

subject to alterations

Curves

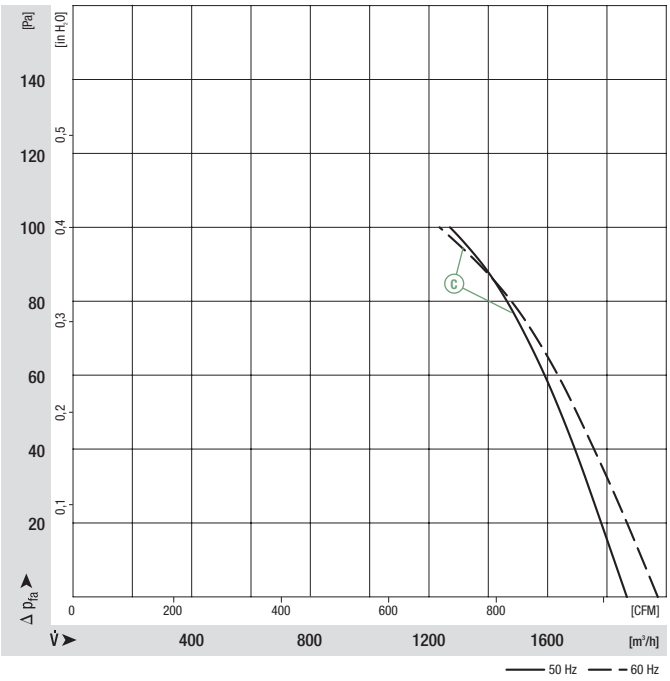

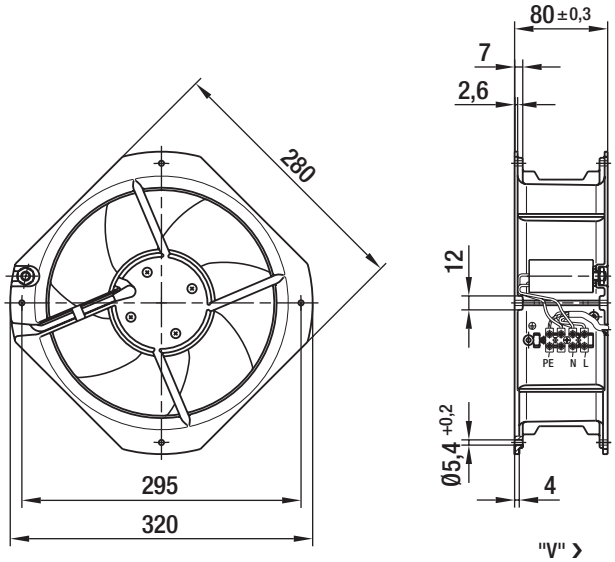

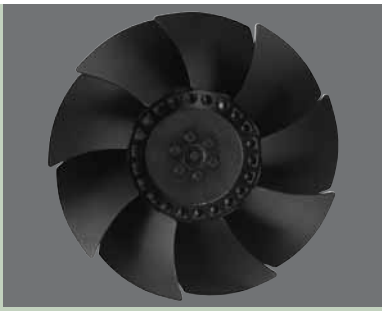

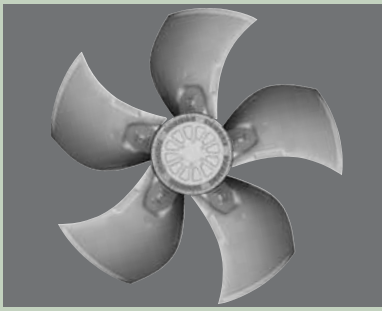

AC axial fans S series

AC axial fans, S series	Ø 200 - Ø 450	24
AC axial fans, S series	Ø 500 - Ø 910	74

AC axial fans

S series, Ø 200

- **Material:** Guard grille: Steel, phosphated and coated in black plastic
  Wall ring: Sheet steel, pre-galvanised and coated in black plastic
  Blades: Sheet steel, coated in black
  Rotor: Coated in black
- **Number of blades:** 9
- **Direction of rotation:** Counter-clockwise, seen on rotor
- **Type of protection:** IP 44
- **Insulation class:** "B"
- **Mounting position:** Shaft horizontal or rotor on bottom; rotor on top on request
- **Condensate discharges:** Rotor-side
- **Mode of operation:** Continuous operation (S1)
- **Bearings:** Maintenance-free ball bearings

Nominal data

Type	Motor	Curve	Nominal voltage VAC	Frequency Hz	Air flow m³/h	Speed/rpm rpm	Power input W	Current draw A	Capacitor µF/VDB	Sound pressure level dB(A)	Max. operative range Pa	Perm. amb. temp. °C	Mass without attachments kg	Electr. connection p. 416 f.
*2D 200 (1)	M2D 068-BF	A	3~ 230/400 3~ 230/400	50 60	890 990	2600 2900	68 70	0.29/0.17 0.23/0.13	— —	65 68	140 140	-25 to +45 -25 to +70	1.6	C1)/C2)
*2E 200	M2E 068-BF	B	1~ 230 1~ 230	50 60	890 990	2600 2900	64 78	0.30 0.34	1.5 /400 1.5 /400	65 68	150 150	-25 to +70 -25 to +70	1.4	A1)
*4D 200 (1)	M4D 068-BF	C	3~ 230/400 3~ 230/400	50 60	500 600	1440 1690	20 20	0.12/0.07 0.10/0.06	— —	43 47	70 90	-25 to +80 -25 to +90	1.4	C1)/C2)
*4S 200	M4S 068-BF	D	1~ 230 1~ 230	50 60	470 540	1370 1580	30 27	0.21 0.19	— —	42 46	50 50	-25 to +75 -25 to +80	1.2	B)

subject to alterations

(1) 230 VAC Δ / 400 VAC Y

Curves

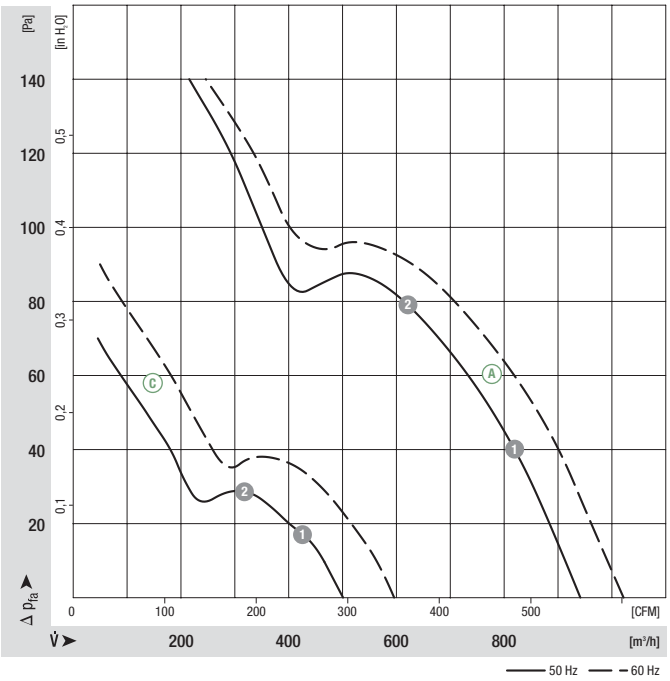

	n [rpm]	P_1 [W]	I [A]
A 1	2540	70	0.29/0.17
A 2	2470	74	0.29/0.17
C 1	1430	21	0.12/0.07
C 2	1420	23	0.12/0.07

ebmpapst

- **Motor protection:** Ⓐ Ⓒ Without TOP, Ⓑ Ⓓ TOP wired internally
- **Cable exit:** Ⓐ Ⓒ Lateral, Ⓑ Ⓓ variable
- **Protection class:** I
- **Product conforming to standards:** EN 60335-1, Ⓑ Ⓓ also CE
- **Approvals:** Ⓑ CCC

Direction of air flow

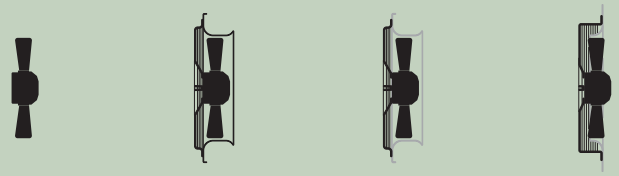

	❮ "V"/"A" ❯ Without attachments	❮ "V"/"A" ❯ With full round nozzle (1)	❮ "V"/"A" ❯ With guard grille for full nozzle	❮ "V"/"A" ❯ With guard grille for short nozzle
"V"	A2D 200-AH18 -01	W2D 200-CH18 -01	S2D 200-BH18 -01	S2D 200-AH18 -01
"A"	A2D 200-AI18 -01	W2D 200-CI18 -01	S2D 200-BI18 -01	S2D 200-AI18 -01
"V"	A2E 200-AH38 -01	W2E 200-CH38 -01	S2E 200-BH38 -01	S2E 200-AH38 -01
"A"	A2E 200-AI38 -01	W2E 200-CI38 -01	S2E 200-BI38 -01	S2E 200-AI38 -01
"V"	A4D 200-AH14 -01	W4D 200-CH14 -01	S4D 200-BH14 -01	S4D 200-AH14 -01
"A"	A4D 200-AI14 -01	W4D 200-CI14 -01	S4D 200-BI14 -01	S4D 200-AI14 -01
"V"	A4S 200-AH04 -01	W4S 200-CH04 -01	S4S 200-BH04 -01	S4S 200-AH04 -01
"A"	A4S 200-AI04 -01	W4S 200-CI04 -01	S4S 200-BI04 -01	S4S 200-AI04 -01

(1) Increased noise levels in "V" direction of air flow

Curves

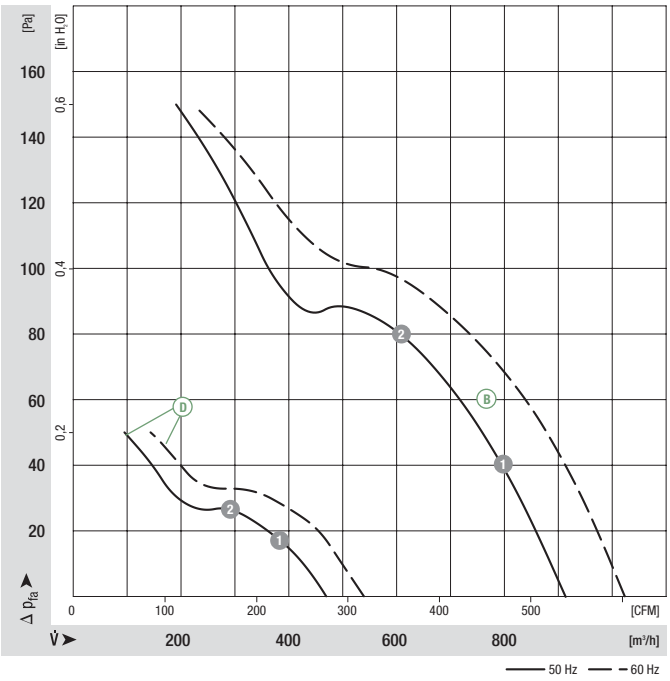

		n [rpm]	P_1 [W]	I [A]
Ⓑ	❶	2555	67	0.31
Ⓑ	❷	2465	70	0.32
Ⓓ	❶	1360	31	0.22
Ⓓ	❷	1350	31	0.22

AC axial fans

S series, Ø 200, drawings of directions of air flow "V" and "A"

Without attachments

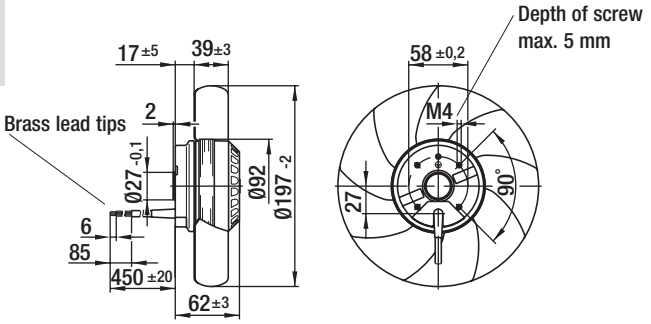

Type	
A2D 200-AH18 -01	"V"
A2D 200-AI18 -01	"A"
A2E 200-AH38 -01	"V"
A2E 200-AI38 -01	"A"
A4D 200-AH14 -01	"V"
A4D 200-AI14 -01	"A"
A4S 200-AH04 -01	"V"
A4S 200-AI04 -01	"A"

With full round nozzle

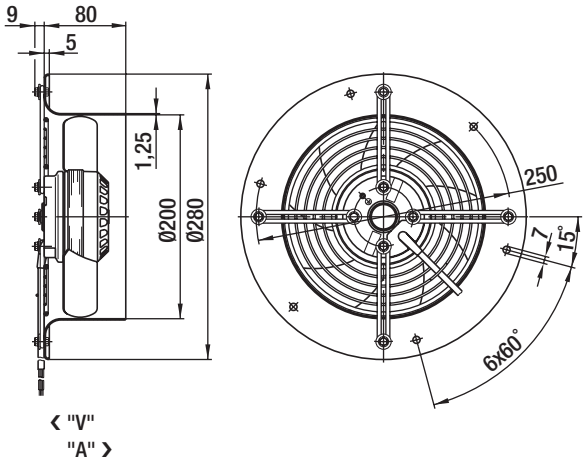

Type	
W2D 200-CH18 -01	"V"
W2D 200-CI18 -01	"A"
W2E 200-CH38 -01	"V"
W2E 200-CI38 -01	"A"
W4D 200-CH14 -01	"V"
W4D 200-CI14 -01	"A"
W4S 200-CH04 -01	"V"
W4S 200-CI04 -01	"A"

With guard grille for full nozzle

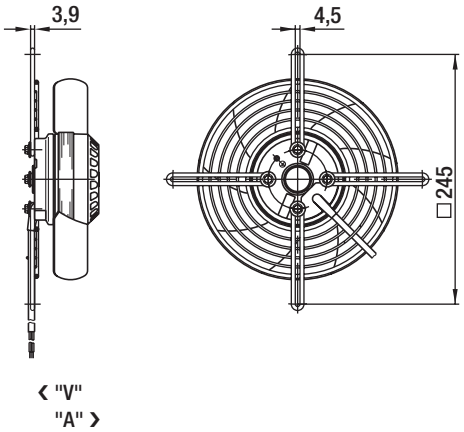

Type	
S2D 200-BH18 -01	"V"
S2D 200-BI18 -01	"A"
S2E 200-BH38 -01	"V"
S2E 200-BI38 -01	"A"
S4D 200-BH14 -01	"V"
S4D 200-BI14 -01	"A"
S4S 200-BH04 -01	"V"
S4S 200-BI04 -01	"A"

With guard grille for short nozzle

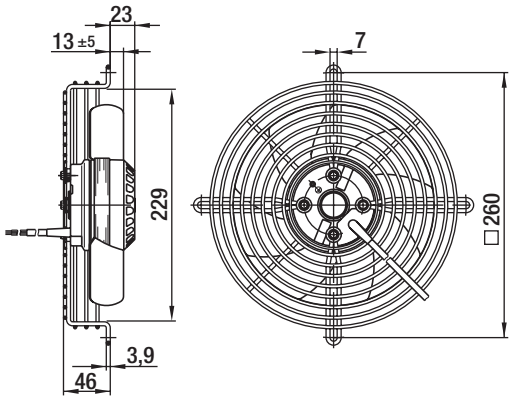

‹ "V"
"A" ›

Type	
S2D 200-AH18 -01	"V"
S2D 200-AI18 -01	"A"
S2E 200-AH38 -01	"V"
S2E 200-AI38 -01	"A"
S4D 200-AH14 -01	"V"
S4D 200-AI14 -01	"A"
S4S 200-AH04 -01	"V"
S4S 200-AI04 -01	"A"

AC axial fans

S series, Ø 250

- **Material:** Guard grille: Steel, phosphated and coated in black plastic
  Wall ring: Sheet steel, pre-galvanised and coated in black plastic
  Blades: Sheet steel, coated in black
  Rotor: Coated in black
- **Number of blades:** 7
- **Direction of rotation:** Counter-clockwise, seen on rotor
- **Type of protection:** IP 44
- **Insulation class:** "B"
- **Mounting position:** Shaft horizontal or rotor on bottom; rotor on top on request
- **Condensate discharges:** Rotor-side
- **Mode of operation:** Continuous operation (S1)
- **Bearings:** Maintenance-free ball bearings

Nominal data

Type	Motor	Curve	Nominal voltage VAC	Frequency Hz	Air flow m³/h	Speed/rpm rpm	Power input W	Current draw A	Capacitor µF/VDB	Sound pressure level dB(A)	Max. operative range Pa	Perm. amb. temp. °C	Mass without attachments kg	Electr. connection p. 416 f.
*2D 250 (1)	M2D 068-CF	A	3~ 230/400 3~ 230/400	50 60	1830 1950	2500 2650	100 140	0.34/0.20 0.40/0.23	— —	69 70	150 150	-25 to +65 -25 to +45	2.1	C1)/C2)
*2E 250	M2E 068-CF	B	1~ 230 1~ 230	50 60	1820 1970	2450 2600	115 150	0.51 0.66	3.0 /400 3.0 /400	69 71	120 85	-25 to +65 -25 to +50	1.9	A1)
*4D 250 (1)	M4D 068-CF	C	3~ 230/400 3~ 230/400	50 60	1010 1140	1400 1580	25 32	0.12/0.07 0.12/0.07	— —	54 57	70 70	-25 to +85 -25 to +80	1.9	C1)/C2)
*4E 250	M4E 068-BF	D	1~ 230 1~ 230	50 60	1010 1200	1400 1630	42 45	0.19 0.20	1.5 /400 1.5 /400	54 58	80 100	-25 to +55 -25 to +70	1.9	A1)
*4S 250	M4S 068-CF	E	1~ 230 1~ 230	50 60	1000 1160	1390 1600	69 63	0.53 0.45	— —	54 58	80 80	-25 to +50 -25 to +65	1.7	B)

subject to alterations

(1) 230 VAC Δ / 400 VAC Y

Curves

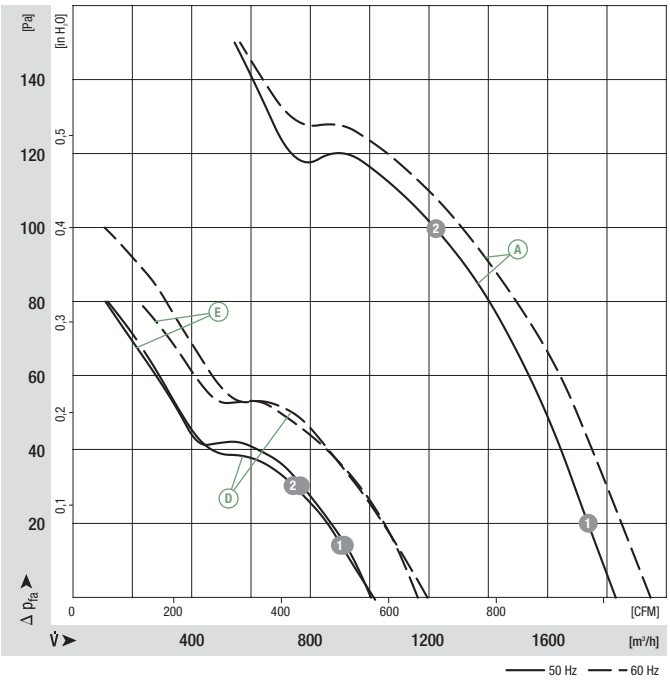

	n [rpm]	P_1 [W]	I [A]
A 1	2455	106	0.34/0.20
A 2	2310	125	0.38/0.22
D 1	1370	43	0.20
D 2	1360	45	0.20
E 1	1370	71	0.53
E 2	1360	73	0.53

ebmpapst

- **Motor protection:** Ⓐ Ⓒ Without TOP, Ⓑ Ⓓ Ⓔ TOP wired internally
- **Cable exit:** Ⓐ Ⓒ Ⓔ Lateral, Ⓑ Ⓓ variable
- **Protection class:** I
- **Product conforming to standards:** EN 60335-1, Ⓑ Ⓓ Ⓔ also CE
- **Approvals:** Ⓐ Ⓑ Ⓓ CCC; Ⓓ also GOST

Direction of air flow

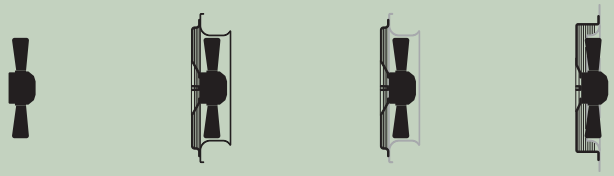

	❮ "V"/"A" ❯ Without attachments	❮ "V"/"A" ❯ With full round nozzle (1)	❮ "V"/"A" ❯ With guard grille for full nozzle	❮ "V"/"A" ❯ With guard grille for short nozzle
"V"	A2D 250-AH02 -01	W2D 250-CH02 -01	S2D 250-BH02 -01	S2D 250-AH02 -01
"A"	A2D 250-AI02 -01	W2D 250-CI02 -01	S2D 250-BI02 -01	S2D 250-AI02 -01
"V"	A2E 250-AL06 -01	W2E 250-CL06 -01	S2E 250-BL06 -01	S2E 250-AL06 -01
"A"	A2E 250-AM06 -01	W2E 250-CM06 -01	S2E 250-BM06 -01	S2E 250-AM06 -01
"V"	A4D 250-AH22 -01	W4D 250-CH22 -01	S4D 250-BH22 -01	S4D 250-AH22 -01
"A"	A4D 250-AI22 -01	W4D 250-CI22 -01	S4D 250-BI22 -01	S4D 250-AI22 -01
"V"	A4E 250-AH02 -01	W4E 250-CH02 -01	S4E 250-BH02 -01	S4E 250-AH02 -01
"A"	A4E 250-AI02 -01	W4E 250-CI02 -01	S4E 250-BI02 -01	S4E 250-AI02 -01
"V"	A4S 250-AH02 -01	W4S 250-CH02 -01	S4S 250-BH02 -01	S4S 250-AH02 -01
"A"	A4S 250-AI02 -01	W4S 250-CI02 -01	S4S 250-BI02 -01	S4S 250-AI02 -01

(1) Increased noise levels in "V" direction of air flow

Curves

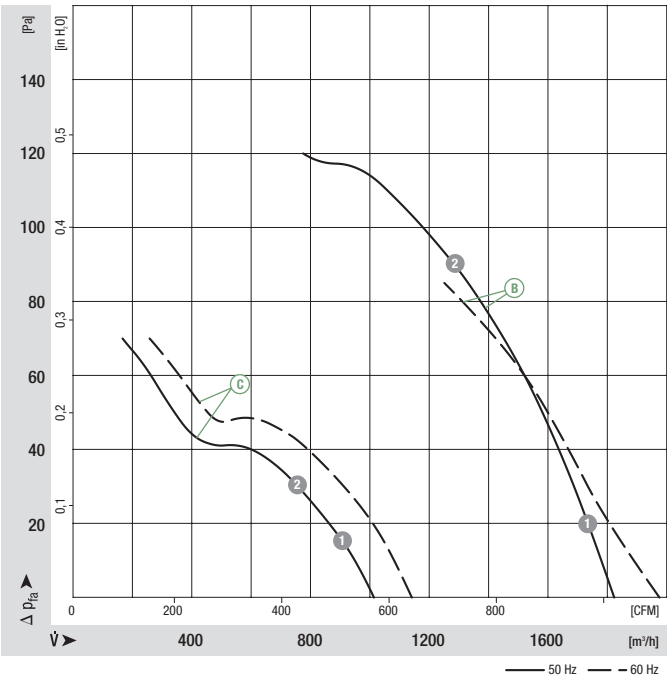

	n [rpm]	P_1 [W]	I [A]
Ⓑ ❶	2455	116	0.51
Ⓑ ❷	2290	132	0.57
Ⓒ ❶	1375	27	0.12/0.07
Ⓒ ❷	1350	30	0.12/0.07

AC axial fans

S series, Ø 250, drawings of directions of air flow "V" and "A"

Without attachments

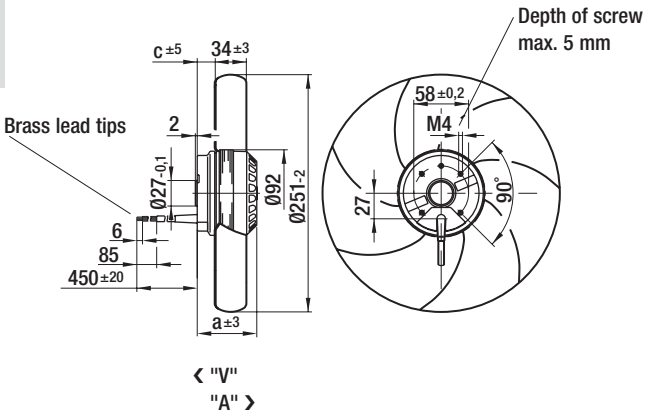

Type		a	c
A2D 250-AH02 -01	"V"	72.0	18.0
A2D 250-AI02 -01	"A"	72.0	21.0
A2E 250-AL06 -01	"V"	72.0	18.0
A2E 250-AM06 -01	"A"	72.0	27.0
A4D 250-AH22 -01	"V"	72.0	18.0
A4D 250-AI22 -01	"A"	72.0	27.0
A4E 250-AH02 -01	"V"	62.0	14.0
A4E 250-AI02 -01	"A"	62.0	22.0
A4S 250-AH02 -01	"V"	72.0	18.0
A4S 250-AI02 -01	"A"	72.0	23.0

With full round nozzle

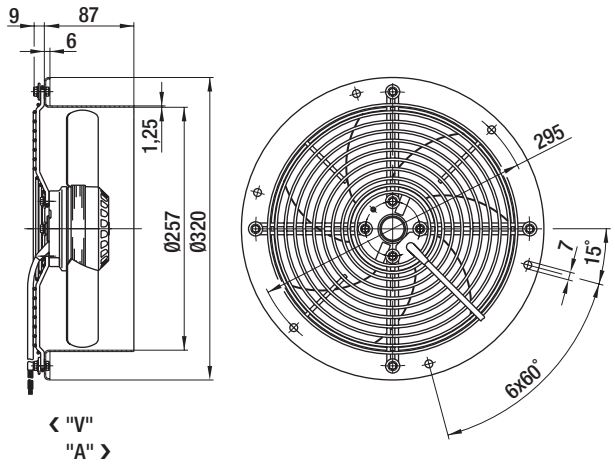

Type	
W2D 250-CH02 -01	"V"
W2D 250-CI02 -01	"A"
W2E 250-CL06 -01	"V"
W2E 250-CM06 -01	"A"
W4D 250-CH22 -01	"V"
W4D 250-CI22 -01	"A"
W4E 250-CH02 -01	"V"
W4E 250-CI02 -01	"A"
W4S 250-CH02 -01	"V"
W4S 250-CI02 -01	"A"

With guard grille for full nozzle

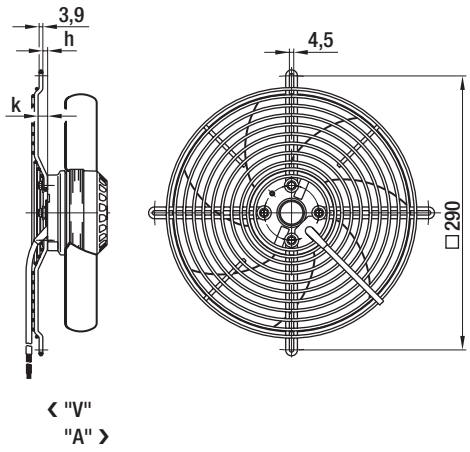

Type		h	k
S2D 250-BH02 -01	"V"	5.0	10.0
S2D 250-BI02 -01	"A"	0	0
S2E 250-BL06 -01	"V"	5.0	10.0
S2E 250-BM06 -01	"A"	0	0
S4D 250-BH22 -01	"V"	5.0	10.0
S4D 250-BI22 -01	"A"	0	0
S4E 250-BH02 -01	"V"	5.0	10.0
S4E 250-BI02 -01	"A"	0	0
S4S 250-BH02 -01	"V"	5.0	10.0
S4S 250-BI02 -01	"A"	0	0

With guard grille for short nozzle

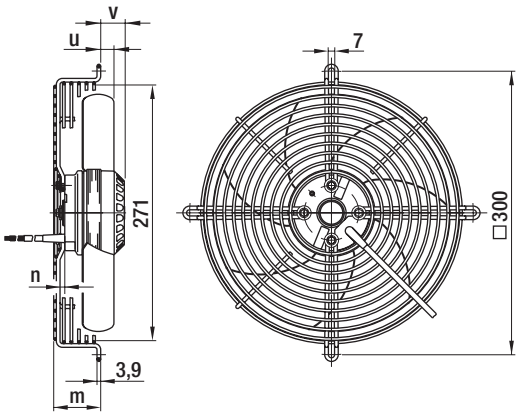

‹ "V"
"A" ›

Type		m	n	u	v
S2D 250-AH02 -01	"V"	50.0	5.0	14.0	34.0
S2D 250-AI02 -01	"A"	45.0	0	17.0	34.0
S2E 250-AL06 -01	"V"	50.0	5.0	14.0	34.0
S2E 250-AM06 -01	"A"	45.0	0	23.0	34.0
S4D 250-AH22 -01	"V"	50.0	5.0	14.0	34.0
S4D 250-AI22 -01	"A"	45.0	0	23.0	34.0
S4E 250-AH02 -01	"V"	50.0	5.0	10.0	24.0
S4E 250-AI02 -01	"A"	45.0	0	18.0	24.0
S4S 250-AH02 -01	"V"	50.0	5.0	14.0	34.0
S4S 250-AI02 -01	"A"	45.0	0	19.0	34.0

AC axial fans 2-pole

S series, Ø 300

- **Material:** Guard grille: Steel, phosphated and coated in black plastic
  Wall ring: Sheet steel, pre-galvanised and coated in black plastic
  Blades: Sheet steel, coated in black
  Rotor: Coated in black
- **Number of blades:** 5
- **Direction of rotation:** Direction of air flow "V" counter-clockwise, direction of air flow "A" counter-clockwise, seen on rotor
- **Type of protection:** IP 44
- **Insulation class:** "B"
- **Mounting position:** Shaft horizontal or rotor on bottom; rotor on top on request
- **Condensate discharges:** Rotor-side
- **Mode of operation:** Continuous operation (S1)
- **Bearings:** Maintenance-free ball bearings

Nominal data		Curve	Nominal voltage	Frequency	Air flow	Speed/rpm	Power input	Current draw	Capacitor	Sound pressure level	Max. operative range	Perm. amb. temp.	Mass without attachments	Electr. connection
Type	**Motor**		**VAC**	**Hz**	**m³/h**	**rpm**	**W**	**A**	**µF/VDB**	**dB(A)**	**Pa**	**°C**	**kg**	p. 416 f.
***2D 300** (1)	M2D 074-DF	A	3~ 230/400 3~ 230/400	50 60	3130 3350	2580 2750	210 300	0.62/0.36 0.83/0.48	— —	72 73	200 125	-25 to +55 -25 to +40	3.0	C1)/C2)
***2E 300**	M2E 074-DF	B	1~ 230 1~ 230	50 60	3410 3740	2700 3000	230 350	1.10 1.55	8.0 /400 8.0 /400	73 76	200 50	-25 to +50 -25 to +40	3.0	A1)

subject to alterations

(1) 230 VAC Δ / 400 VAC Y

Curves

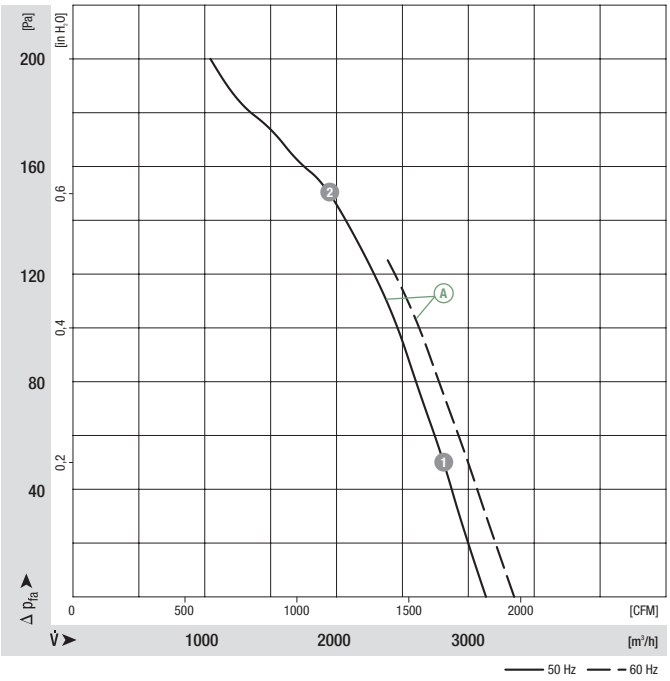

	n [rpm]	P_1 [W]	I [A]
A 1	2530	228	0.68/0.39
A 2	2400	273	0.78/0.45

ebmpapst

- **Motor protection:** Ⓐ Without TOP, Ⓑ TOP wired internally
- **Cable exit:** Variable
- **Protection class:** I
- **Product conforming to standards:** EN 60335-1, Ⓑ also CE
- **Approvals:** CCC

Direction of air flow

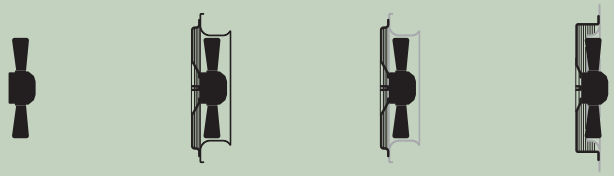

	❮ "V"/"A" ❯ Without attachments	❮ "V"/"A" ❯ With full round nozzle	❮ "V"/"A" ❯ With guard grille for full nozzle	❮ "V"/"A" ❯ With guard grille for short nozzle
"V"	A2D 300-AP02 -01	W2D 300-CP02 -30	S2D 300-BP02 -30	S2D 300-AP02 -30
"A"	A2D 300-AP02 -02	W2D 300-CP02 -31	S2D 300-BP02 -31	S2D 300-AP02 -31
"V"	A2E 300-AP02 -01	W2E 300-CP02 -30	S2E 300-BP02 -30	S2E 300-AP02 -30
"A"	A2E 300-AP02 -02	W2E 300-CP02 -31	S2E 300-BP02 -31	S2E 300-AP02 -31

Curves

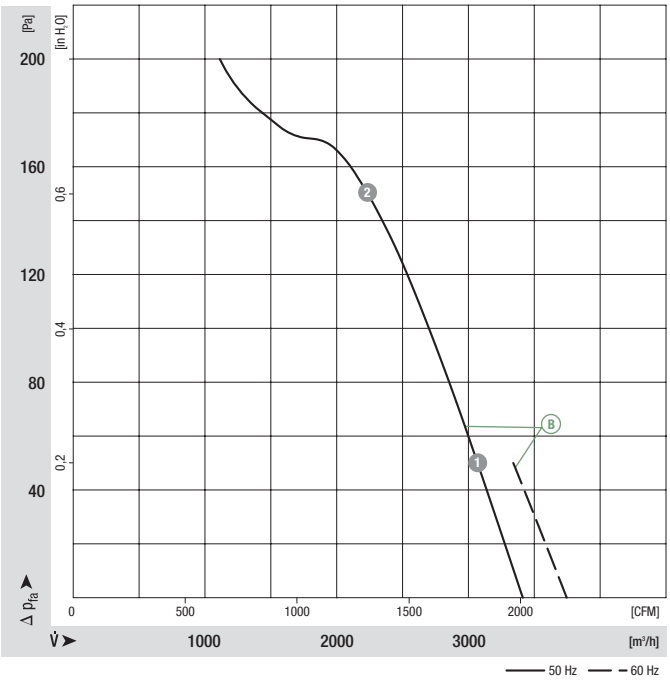

	n [rpm]	P_1 [W]	I [A]
Ⓑ ❶	2680	252	1.11
Ⓑ ❷	2560	290	1.27

AC axial fans 2-pole

S series, Ø 300, drawings of directions of air flow "V" and "A"

Without attachments

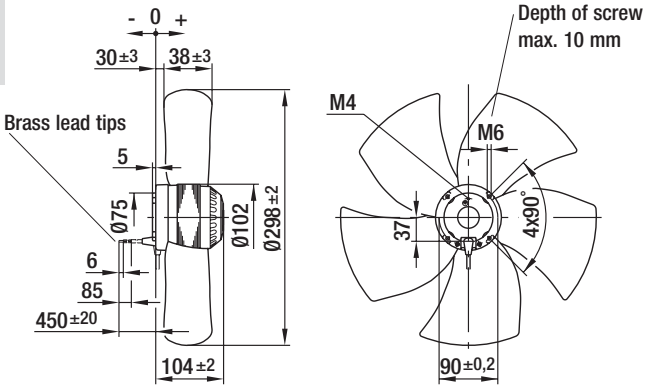

Type	
A2D 300-AP02 -01	"V"
A2D 300-AP02 -02	"A"
A2E 300-AP02 -01	"V"
A2E 300-AP02 -02	"A"

With full round nozzle

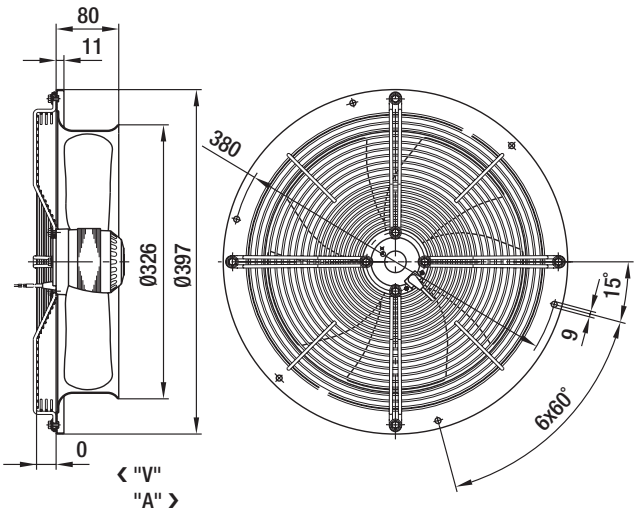

Type	
W2D 300-CP02 -30	"V"
W2D 300-CP02 -31	"A"
W2E 300-CP02 -30	"V"
W2E 300-CP02 -31	"A"

With guard grille for full nozzle

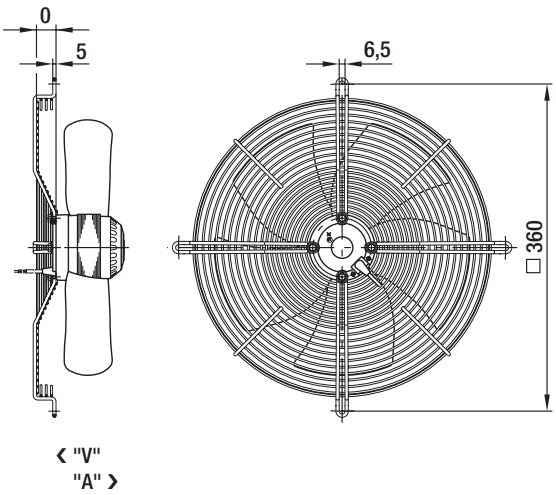

Type	
S2D 300-BP02 -30	"V"
S2D 300-BP02 -31	"A"
S2E 300-BP02 -30	"V"
S2E 300-BP02 -31	"A"

With guard grille for short nozzle

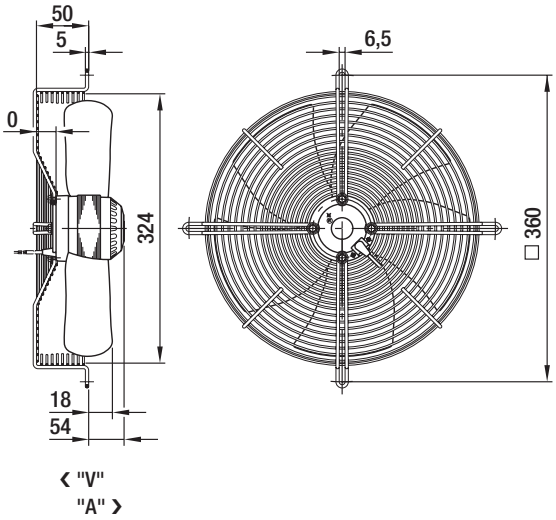

Type	
S2D 300-AP02 -30	"V"
S2D 300-AP02 -31	"A"
S2E 300-AP02 -30	"V"
S2E 300-AP02 -31	"A"

AC axial fans 4-pole

S series, Ø 300

- **Material:** Guard grille: Steel, phosphated and coated in black plastic
  Wall ring: Sheet steel, pre-galvanised and coated in black plastic
  Blades: Sheet steel, coated in black
  Rotor: Coated in black
- **Number of blades:** 5
- **Direction of rotation:** Direction of air flow "V" counter-clockwise, direction of air flow "A" counter-clockwise, seen on rotor
- **Type of protection:** IP 44
- **Insulation class:** "B"
- **Mounting position:** Shaft horizontal or rotor on bottom; rotor on top on request
- **Condensate discharges:** Rotor-side
- **Mode of operation:** Continuous operation (S1)
- **Bearings:** Maintenance-free ball bearings

Nominal data

Type	Motor	Curve	Nominal voltage VAC	Frequency Hz	Air flow m³/h	Speed/rpm rpm	Power input W	Current draw A	Capacitor µF/VDB	Sound pressure level dB(A)	Max. operative range Pa	Perm. amb. temp. °C	Mass without attachments kg	Electr. connection p. 416 f.
*4D 300 (1)	M4D 068-CF	A	3~ 230/400 3~ 230/400	50 60	1860 2080	1370 1540	60 75	0.29/0.17 0.26/0.15	— —	57 60	90 60	-25 to +45 -25 to +40	1.9	C1)/C2)
*4E 300	M4E 068-CF	B	1~ 230 1~ 230	50 60	1740 2040	1400 1630	68 92	0.30 0.41	2.0 / 400 2.0 / 400	59 63	80 70	-25 to +60 -25 to +45	1.9	A1)

subject to alterations

(1) 230 VAC Δ / 400 VAC Y

Curves

	n [rpm]	P_1 [W]	I [A]
A 1	1350	66	0.29/0.17
A 2	1260	88	0.33/0.19

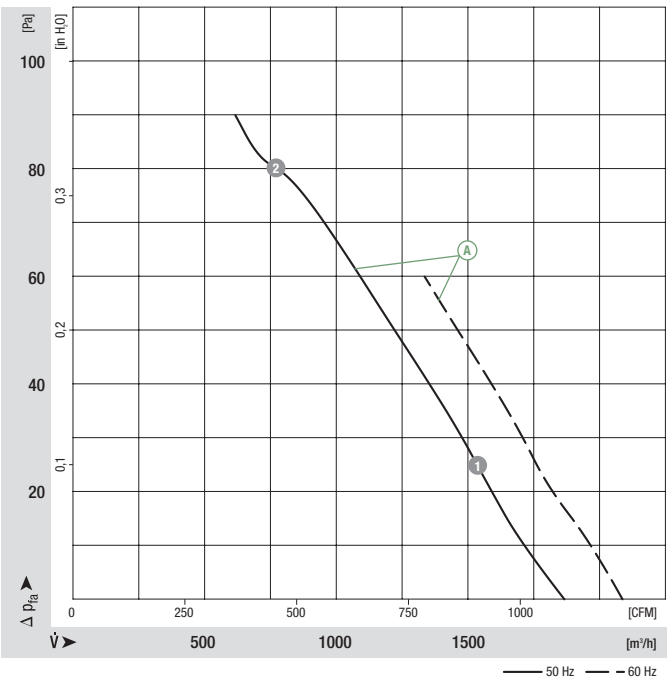

ebmpapst

- **Motor protection:** Ⓐ Without TOP, Ⓑ TOP wired internally
- **Cable exit:** Ⓐ Axial, Ⓑ variable
- **Protection class:** I
- **Product conforming to standards:** EN 60335-1, Ⓑ also CE
- **Approvals:** CCC; Ⓑ also GOST

Direction of air flow

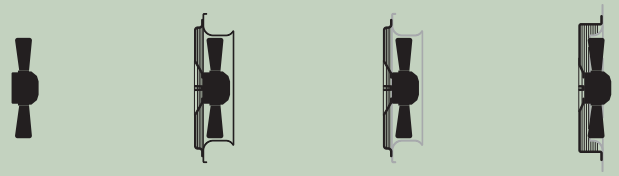

	❮ "V"/"A" ❯ Without attachments	❮ "V"/"A" ❯ With full round nozzle	❮ "V"/"A" ❯ With guard grille for full nozzle	❮ "V"/"A" ❯ With guard grille for short nozzle
"V"	A4D 300-AP28 -01	W4D 300-CP28 -30	S4D 300-BP28 -30	S4D 300-AP28 -30
"A"	A4D 300-AP28 -02	W4D 300-CP28 -31	S4D 300-BP28 -31	S4D 300-AP28 -31
"V"	A4E 300-AP26 -01	W4E 300-CP26 -30	S4E 300-BP26 -30	S4E 300-AP26 -30
"A"	A4E 300-AP26 -02	W4E 300-CP26 -31	S4E 300-BP26 -31	S4E 300-AP26 -31

Curves

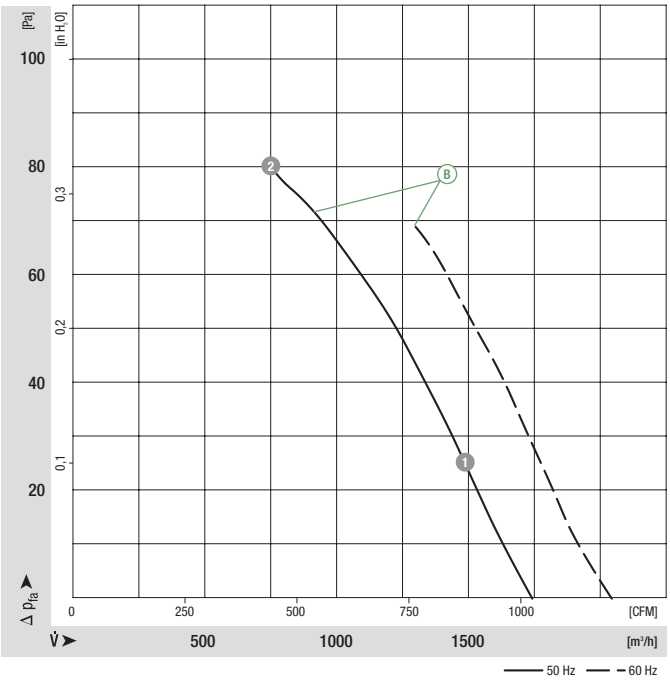

	n [rpm]	P_1 [W]	I [A]
Ⓑ ❶	1390	72	0.32
Ⓑ ❷	1290	88	0.39

AC axial fans 4-pole

S series, Ø 300, drawings of directions of air flow "V" and "A"

Without attachments

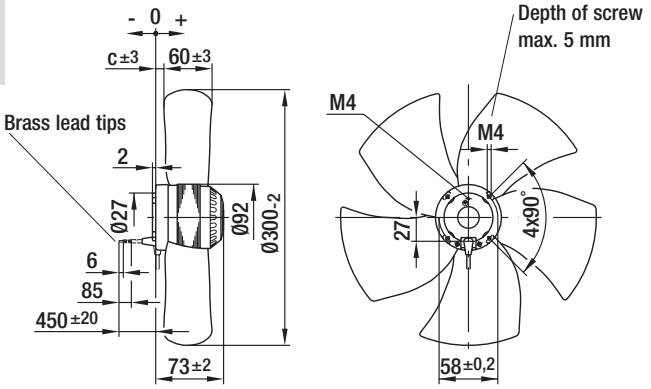

‹ "V"
"A" ›

Type		c
A4D 300-AP28 -01	"V"	13.0
A4D 300-AP28 -02	"A"	-7.0
A4E 300-AP26 -01	"V"	13.0
A4E 300-AP26 -02	"A"	-7.0

With full round nozzle

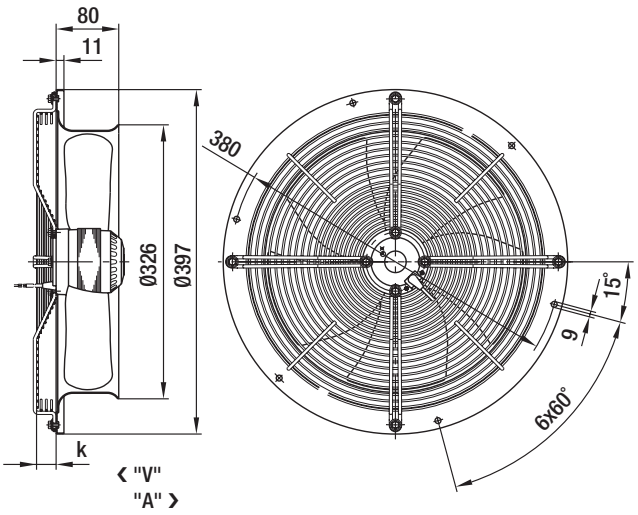

‹ "V"
"A" ›

Type		k
W4D 300-CP28 -30	"V"	0.0
W4D 300-CP28 -31	"A"	30.0
W4E 300-CP26 -30	"V"	0.0
W4E 300-CP26 -31	"A"	30.0

With guard grille for full nozzle

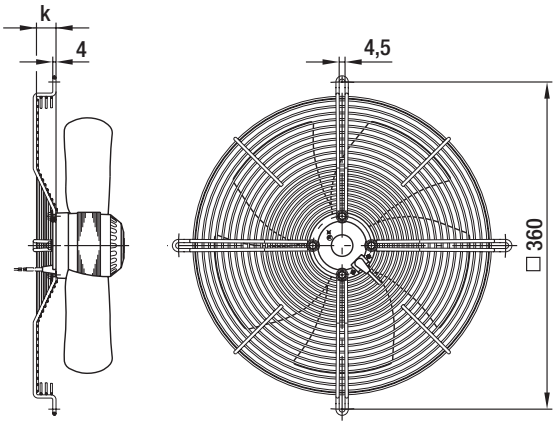

‹ "V"
"A" ›

Type		k
S4D 300-BP28 -30	"V"	0.0
S4D 300-BP28 -31	"A"	30.0
S4E 300-BP26 -30	"V"	0.0
S4E 300-BP26 -31	"A"	30.0

With guard grille for short nozzle

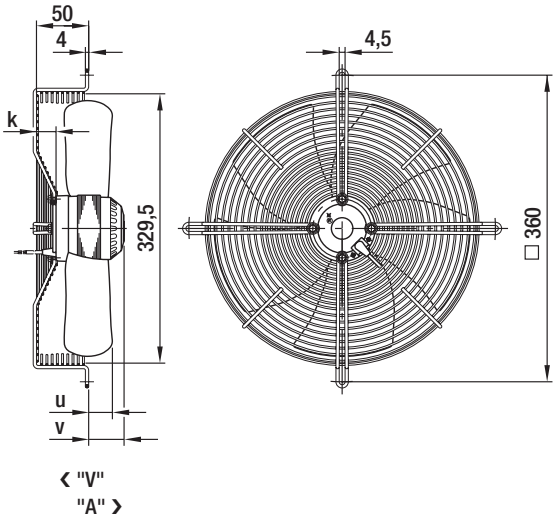

Type		k	u	v
S4D 300-AP28 -30	"V"	0.0	23.0	23.0
S4D 300-AP28 -31	"A"	30.0	29.0	49.0
S4E 300-AP26 -30	"V"	0.0	23.0	23.0
S4E 300-AP26 -31	"A"	30.0	29.0	49.0

AC axial fans

S series, Ø 315

- **Material:** Guard grille: Steel, phosphated and coated in black plastic
  Wall ring: Sheet steel, pre-galvanised and coated in black plastic
  Blades: Sheet steel, coated in black
  Rotor: Coated in black
- **Number of blades:** 5
- **Direction of rotation:** Direction of air flow "V" counter-clockwise, direction of air flow "A" counter-clockwise, seen on rotor
- **Type of protection:** IP 44
- **Insulation class:** "B"
- **Mounting position:** Shaft horizontal or rotor on bottom; rotor on top on request
- **Condensate discharges:** Rotor-side
- **Mode of operation:** Continuous operation (S1)
- **Bearings:** Maintenance-free ball bearings

Nominal data		Curve	Nominal voltage	Frequency	Air flow	Speed/rpm	Power input	Current draw	Capacitor	Sound pressure level	Max. operative range	Perm. amb. temp.	Mass without attachments	Electr. connection
Type	**Motor**		**VAC**	**Hz**	**m³/h**	**rpm**	**W**	**A**	**µF/VDB**	**dB(A)**	**Pa**	**°C**	**kg**	p. 416 f.
***4D 315** (1)	M4D 068-DF	A	3~ 230/400 3~ 230/400	50 60	2450 2810	1400 1620	85 110	0.45/0.26 0.42/0.24	— —	60 64	120 120	-25 to +55 -25 to +55	2.4	C1)/C2)
***4E 315**	M4E 068-DF	B	1~ 230 1~ 230	50 60	2440 2840	1410 1650	102 120	0.52 0.53	4.0 / 400 4.0 / 400	59 64	120 120	-25 to +55 -25 to +55	2.4	A1)
***6E 315**	M6E 068-DF	C	1~ 230 1~ 230	50 60	1650 1950	950 1120	65 68	0.33 0.30	2.0 / 400 2.0 / 450	51 55	70 80	-25 to +50 -25 to +60	2.4	A1)

subject to alterations

(1) 230 VAC Δ / 400 VAC Y

Curves

	n [rpm]	P_1 [W]	I [A]
A 1	1400	90	0.45/0.26
A 2	1380	103	0.47/0.27

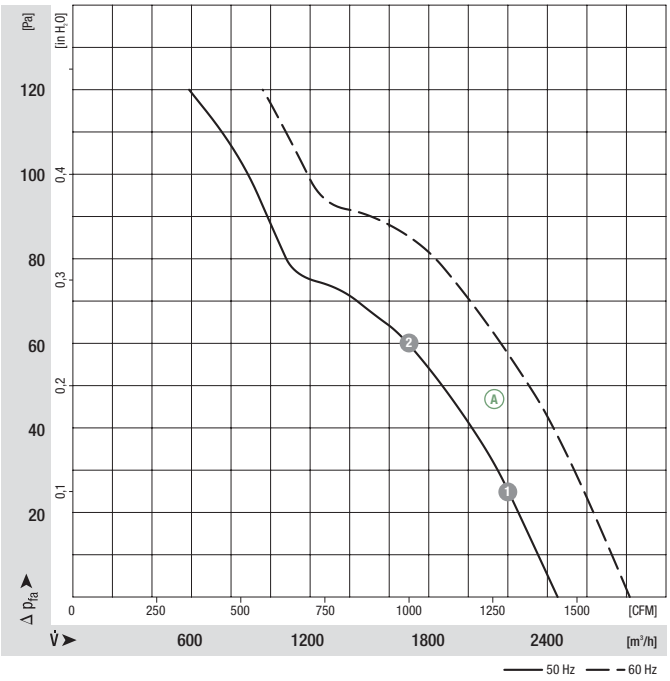

Drawings
p. 42 f.

ebmpapst

- **Motor protection:** Ⓐ Without TOP, Ⓑ Ⓒ TOP wired internally
- **Cable exit:** Axial
- **Protection class:** I
- **Product conforming to standards:** EN 60335-1, Ⓑ Ⓒ also CE
- **Approvals:** CCC; Ⓐ also GOST

Direction of air flow

	❮ "V"/"A" ❯ Without attachments	❮ "V"/"A" ❯ With full round nozzle	❮ "V"/"A" ❯ With guard grille for full nozzle	❮ "V"/"A" ❯ With guard grille for short nozzle	❮ "V" In-line duct fan
"V"	A4D 315-AP10 -01	W4D 315-CP10 -30	S4D 315-BP10 -30	S4D 315-AP10 -30	W4D 315-IP10 -01
"A"	A4D 315-AP10 -02	W4D 315-CP10 -31	S4D 315-BP10 -31	S4D 315-AP10 -31	—
"V"	A4E 315-AP18 -01	W4E 315-CP18 -30	S4E 315-BP18 -30	S4E 315-AP18 -30	W4E 315-IP18 -01
"A"	A4E 315-AP18 -02	W4E 315-CP18 -31	S4E 315-BP18 -31	S4E 315-AP18 -31	—
"V"	A6E 315-AP02 -01	W6E 315-CP02 -30	S6E 315-BP02 -30	S6E 315-AP02 -30	—
"A"	A6E 315-AP02 -02	W6E 315-CP02 -31	S6E 315-BP02 -31	S6E 315-AP02 -31	—

Curves

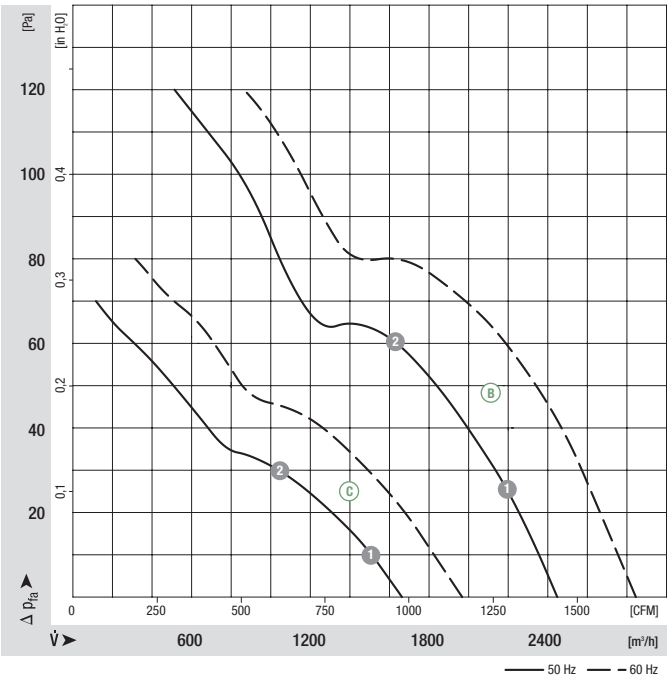

	n [rpm]	P_1 [W]	I [A]
Ⓑ ❶	1400	108	0.54
Ⓑ ❷	1380	120	0.57
Ⓒ ❶	945	63	0.33
Ⓒ ❷	930	66	0.33

Guard grille p. 362 f.
Streamer p. 371
Wall ring p. 372 f.
Terminal box p. 381
Capacitor p. 382 f.
Electr. connections p. 416 f.

AC axial fans

S series, Ø 315, drawings of directions of air flow "V" and "A"

Without attachments

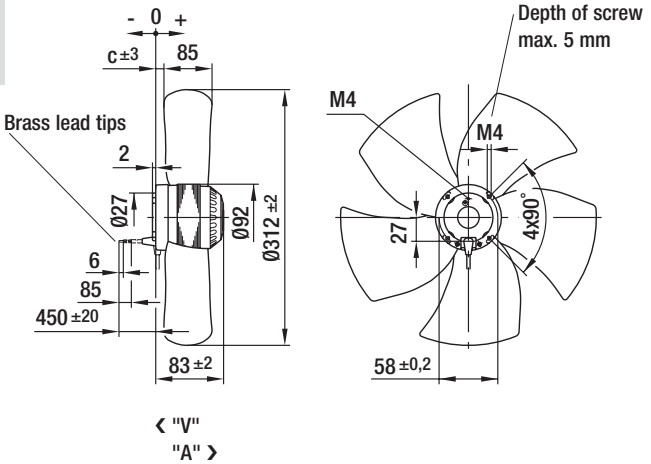

Type		c
A4D 315-AP10 -01	"V"	5.0
A4D 315-AP10 -02	"A"	-7.0
A4E 315-AP18 -01	"V"	5.0
A4E 315-AP18 -02	"A"	-7.0
A6E 315-AP02 -01	"V"	5.0
A6E 315-AP02 -02	"A"	-7.0

With full round nozzle

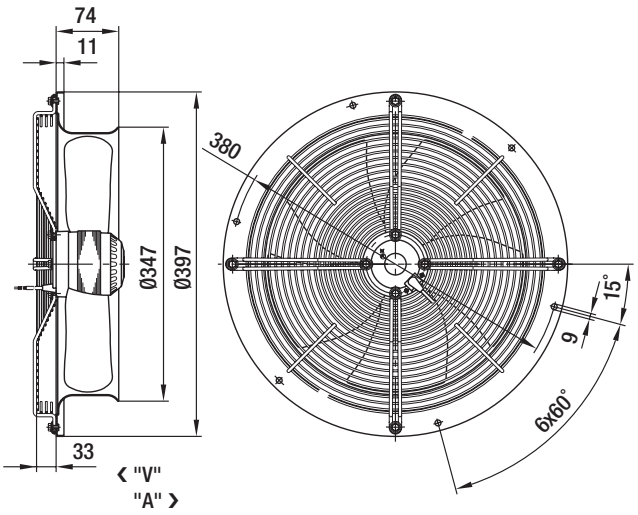

Type	
W4D 315-CP10 -30	"V"
W4D 315-CP10 -31	"A"
W4E 315-CP18 -30	"V"
W4E 315-CP18 -31	"A"
W6E 315-CP02 -30	"V"
W6E 315-CP02 -31	"A"

With guard grille for full nozzle

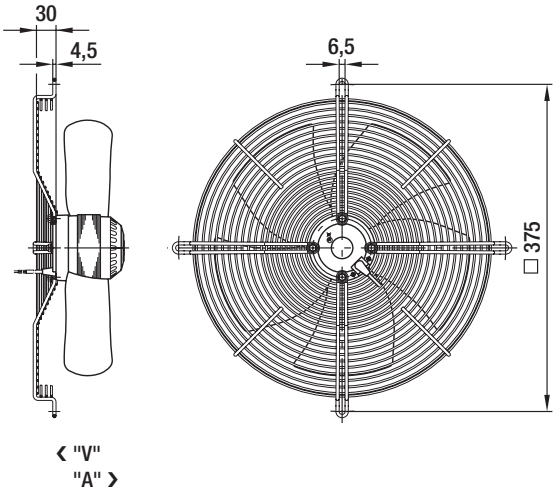

Type	
S4D 315-BP10 -30	"V"
S4D 315-BP10 -31	"A"
S4E 315-BP18 -30	"V"
S4E 315-BP18 -31	"A"
S6E 315-BP02 -30	"V"
S6E 315-BP02 -31	"A"

ebmpapst

With guard grille for short nozzle

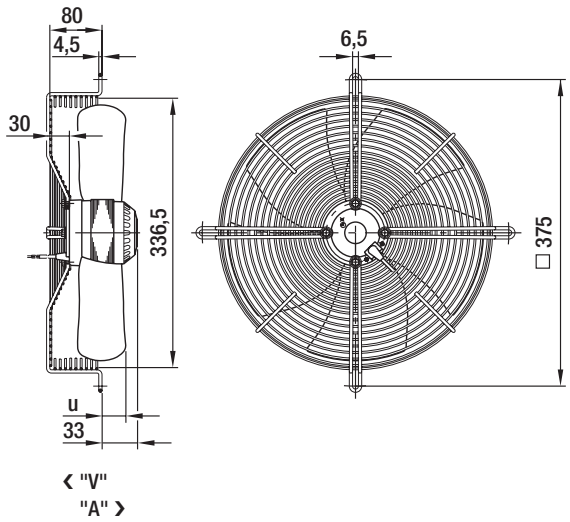

Type		u
S4D 315-AP10 -30	"V"	40.0
S4D 315-AP10 -31	"A"	28.0
S4E 315-AP18 -30	"V"	40.0
S4E 315-AP18 -31	"A"	28.0
S6E 315-AP02 -30	"V"	40.0
S6E 315-AP02 -31	"A"	28.0

In-line duct fan

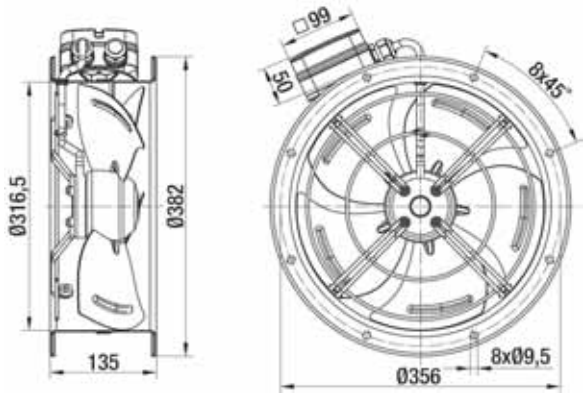

Type	
W4D 315-IP10 -01	"V"
W4E 315-IP18 -01	"V"

AC axial fans

S series, Ø 330

- **Material:** Guard grille: Steel, phosphated and coated in black plastic
  Wall ring: Sheet steel, pre-galvanised and coated in black plastic
  Blades: Sheet steel, coated in black
  Rotor: Coated in black
- **Number of blades:** 5
- **Direction of rotation:** Direction of air flow "V" counter-clockwise, direction of air flow "A" counter-clockwise, seen on rotor
- **Type of protection:** IP 44
- **Insulation class:** "B"
- **Mounting position:** Shaft horizontal or rotor on bottom; rotor on top on request
- **Condensate discharges:** Rotor-side
- **Mode of operation:** Continuous operation (S1)
- **Bearings:** Maintenance-free ball bearings

Nominal data

Type	Motor	Curve	Nominal voltage VAC	Frequency Hz	Air flow m³/h	Speed/rpm rpm	Power input W	Current draw A	Capacitor µF/VDB	Sound pressure level dB(A)	Max. operative range Pa	Perm. amb. temp. °C	Mass without attachments kg	Electr. connection p. 416 f.
*4D 330 (1)	M4D 068-DF	A	3~ 230/400 3~ 230/400	50 60	2800 3180	1390 1570	100 130	0.45/0.26 0.42/0.24	— —	59 63	120 120	-25 to +55 -25 to +45	2.6	C1)/C2)
*4E 330	M4E 068-DF	B	1~ 230 1~ 230	50 60	2830 3230	1390 1600	120 140	0.57 0.60	4.0 / 400 4.0 / 400	63 67	90 75	-25 to +50 -25 to +40	2.5	A1)
*6E 330	M6E 068-DF	C	1~ 230 1~ 230	50 60	1940 2280	940 1100	65 72	0.33 0.32	2.0 / 400 2.0 / 450	49 53	60 70	-25 to +50 -25 to +65	2.5	A1)

subject to alterations

(1) 230 VAC Δ / 400 VAC Y

Curves

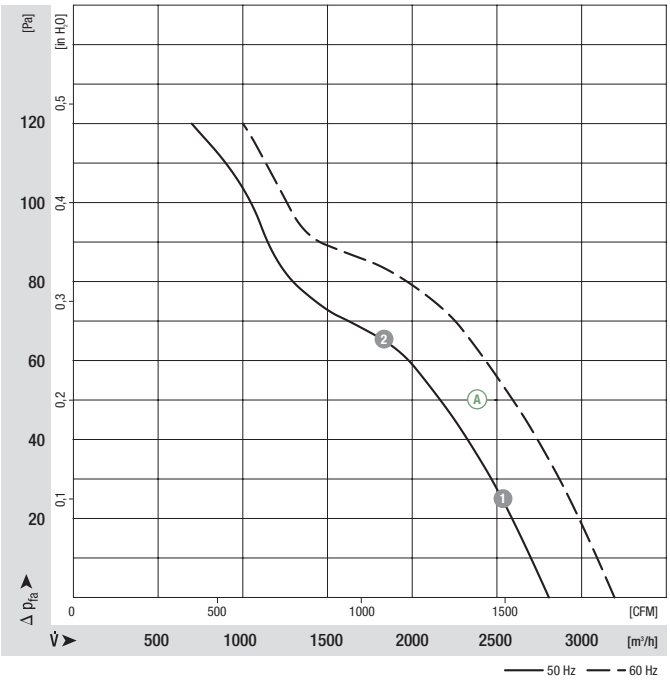

	n [rpm]	P_1 [W]	I [A]
A 1	1370	102	0.45/0.26
A 2	1325	126	0.48/0.28

ebmpapst

- **Motor protection:** Ⓐ Without TOP, Ⓑ Ⓒ TOP wired internally
- **Cable exit:** Axial
- **Protection class:** I
- **Product conforming to standards:** EN 60335-1, Ⓑ Ⓒ also CE
- **Approvals:** Ⓑ Ⓒ CCC

Direction of air flow

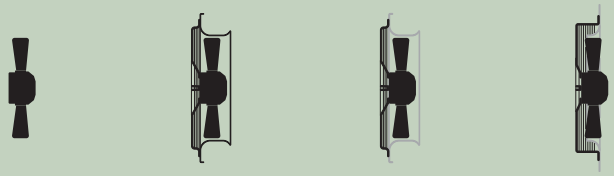

	❮ "V"/"A" ❯ Without attachments	❮ "V"/"A" ❯ With full round nozzle	❮ "V"/"A" ❯ With guard grille for full nozzle	❮ "V"/"A" ❯ With guard grille for short nozzle
"V"	A4D 330-AP10 -01	W4D 330-CP10 -30	S4D 330-BP10 -30	S4D 330-AP10 -30
"A"	A4D 330-AP10 -02	W4D 330-CP10 -31	S4D 330-BP10 -31	S4D 330-AP10 -31
"V"	A4E 330-AP18 -01	W4E 330-CP18 -30	S4E 330-BP18 -30	S4E 330-AP18 -30
"A"	A4E 330-AP18 -02	W4E 330-CP18 -31	S4E 330-BP18 -31	S4E 330-AP18 -31
"V"	A6E 330-AP02 -01	W6E 330-CP02 -30	S6E 330-BP02 -30	S6E 330-AP02 -30
"A"	A6E 330-AP02 -02	W6E 330-CP02 -31	S6E 330-BP02 -31	S6E 330-AP02 -31

Curves

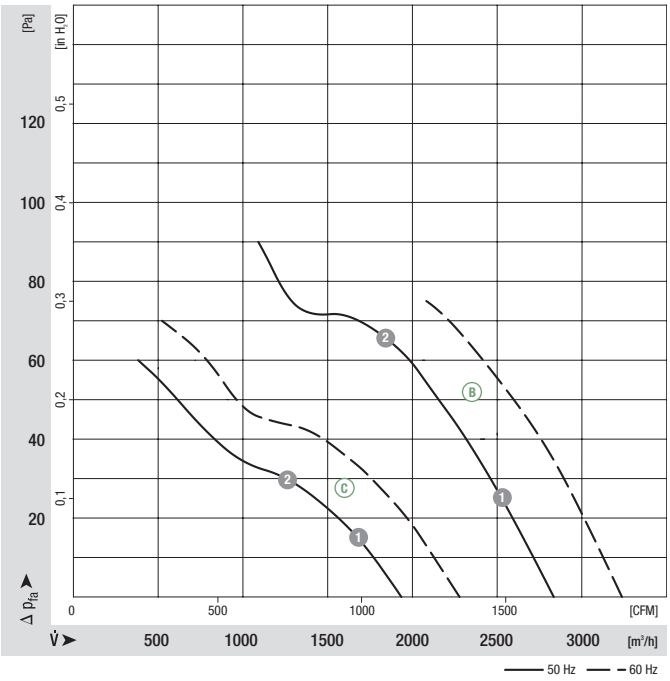

	n [rpm]	P_1 [W]	I [A]
Ⓑ ❶	1375	122	0.58
Ⓑ ❷	1325	140	0.64
Ⓒ ❶	925	68	0.34
Ⓒ ❷	910	70	0.35

AC axial fans

S series, Ø 330, drawings of directions of air flow "V" and "A"

Without attachments

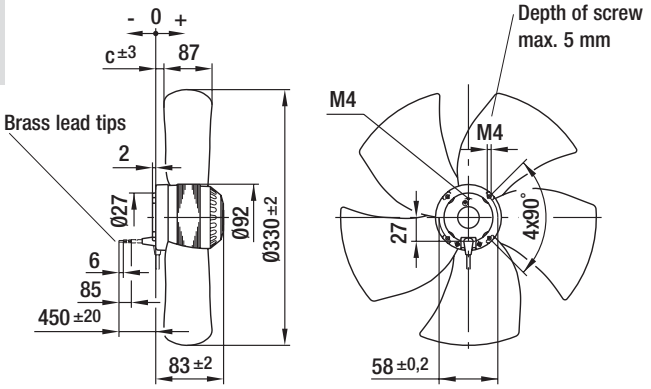

Type		c
A4D 330-AP10 -01	"V"	6.0
A4D 330-AP10 -02	"A"	-8.0
A4E 330-AP18 -01	"V"	6.0
A4E 330-AP18 -02	"A"	-8.0
A6E 330-AP02 -01	"V"	6.0
A6E 330-AP02 -02	"A"	-8.0

With full round nozzle

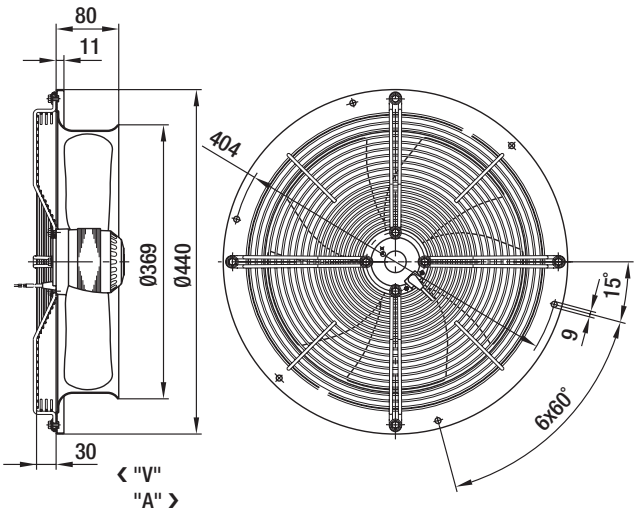

Type	
W4D 330-CP10 -30	"V"
W4D 330-CP10 -31	"A"
W4E 330-CP18 -30	"V"
W4E 330-CP18 -31	"A"
W6E 330-CP02 -30	"V"
W6E 330-CP02 -31	"A"

With guard grille for full nozzle

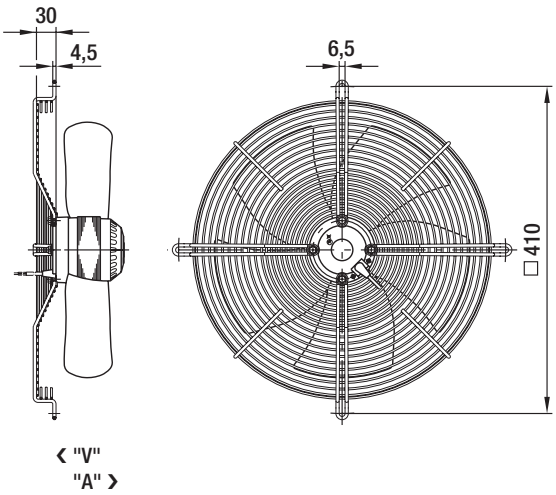

Type	
S4D 330-BP10 -30	"V"
S4D 330-BP10 -31	"A"
S4E 330-BP18 -30	"V"
S4E 330-BP18 -31	"A"
S6E 330-BP02 -30	"V"
S6E 330-BP02 -31	"A"

With guard grille for short nozzle

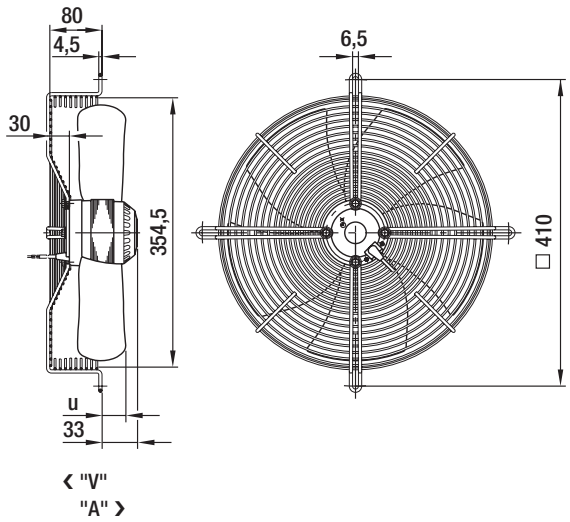

Type		u
S4D 330-AP10 -30	"V"	43.0
S4D 330-AP10 -31	"A"	29.0
S4E 330-AP18 -30	"V"	43.0
S4E 330-AP18 -31	"A"	29.0
S6E 330-AP02 -30	"V"	43.0
S6E 330-AP02 -31	"A"	29.0

AC axial fans

S series, Ø 350

- **Material:** Guard grille: Steel, phosphated and coated in black plastic
  Wall ring: Sheet steel, pre-galvanised and coated in black plastic
  Blades: Sheet steel, coated in black
  Rotor: Coated in black
- **Number of blades:** 5
- **Direction of rotation:** Direction of air flow "V" counter-clockwise, direction of air flow "A" counter-clockwise, seen on rotor
- **Type of protection:** IP 44
- **Insulation class:** Ⓐ Ⓒ "B", Ⓑ "F"
- **Mounting position:** Shaft horizontal or rotor on bottom; rotor on top on request
- **Condensate discharges:** Rotor-side
- **Mode of operation:** Continuous operation (S1)
- **Bearings:** Maintenance-free ball bearings

Nominal data		Curve	Nominal voltage	Frequency	Air flow	Speed/rpm	Power input	Current draw	Capacitor	Sound pressure level	Max. operative range	Perm. amb. temp.	Mass without attachments	Electr. connection
Type	**Motor**		**VAC**	**Hz**	**m³/h**	**rpm**	**W**	**A**	**µF/VDB**	**dB(A)**	**Pa**	**°C**	**kg**	p. 416 f.
***4D 350** (1)	M4D 068-EC	Ⓐ	3~ 230/400 3~ 230/400	50 60	3340 3815	1420 1620	135 185	0.73/0.42 0.64/0.37	— —	64 68	120 145	-25 to +60 -25 to +45	3.6	C1)/C2)
***4E 350**	M4E 068-EC	Ⓑ	1~ 230 1~ 230	50 60	3250 3640	1365 1530	132 180	0.58 0.80	5.0 / 400 5.0 / 400	64 67	90 65	-25 to +60 -25 to +50	3.6	A1)
***6E 350**	M6E 068-DF	Ⓒ	1~ 230 1~ 230	50 60	2110 2420	905 1040	60 85	0.27 0.38	2.5 / 400 2.5 / 400	55 58	40 45	-25 to +60 -25 to +55	3.6	A1)

subject to alterations

(1) 230 VAC Δ / 400 VAC Y

Curves

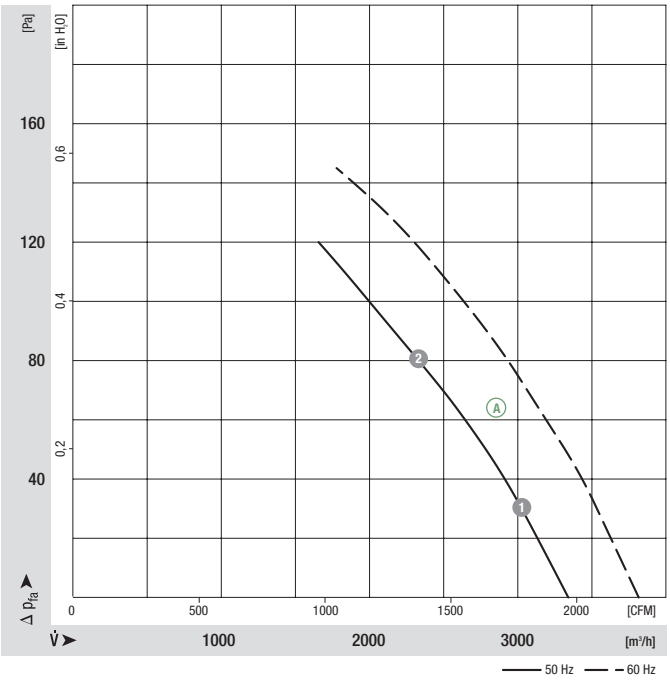

	n [rpm]	P_1 [W]	I [A]
Ⓐ ❶	1400	150	0.75/0.43
Ⓐ ❷	1380	173	0.75/0.43

Drawings
p. 50 f.

ebmpapst

- **Motor protection:** Ⓐ Without TOP, Ⓑ Ⓒ TOP wired internally
- **Cable exit:** Ⓐ Lateral, Ⓑ Ⓒ axial
- **Protection class:** I
- **Product conforming to standards:** EN 60335-1, Ⓑ Ⓒ also CE

Direction of air flow	❮ "V"/"A" ❯ Without attachments	❮ "V"/"A" ❯ With full round nozzle	❮ "V"/"A" ❯ With guard grille for full nozzle	❮ "V"/"A" ❯ With guard grille for short nozzle	❮ "V" In-line duct fan
"V"	A4D 350-AR06 -01	W4D 350-CR06 -30	S4D 350-BR06 -30	S4D 350-AR06 -30	W4D 350-IR06 -01
"A"	A4D 350-AR06 -02	W4D 350-CR06 -31	S4D 350-BR06 -31	S4D 350-AR06 -31	—
"V"	A4E 350-AR06 -01	W4E 350-CR06 -30	S4E 350-BR06 -30	S4E 350-AR06 -30	W4E 350-IR06 -01
"A"	A4E 350-AR06 -02	W4E 350-CR06 -31	S4E 350-BR06 -31	S4E 350-AR06 -31	—
"V"	A6E 350-AR08 -01	W6E 350-CR08 -30	S6E 350-BR08 -30	S6E 350-AR08 -30	—
"A"	A6E 350-AR08 -02	W6E 350-CR08 -31	S6E 350-BR08 -31	S6E 350-AR08 -31	—

Curves

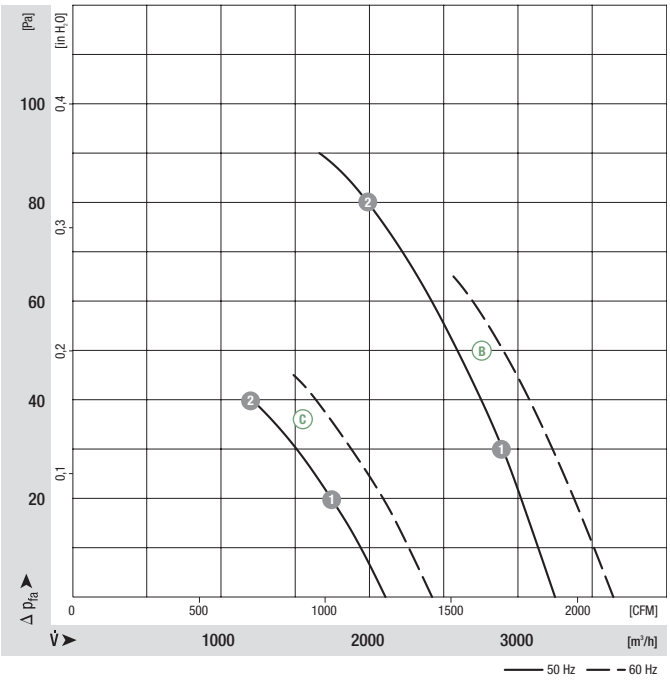

	n [rpm]	P_1 [W]	I [A]
Ⓑ ❶	1335	142	0.63
Ⓑ ❷	1260	166	0.74
Ⓒ ❶	880	63	0.28
Ⓒ ❷	825	68	0.30

AC axial fans

S series, Ø 350, drawings of directions of air flow "V" and "A"

Without attachments

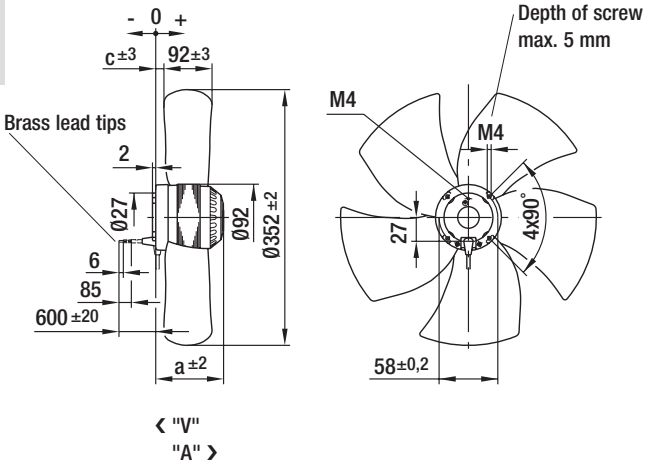

Type		a	c
A4D 350-AR06 -01	"V"	102.0	10.0
A4D 350-AR06 -02	"A"	102.0	-10.0
A4E 350-AR06 -01	"V"	102.0	10.0
A4E 350-AR06 -02	"A"	102.0	-10.0
A6E 350-AR08 -01	"V"	83.0	5.0
A6E 350-AR08 -02	"A"	83.0	-12.0

With full round nozzle

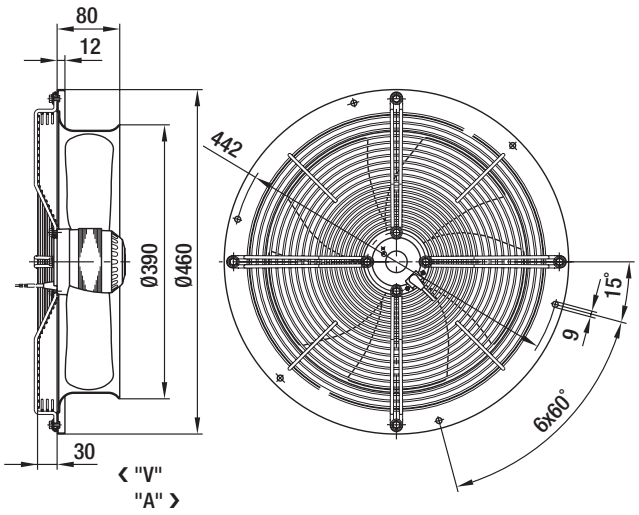

Type	
W4D 350-CR06 -30	"V"
W4D 350-CR06 -31	"A"
W4E 350-CR06 -30	"V"
W4E 350-CR06 -31	"A"
W6E 350-CR08 -30	"V"
W6E 350-CR08 -31	"A"

With guard grille for full nozzle

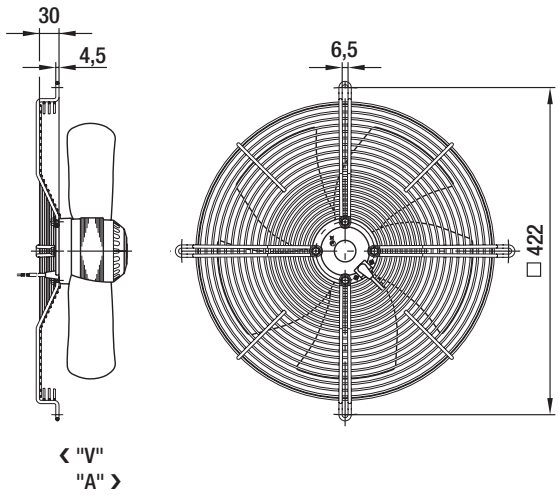

Type	
S4D 350-BR06 -30	"V"
S4D 350-BR06 -31	"A"
S4E 350-BR06 -30	"V"
S4E 350-BR06 -31	"A"
S6E 350-BR08 -30	"V"
S6E 350-BR08 -31	"A"

With guard grille for short nozzle

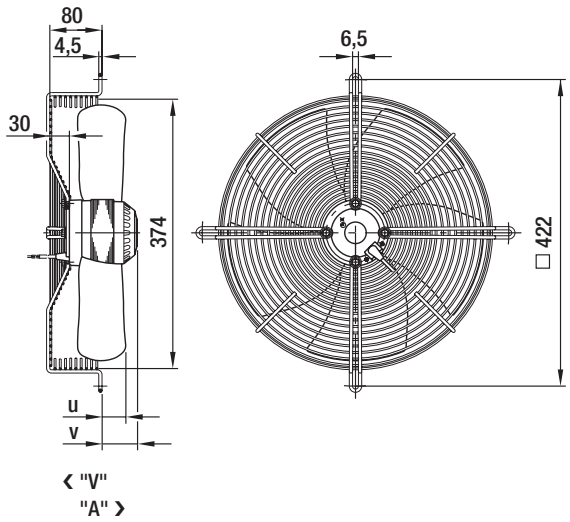

Type		u	v
S4D 350-AR06 -30	"V"	52.0	52.0
S4D 350-AR06 -31	"A"	32.0	52.0
S4E 350-AR06 -30	"V"	52.0	52.0
S4E 350-AR06 -31	"A"	32.0	52.0
S6E 350-AR08 -30	"V"	47.0	33.0
S6E 350-AR08 -31	"A"	30.0	33.0

In-line duct fan

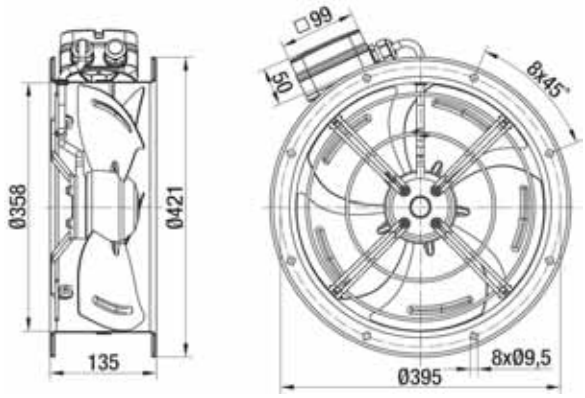

Type	
W4D 350-IR06 -01	"V"
W4E 350-IR06 -01	"V"

AC axial fans

S series, Ø 400

- **Material:** Guard grille: Steel, phosphated and coated in black plastic
  Wall ring: Sheet steel, pre-galvanised and coated in black plastic
  Blades: Sheet steel, coated in black
  Rotor: Coated in black
- **Number of blades:** 5
- **Direction of rotation:** Direction of air flow "V" counter-clockwise, direction of air flow "A" counter-clockwise, seen on rotor
- **Type of protection:** IP 44
- **Insulation class:** Ⓐ Ⓑ "B", Ⓒ "F"
- **Mounting position:** Shaft horizontal or rotor on bottom; rotor on top on request
- **Condensate discharges:** Rotor-side
- **Mode of operation:** Continuous operation (S1)
- **Bearings:** Maintenance-free ball bearings

Nominal data		Curve	Nominal voltage	Frequency	Air flow	Speed/rpm	Power input	Current draw	Capacitor	Sound pressure level	Max. operative range	Perm. amb. temp.	Mass without attachments	Electr. connection
Type	**Motor**		**VAC**	**Hz**	**m³/h**	**rpm**	**W**	**A**	**µF/VDB**	**dB(A)**	**Pa**	**°C**	**kg**	p. 416 f.
***4D 400** (1)(2)	M4D 074-EI	Ⓐ	3~ 230/400 3~ 230/400	50 60	4000 4610	1450 1690	135 185	0.76/0.44 0.68/0.39	— —	68 72	150 120	-25 to +40 -25 to +40	4.2	C1)/C2)
***4E 400**	M4E 074-EI	Ⓑ	1~ 230 1~ 230	50 60	4235 4950	1430 1700	160 240	0.73 1.06	6.0 / 400 6.0 / 400	69 73	150 75	-25 to +40 -25 to +40	4.2	A1)
***6E 400**	M6E 074-DF	Ⓒ	1~ 230 1~ 230	50 60	3290 3780	940 1080	120 170	0.55 0.75	3.0 / 450 3.0 / 400	59 62	50 40	-25 to +40 -25 to +60	4.0	A1)

subject to alterations (1) 400 VAC Δ/Y for two speed steps available on request (2) 230 VAC Δ / 400 VAC Y

Curves

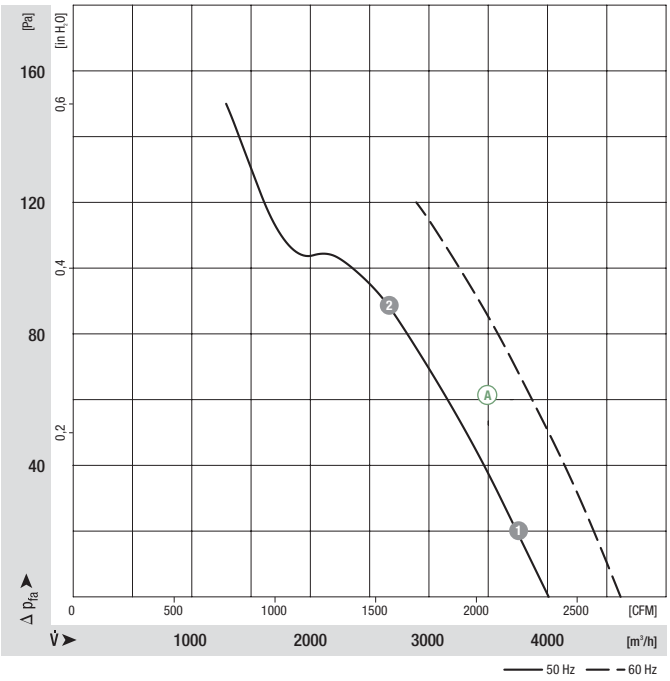

	n [rpm]	P_1 [W]	I [A]
Ⓐ ❶	1440	152	0.82/0.47
Ⓐ ❷	1415	195	0.86/0.50

Drawings
p. 54 f.

ebmpapst

- **Motor protection:** Ⓐ Without TOP, Ⓑ Ⓒ TOP wired internally
- **Cable exit:** Variable
- **Protection class:** I
- **Product conforming to standards:** EN 60335-1, Ⓑ Ⓒ also CE
- **Approvals:** CCC
- **Options:** Terminal box

Direction of air flow	❮ "V"/"A" ❯ Without attachments	❮ "V"/"A" ❯ With full round nozzle	❮ "V"/"A" ❯ With guard grille for full nozzle	❮ "V"/"A" ❯ With guard grille for short nozzle	❮ "V" In-line duct fan
"V"	A4D 400-AP12 -01	W4D 400-CP12 -30	S4D 400-BP12 -30	S4D 400-AP12 -03	W4D 400-IP12 -01
"A"	A4D 400-AP12 -02	W4D 400-CP12 -31	S4D 400-BP12 -31	S4D 400-AP12 -04	—
"V"	A4E 400-AP02 -01	W4E 400-CP02 -30	S4E 400-BP02 -30	S4E 400-AP02 -03	W4E 400-IP02 -01
"A"	A4E 400-AP02 -02	W4E 400-CP02 -31	S4E 400-BP02 -31	S4E 400-AP02 -04	—
"V"	A6E 400-AP10 -01	W6E 400-CP10 -30	S6E 400-BP10 -30	S6E 400-AP10 -30	—
"A"	A6E 400-AP10 -02	W6E 400-CP10 -31	S6E 400-BP10 -31	S6E 400-AP10 -31	—

Curves

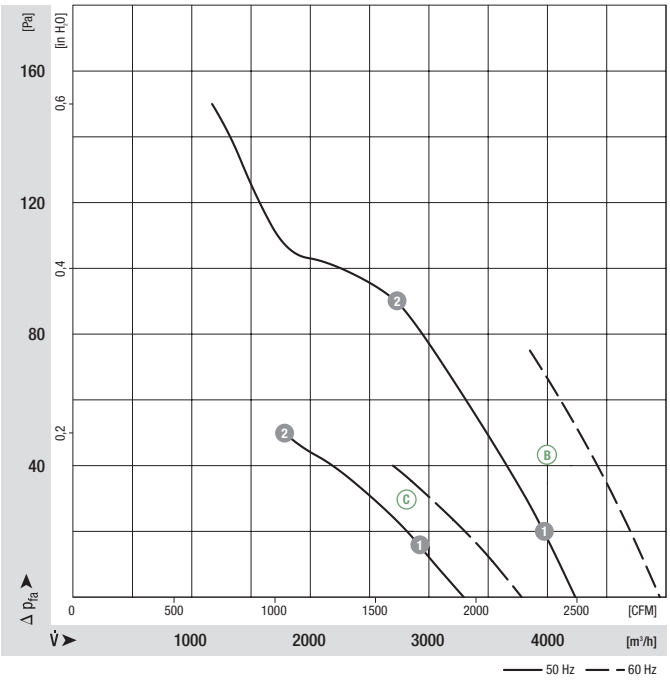

	n [rpm]	P_1 [W]	I [A]
Ⓑ ❶	1430	172	0.78
Ⓑ ❷	1395	210	0.93
Ⓒ ❶	935	126	0.57
Ⓒ ❷	895	140	0.62

AC axial fans

S series, Ø 400, drawings of directions of air flow "V" and "A"

Without attachments

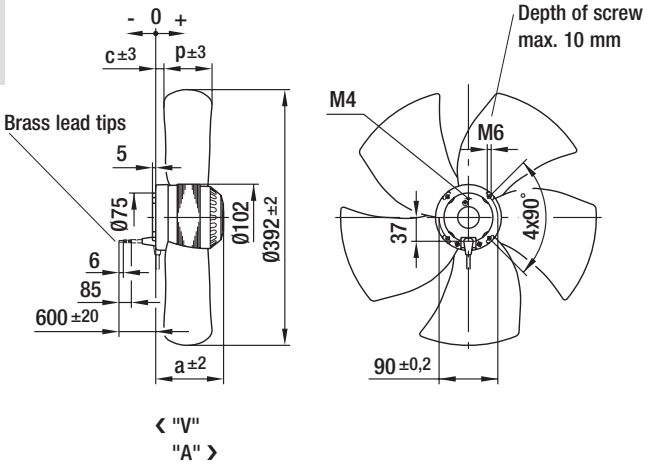

Type		a	c	p
A4D 400-AP12 -01	"V"	117.0	26.0	68.0
A4D 400-AP12 -02	"A"	117.0	22.0	68.0
A4E 400-AP02 -01	"V"	117.0	26.0	68.0
A4E 400-AP02 -02	"A"	117.0	22.0	68.0
A6E 400-AP10 -01	"V"	104.0	-5.0	90.0
A6E 400-AP10 -02	"A"	104.0	14.0	88.0

With full round nozzle

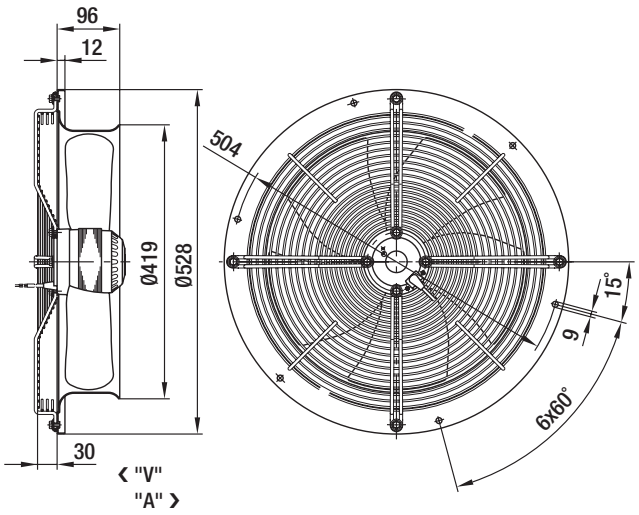

Type	
W4D 400-CP12 -30	"V"
W4D 400-CP12 -31	"A"
W4E 400-CP02 -30	"V"
W4E 400-CP02 -31	"A"
W6E 400-CP10 -30	"V"
W6E 400-CP10 -31	"A"

With guard grille for full nozzle

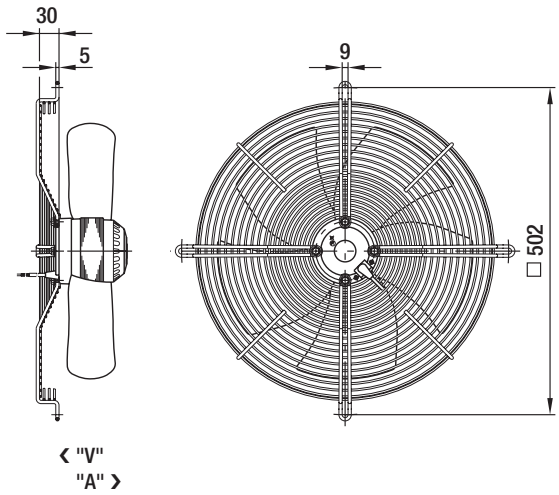

Type	
S4D 400-BP12 -30	"V"
S4D 400-BP12 -31	"A"
S4E 400-BP02 -30	"V"
S4E 400-BP02 -31	"A"
S6E 400-BP10 -30	"V"
S6E 400-BP10 -31	"A"

ebmpapst

With guard grille for short nozzle

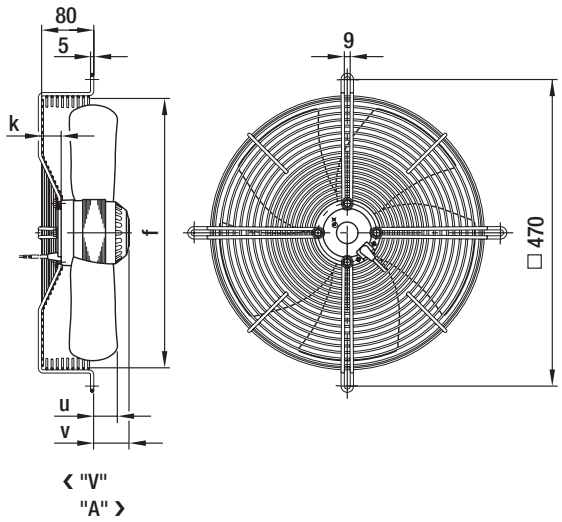

Type		f	k	u	v
S4D 400-AP12 -03	"V"	420.0	10.0	24.0	47.0
S4D 400-AP12 -04	"A"	420.0	10.0	20.0	47.0
S4E 400-AP02 -03	"V"	420.0	10.0	24.0	47.0
S4E 400-AP02 -04	"A"	420.0	10.0	20.0	47.0
S6E 400-AP10 -30	"V"	414.0	30.0	35.0	54.0
S6E 400-AP10 -31	"A"	414.0	30.0	52.0	54.0

In-line duct fan

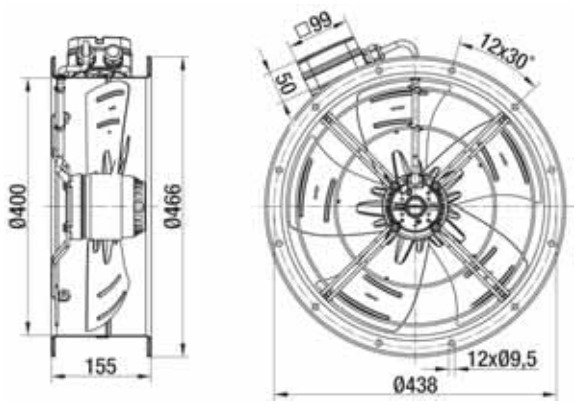

Type	
W4D 400-IP12 -01	"V"
W4E 400-IP02 -01	"V"

- **Technical features:**
  - PFC (passive)
  - Control input 0-10 VDC / PWM
  - Output 10 VDC max. 1.1 mA
  - Tach output
  - Over-temperature protected electronics / motor
- **EMC:** Interference emission acc. to EN 61000-6-3
  Interference immunity acc. to EN 61000-6-2
  Harmonics acc. to EN 61000-3-2/3
- **Leakage current:** < 3.5 mA acc. to EN 60950-1
- **Cable exit:** Variable
- **Protection class:** I
- **Product conforming to standards:** EN 60335-1, EN 61800-5-1, EN 60950-1, CE
- **Approvals:** VDE, UL, CSA, CCC, GOST are applied for

Direction of air flow

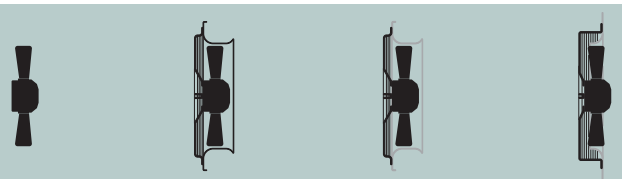

	❮ "V"/"A" ❯ Without attachments	❮ "V"/"A" ❯ With full round nozzle	❮ "V"/"A" ❯ With guard grille for full nozzle	❮ "V"/"A" ❯ With guard grille for short nozzle
"V"	A3G 300-AB77 -01	W3G 300-CB77 -01	S3G 300-BB77 -01	S3G 300-AB77 -01
"A"	A3G 300-AB77 -02	W3G 300-CB77 -02	S3G 300-BB77 -02	S3G 300-AB77 -02
"V"	A3G 300-AB56 -01	W3G 300-CB56 -01	S3G 300-BB56 -01	S3G 300-AB56 -01
"A"	A3G 300-AB56 -02	W3G 300-CB56 -02	S3G 300-BB56 -02	S3G 300-AB56 -02

Curves

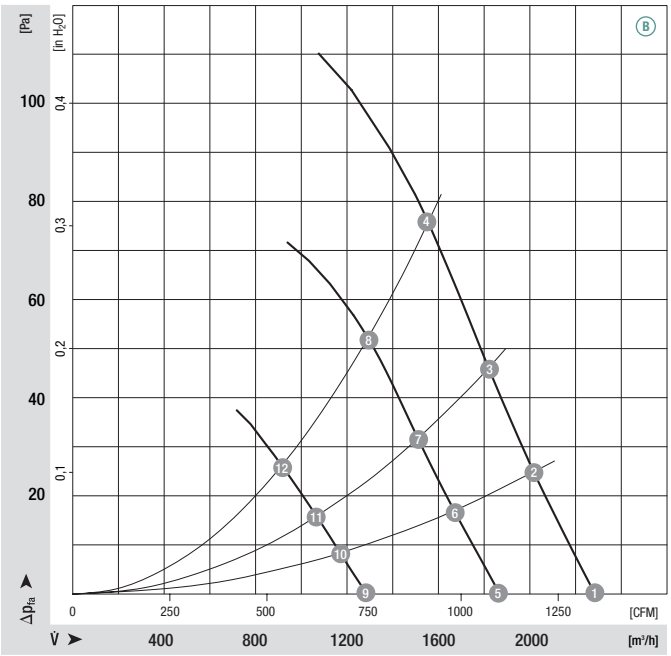

	n [rpm]	P_1 [W]	I [A]	Lp_A [dB(A)]	η_{tL} [%]
B 1	1710	76	0.60	62	—
B 2	1680	81	0.60	62	64
B 3	1670	85	0.60	62	66
B 4	1650	89	0.70	60	69
B 5	1410	49	0.40	56	—
B 6	1390	52	0.40	57	57
B 7	1345	54	0.50	56	61
B 8	1375	57	0.50	55	61
B 9	1000	21	0.20	47	—
B 10	990	22	0.20	48	54
B 11	990	23	0.20	46	58
B 12	980	24	0.20	45	60

EC axial fans mains-powered

S series, Ø 300, drawings of directions of air flow "V" and "A"

Without attachments

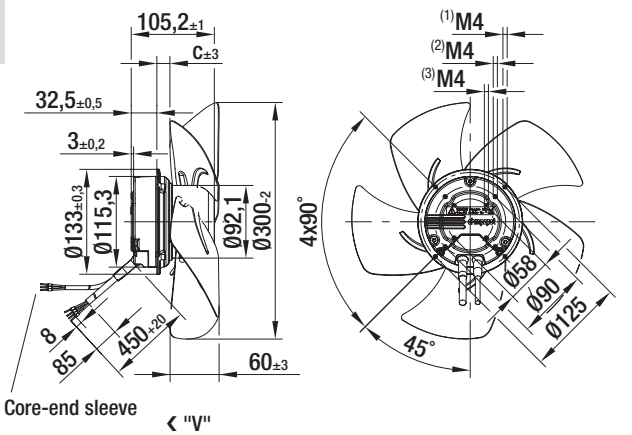

(1) Depth of screw max. 8 mm (pilot hole for self-tapping thread)
(2) Depth of screw max. 6 mm (pilot hole for self-tapping thread)
(3) Depth of screw 8-10 mm

Type		c
A3G 300-AB77 -01	"V"	16.5
A3G 300-AB77 -02	"A"	16.0
A3G 300-AB56 -01	"V"	16.5
A3G 300-AB56 -02	"A"	16.0

With full round nozzle

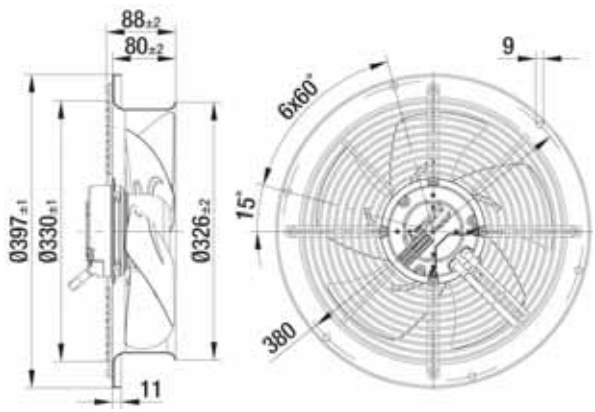

Type	
W3G 300-CB77 -01	"V"
W3G 300-CB77 -02	"A"
W3G 300-CB56 -01	"V"
W3G 300-CB56 -02	"A"

With guard grille for full nozzle

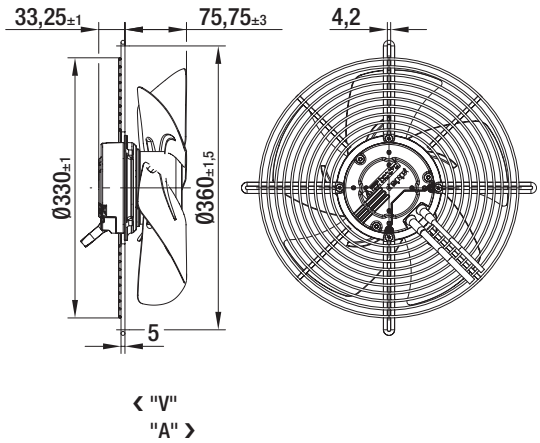

Type	
S3G 300-BB77 -01	"V"
S3G 300-BB77 -02	"A"
S3G 300-BB56 -01	"V"
S3G 300-BB56 -02	"A"

With guard grille for short nozzle

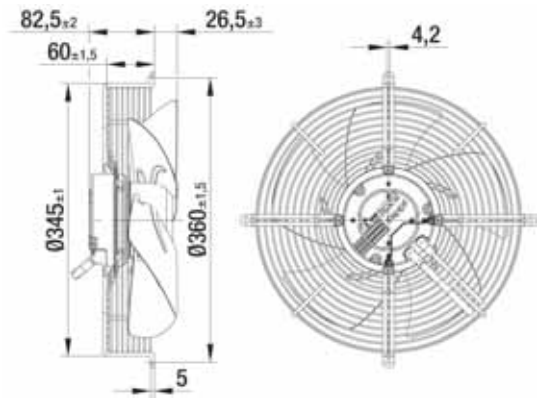

‹ "V"
"A" ›

Type	
S3G 300-AB77 -01	"V"
S3G 300-AB77 -02	"A"
S3G 300-AB56 -01	"V"
S3G 300-AB56 -02	"A"

EC axial fans mains-powered

S series, Ø 315

- **Material:** Guard grille: Steel, phosphated and coated in black plastic
  Wall ring: Sheet steel, pre-galvanised and coated in black
  Blades: Sheet steel, coated in black
  Rotor: Coated in black
  Electronics enclosure: Die-cast aluminium, coated in black
- **Number of blades:** 5
- **Direction of rotation:** Dir. of air flow "V" counter-clockwise, "A" clockwise, seen on rotor
- **Type of protection:** IP 44
- **Insulation class:** "B"
- **Mounting position:** Shaft horizontal or rotor on bottom (rotor on top on request)
- **Condensate discharges:** Rotor-side
- **Mode of operation:** Continuous operation (S1)
- **Bearings:** Maintenance-free ball bearings

Nominal data

Type	Motor	Curve	Nominal voltage range	Frequency	Speed/rpm	Max. power input (1)	Max. current draw (1)	Max. operative range	Perm. amb. temp.	Mass without attachments	Electr. connection
			VAC	Hz	rpm	W	A	Pa	°C	kg	p. 423
*3G 315	M3G 074-CF	A	1~ 100-130	50/60	1670	160	2.10	110	-25 to +60	2.9	J1)
*3G 315	M3G 074-CF	B	1~ 200-277	50/60	1660	170	1.30	130	-25 to +60	2.9	J1)

subject to alterations

(1) Nominal data in operating point with maximum load and 115 or 230 VAC

Curves

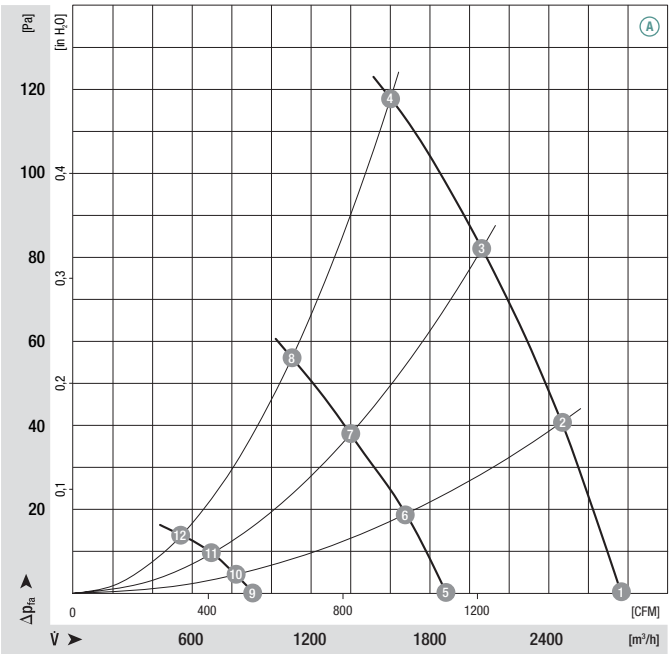

	n [rpm]	P_1 [W]	I [A]	Lp_A [dB(A)]	η_{tL} [%]
A 1	1670	109	1.40	63	—
A 2	1660	118	1.50	62	53
A 3	1630	126	1.60	62	60
A 4	1610	138	1.80	60	55
A 5	1130	38	0.60	53	—
A 6	1120	42	0.60	52	48
A 7	1120	45	0.60	52	54
A 8	1110	49	0.70	50	50
A 9	560	8	0.10	32	—
A 10	560	9	0.20	31	25
A 11	560	9	0.20	31	33
A 12	560	10	0.20	29	30

ebmpapst

- **Technical features:**
  - PFC (passive)
  - Control input 0-10 VDC / PWM
  - Output 10 VDC max. 1.1 mA
  - Tach output
  - Over-temperature protected electronics / motor
- **EMC:** Interference emission acc. to EN 61000-6-3
  Interference immunity acc. to EN 61000-6-2
  Harmonics acc. to EN 61000-3-2/3
- **Leakage current:** < 3.5 mA acc. to EN 60950-1
- **Cable exit:** Variable
- **Protection class:** I
- **Product conforming to standards:** EN 60335-1, EN 61800-5-1, EN 60950-1, CE
- **Approvals:** VDE, UL, CSA, CCC, GOST are applied for

Direction of air flow

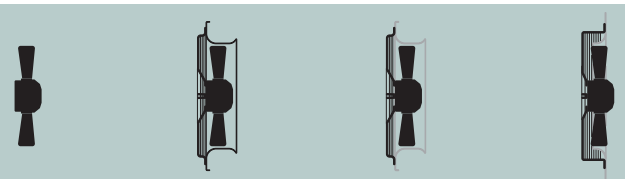

	❮ "V"/"A" ❯ Without attachments	❮ "V"/"A" ❯ With full round nozzle	❮ "V"/"A" ❯ With guard grille for full nozzle	❮ "V"/"A" ❯ With guard grille for short nozzle
"V"	A3G 315-AA76 -01	W3G 315-CA76 -01	S3G 315-BA76 -01	S3G 315-AA76 -01
"A"	A3G 315-AA76 -02	W3G 315-CA76 -02	S3G 315-BA76 -02	S3G 315-AA76 -02
"V"	A3G 315-AA58 -01	W3G 315-CA58 -01	S3G 315-BA58 -01	S3G 315-AA58 -01
"A"	A3G 315-AA58 -02	W3G 315-CA58 -02	S3G 315-BA58 -02	S3G 315-AA58 -02

Curves

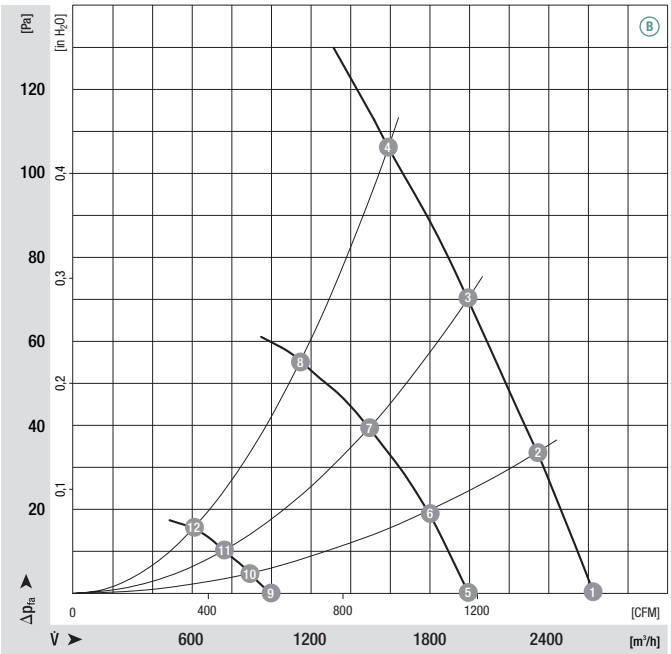

	n [rpm]	P_1 [W]	I [A]	Lp_A [dB(A)]	η_{tL} [%]
B 1	1660	110	0.80	62	—
B 2	1640	119	0.90	61	43
B 3	1625	125	0.90	62	52
B 4	1610	135	1.00	60	50
B 5	1250	50	1.00	55	—
B 6	1250	55	1.00	54	24
B 7	1220	55	1.00	54	40
B 8	1170	57	1.00	52	43
B 9	640	11	0.40	35	—
B 10	630	12	0.40	34	17
B 11	630	12	0.50	34	31
B 12	620	13	0.50	33	37

EC axial fans mains-powered

S series, Ø 315, drawings of directions of air flow "V" and "A"

Without attachments

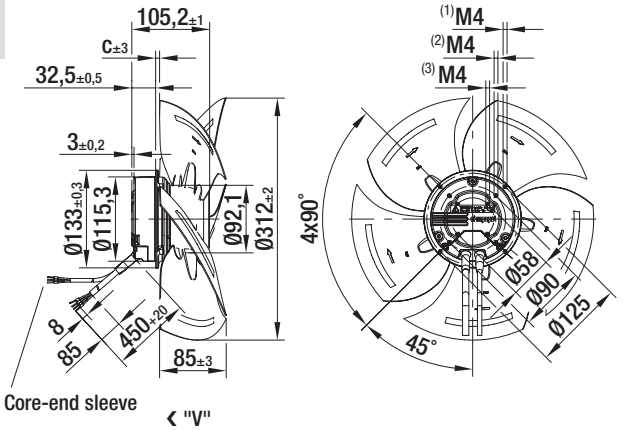

‹ "V"
"A" ›

(1) Depth of screw max. 8 mm (pilot hole for self-tapping thread)
(2) Depth of screw max. 6 mm (pilot hole for self-tapping thread)
(3) Depth of screw 8-10 mm

Type		c
A3G 315-AA76 -01	"V"	6.0
A3G 315-AA76 -02	"A"	-6.0
A3G 315-AA58 -01	"V"	6.0
A3G 315-AA58 -02	"A"	-6.0

With full round nozzle

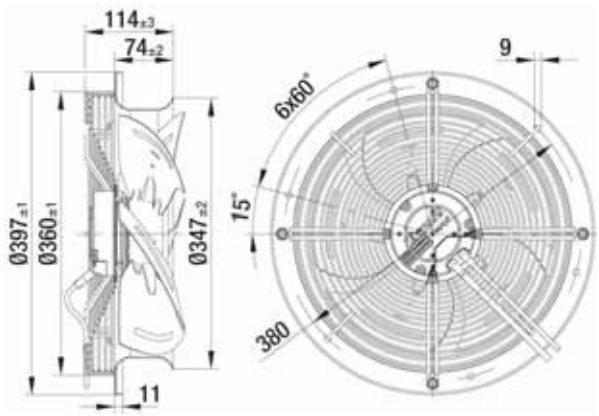

‹ "V"
"A" ›

Type	
W3G 315-CA76 -01	"V"
W3G 315-CA76 -02	"A"
W3G 315-CA58 -01	"V"
W3G 315-CA58 -02	"A"

With guard grille for full nozzle

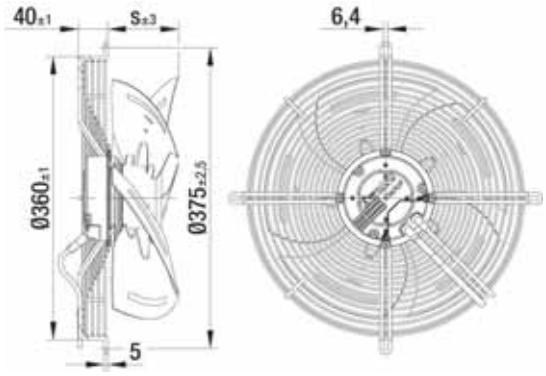

‹ "V"
"A" ›

Type		s
S3G 315-BA76 -01	"V"	91.0
S3G 315-BA76 -02	"A"	79.0
S3G 315-BA58 -01	"V"	91.0
S3G 315-BA58 -02	"A"	79.0

With guard grille for short nozzle

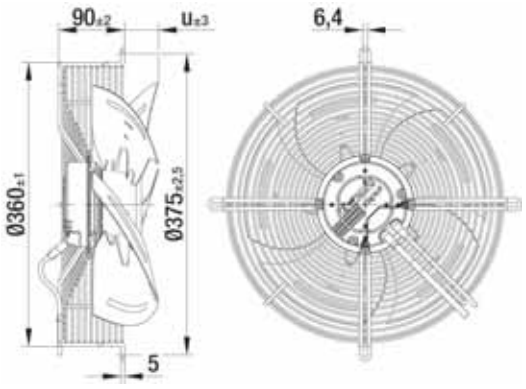

‹ "V"
"A" ›

Type		u
S3G 315-AA76 -01	"V"	41.0
S3G 315-AA76 -02	"A"	29.0
S3G 315-AA58 -01	"V"	41.0
S3G 315-AA58 -02	"A"	29.0

EC axial fans mains-powered

S series, Ø 330

- **Material:** Guard grille: Steel, phosphated and coated in black plastic
  Wall ring: Sheet steel, pre-galvanised and coated in black
  Blades: Sheet steel, coated in black
  Rotor: Coated in black
  Electronics enclosure: Die-cast aluminium, coated in black
- **Number of blades:** 5
- **Direction of rotation:** Dir. of air flow "V" counter-clockwise, "A" clockwise, seen on rotor
- **Type of protection:** IP 44
- **Insulation class:** "B"
- **Mounting position:** Shaft horizontal or rotor on bottom (rotor on top on request)
- **Condensate discharges:** Rotor-side
- **Mode of operation:** Continuous operation (S1)
- **Bearings:** Maintenance-free ball bearings

Nominal data

Type	Motor	Curve	Nominal voltage range	Frequency	Speed/rpm	Max. power input (1)	Max. current draw (1)	Max. operative range	Perm. amb. temp.	Mass without attachments	Electr. connection
			VAC	Hz	rpm	W	A	Pa	°C	kg	p. 423
*3G 330	M3G 074-CF	A	1~ 100-130	50/60	1660	170	2.20	120	-25 to +60	2.9	J1)
*3G 330	M3G 074-CF	B	1~ 200-277	50/60	1630	170	1.30	120	-25 to +60	2.9	J1)

subject to alterations

(1) Nominal data in operating point with maximum load and 115 or 230 VAC

Curves

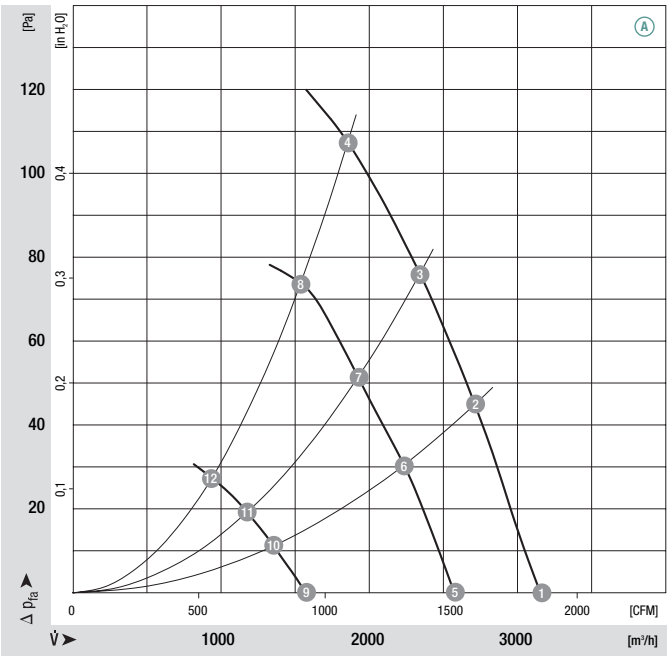

	n [rpm]	P_1 [W]	I [A]	Lp_A [dB(A)]	η_{tL} [%]
A 1	1660	131	1.70	68	—
A 2	1630	144	1.80	66	81
A 3	1610	147	1.90	64	78
A 4	1570	163	2.10	63	61
A 5	1350	72	1.00	64	—
A 6	1340	83	1.10	62	80
A 7	1330	87	1.20	60	74
A 8	1290	92	1.20	58	62
A 9	830	20	0.30	51	—
A 10	820	23	0.30	48	63
A 11	810	25	0.40	45	59
A 12	800	27	0.40	44	48

ebmpapst

- **Technical features:**
  - PFC (passive)
  - Control input 0-10 VDC / PWM
  - Output 10 VDC max. 1.1 mA
  - Tach output
  - Over-temperature protected electronics / motor
- **EMC:** Interference emission acc. to EN 61000-6-3
  Interference immunity acc. to EN 61000-6-2
  Harmonics acc. to EN 61000-3-2/3
- **Leakage current:** < 3.5 mA acc. to EN 60950-1
- **Cable exit:** Variable
- **Protection class:** I
- **Product conforming to standards:** EN 60335-1, EN 61800-5-1, EN 60950-1, CE
- **Approvals:** VDE, UL, CSA, CCC, GOST are applied for

Direction of air flow

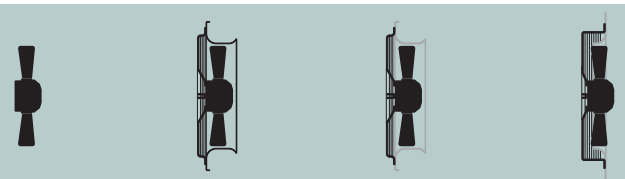

	❮ "V"/"A" ❯ Without attachments	❮ "V"/"A" ❯ With full round nozzle	❮ "V"/"A" ❯ With guard grille for full nozzle	❮ "V"/"A" ❯ With guard grille for short nozzle
"V"	A3G 330-AA76 -01	W3G 330-CA76 -01	S3G 330-BA76 -01	S3G 330-AA76 -01
"A"	A3G 330-AA76 -02	W3G 330-CA76 -02	S3G 330-BA76 -02	S3G 330-AA76 -02
"V"	A3G 330-AA58 -01	W3G 330-CA58 -01	S3G 330-BA58 -01	S3G 330-AA58 -01
"A"	A3G 330-AA58 -02	W3G 330-CA58 -02	S3G 330-BA58 -02	S3G 330-AA58 -02

Curves

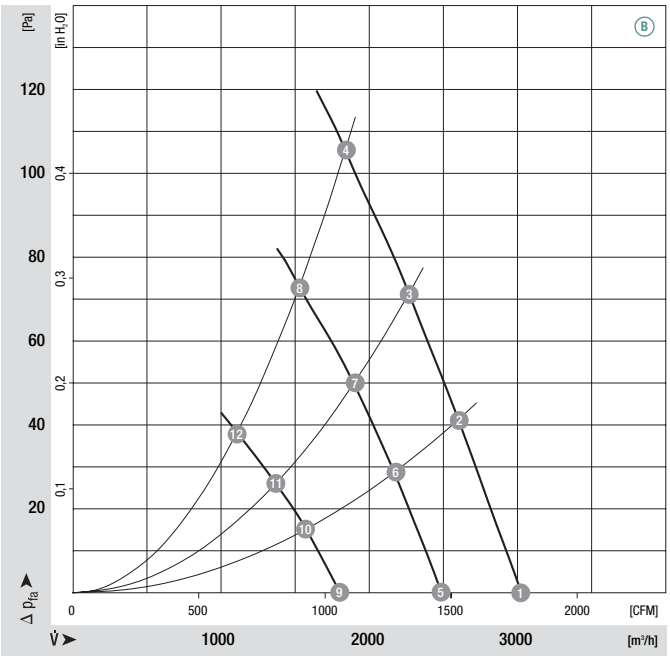

	n [rpm]	P_1 [W]	I [A]	Lp_A [dB(A)]	η_{tL} [%]
B 1	1630	130	0.95	68	—
B 2	1600	139	1.00	65	70
B 3	1590	146	1.10	64	67
B 4	1580	151	1.10	63	60
B 5	1350	76	0.60	63	—
B 6	1330	82	0.60	61	72
B 7	1330	86	0.65	60	69
B 8	1310	93	0.70	58	59
B 9	970	33	0.30	54	—
B 10	960	36	0.30	52	74
B 11	960	37	0.30	50	70
B 12	950	40	0.30	49	60

EC axial fans mains-powered

S series, Ø 330, drawings of directions of air flow "V" and "A"

Without attachments

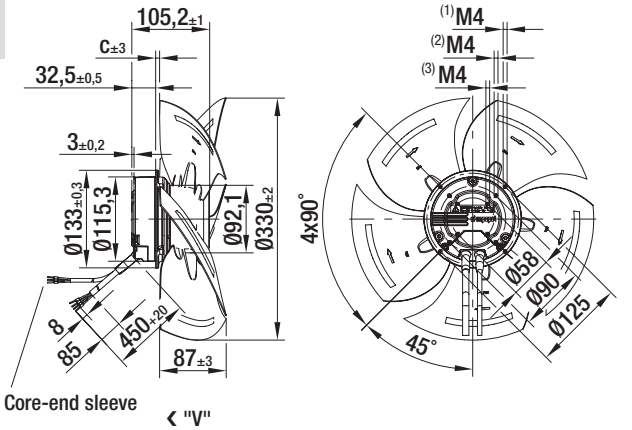

‹ "V"
"A" ›

(1) Depth of screw max. 8 mm (pilot hole for self-tapping thread)
(2) Depth of screw max. 6 mm (pilot hole for self-tapping thread)
(3) Depth of screw 8-10 mm

Type		c
A3G 330-AA76 -01	"V"	6.0
A3G 330-AA76 -02	"A"	-7.0
A3G 330-AA58 -01	"V"	6.0
A3G 330-AA58 -02	"A"	-7.0

With full round nozzle

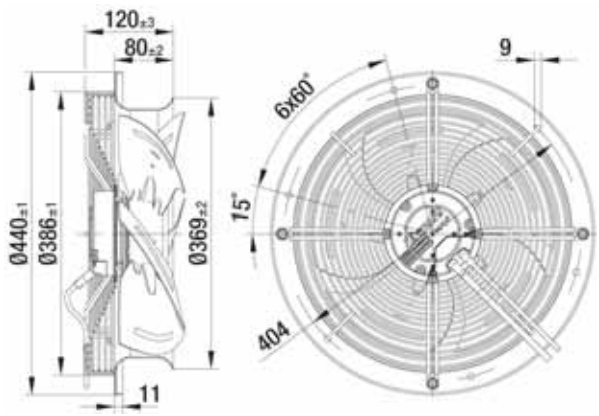

‹ "V"
"A" ›

Type	
W3G 330-CA76 -01	"V"
W3G 330-CA76 -02	"A"
W3G 330-CA58 -01	"V"
W3G 330-CA58 -02	"A"

With guard grille for full nozzle

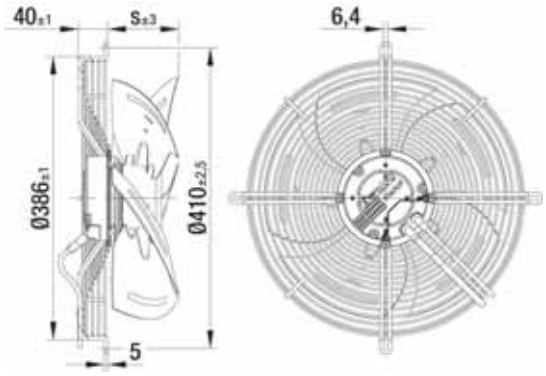

‹ "V"
"A" ›

Type		s
S3G 330-BA76 -01	"V"	93.0
S3G 330-BA76 -02	"A"	80.0
S3G 330-BA58 -01	"V"	93.0
S3G 330-BA58 -02	"A"	80.0

With guard grille for short nozzle

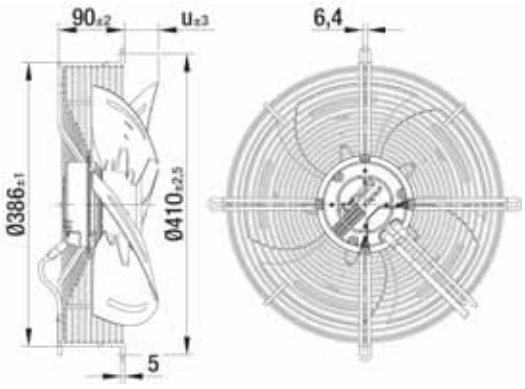

‹ "V"
"A" ›

Type		u
S3G 330-AA76 -01	"V"	43.0
S3G 330-AA76 -02	"A"	30.0
S3G 330-AA58 -01	"V"	43.0
S3G 330-AA58 -02	"A"	30.0

EC axial fans mains-powered

S series, Ø 350

- **Material:** Guard grille: Steel, phosphated and coated in black plastic
  Wall ring: Sheet steel, pre-galvanised and coated in black
  Blades: Sheet steel, coated in black
  Rotor: Coated in black
  Electronics enclosure: Die-cast aluminium, coated in black
- **Number of blades:** 5
- **Direction of rotation:** Dir. of air flow "V" counter-clockwise, "A" clockwise, seen on rotor
- **Type of protection:** IP 44
- **Insulation class:** "B"
- **Mounting position:** Shaft horizontal or rotor on bottom (rotor on top on request)
- **Condensate discharges:** Rotor-side
- **Mode of operation:** Continuous operation (S1)
- **Bearings:** Maintenance-free ball bearings

Nominal data

Type	Motor	Curve	Nominal voltage range	Frequency	Speed/rpm	Max. power input (1)	Max. current draw (1)	Max. operative range	Perm. amb. temp.	Mass without attachments	Electr. connection
			VAC	Hz	rpm	W	A	Pa	°C	kg	p. 423
*3G 350	M3G 074-CF	A	1~ 100-130	50/60	1600	170	2.20	100	-25 to +60	2.9	J1)
*3G 350	M3G 074-CF	B	1~ 200-277	50/60	1540	170	1.30	100	-25 to +60	2.9	J1)

subject to alterations

(1) Nominal data in operating point with maximum load and 115 or 230 VAC

Curves

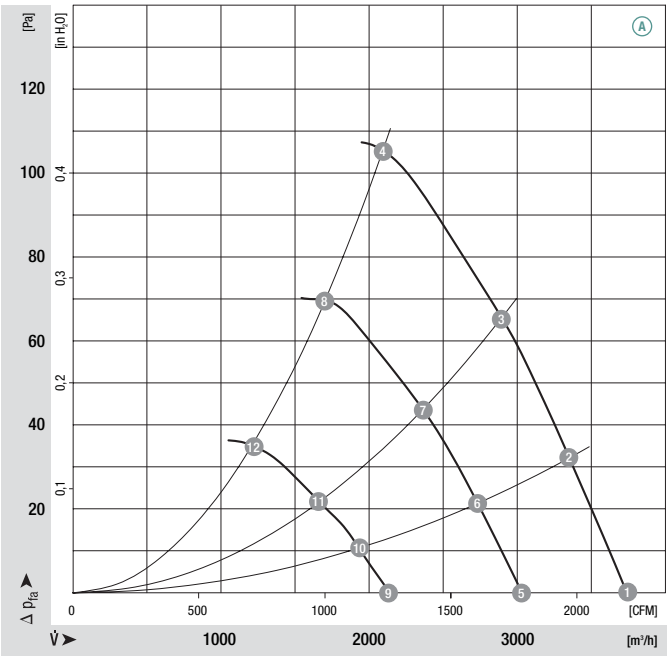

	n [rpm]	P_1 [W]	I [A]	Lp_A [dB(A)]	η_{tL} [%]
A 1	1600	165	2.10	66	—
A 2	1540	167	2.10	66	68
A 3	1490	167	2.10	64	72
A 4	1410	167	2.10	61	60
A 5	1300	91	1.20	62	—
A 6	1250	91	1.20	61	68
A 7	1210	92	1.20	59	70
A 8	1150	91	1.20	55	59
A 9	910	36	0.50	54	—
A 10	880	35	0.50	52	62
A 11	850	35	0.50	50	64
A 12	820	35	0.50	46	55

ebmpapst

- **Technical features:**
  - PFC (passive)
  - Control input 0-10 VDC / PWM
  - Output 10 VDC max. 1.1 mA
  - Tach output
  - Over-temperature protected electronics / motor
- **EMC:** Interference emission acc. to EN 61000-6-3
  Interference immunity acc. to EN 61000-6-2
  Harmonics acc. to EN 61000-3-2/3
- **Leakage current:** < 3.5 mA acc. to EN 60950-1
- **Cable exit:** Variable
- **Protection class:** I
- **Product conforming to standards:** EN 60335-1, EN 61800-5-1, EN 60950-1, CE
- **Approvals:** VDE, UL, CSA, CCC, GOST are applied for

Direction of air flow

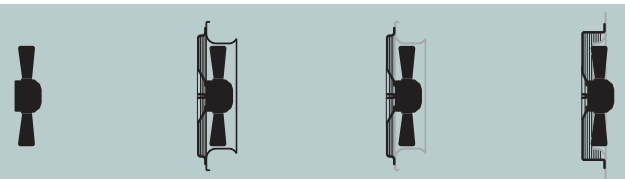

	❮ "V"/"A" ❯ Without attachments	❮ "V"/"A" ❯ With full round nozzle	❮ "V"/"A" ❯ With guard grille for full nozzle	❮ "V"/"A" ❯ With guard grille for short nozzle
"V"	A3G 350-AA76 -01	W3G 350-CA76 -01	S3G 350-BA76 -01	S3G 350-AA76 -01
"A"	A3G 350-AA76 -02	W3G 350-CA76 -02	S3G 350-BA76 -02	S3G 350-AA76 -02
"V"	A3G 350-AA58 -01	W3G 350-CA58 -01	S3G 350-BA58 -01	S3G 350-AA58 -01
"A"	A3G 350-AA58 -02	W3G 350-CA58 -02	S3G 350-BA58 -02	S3G 350-AA58 -02

Curves

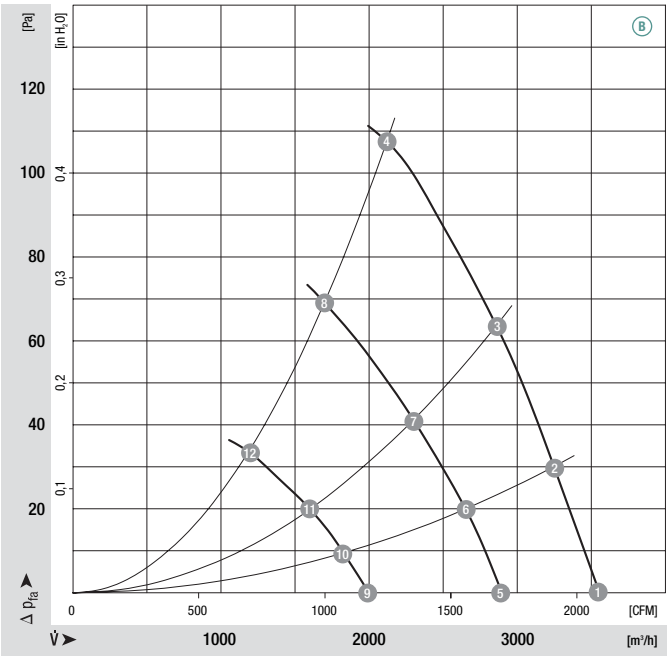

	n [rpm]	P_1 [W]	I [A]	Lp_A [dB(A)]	η_{tL} [%]
B 1	1540	150	1.20	67	—
B 2	1520	162	1.20	66	62
B 3	1490	168	1.30	64	66
B 4	1430	167	1.20	61	61
B 5	1260	87	0.70	61	—
B 6	1240	91	0.70	60	60
B 7	1200	90	0.70	58	64
B 8	1150	91	0.70	55	57
B 9	870	33	0.30	51	—
B 10	850	35	0.30	50	58
B 11	840	34	0.30	48	63
B 12	810	34	0.30	45	57

EC axial fans mains-powered

S series, Ø 350, drawings of directions of air flow "V" and "A"

Without attachments

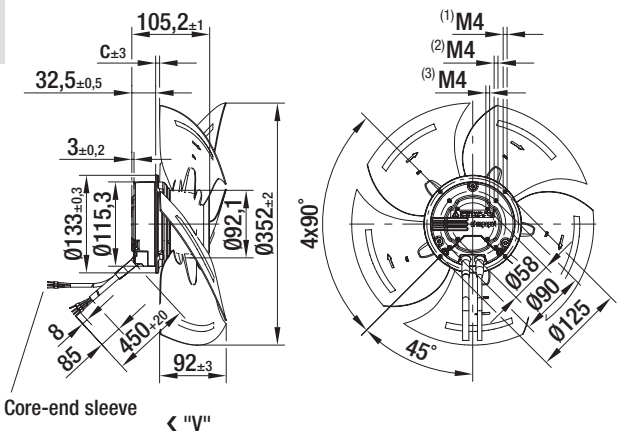

(1) Depth of screw max. 8 mm (pilot hole for self-tapping thread)
(2) Depth of screw max. 6 mm (pilot hole for self-tapping thread)
(3) Depth of screw 8-10 mm

Type		c
A3G 350-AA76 -01	"V"	7.0
A3G 350-AA76 -02	"A"	-12.0
A3G 350-AA58 -01	"V"	7.0
A3G 350-AA58 -02	"A"	-12.0

With full round nozzle

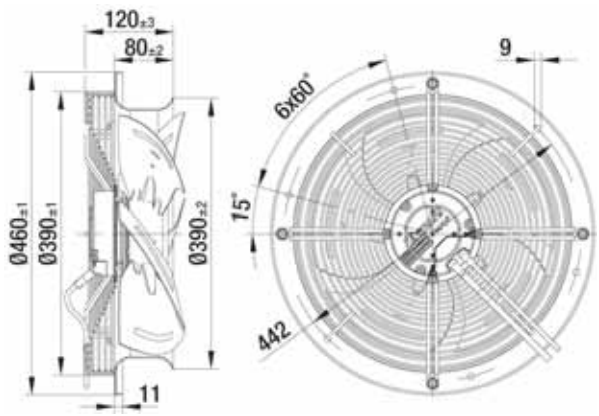

Type	
W3G 350-CA76 -01	"V"
W3G 350-CA76 -02	"A"
W3G 350-CA58 -01	"V"
W3G 350-CA58 -02	"A"

With guard grille for full nozzle

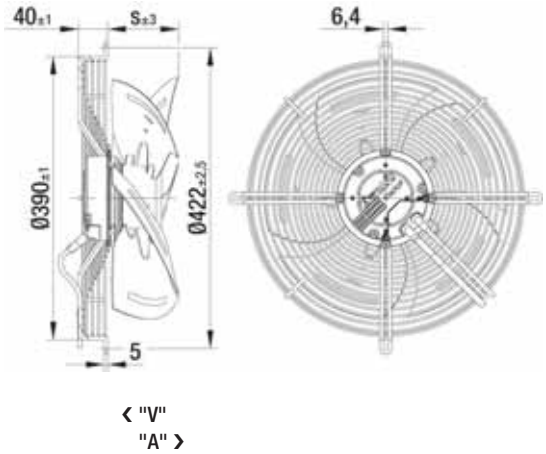

Type		s
S3G 350-BA76 -01	"V"	99.0
S3G 350-BA76 -02	"A"	80.0
S3G 350-BA58 -01	"V"	99.0
S3G 350-BA58 -02	"A"	80.0

With guard grille for short nozzle

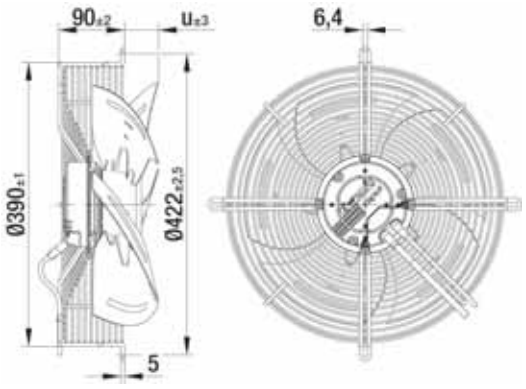

‹ "V"
"A" ›

Type		u
S3G 350-AA76 -01	"V"	49.0
S3G 350-AA76 -02	"A"	30.0
S3G 350-AA58 -01	"V"	49.0
S3G 350-AA58 -02	"A"	30.0

EC axial fans mains-powered

S series, Ø 400

- **Material:** Guard grille: Steel, phosphated and coated in black plastic
  Wall ring: Sheet steel, pre-galvanised and coated in black
  Blades: Sheet steel, coated in black
  Rotor: Coated in black
  Electronics enclosure: Die-cast aluminium, coated in black
- **Number of blades:** 5
- **Direction of rotation:** Dir. of air flow "V" counter-clockwise, "A" clockwise, seen on rotor
- **Type of protection:** IP 54
- **Insulation class:** "B"
- **Mounting position:** Shaft horizontal or rotor on bottom (rotor on top on request)
- **Condensate discharges:** Rotor-side
- **Mode of operation:** Continuous operation (S1)
- **Bearings:** Maintenance-free ball bearings

Nominal data

Type	Motor	Curve	Nominal voltage range	Frequency	Speed/rpm	Max. power input (1)	Max. current draw (1)	Max. operative range	Perm. amb. temp.	Mass without attachments	Electr. connection
			VAC	Hz	rpm	W	A	Pa	°C	kg	p. 425
*3G 400	M3G 084-FA	A	1~ 100-130	50/60	1620	350	4.20	165	-25 to +60	5.2	K1)
*3G 400	M3G 084-FA	B	1~ 200-277	50/60	1690	390	2.50	180	-25 to +60	5.2	K1)

subject to alterations

(1) Nominal data in operating point with maximum load and 115 or 230 VAC

Curves

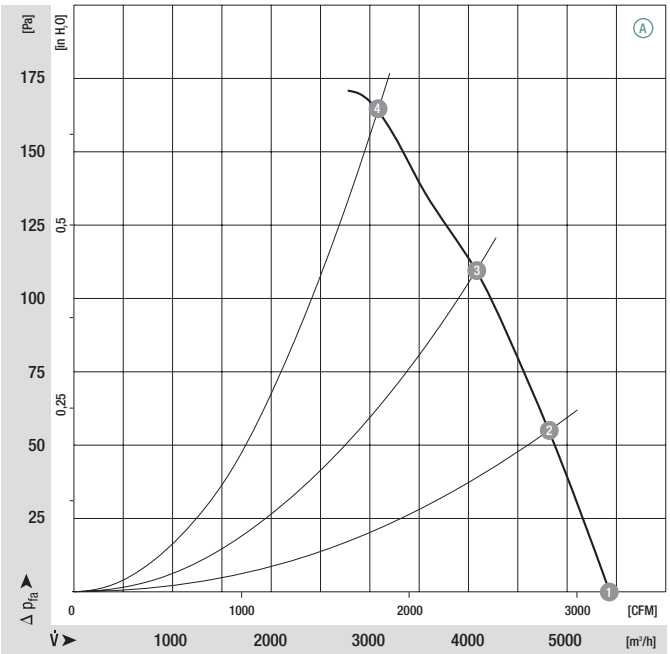

	n [rpm]	P_1 [W]	I [A]	Lp_A [dB(A)]	η_{tL} [%]
A 1	1620	310	3.80	69	—
A 2	1590	332	4.00	68	66
A 3	1565	349	4.20	68	62
A 4	1550	350	4.20	68	54

ebmpapst

- **Technical features:**
  - PFC (passive)
  - Control input 0-10 VDC / PWM
  - Output 10 VDC max. 1.1 mA
  - Alarm relay
  - Over-temperature protected electronics / motor
- **EMC:** Interference emission acc. to EN 61000-6-3
  Interference immunity acc. to EN 61000-6-2
  Harmonics acc. to EN 61000-3-2/3
- **Leakage current:** < 3.5 mA acc. to EN 61800-5-1
- **Cable exit:** Variable
- **Protection class:** I
- **Product conforming to standards:** EN 61800-5-1, CE
- **Approvals:** Ⓑ UL, CSA; Ⓐ Ⓑ VDE, CCC, GOST are applied for

Direction of air flow

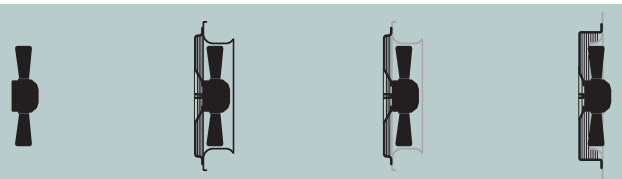

	❮ "V"/"A" ❯ Without attachments	❮ "V"/"A" ❯ With full round nozzle	❮ "V"/"A" ❯ With guard grille for full nozzle	❮ "V"/"A" ❯ With guard grille for short nozzle
"V"	A3G 400-AA37 -81	W3G 400-CA37 -81	S3G 400-KA37 -81	S3G 400-LA37 -81
"A"	A3G 400-AA37 -82	W3G 400-CA37 -82	S3G 400-KA37 -82	S3G 400-LA37 -82
"V"	A3G 400-AA22 -71	W3G 400-CA22 -71	S3G 400-KA22 -71	S3G 400-LA22 -71
"A"	A3G 400-AA22 -72	W3G 400-CA22 -72	S3G 400-KA22 -72	S3G 400-LA22 -72

Curves

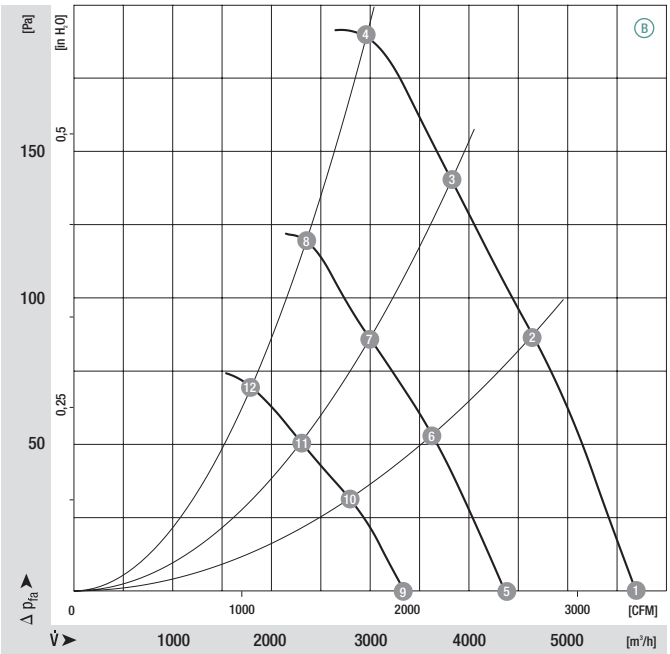

	n [rpm]	P_1 [W]	I [A]	Lp_A [dB(A)]	η_{tL} [%]
Ⓑ 1	1690	340	2.10	75	—
Ⓑ 2	1660	375	2.30	72	64
Ⓑ 3	1640	380	2.40	70	61
Ⓑ 4	1630	390	2.50	68	54
Ⓑ 5	1300	162	1.00	68	—
Ⓑ 6	1300	179	1.10	66	64
Ⓑ 7	1300	192	1.20	64	61
Ⓑ 8	1300	203	1.20	63	54
Ⓑ 9	1000	76	0.50	61	—
Ⓑ 10	1000	91	0.60	60	64
Ⓑ 11	1000	93	0.60	57	61
Ⓑ 12	1000	100	0.70	56	54

Drawings p. 220 f.
Guard grille p. 362 ff.
Wall ring p. 372 f.
Electr. connection p. 425

EC axial fans mains-powered

S series, Ø 400, drawings of directions of air flow "V" and "A"

Without attachments

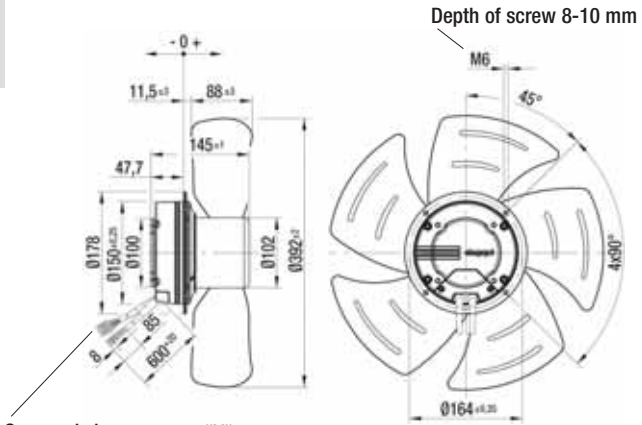

‹ "V"
"A" ›

Type	
A3G 400-AA37 -81	"V"
A3G 400-AA37 -82	"A"
A3G 400-AA22 -71	"V"
A3G 400-AA22 -72	"A"

With full round nozzle

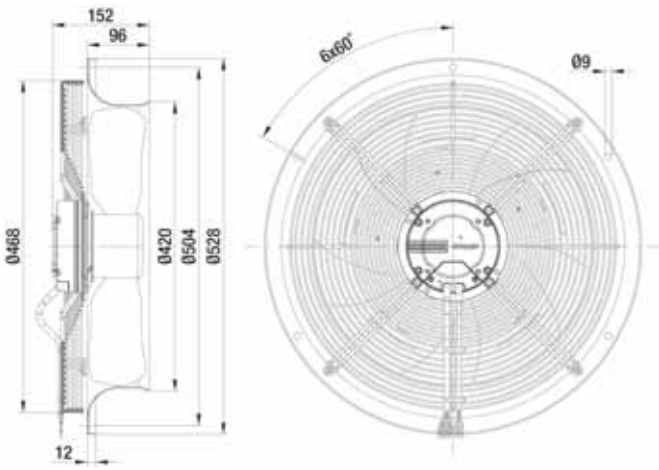

‹ "V"
"A" ›

Type	
W3G 400-CA37 -81	"V"
W3G 400-CA37 -82	"A"
W3G 400-CA22 -71	"V"
W3G 400-CA22 -72	"A"

With guard grille for full nozzle

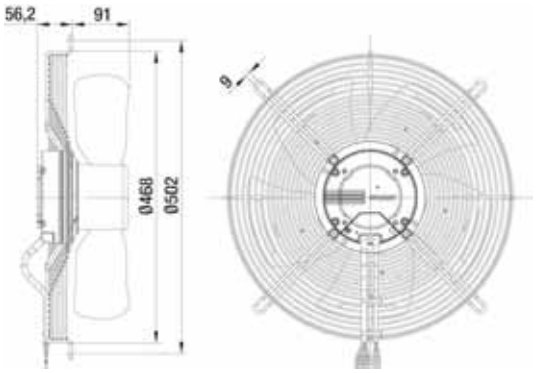

‹ "V"
"A" ›

Type	
S3G 400-KA37 -81	"V"
S3G 400-KA37 -82	"A"
S3G 400-KA22 -71	"V"
S3G 400-KA22 -72	"A"

With guard grille for short nozzle

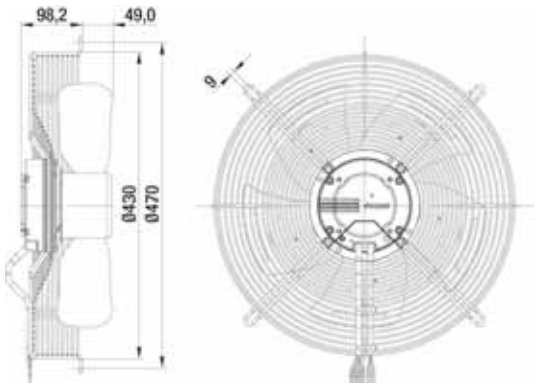

‹ "V"
"A" ›

Type	
S3G 400-LA37 -81	"V"
S3G 400-LA37 -82	"A"
S3G 400-LA22 -71	"V"
S3G 400-LA22 -72	"A"

EC axial fans mains-powered

S series, Ø 450

- **Material:** Guard grille: Steel, phosphated and coated in black plastic
  Wall ring: Sheet steel, pre-galvanised and coated in black
  Blades: Sheet steel, coated in black
  Rotor: Coated in black
  Electronics enclosure: Die-cast aluminium, coated in black
- **Number of blades:** 5
- **Direction of rotation:** Dir. of air flow "V" counter-clockwise, "A" clockwise, seen on rotor
- **Type of protection:** IP 54
- **Insulation class:** "B"
- **Mounting position:** Shaft horizontal or rotor on bottom (rotor on top on request)
- **Condensate discharges:** Rotor-side
- **Mode of operation:** Continuous operation (S1)
- **Bearings:** Maintenance-free ball bearings

Nominal data

Type	Motor	Curve	Nominal voltage range	Frequency	Speed/rpm	Max. power input (1)	Max. current draw (1)	Max. operative range	Perm. amb. temp.	Mass without attachments	Electr. connection
			VAC	Hz	rpm	W	A	Pa	°C	kg	p. 425
*3G 450	M3G 084-FA	A	1~ 100-130	50/60	1270	310	3.70	120	-25 to +60	5.5	K1)
*3G 450	M3G 084-FA	B	1~ 200-277	50/60	1310	325	2.10	120	-25 to +60	5.5	K1)

subject to alterations

(1) Nominal data in operating point with maximum load and 115 or 230 VAC

Curves

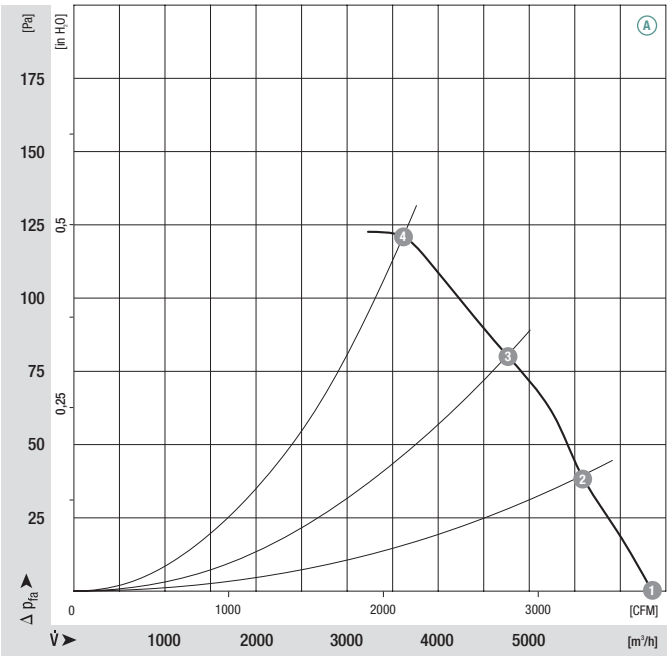

	n [rpm]	P_1 [W]	I [A]	Lp_A [dB(A)]	η_{tL} [%]
A 1	1270	267	3.30	69	—
A 2	1245	282	3.50	69	70
A 3	1230	300	3.70	67	66
A 4	1220	308	3.70	63	42

ebmpapst

- **Technical features:**
  - PFC (passive)
  - Control input 0-10 VDC / PWM
  - Output 10 VDC max. 1.1 mA
  - Alarm relay
  - Over-temperature protected electronics / motor
- **EMC:** Interference emission acc. to EN 61000-6-3
  Interference immunity acc. to EN 61000-6-2
  Harmonics acc. to EN 61000-3-2/3
- **Leakage current:** < 3.5 mA acc. to EN 61800-5-1
- **Cable exit:** Variable
- **Protection class:** I
- **Product conforming to standards:** EN 61800-5-1, CE
- **Approvals:** Ⓑ UL, CSA; Ⓐ Ⓑ VDE, CCC, GOST are applied for

Direction of air flow

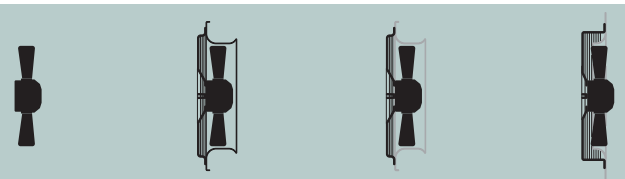

	❮ "V"/"A" ❯ Without attachments	❮ "V"/"A" ❯ With full round nozzle	❮ "V"/"A" ❯ With guard grille for full nozzle	❮ "V"/"A" ❯ With guard grille for short nozzle
"V"	A3G 450-AA40 -81	W3G 450-CA40 -81	S3G 450-KA40 -81	S3G 450-LA40 -81
"A"	A3G 450-AA40 -82	W3G 450-CA40 -82	S3G 450-KA40 -82	S3G 450-LA40 -82
"V"	A3G 450-AA14 -71	W3G 450-CA14 -71	S3G 450-KA14 -71	S3G 450-LA14 -71
"A"	A3G 450-AA14 -72	W3G 450-CA14 -72	S3G 450-KA14 -72	S3G 450-LA14 -72

Curves

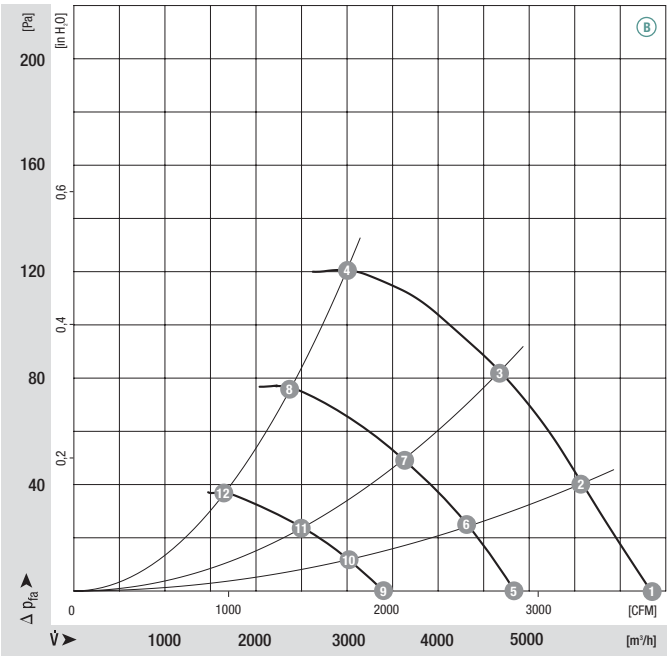

	n [rpm]	P_1 [W]	I [A]	Lp_A [dB(A)]	η_{tL} [%]
Ⓑ 1	1310	245	1.50	73	—
Ⓑ 2	1290	262	1.70	72	70
Ⓑ 3	1270	290	1.90	70	66
Ⓑ 4	1240	325	2.10	66	42
Ⓑ 5	1000	108	0.70	68	—
Ⓑ 6	1000	122	0.80	67	70
Ⓑ 7	1000	140	0.90	65	66
Ⓑ 8	1000	174	1.10	61	42
Ⓑ 9	700	38	0.30	61	—
Ⓑ 10	700	42	0.30	60	70
Ⓑ 11	700	48	0.30	58	66
Ⓑ 12	700	60	0.40	56	42

EC axial fans mains-powered

S series, Ø 450, drawings of directions of air flow "V" and "A"

Without attachments

Type	
A3G 450-AA40 -81	"V"
A3G 450-AA40 -82	"A"
A3G 450-AA14 -71	"V"
A3G 450-AA14 -72	"A"

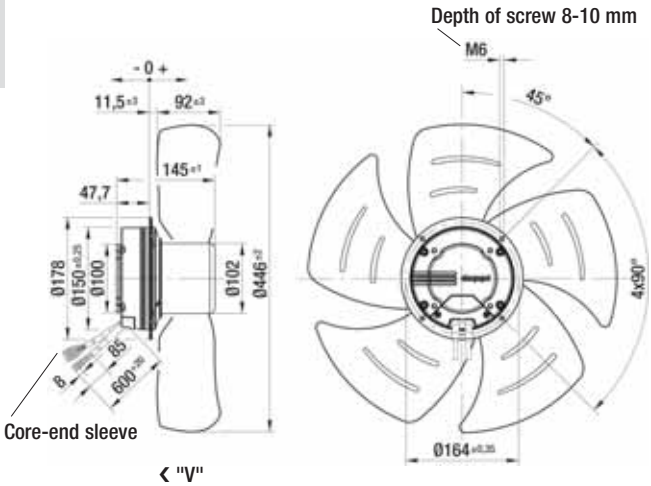

‹ "V"
"A" ›

With full round nozzle

Type	
W3G 450-CA40 -81	"V"
W3G 450-CA40 -82	"A"
W3G 450-CA14 -71	"V"
W3G 450-CA14 -72	"A"

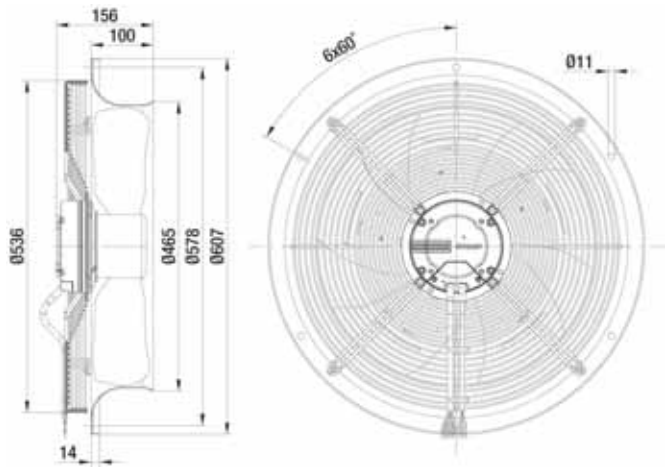

‹ "V"
"A" ›

With guard grille for full nozzle

Type	
S3G 450-KA40 -81	"V"
S3G 450-KA40 -82	"A"
S3G 450-KA14 -71	"V"
S3G 450-KA14 -72	"A"

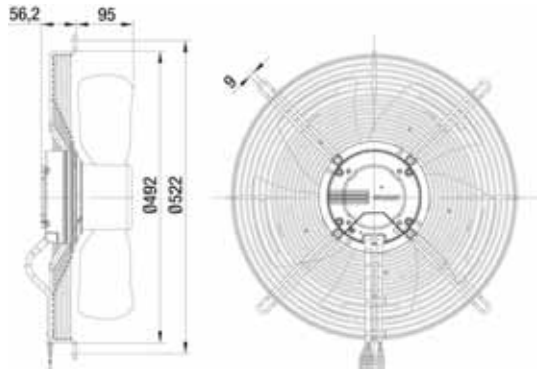

‹ "V"
"A" ›

ebmpapst

With guard grille for short nozzle

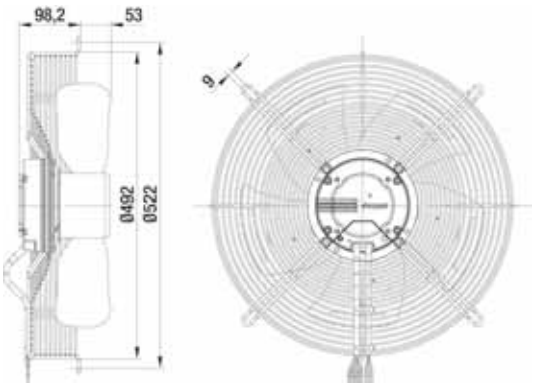

‹ "V"
"A" ›

Type	
S3G 450-LA40 -81	"V"
S3G 450-LA40 -82	"A"
S3G 450-LA14 -71	"V"
S3G 450-LA14 -72	"A"

EC axial fans mains-powered

S series, Ø 500

- **Material:** Guard grille: Steel, phosphated and coated in black plastic
  Wall ring: Sheet steel, pre-galvanised and coated in black plastic
  Blades: PA plastic
  Rotor: Cast-in with PA plastic
  Electronics enclosure: Die-cast aluminium, coated in black
- **Number of blades:** 5
- **Direction of rotation:** Counter-clockwise, seen on rotor
- **Type of protection:** IP 54 (acc. to EN 60529)
- **Insulation class:** "F"
- **Mounting position:** Shaft horizontal or rotor on bottom; rotor on top on request
- **Condensate discharges:** Rotor-side
- **Mode of operation:** Continuous operation (S1)
- **Bearings:** Maintenance-free ball bearings

Nominal data		Curve	Nominal voltage range	Frequency	Speed/rpm	Max. power input (1)	Max. current draw (1)	Max. operative range	Perm. amb. temp.	Electr. connection
Type	**Motor**		**VAC**	**Hz**	**rpm**	**kW**	**A**	**Pa**	**°C**	p. 427
***3G 500**	M3G 112-GA	A	1~ 200-277	50/60	1250	0.69	3.10	110	-25 to +60	L1)

subject to alterations

(1) Nominal data in operating point with maximum load and 230 VAC

Curves

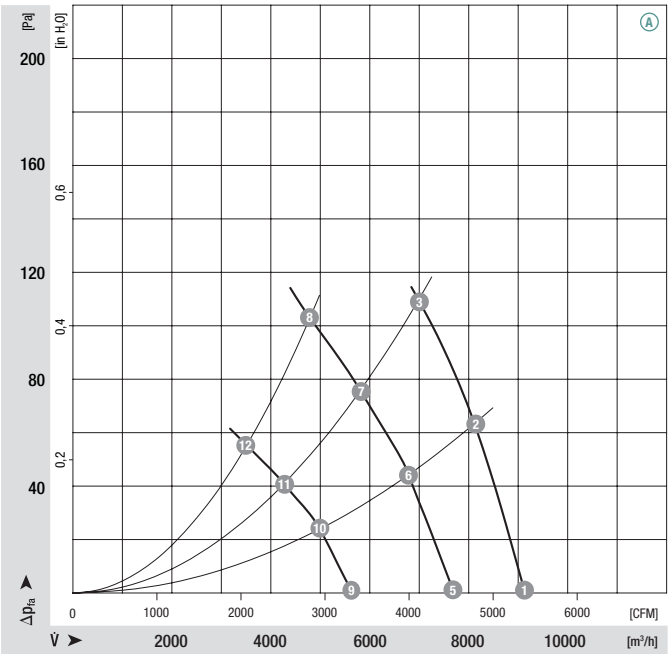

	n [rpm]	P_1 [kW]	I [A]	Lw_A [dB(A)]	η_{tL} [%]
A 1	1260	0.61	2.80	74	—
A 2	1260	0.67	3.00	76	62
A 3	1250	0.69	3.10	77	60
A 4	—	—	—	—	—
A 5	1020	0.41	1.90	80	—
A 6	1030	0.36	1.70	70	67
A 7	1020	0.37	1.70	71	67
A 8	1020	0.36	1.70	73	63
A 9	750	0.16	0.80	70	—
A 10	740	0.15	0.70	62	73
A 11	740	0.15	0.70	62	72
A 12	740	0.15	0.70	63	68

ebmpapst

- **Technical features:**
  - PFC (active)
  - Integrated PID controller
  - Control input 0-10 VDC / PWM
  - Input for sensor 0-10 V or 4-20 mA
  - Slave output 0-10 V max. 3 mA
  - Output 20 VDC (±20 %) max. 50 mA
  - Output 10 VDC (+10 %) max. 10 mA
  - RS485 ebmBUS
  - Alarm relay
  - Line undervoltage detection
  - Motor current limitation
  - Over-temperature protected electronics / motor
  - Locked rotor protection
  - Soft start
- **EMC:** Interference emission acc. to EN 61000-6-4 (industrial environment)
  Interference immunity acc. to EN 61000-6-2 (industrial environment)
  Harmonics acc. to DIN EN 61000-3-2/3
- **Leakage current:** < 3.5 mA acc. to EN 61800-5-1
- **Connection leads:** Via terminal strip
- **Protection class:** I (acc. to EN 61800-5-1)
- **Product conforming to standard:** CE
- **Approvals:** VDE, UL, CSA, GOST; CCC is applied for

Direction of air flow	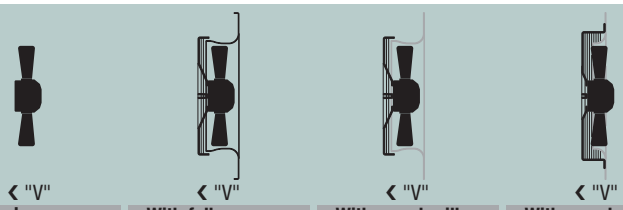			
	❮ "V"	❮ "V"	❮ "V"	❮ "V"
	Without attachments	**With full square nozzle**	**With guard grille for full nozzle**	**With guard grille for short nozzle**
"V"	A3G 500-AE33 -11	W3G 500-CE33 -11	S3G 500-BE33 -11	S3G 500-AE33 -11

EC axial fans mains-powered

S series, Ø 500

- **Material:** Guard grille: Steel, phosphated and coated in black plastic
  Wall ring: Sheet steel, pre-galvanised and coated in black plastic
  Blades: PA plastic
  Rotor: Cast-in with PA plastic
  Electronics enclosure: Die-cast aluminium, coated in black
- **Number of blades:** 5
- **Direction of rotation:** Counter-clockwise, seen on rotor
- **Type of protection:** IP 54 (acc. to EN 60529)
- **Insulation class:** "F"
- **Mounting position:** Shaft horizontal or rotor on bottom; rotor on top on request
- **Condensate discharges:** Rotor-side
- **Mode of operation:** Continuous operation (S1)
- **Bearings:** Maintenance-free ball bearings

Nominal data

Type	Motor	Curve	Nominal voltage range	Frequency	Speed/rpm	Max. power input (1)	Max. current draw (1)	Max. operative range	Perm. amb. temp.	Electr. connection
			VAC	Hz	rpm	kW	A	Pa	°C	p. 427
*3G 500	M3G 112-GA	A	3~ 200-240	50/60	1450	1.04	3.40	195	-25 to +60	L2)
*3G 500	M3G 112-GA	B	3~ 380-480	50/60	1450	1.04	1.70	195	-25 to +60	L2)

subject to alterations

(1) Nominal data in operating point with maximum load and 200 or 400 VAC

Curves

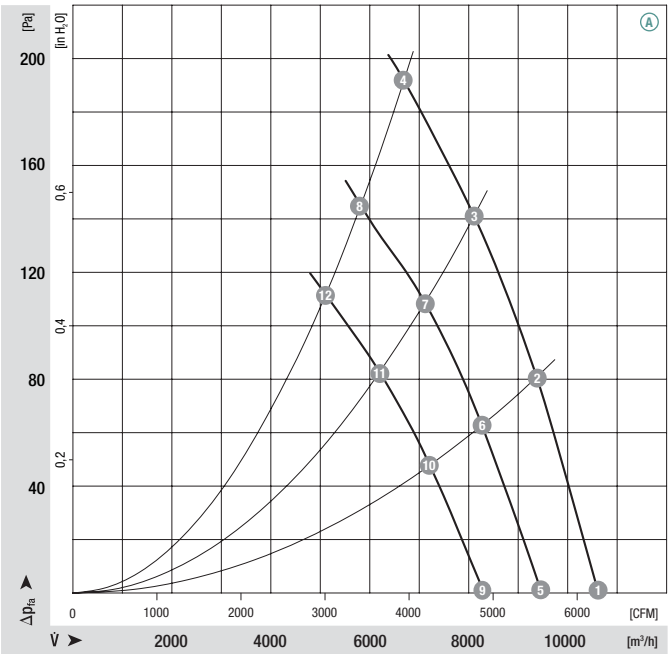

	n [rpm]	P_1 [kW]	I [A]	Lw_A [dB(A)]	η_{tL} [%]
A 1	1450	1.21	3.80	97	—
A 2	1450	1.00	3.20	79	77
A 3	1450	1.05	3.40	81	68
A 4	1450	1.04	3.40	82	60
A 5	1220	0.70	2.40	87	—
A 6	1270	0.66	2.20	76	81
A 7	1260	0.67	2.40	77	73
A 8	1260	0.66	2.20	79	62
A 9	1080	0.47	1.80	83	—
A 10	1110	0.44	1.80	73	81
A 11	1110	0.46	1.80	74	72
A 12	1100	0.45	1.80	75	63

ebmpapst

- **Technical features:**
  - PFC (passive)
  - Integrated PID controller
  - Control input 0-10 VDC / PWM
  - Input for sensor 0-10 V or 4-20 mA
  - Slave output 0-10 V max. 3 mA
  - Output 20 VDC (±20 %) max. 50 mA
  - Output 10 VDC (+10 %) max. 10 mA
  - RS485 ebmBUS
  - Alarm relay
  - Line undervoltage / phase failure detection
  - Motor current limitation
  - Over-temperature protected electronics / motor
  - Locked rotor protection
  - Soft start
- **EMC:** Interference emission acc. to EN 61000-6-3
  Interference immunity acc. to EN 61000-6-2
  Harmonics acc. to EN 61000-3-2/3
- **Leakage current:** < 3.5 mA acc. to EN 61800-5-1
- **Connection leads:** Via terminal strip
- **Protection class:** I (acc. to EN 61800-5-1)
- **Product conforming to standard:** CE
- **Approvals:** VDE, UL, CSA, GOST; CCC is applied for

Direction of air flow

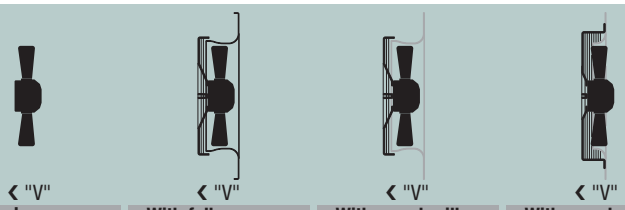

	Without attachments	With full square nozzle	With guard grille for full nozzle	With guard grille for short nozzle
"V"	A3G 500-AE38 -06	W3G 500-CE38 -06	S3G 500-BE38 -06	S3G 500-AE38 -06
"V"	A3G 500-AE33 -01	W3G 500-CE33 -01	S3G 500-BE33 -01	S3G 500-AE33 -01

Curves

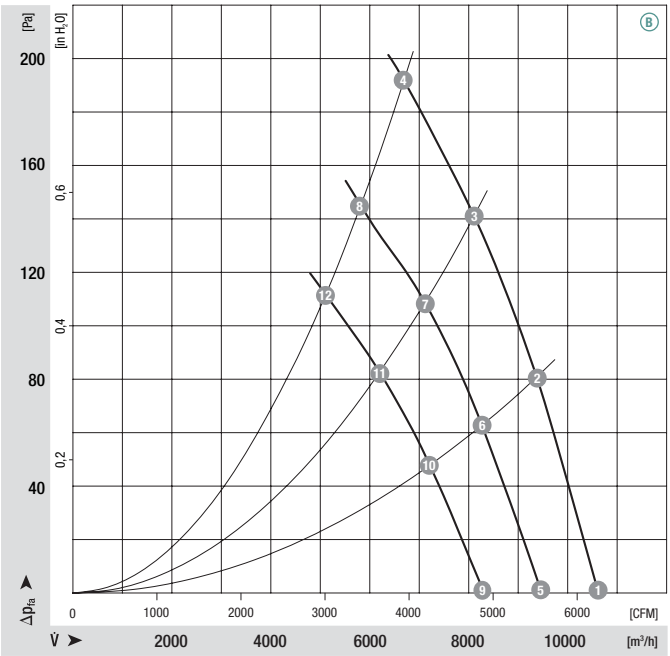

	n [rpm]	P_1 [kW]	I [A]	Lw_A [dB(A)]	η_{tL} [%]
B 1	1450	1.21	1.90	97	—
B 2	1450	1.00	1.60	79	77
B 3	1450	1.05	1.70	81	68
B 4	1450	1.04	1.70	82	60
B 5	1220	0.70	1.20	87	—
B 6	1270	0.66	1.10	76	81
B 7	1260	0.67	1.20	77	73
B 8	1260	0.66	1.10	79	62
B 9	1080	0.47	0.90	83	—
B 10	1110	0.44	0.90	73	81
B 11	1110	0.46	0.90	74	72
B 12	1100	0.45	0.90	75	63

Drawings p. 230 f.

Electr. connection p. 427

EC axial fans mains-powered

S series, Ø 500, drawings for direction of air flow "V"

Without attachments

Type	Mass [kg]
A3G 500-AE33 -11	8.7
A3G 500-AE38 -06	8.7
A3G 500-AE33 -01	8.7

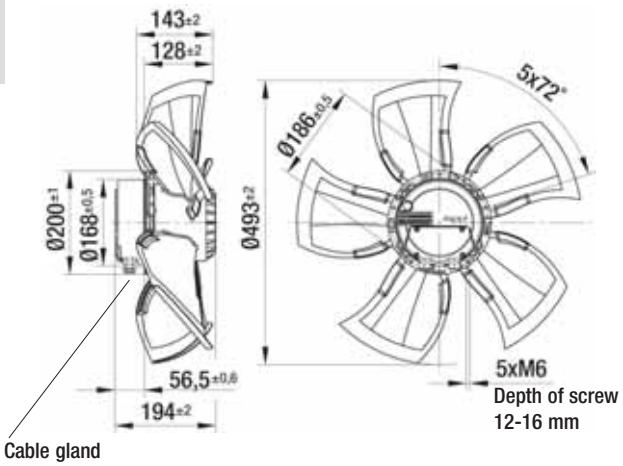

With full square nozzle

Type	Mass [kg]
W3G 500-CE33 -11	16.2
W3G 500-CE38 -06	16.2
W3G 500-CE33 -01	16.2

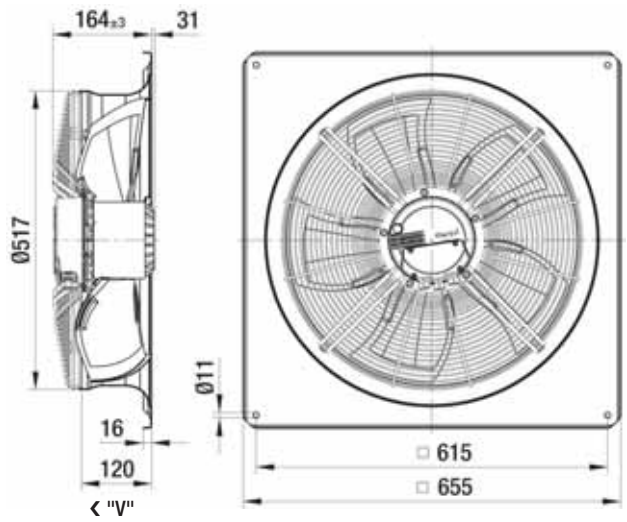

With guard grille for full nozzle

Type	Mass [kg]
S3G 500-BE33 -11	11.2
S3G 500-BE38 -06	11.2
S3G 500-BE33 -01	11.2

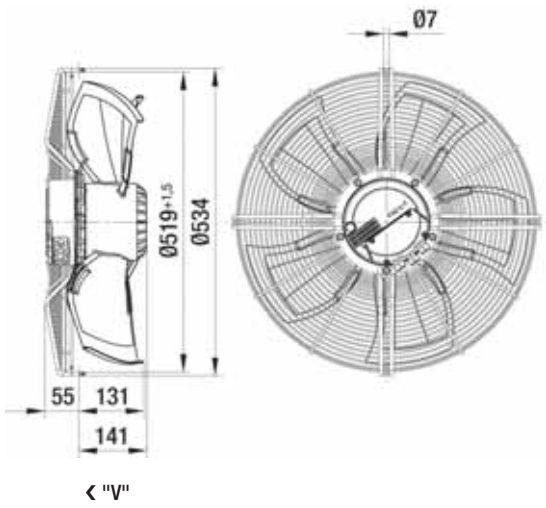

ebmpapst

With guard grille for short nozzle

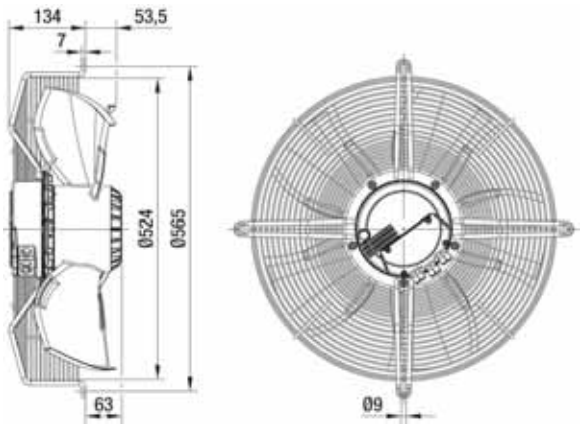

‹ "V"

Type	Mass [kg]
S3G 500-AE33 -11	12.4
S3G 500-AE38 -06	12.4
S3G 500-AE33 -01	12.4

EC axial fans mains-powered

S series, Ø 560

- **Material:** Guard grille: Steel, phosphated and coated in black plastic
  Wall ring: Sheet steel, pre-galvanised and coated in black plastic
  Blades: PA plastic
  Rotor: Cast-in with PA plastic
  Electronics enclosure: Die-cast aluminium, coated in black
- **Number of blades:** 5
- **Direction of rotation:** Counter-clockwise, seen on rotor
- **Type of protection:** IP 54 (acc. to EN 60529)
- **Insulation class:** "F"
- **Mounting position:** Shaft horizontal or rotor on bottom; rotor on top on request
- **Condensate discharges:** Rotor-side
- **Mode of operation:** Continuous operation (S1)
- **Bearings:** Maintenance-free ball bearings

Nominal data		Curve	Nominal voltage range	Frequency	Speed/rpm	Max. power input (1)	Max. current draw (1)	Max. operative range	Perm. amb. temp.	Electr. connection
Type	**Motor**		**VAC**	**Hz**	**rpm**	**kW**	**A**	**Pa**	**°C**	p. 427
***3G 560**	M3G 112-GA	Ⓐ	1~ 200-277	50/60	1160	0.79	3.50	155	-25 to +60	L1)

subject to alterations

(1) Nominal data in operating point with maximum load and 230 VAC

Curves

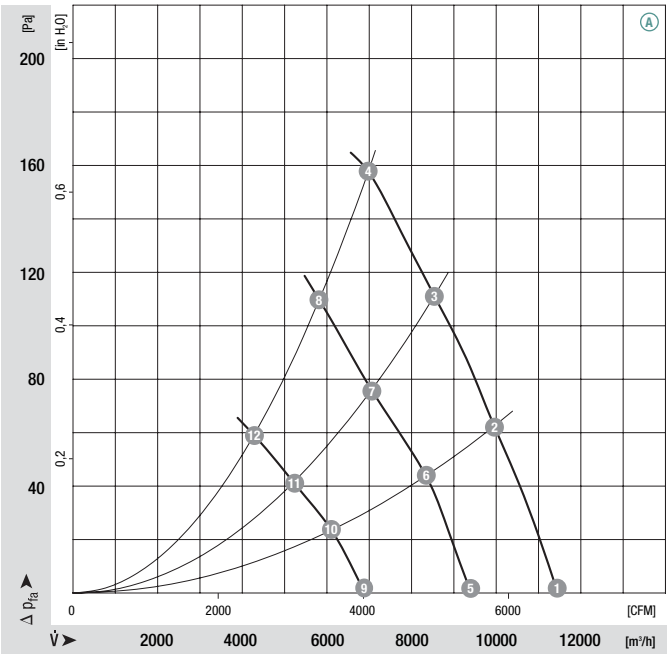

	n [rpm]	P_1 [kW]	I [A]	Lw_A [dB(A)]	η_{tL} [%]
Ⓐ 1	1160	0.66	3.00	77	—
Ⓐ 2	1160	0.73	3.30	80	82
Ⓐ 3	1150	0.77	3.40	80	74
Ⓐ 4	1160	0.79	3.50	80	65
Ⓐ 5	970	0.35	1.60	73	—
Ⓐ 6	950	0.39	1.80	75	92
Ⓐ 7	930	0.40	1.80	74	82
Ⓐ 8	940	0.41	1.90	74	72
Ⓐ 9	680	0.14	0.70	67	—
Ⓐ 10	690	0.16	0.80	67	96
Ⓐ 11	680	0.17	0.80	65	88
Ⓐ 12	680	0.17	0.80	66	76

ebmpapst

- **Technical features:**
  - PFC (active)
  - Integrated PID controller
  - Control input 0-10 VDC / PWM
  - Input for sensor 0-10 V or 4-20 mA
  - Slave output 0-10 V max. 3 mA
  - Output 20 VDC (±20 %) max. 50 mA
  - Output 10 VDC (+10 %) max. 10 mA
  - RS485 ebmBUS
  - Alarm relay
  - Line undervoltage detection
  - Motor current limitation
  - Over-temperature protected electronics / motor
  - Locked rotor protection
  - Soft start
- **EMC:** Interference emission acc. to EN 61000-6-4 (industrial environment)
  Interference immunity acc. to EN 61000-6-2 (industrial environment)
  Harmonics acc. to DIN EN 61000-3-2/3
- **Leakage current:** < 3.5 mA acc. to EN 61800-5-1
- **Connection leads:** Via terminal strip
- **Protection class:** I (acc. to EN 61800-5-1)
- **Product conforming to standard:** CE
- **Approvals:** VDE, UL, CSA, GOST; CCC is applied for

Direction of air flow	❮ "V"	❮ "V"	❮ "V"	❮ "V"
	Without attachments	**With full square nozzle**	**With guard grille for full nozzle**	**With guard grille for short nozzle**
"V"	A3G 560-AE41 -11	W3G 560-CE41 -11	S3G 560-BE41 -11	S3G 560-AE41 -11

EC axial fans mains-powered

S series, Ø 560

- **Material:** Guard grille: Steel, phosphated and coated in black plastic
  Wall ring: Sheet steel, pre-galvanised and coated in black plastic
  Blades: PA plastic
  Rotor: Cast-in with PA plastic
  Electronics enclosure: Die-cast aluminium, coated in black
- **Number of blades:** 5
- **Direction of rotation:** Counter-clockwise, seen on rotor
- **Type of protection:** IP 54 (acc. to EN 60529)
- **Insulation class:** "F"
- **Mounting position:** Shaft horizontal or rotor on bottom; rotor on top on request
- **Condensate discharges:** Rotor-side
- **Mode of operation:** Continuous operation (S1)
- **Bearings:** Maintenance-free ball bearings

Nominal data		Curve	Nominal voltage range	Frequency	Speed/rpm	Max. power input (1)	Max. current draw (1)	Max. operative range	Perm. amb. temp.	Electr. connection
Type	**Motor**		**VAC**	**Hz**	**rpm**	**kW**	**A**	**Pa**	**°C**	p. 427
***3G 560**	M3G 112-GA	A	3~ 200-240	50/60	1260	0.97	3.20	180	-25 to +60	L2)
***3G 560**	M3G 112-GA	B	3~ 380-480	50/60	1260	0.97	1.60	180	-25 to +60	L2)

subject to alterations

(1) Nominal data in operating point with maximum load and 200 or 400 VAC

Curves

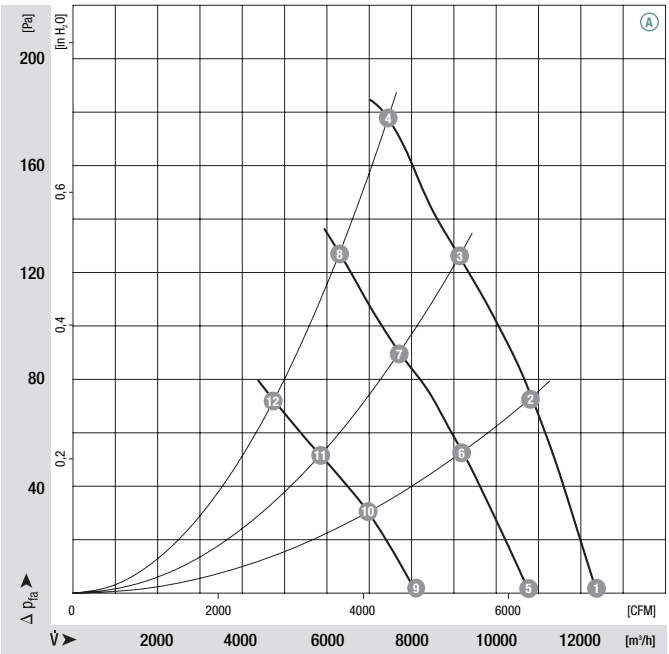

	n [rpm]	P_1 [kW]	I [A]	Lw_A [dB(A)]	η_{tL} [%]
A 1	1260	0.81	2.80	77	—
A 2	1260	0.92	3.20	80	75
A 3	1260	0.96	3.20	81	65
A 4	1260	0.97	3.20	83	58
A 5	1080	0.50	2.00	73	—
A 6	1060	0.53	2.00	75	80
A 7	1050	0.54	2.00	76	71
A 8	1040	0.54	2.00	78	63
A 9	800	0.22	1.00	67	—
A 10	790	0.24	1.00	68	86
A 11	780	0.24	1.00	69	75
A 12	780	0.24	1.00	69	66

ebmpapst

- **Technical features:**
  - PFC (passive)
  - Integrated PID controller
  - Control input 0-10 VDC / PWM
  - Input for sensor 0-10 V or 4-20 mA
  - Slave output 0-10 V max. 3 mA
  - Output 20 VDC (±20 %) max. 50 mA
  - Output 10 VDC (+10 %) max. 10 mA
  - RS485 ebmBUS
  - Alarm relay
  - Line undervoltage / phase failure detection
  - Motor current limitation
  - Over-temperature protected electronics / motor
  - Locked rotor protection
  - Soft start
- **EMC:** Interference emission acc. to EN 61000-6-3
  Interference immunity acc. to EN 61000-6-2
  Harmonics acc. to EN 61000-3-2/3
- **Leakage current:** < 3.5 mA acc. to EN 61800-5-1
- **Connection leads:** Via terminal strip
- **Protection class:** I (acc. to EN 61800-5-1)
- **Product conforming to standard:** CE
- **Approvals:** VDE, UL, CSA, GOST; CCC is applied for

Direction of air flow

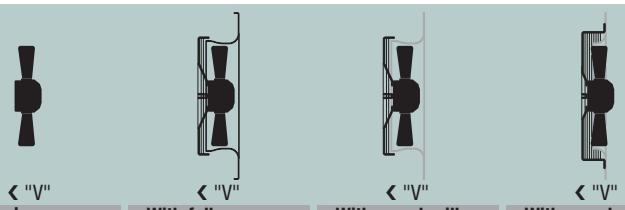

	Without attachments	With full square nozzle	With guard grille for full nozzle	With guard grille for short nozzle
"V"	A3G 560-AE43 -06	W3G 560-CE43 -06	S3G 560-BE43 -06	S3G 560-AE43 -06
"V"	A3G 560-AE32 -01	W3G 560-CE32 -01	S3G 560-BE32 -01	S3G 560-AE32 -01

Curves

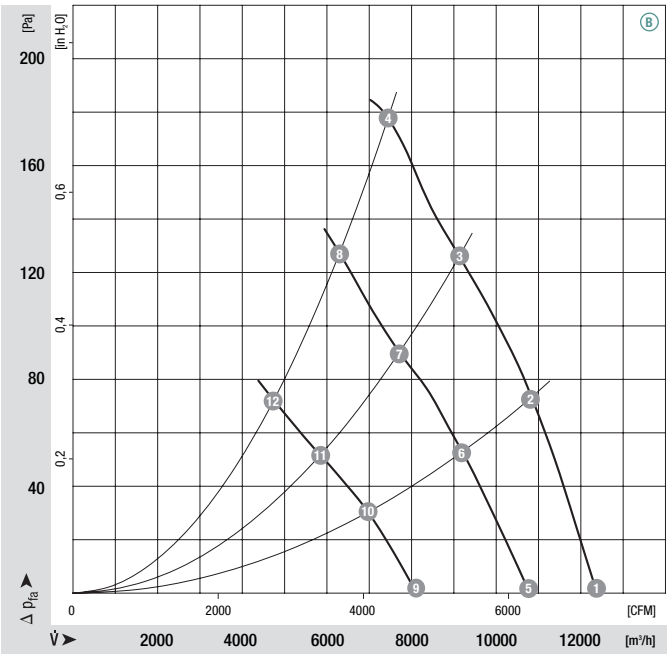

	n [rpm]	P_1 [kW]	I [A]	Lw_A [dB(A)]	η_{tL} [%]
B 1	1260	0.81	1.40	77	—
B 2	1260	0.92	1.60	80	75
B 3	1260	0.96	1.60	81	65
B 4	1260	0.97	1.60	83	58
B 5	1080	0.50	1.00	73	—
B 6	1060	0.53	1.00	75	80
B 7	1050	0.54	1.00	76	71
B 8	1040	0.54	1.00	78	63
B 9	800	0.22	0.50	67	—
B 10	790	0.24	0.50	68	86
B 11	780	0.24	0.50	69	75
B 12	780	0.24	0.50	69	66

Drawings p. 236 f.

Electr. connection p. 427

EC axial fans mains-powered

S series, Ø 560, drawings for direction of air flow "V"

Without attachments

Type	Mass [kg]
A3G 560-AE41 -11	8.9
A3G 560-AE43 -06	8.9
A3G 560-AE32 -01	8.9

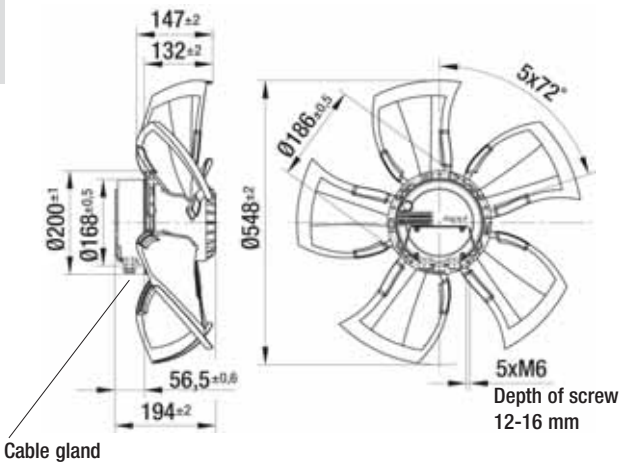

With full square nozzle

Type	Mass [kg]
W3G 560-CE41 -11	18.0
W3G 560-CE43 -06	18.0
W3G 560-CE32 -01	18.0

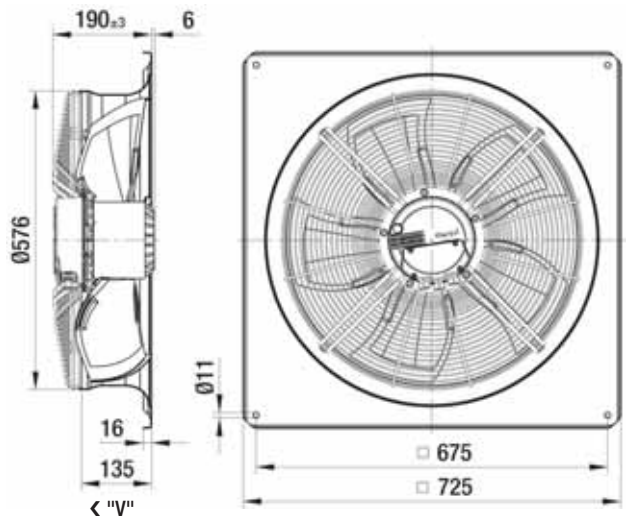

With guard grille for full nozzle

Type	Mass [kg]
S3G 560-BE41 -11	11.9
S3G 560-BE43 -06	11.9
S3G 560-BE32 -01	11.9

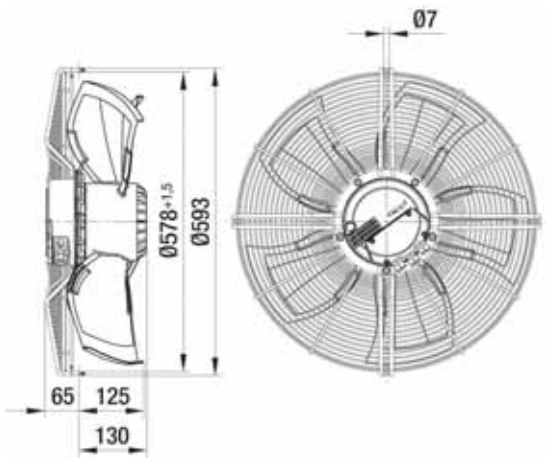

ebmpapst

With guard grille for short nozzle

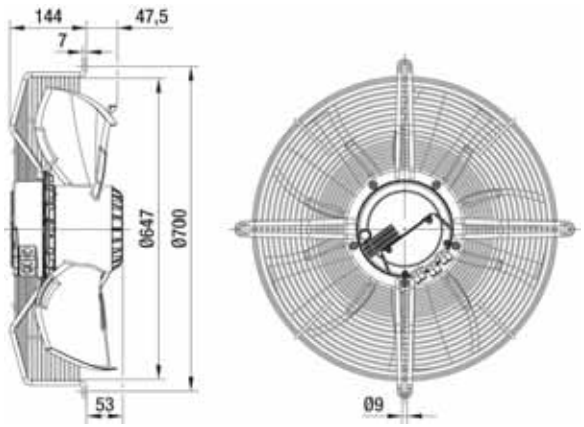

‹ "V"

Type	Mass [kg]
S3G 560-AE41 -11	13.6
S3G 560-AE43 -06	13.6
S3G 560-AE32 -01	13.6

EC axial fans mains-powered

S series, Ø 630

- **Material:** Guard grille: Steel, phosphated and coated in black plastic
  Wall ring: Sheet steel, pre-galvanised and coated in black plastic
  Blades: PA plastic
  Rotor: Cast-in with PA plastic
  Electronics enclosure: Die-cast aluminium, coated in black
- **Number of blades:** 5
- **Direction of rotation:** Counter-clockwise, seen on rotor
- **Type of protection:** IP 54 (acc. to EN 60529)
- **Insulation class:** "F"
- **Mounting position:** Shaft horizontal or rotor on bottom; rotor on top on request
- **Condensate discharges:** Rotor-side
- **Mode of operation:** Continuous operation (S1)
- **Bearings:** Maintenance-free ball bearings

Nominal data

Type	Motor	Curve	Nominal voltage range	Frequency	Speed/rpm	Max. power input (1)	Max. current draw (1)	Max. operative range	Perm. amb. temp.	Electr. connection
			VAC	Hz	rpm	kW	A	Pa	°C	p. 427
*3G 630	M3G 112-GA	A	1~ 200-277	50/60	970	0.73	3.30	135	-25 to +60	L1)

subject to alterations

(1) Nominal data in operating point with maximum load and 230 VAC

Curves

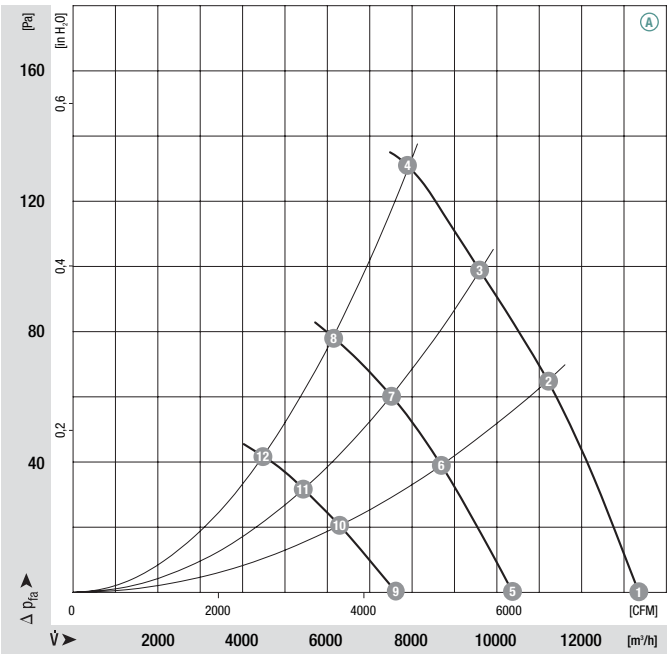

	n [rpm]	P_1 [kW]	I [A]	Lw_A [dB(A)]	η_{tL} [%]
A 1	970	0.55	2.60	74	—
A 2	970	0.66	3.00	76	88
A 3	960	0.69	3.20	77	79
A 4	970	0.73	3.30	79	68
A 5	750	0.25	1.20	68	—
A 6	750	0.30	1.40	70	92
A 7	750	0.32	1.50	71	83
A 8	750	0.33	1.60	72	70
A 9	540	0.11	0.70	61	—
A 10	540	0.13	0.70	63	92
A 11	540	0.14	0.60	63	85
A 12	540	0.14	0.70	63	71

ebmpapst

- **Technical features:**
  - PFC (active)
  - Integrated PID controller
  - Control input 0-10 VDC / PWM
  - Input for sensor 0-10 V or 4-20 mA
  - Slave output 0-10 V max. 3 mA
  - Output 20 VDC (±20 %) max. 50 mA
  - Output 10 VDC (+10 %) max. 10 mA
  - RS485 ebmBUS
  - Alarm relay
  - Line undervoltage detection
  - Motor current limitation
  - Over-temperature protected electronics / motor
  - Locked rotor protection
  - Soft start
- **EMC:** Interference emission acc. to EN 61000-6-4 (industrial environment)
  Interference immunity acc. to EN 61000-6-2 (industrial environment)
  Harmonics acc. to DIN EN 61000-3-2/3
- **Leakage current:** < 3.5 mA acc. to EN 61800-5-1
- **Connection leads:** Via terminal strip
- **Protection class:** I (acc. to EN 61800-5-1)
- **Product conforming to standard:** CE
- **Approvals:** VDE, UL, CSA, GOST; CCC is applied for

Direction of air flow	❮ "V"	❮ "V"	❮ "V"	❮ "V"
	Without attachments	**With full square nozzle**	**With guard grille for full nozzle**	**With guard grille for short nozzle**
"V"	A3G 630-AE37 -11	W3G 630-CE37 -11	S3G 630-BE37 -11	S3G 630-AE37 -11

EC axial fans mains-powered

S series, Ø 630

- **Material:** Guard grille: Steel, phosphated and coated in black plastic
  Wall ring: Sheet steel, pre-galvanised and coated in black plastic
  Blades: PA plastic
  Rotor: Cast-in with PA plastic
  Electronics enclosure: Die-cast aluminium, coated in black
- **Number of blades:** 5
- **Direction of rotation:** Counter-clockwise, seen on rotor
- **Type of protection:** IP 54 (acc. to EN 60529)
- **Insulation class:** "F"
- **Mounting position:** Shaft horizontal or rotor on bottom; rotor on top on request
- **Condensate discharges:** Rotor-side
- **Mode of operation:** Continuous operation (S1)
- **Bearings:** Maintenance-free ball bearings

Nominal data

Type	Motor	Curve	Nominal voltage range	Frequency	Speed/rpm	Max. power input (1)	Max. current draw (1)	Max. operative range	Perm. amb. temp.	Electr. connection
			VAC	Hz	rpm	kW	A	Pa	°C	p. 427
*3G 630	M3G 112-GA	A	3~ 200-240	50/60	1010	0.83	3.00	150	-25 to +60	L2)
*3G 630	M3G 112-GA	B	3~ 380-480	50/60	1010	0.83	1.50	150	-25 to +60	L2)

subject to alterations

(1) Nominal data in operating point with maximum load and 200 or 400 VAC

Curves

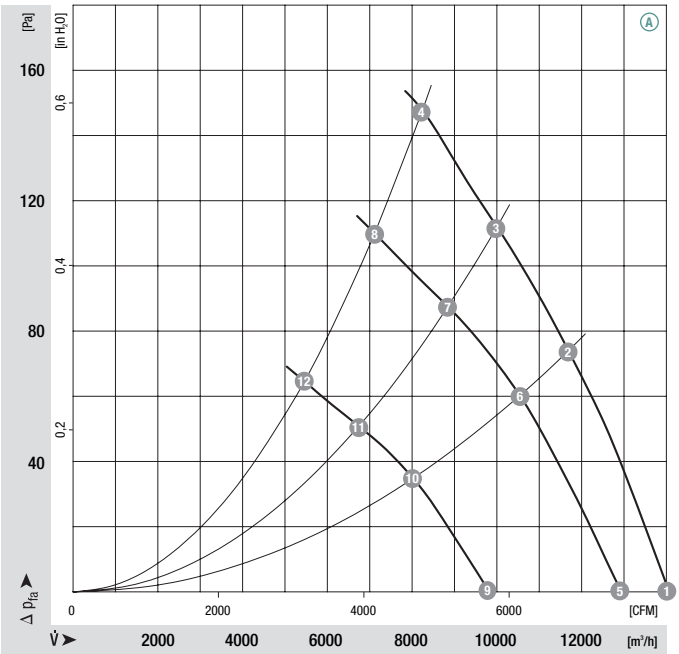

	n [rpm]	P_1 [kW]	I [A]	Lw_A [dB(A)]	η_{tL} [%]
A 1	1010	0.62	2.20	75	—
A 2	1010	0.74	2.60	77	87
A 3	1010	0.78	2.80	78	77
A 4	1010	0.83	3.00	79	65
A 5	920	0.45	1.80	73	—
A 6	900	0.51	2.00	75	92
A 7	880	0.49	1.80	75	83
A 8	860	0.51	2.00	76	68
A 9	680	0.20	0.80	66	—
A 10	680	0.22	1.00	67	49
A 11	660	0.22	1.00	67	91
A 12	650	0.23	1.00	68	74

ebmpapst

- **Technical features:**
  - PFC (passive)
  - Integrated PID controller
  - Control input 0-10 VDC / PWM
  - Input for sensor 0-10 V or 4-20 mA
  - Slave output 0-10 V max. 3 mA
  - Output 20 VDC (±20 %) max. 50 mA
  - Output 10 VDC (+10 %) max. 10 mA
  - RS485 ebmBUS
  - Alarm relay
  - Line undervoltage / phase failure detection
  - Motor current limitation
  - Over-temperature protected electronics / motor
  - Locked rotor protection
  - Soft start
- **EMC:** Interference emission acc. to EN 61000-6-3
  Interference immunity acc. to EN 61000-6-2
  Harmonics acc. to EN 61000-3-2/3
- **Leakage current:** < 3.5 mA acc. to EN 61800-5-1
- **Connection leads:** Via terminal strip
- **Protection class:** I (acc. to EN 61800-5-1)
- **Product conforming to standard:** CE
- **Approvals:** VDE, UL, CSA, GOST; CCC is applied for

Direction of air flow

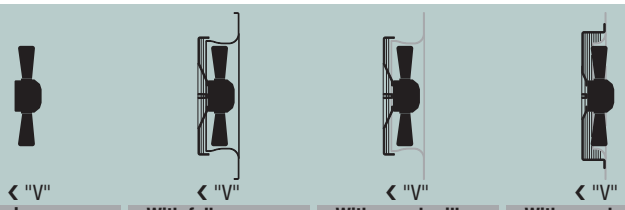

	Without attachments	With full square nozzle	With guard grille for full nozzle	With guard grille for short nozzle
"V"	A3G 630-AE42 -06	W3G 630-CE42 -06	S3G 630-BE42 -06	S3G 630-AE42 -06
"V"	A3G 630-AE31 -01	W3G 630-CE31 -01	S3G 630-BE31 -01	S3G 630-AE31 -01

Curves

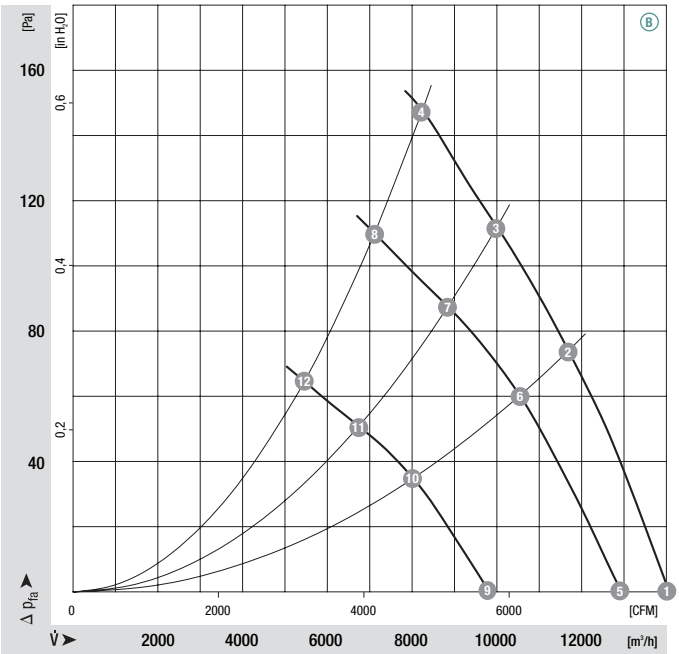

	n [rpm]	P_1 [kW]	I [A]	Lw_A [dB(A)]	η_{tL} [%]
B 1	1010	0.62	1.10	75	—
B 2	1010	0.74	1.30	77	87
B 3	1010	0.78	1.40	78	77
B 4	1010	0.83	1.50	79	65
B 5	920	0.45	0.90	73	—
B 6	900	0.51	1.00	75	92
B 7	880	0.49	0.90	75	83
B 8	860	0.51	1.00	76	68
B 9	680	0.20	0.40	66	—
B 10	680	0.22	0.50	67	49
B 11	660	0.22	0.50	67	91
B 12	650	0.23	0.50	68	74

Drawings p. 242 f.

Electr. connection p. 427

EC axial fans mains-powered

S series, Ø 630, drawings for direction of air flow "V"

Without attachments

Type	Mass [kg]
A3G 630-AE37 -11	9.1
A3G 630-AE42 -06	9.1
A3G 630-AE31 -01	9.1

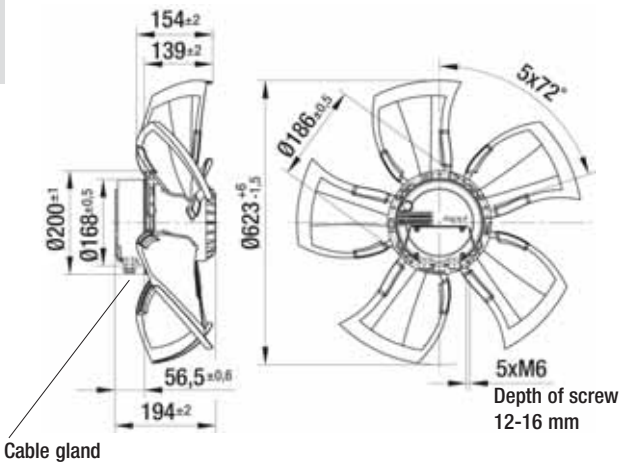

With full square nozzle

Type	Mass [kg]
W3G 630-CE37 -11	20.4
W3G 630-CE42 -06	20.4
W3G 630-CE31 -01	20.4

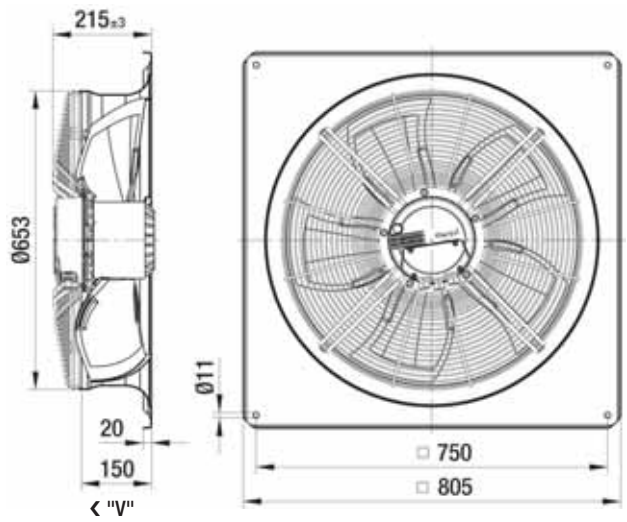

With guard grille for full nozzle

Type	Mass [kg]
S3G 630-BE37 -11	12.8
S3G 630-BE42 -06	12.8
S3G 630-BE31 -01	12.8

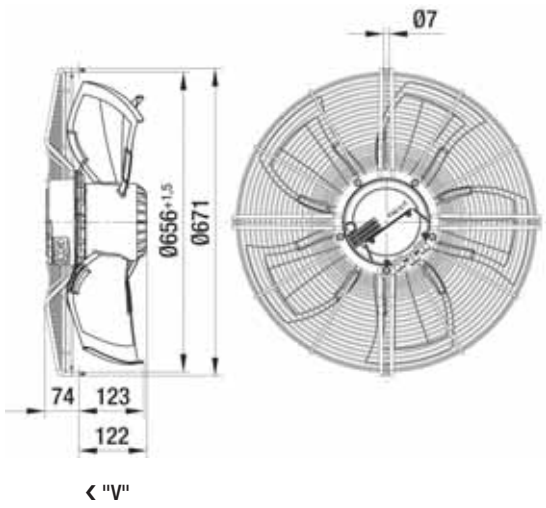

ebmpapst

With guard grille for short nozzle

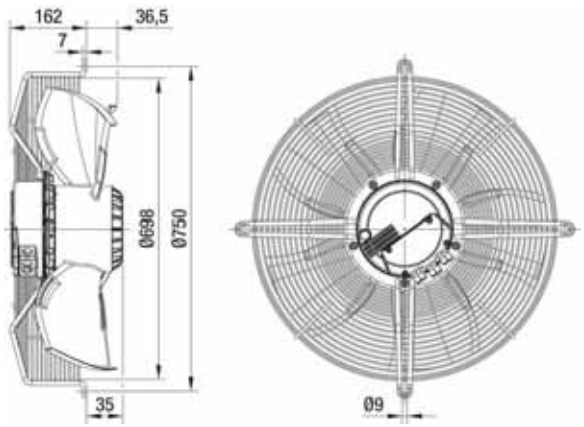

‹ "V"

Type	Mass [kg]
S3G 630-AE37 -11	14.6
S3G 630-AE42 -06	14.6
S3G 630-AE31 -01	14.6

EC axial fans mains-powered

S series, Ø 630

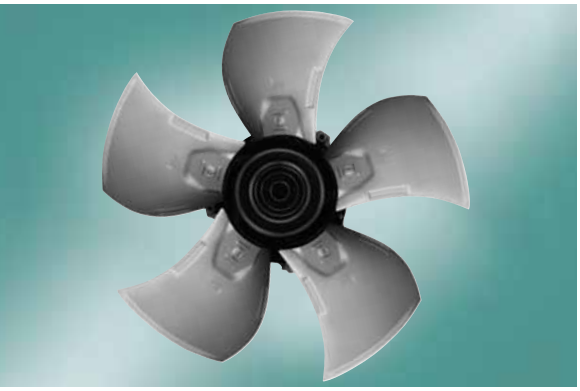

- **Material:** Guard grille: Steel, phosphated and coated in black plastic
  Wall ring: Sheet steel, pre-galvanised and coated in black plastic
  Blades: Die-cast aluminium
  Rotor: Cast-in with PA plastic
  Electronics enclosure: Die-cast aluminium, coated in black
- **Number of blades:** 5
- **Direction of rotation:** Dir. of air flow "V" clockwise, "A" counter-clockwise, seen on rotor
- **Type of protection:** IP 54 (acc. to EN 60529)
- **Insulation class:** "F"
- **Mounting position:** Shaft horizontal or rotor on bottom; rotor on top on request
- **Condensate discharges:** Rotor-side
- **Mode of operation:** Continuous operation (S1)
- **Bearings:** Maintenance-free ball bearings

Nominal data		Blade angle	Curve	Nominal voltage range	Frequency	Speed/rpm	Max. power input (1)	Max. current draw (1)	Max. operative range	Perm. amb. temp.	Electr. connection
Type	**Motor**			**VAC**	**Hz**	**rpm**	**kW**	**A**	**Pa**	**°C**	p. 428
***3G 630**	M3G 150-FF	0°	A	3~ 200-240	50/60	1220	1.70	5.20	215	-25 to +60	M)
***3G 630**	M3G 150-FF	0°	B	3~ 380-480	50/60	1220	1.70	2.60	215	-25 to +60	M)

subject to alterations

(1) Nominal data in operating point with maximum load and 200 or 400 VAC

Curves

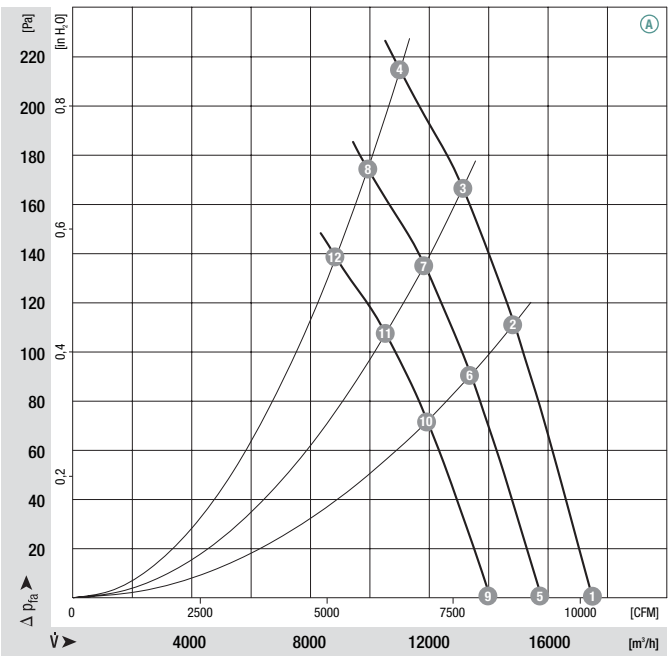

	n [rpm]	P_1 [kW]	I [A]	Lw_A [dB(A)]	η_{tL} [%]
A 1	1220	1.30	4.00	77	—
A 2	1220	1.52	4.80	76	77
A 3	1220	1.60	5.00	78	70
A 4	1220	1.70	5.20	81	58
A 5	1100	0.95	3.00	75	—
A 6	1100	1.11	3.60	74	77
A 7	1100	1.18	3.60	76	70
A 8	1100	1.24	3.80	79	58
A 9	980	0.67	2.20	72	—
A 10	980	0.79	2.40	72	77
A 11	980	0.83	2.60	73	70
A 12	980	0.88	2.80	76	58

ebmpapst

- **Technical features:**
  - PFC (passive)
  - Integrated PID controller
  - Control input 0-10 VDC / PWM
  - Input for sensor 0-10 V or 4-20 mA
  - Slave output 0-10 V max. 3 mA
  - Output 20 VDC (±20 %) max. 50 mA
  - Output 10 VDC (+10 %) max. 10 mA
  - RS485 ebmBUS
  - Alarm relay
  - Line undervoltage / phase failure detection
  - Motor current limitation
  - Over-temperature protected electronics / motor
  - Locked rotor protection
  - Soft start
- **EMC:** Interference emission acc. to EN 61000-6-3
  Interference immunity acc. to EN 61000-6-2
  Harmonics acc. to EN 61000-3-2/3
- **Leakage current:** < 3.5 mA acc. to EN 61800-5-1
- **Connection leads:** Via terminal strip
- **Protection class:** I (acc. to EN 61800-5-1)
- **Product conforming to standard:** CE
- **Approvals:** UL, CSA, GOST; (B) also VDE

Direction of air flow

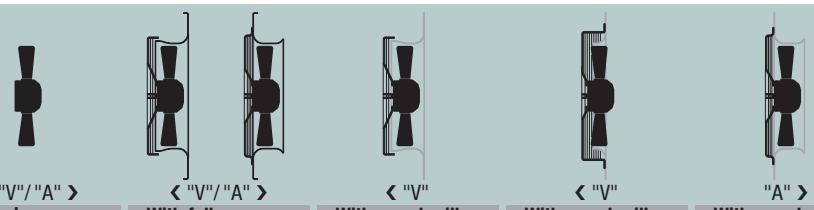

	Without attachments	With full square nozzle	With guard grille for full nozzle	With guard grille for short nozzle	With guard grille for full nozzle
"V"	A3G 630-AG12 -13	W3G 630-CG12 -13	S3G 630-BG12 -13	S3G 630-AG12 -13	—
"A"	A3G 630-AG12 -14	W3G 630-CG12 -14	—	—	S3G 630-CG12 -14
"V"	A3G 630-AG08 -03	W3G 630-CG08 -03	S3G 630-BG08 -03	S3G 630-AG08 -03	—
"A"	A3G 630-AG08 -04	W3G 630-CG08 -04	—	—	S3G 630-CG08 -04

Curves

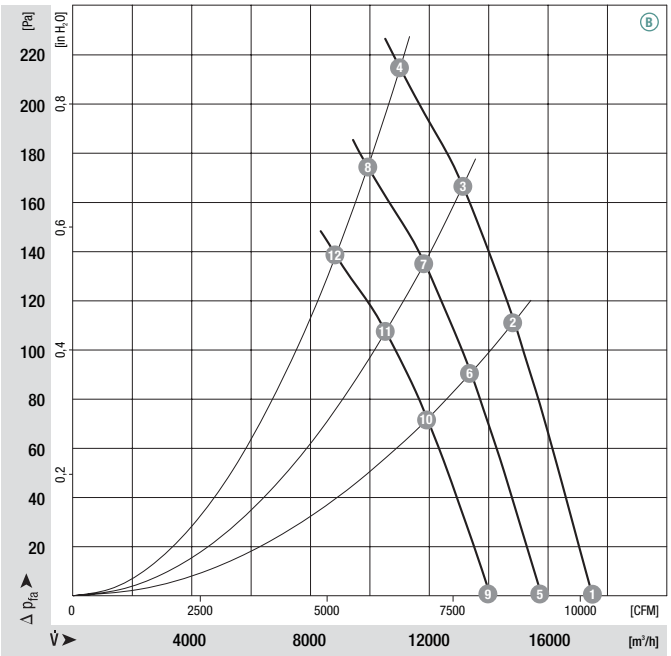

	n [rpm]	P_1 [kW]	I [A]	Lw_A [dB(A)]	η_{tL} [%]
(B) 1	1220	1.30	2.00	77	—
(B) 2	1220	1.52	2.40	76	77
(B) 3	1220	1.60	2.50	78	70
(B) 4	1220	1.70	2.60	81	58
(B) 5	1100	0.95	1.50	75	—
(B) 6	1100	1.11	1.80	74	77
(B) 7	1100	1.18	1.80	76	70
(B) 8	1100	1.24	1.90	79	58
(B) 9	980	0.67	1.10	72	—
(B) 10	980	0.79	1.20	72	77
(B) 11	980	0.83	1.30	73	70
(B) 12	980	0.88	1.40	76	58

Drawings p. 248 ff.

Electr. connection p. 428

EC axial fans mains-powered

S series, Ø 630

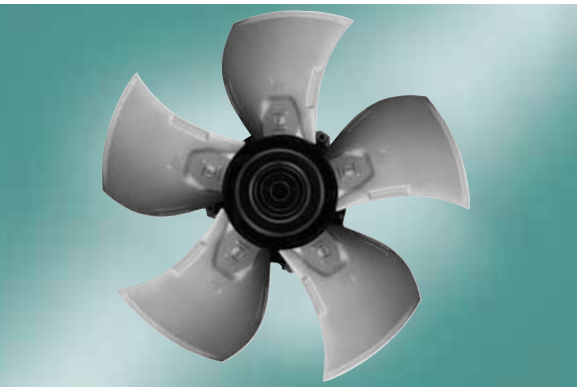

- **Material:** Guard grille: Steel, phosphated and coated in black plastic
  Wall ring: Sheet steel, pre-galvanised and coated in black plastic
  Blades: Die-cast aluminium
  Rotor: Cast-in with PA plastic
  Electronics enclosure: Die-cast aluminium, coated in black
- **Number of blades:** 5
- **Direction of rotation:** Dir. of air flow "V" clockwise, "A" counter-clockwise, seen on rotor
- **Type of protection:** IP 54 (acc. to EN 60529)
- **Insulation class:** "F"
- **Mounting position:** Shaft horizontal or rotor on bottom; rotor on top on request
- **Condensate discharges:** Rotor-side
- **Mode of operation:** Continuous operation (S1)
- **Bearings:** Maintenance-free ball bearings

Nominal data		Blade angle	Curve	Nominal voltage range	Frequency	Speed/rpm	Max. power input (1)	Max. current draw (1)	Max. operative range	Perm. amb. temp.	Electr. connection
Type	**Motor**			**VAC**	**Hz**	**rpm**	**kW**	**A**	**Pa**	**°C**	p. 428
***3G 630**	M3G 150-IF	0°	A	3~ 200-240	50/60	1490	3.10	9.40	340	-25 to +60	M)
***3G 630**	M3G 150-IF	0°	B	3~ 380-480	50/60	1490	3.10	4.70	340	-25 to +60	M)

subject to alterations

(1) Nominal data in operating point with maximum load and 200 or 400 VAC

Curves

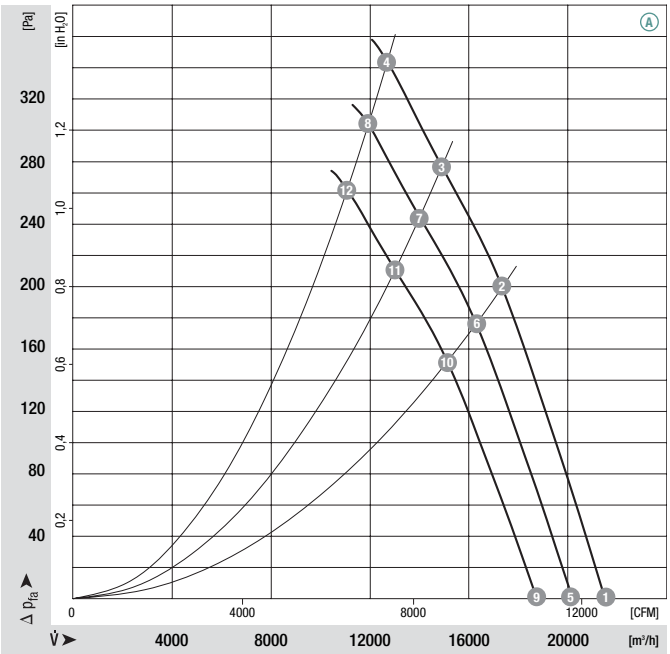

	n [rpm]	P_1 [kW]	I [A]	Lw_A [dB(A)]	η_{tL} [%]
A 1	1490	2.35	7.20	82	—
A 2	1490	2.77	8.40	82	74
A 3	1490	2.94	9.00	84	64
A 4	1490	3.10	9.40	87	55
A 5	1400	1.95	6.00	80	—
A 6	1400	2.30	7.00	80	74
A 7	1400	2.44	7.40	83	64
A 8	1400	2.55	7.80	85	55
A 9	1300	1.56	4.80	79	—
A 10	1300	1.84	5.60	79	74
A 11	1300	1.95	6.00	81	64
A 12	1300	2.04	6.20	84	55

ebmpapst

- **Technical features:**
  - PFC (passive)
  - Integrated PID controller
  - Control input 0-10 VDC / PWM
  - Input for sensor 0-10 V or 4-20 mA
  - Slave output 0-10 V max. 3 mA
  - Output 20 VDC (±20 %) max. 50 mA
  - Output 10 VDC (+10 %) max. 10 mA
  - RS485 ebmBUS
  - Alarm relay
  - Line undervoltage / phase failure detection
  - Motor current limitation
  - Over-temperature protected electronics / motor
  - Locked rotor protection
  - Soft start
- **EMC:** Interference emission acc. to EN 61000-6-3
  Interference immunity acc. to EN 61000-6-2
  Harmonics acc. to EN 61000-3-2/3
- **Leakage current:** < 3.5 mA acc. to EN 61800-5-1
- **Connection leads:** Via terminal strip
- **Protection class:** I (acc. to EN 61800-5-1)
- **Product conforming to standard:** CE
- **Approvals:** UL, CSA, GOST; (B) also VDE

Direction of air flow

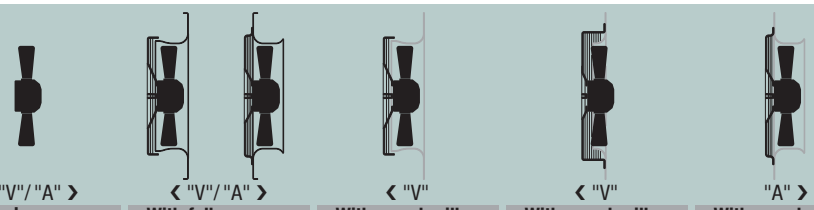

	Without attachments	With full square nozzle	With guard grille for full nozzle	With guard grille for short nozzle	With guard grille for full nozzle
"V"	A3G 630-AH07 -13	W3G 630-CH07 -13	S3G 630-BH07 -13	S3G 630-AH07 -13	—
"A"	A3G 630-AH07 -14	W3G 630-CH07 -14	—	—	S3G 630-CH07 -14
"V"	A3G 630-AH02 -03	W3G 630-CH02 -03	S3G 630-BH02 -03	S3G 630-AH02 -03	—
"A"	A3G 630-AH02 -04	W3G 630-CH02 -04	—	—	S3G 630-CH02 -04

Curves

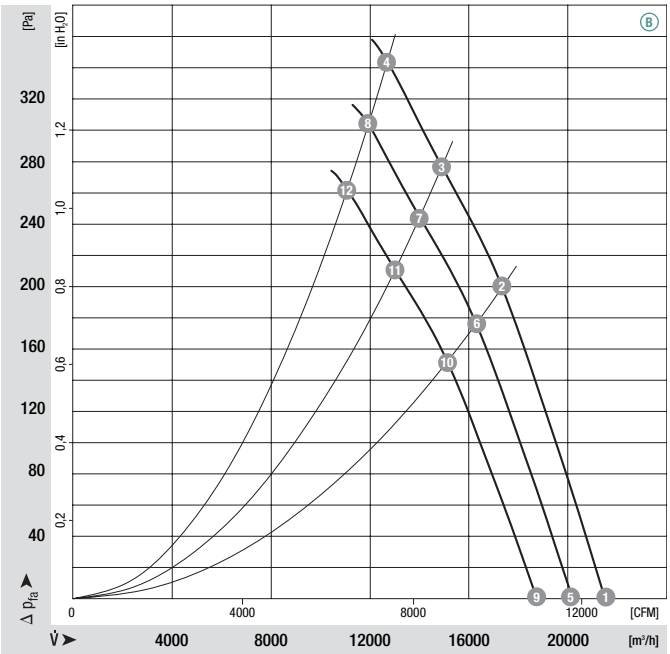

	n [rpm]	P_1 [kW]	I [A]	Lw_A [dB(A)]	η_{tL} [%]
(B) 1	1490	2.35	3.60	82	—
(B) 2	1490	2.77	4.20	82	74
(B) 3	1490	2.94	4.50	84	64
(B) 4	1490	3.10	4.70	87	55
(B) 5	1400	1.95	3.00	80	—
(B) 6	1400	2.30	3.50	80	74
(B) 7	1400	2.44	3.70	83	64
(B) 8	1400	2.55	3.90	85	55
(B) 9	1300	1.56	2.40	79	—
(B) 10	1300	1.84	2.80	79	74
(B) 11	1300	1.95	3.00	81	64
(B) 12	1300	2.04	3.10	84	55

Drawings p. 248 ff.

Electr. connection p. 428

EC axial fans mains-powered

S series, Ø 630, drawings for direction of air flow "V"

Without attachments

Type	Mass [kg]
A3G 630-AG08 -03	23.0
A3G 630-AG12 -13	23.0
A3G 630-AH02 -03	26.0
A3G 630-AH07 -13	26.0

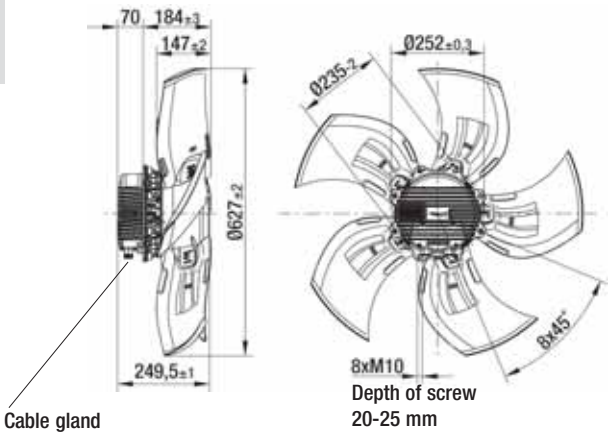

‹ "V"

With full square nozzle

Type	Mass [kg]
W3G 630-CG08 -03	38.0
W3G 630-CG12 -13	38.0
W3G 630-CH02 -03	41.0
W3G 630-CH07 -13	41.0

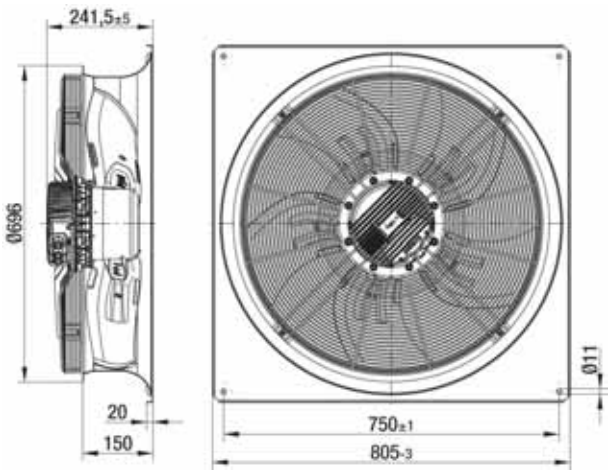

‹ "V"

With guard grille for full nozzle

Type	Mass [kg]
S3G 630-BG08 -03	27.5
S3G 630-BG12 -13	27.5
S3G 630-BH02 -03	30.5
S3G 630-BH07 -13	30.5

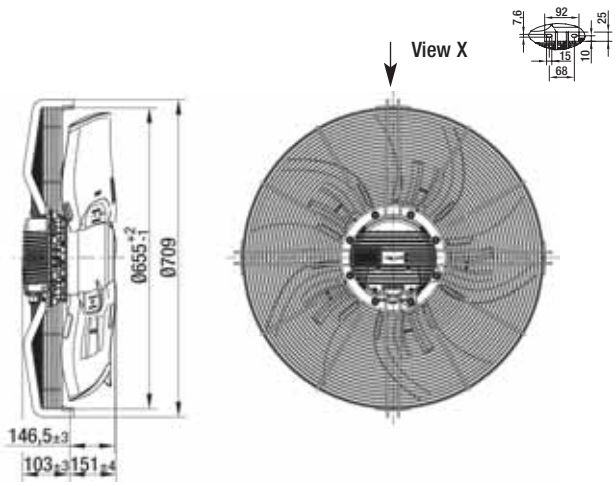

‹ "V"

ebmpapst

With guard grille for short nozzle

Type	Mass [kg]
S3G 630-AG08 -03	26.5
S3G 630-AG12 -13	26.5
S3G 630-AH02 -03	29.5
S3G 630-AH07 -13	29.5

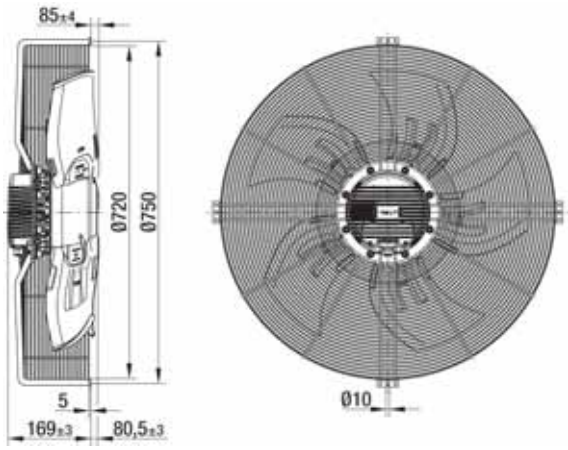

‹ "V"

EC axial fans mains-powered

S series, Ø 630, drawings for direction of air flow "A"

Without attachments

Type	Mass [kg]
A3G 630-AG08 -04	23.0
A3G 630-AG12 -14	23.0
A3G 630-AH02 -04	26.0
A3G 630-AH07 -14	26.0

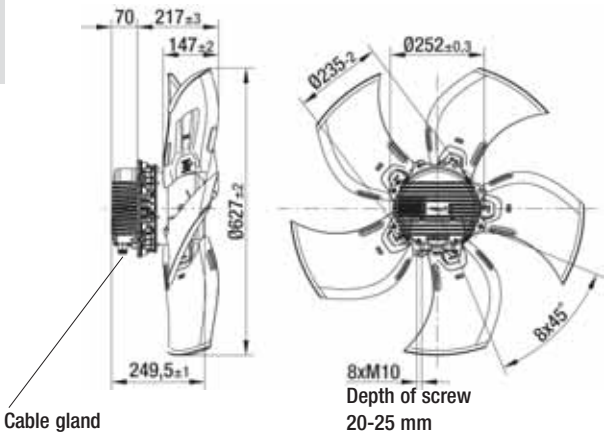

"A" ›

With full square nozzle

Type	Mass [kg]
W3G 630-CG08 -04	39.0
W3G 630-CG12 -14	39.0
W3G 630-CH02 -04	42.0
W3G 630-CH07 -14	42.0

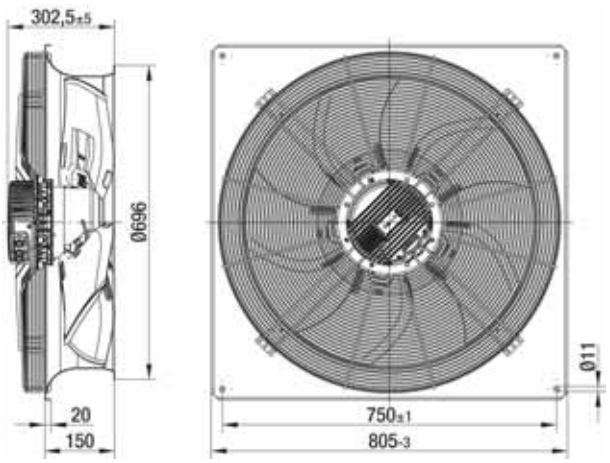

"A" ›

With guard grille for full nozzle

Type	Mass [kg]
S3G 630-CG08 -04	28.5
S3G 630-CG12 -14	28.5
S3G 630-CH02 -04	31.5
S3G 630-CH07 -14	31.5

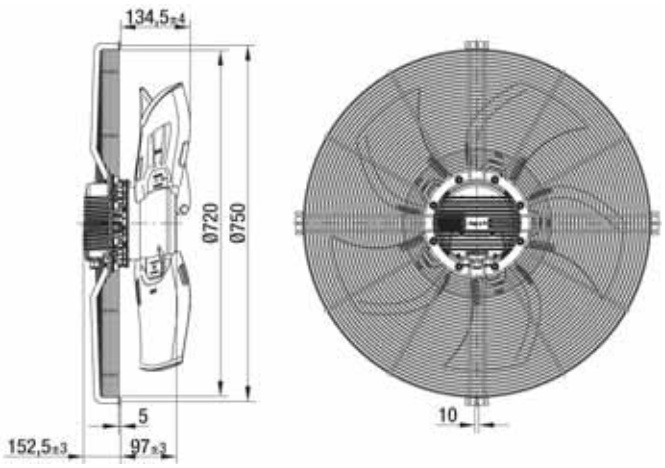

"A" ›

ebmpapst

EC axial fans mains-powered

S series, Ø 650

- **Material:** Guard grille: Steel, phosphated and coated in black plastic
  Wall ring: Sheet steel, pre-galvanised and coated in black plastic
  Blades: PA plastic
  Rotor: Cast-in with PA plastic
  Electronics enclosure: Die-cast aluminium, coated in black
- **Number of blades:** 5
- **Direction of rotation:** Counter-clockwise, seen on rotor
- **Type of protection:** IP 54 (acc. to EN 60529)
- **Insulation class:** "F"
- **Mounting position:** Shaft horizontal or rotor on bottom; rotor on top on request
- **Condensate discharges:** Rotor-side
- **Mode of operation:** Continuous operation (S1)
- **Bearings:** Maintenance-free ball bearings

Nominal data		Curve	Nominal voltage range	Frequency	Speed/rpm	Max. power input (1)	Max. current draw (1)	Max. operative range	Perm. amb. temp.	Electr. connection
Type	**Motor**		**VAC**	**Hz**	**rpm**	**kW**	**A**	**Pa**	**°C**	p. 427
***3G 650**	M3G 112-GA	A	1~ 200-277	50/60	890	0.66	3.00	90	-25 to +60	L1)

subject to alterations

(1) Nominal data in operating point with maximum load and 230 VAC

Curves

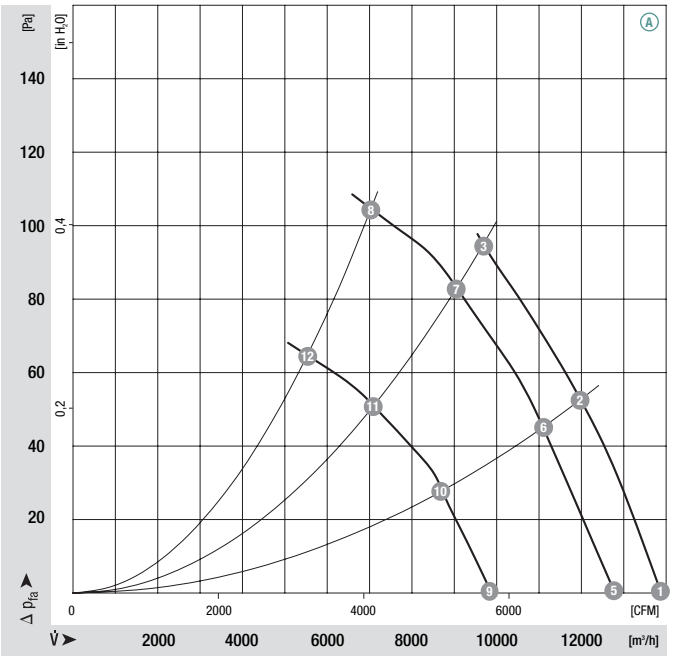

	n [rpm]	P_1 [kW]	I [A]	Lw_A [dB(A)]	η_{tL} [%]
A 1	910	0.55	2.50	76	—
A 2	900	0.63	2.90	77	90
A 3	890	0.66	3.00	79	78
A 4	—	—	—	—	—
A 5	830	0.41	1.90	73	—
A 6	830	0.48	2.20	75	91
A 7	820	0.49	2.30	76	84
A 8	810	0.51	2.30	76	65
A 9	650	0.19	0.90	67	—
A 10	640	0.23	1.10	68	95
A 11	640	0.24	1.10	69	86
A 12	630	0.25	1.20	70	67

ebmpapst

- **Technical features:**
  - PFC (active)
  - Integrated PID controller
  - Control input 0-10 VDC / PWM
  - Input for sensor 0-10 V or 4-20 mA
  - Slave output 0-10 V max. 3 mA
  - Output 20 VDC (±20 %) max. 50 mA
  - Output 10 VDC (+10 %) max. 10 mA
  - RS485 ebmBUS
  - Alarm relay
  - Line undervoltage detection
  - Motor current limitation
  - Over-temperature protected electronics / motor
  - Locked rotor protection
  - Soft start
- **EMC:** Interference emission acc. to EN 61000-6-4 (industrial environment)
  Interference immunity acc. to EN 61000-6-2 (industrial environment)
  Harmonics acc. to DIN EN 61000-3-2/3
- **Leakage current:** < 3.5 mA acc. to EN 61800-5-1
- **Connection leads:** Via terminal strip
- **Protection class:** I (acc. to EN 61800-5-1)
- **Product conforming to standard:** CE
- **Approvals:** VDE, UL, CSA, GOST; CCC is applied for

Direction of air flow	‹ "V"	‹ "V"	‹ "V"	‹ "V"
	Without attachments	**With full square nozzle**	**With guard grille for full nozzle**	**With guard grille for short nozzle**
"V"	A3G 650-AE34 -11	W3G 650-CE34 -01	S3G 650-BE34 -11	S3G 650-AE34 -11

EC axial fans mains-powered

S series, Ø 650

- **Material:** Guard grille: Steel, phosphated and coated in black plastic
  Wall ring: Sheet steel, pre-galvanised and coated in black plastic
  Blades: PA plastic
  Rotor: Cast-in with PA plastic
  Electronics enclosure: Die-cast aluminium, coated in black
- **Number of blades:** 5
- **Direction of rotation:** Counter-clockwise, seen on rotor
- **Type of protection:** IP 54 (acc. to EN 60529)
- **Insulation class:** "F"
- **Mounting position:** Shaft horizontal or rotor on bottom; rotor on top on request
- **Condensate discharges:** Rotor-side
- **Mode of operation:** Continuous operation (S1)
- **Bearings:** Maintenance-free ball bearings

Nominal data

Type	Motor	Curve	Nominal voltage range	Frequency	Speed/rpm	Max. power input (1)	Max. current draw (1)	Max. operative range	Perm. amb. temp.	Electr. connection
			VAC	Hz	rpm	kW	A	Pa	°C	p. 427
*3G 650	M3G 112-GA	A	3~ 200-240	50/60	910	0.72	2.60	125	-25 to +60	L2)
*3G 650	M3G 112-GA	B	3~ 380-480	50/60	910	0.72	1.30	125	-25 to +60	L2)

subject to alterations

(1) Nominal data in operating point with maximum load and 200 or 400 VAC

Curves

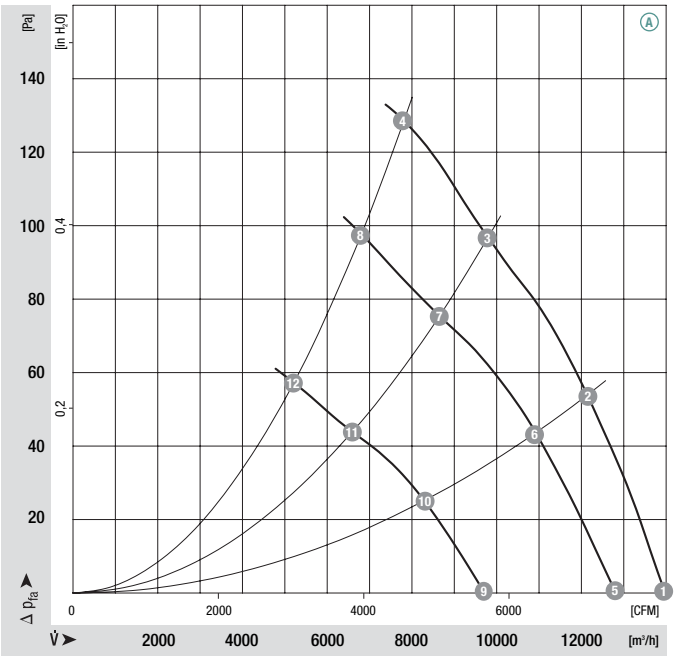

	n [rpm]	P_1 [kW]	I [A]	Lw_A [dB(A)]	η_{tL} [%]
A 1	910	0.53	1.80	75	—
A 2	910	0.62	2.20	77	87
A 3	910	0.66	2.40	78	74
A 4	910	0.72	2.60	79	60
A 5	830	0.39	1.60	73	—
A 6	810	0.43	1.60	74	91
A 7	790	0.43	1.60	74	79
A 8	790	0.46	1.80	75	62
A 9	630	0.17	0.80	66	—
A 10	620	0.19	0.80	67	94
A 11	600	0.19	0.80	67	83
A 12	610	0.21	0.80	67	63

ebmpapst

- **Technical features:**
  - PFC (passive)
  - Integrated PID controller
  - Control input 0-10 VDC / PWM
  - Input for sensor 0-10 V or 4-20 mA
  - Slave output 0-10 V max. 3 mA
  - Output 20 VDC (±20 %) max. 50 mA
  - Output 10 VDC (+10 %) max. 10 mA
  - RS485 ebmBUS
  - Alarm relay
  - Line undervoltage / phase failure detection
  - Motor current limitation
  - Over-temperature protected electronics / motor
  - Locked rotor protection
  - Soft start
- **EMC:** Interference emission acc. to EN 61000-6-3
  Interference immunity acc. to EN 61000-6-2
  Harmonics acc. to EN 61000-3-2/3
- **Leakage current:** < 3.5 mA acc. to EN 61800-5-1
- **Connection leads:** Via terminal strip
- **Protection class:** I (acc. to EN 61800-5-1)
- **Product conforming to standard:** CE
- **Approvals:** VDE, UL, CSA, GOST; CCC is applied for

Direction of air flow

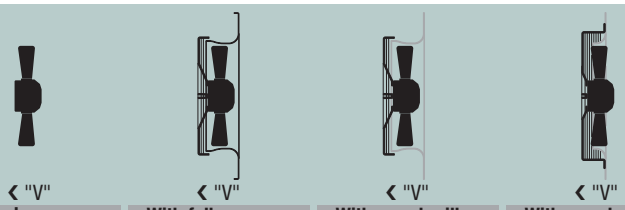

	Without attachments	With full square nozzle	With guard grille for full nozzle	With guard grille for short nozzle
"V"	A3G 650-AE44 -06	W3G 650-CE44 -06	S3G 650-BE44 -06	S3G 650-AE44 -08
"V"	A3G 650-AE35 -01	W3G 650-CE35 -01	S3G 650-BE35 -01	S3G 650-AE35 -01

Curves

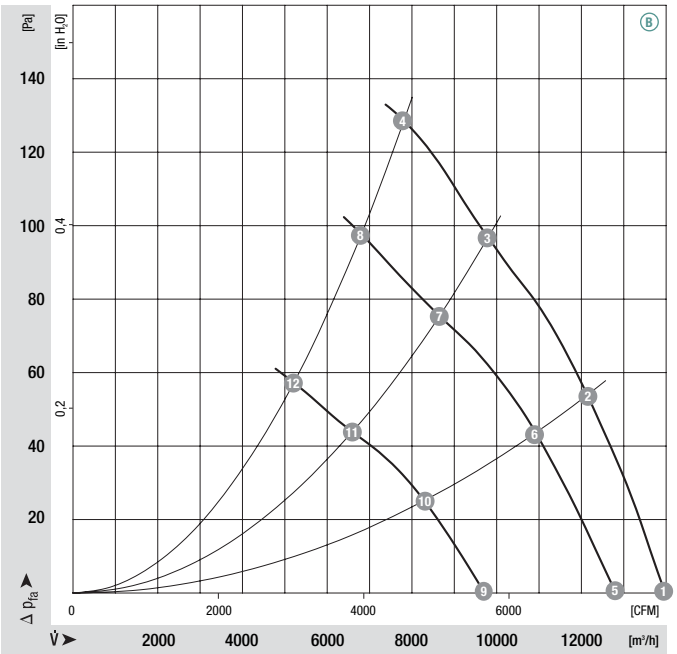

	n [rpm]	P_1 [kW]	I [A]	Lw_A [dB(A)]	η_{tL} [%]
B 1	910	0.53	0.90	75	—
B 2	910	0.62	1.10	77	87
B 3	910	0.66	1.20	78	74
B 4	910	0.72	1.30	79	60
B 5	830	0.39	0.80	73	—
B 6	810	0.43	0.80	74	91
B 7	790	0.43	0.80	74	79
B 8	790	0.46	0.90	75	62
B 9	630	0.17	0.40	66	—
B 10	620	0.19	0.40	67	94
B 11	600	0.19	0.40	67	83
B 12	610	0.21	0.40	67	63

Drawings p. 256 f.

Electr. connection p. 427

EC axial fans mains-powered

S series, Ø 650, drawings for direction of air flow "V"

Without attachments

Type	Mass [kg]
A3G 650-AE34 -11	9.2
A3G 650-AE44 -06	9.2
A3G 650-AE35 -01	9.2

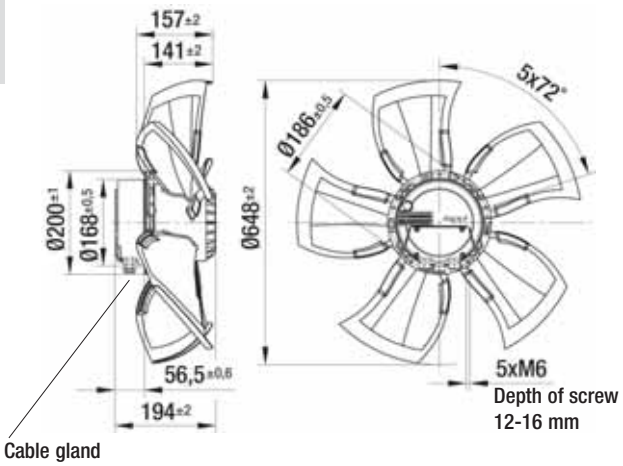

With full square nozzle

Type	Mass [kg]
W3G 650-CE34 -01	21.5
W3G 650-CE44 -06	21.5
W3G 650-CE35 -01	21.5

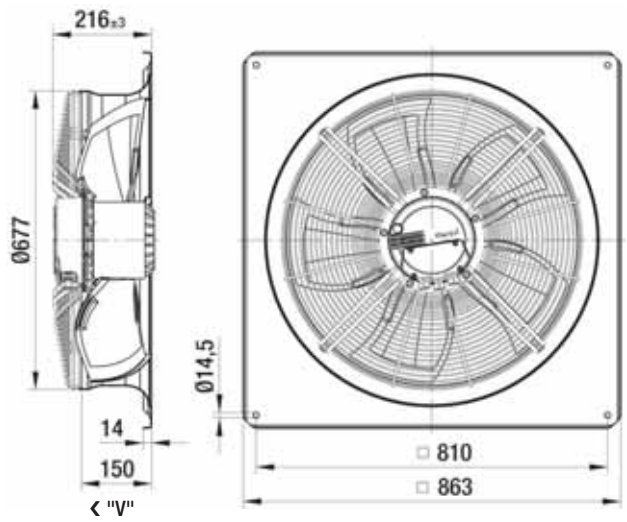

With guard grille for full nozzle

Type	Mass [kg]
S3G 650-BE34 -11	13.1
S3G 650-BE44 -06	13.1
S3G 650-BE35 -01	13.1

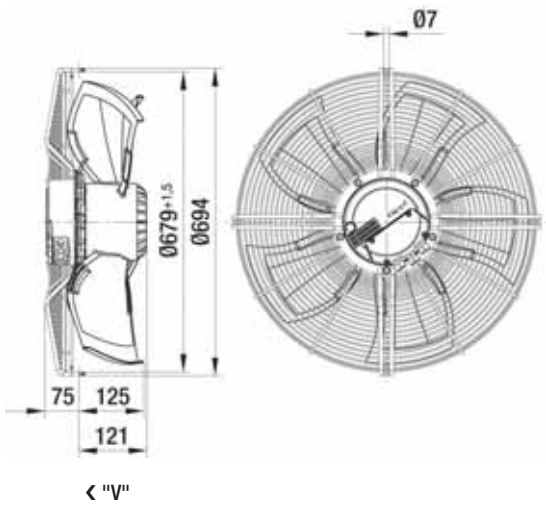

ebmpapst

With guard grille for short nozzle

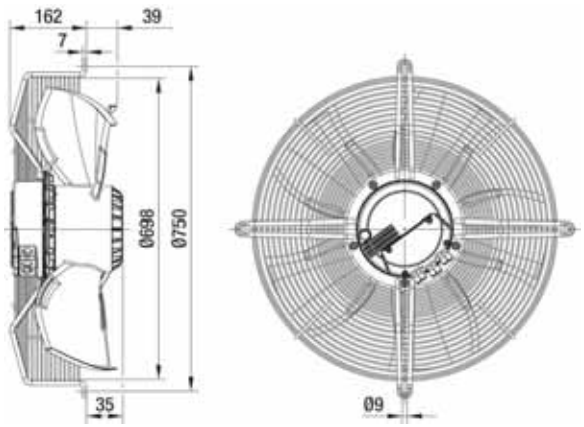

‹ "V"

Type	Mass [kg]
S3G 650-AE34 -11	14.7
S3G 650-AE44 -08	14.7
S3G 650-AE35 -01	14.7

EC axial fans mains-powered

S series, Ø 650

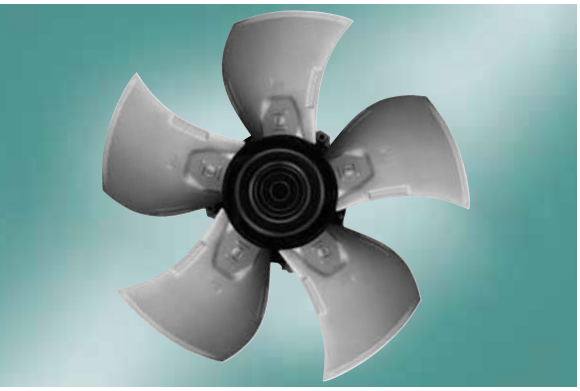

- **Material:** Guard grille: Steel, phosphated and coated in black plastic
  Wall ring: Sheet steel, pre-galvanised and coated in black plastic
  Blades: Die-cast aluminium
  Rotor: Cast-in with PA plastic
  Electronics enclosure: Die-cast aluminium, coated in black
- **Number of blades:** 5
- **Direction of rotation:** Dir. of air flow "V" clockwise, "A" counter-clockwise, seen on rotor
- **Type of protection:** IP 54 (acc. to EN 60529)
- **Insulation class:** "F"
- **Mounting position:** Shaft horizontal or rotor on bottom; rotor on top on request
- **Condensate discharges:** Rotor-side
- **Mode of operation:** Continuous operation (S1)
- **Bearings:** Maintenance-free ball bearings

Nominal data		Blade angle	Curve		Nominal voltage range	Frequency	Speed/rpm	Max. power input (1)	Max. current draw (1)	Max. operative range	Perm. amb. temp.	Electr. connection
Type	**Motor**				**VAC**	**Hz**	**rpm**	**kW**	**A**	**Pa**	**°C**	p. 428
***3G 650**	M3G 150-FF	-5°	A	3~	200-240	50/60	1250	1.65	5.20	240	-25 to +60	M)
***3G 650**	M3G 150-FF	-5°	B	3~	380-480	50/60	1250	1.65	2.60	240	-25 to +60	M)

subject to alterations

(1) Nominal data in operating point with maximum load and 200 or 400 VAC

Curves

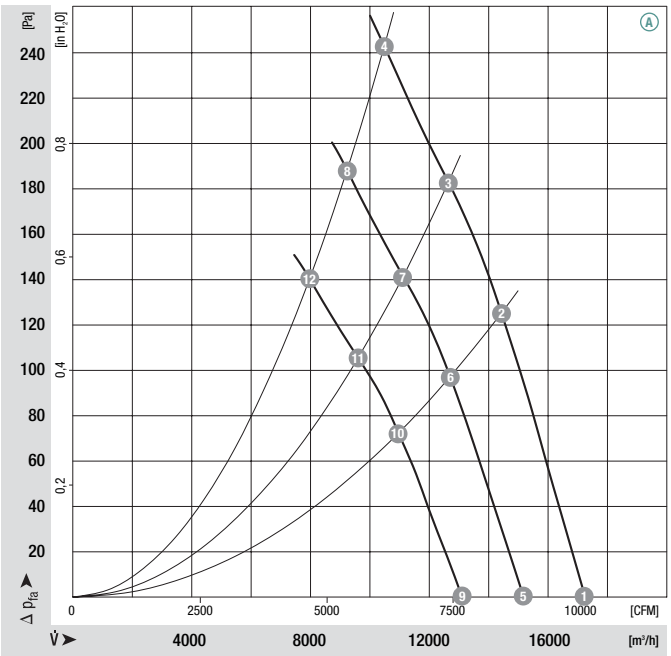

	n [rpm]	P_1 [kW]	I [A]	Lw_A [dB(A)]	η_{tL} [%]
A 1	1250	1.07	3.20	78	—
A 2	1250	1.38	4.20	78	82
A 3	1250	1.52	4.60	80	71
A 4	1250	1.65	5.20	83	59
A 5	1100	0.73	2.20	76	—
A 6	1100	0.94	2.80	75	82
A 7	1100	1.03	3.20	77	71
A 8	1100	1.12	3.40	80	59
A 9	950	0.47	1.40	72	—
A 10	950	0.60	1.80	72	82
A 11	950	0.67	2.00	74	71
A 12	950	0.72	2.20	77	59

ebmpapst

- **Technical features:**
  - PFC (passive)
  - Integrated PID controller
  - Control input 0-10 VDC / PWM
  - Input for sensor 0-10 V or 4-20 mA
  - Slave output 0-10 V max. 3 mA
  - Output 20 VDC (±20 %) max. 50 mA
  - Output 10 VDC (+10 %) max. 10 mA
  - RS485 ebmBUS
  - Alarm relay
  - Line undervoltage / phase failure detection
  - Motor current limitation
  - Over-temperature protected electronics / motor
  - Locked rotor protection
  - Soft start
- **EMC:** Interference emission acc. to EN 61000-6-3
  Interference immunity acc. to EN 61000-6-2
  Harmonics acc. to EN 61000-3-2/3
- **Leakage current:** < 3.5 mA acc. to EN 61800-5-1
- **Connection leads:** Via terminal strip
- **Protection class:** I (acc. to EN 61800-5-1)
- **Product conforming to standard:** CE
- **Approvals:** UL, CSA, GOST; (B) also VDE

Direction of air flow

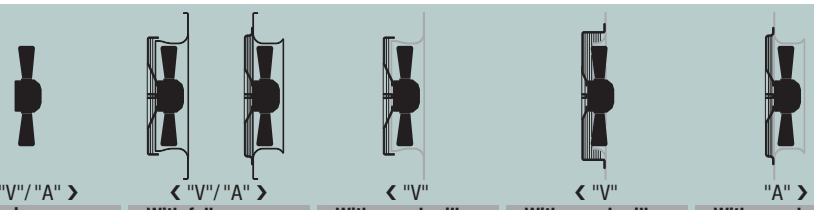

	Without attachments	With full square nozzle	With guard grille for full nozzle	With guard grille for short nozzle	With guard grille for full nozzle
"V"	A3G 650-AJ12 -13	W3G 650-CJ12 -13	S3G 650-BJ12 -13	—	—
"A"	A3G 650-AJ12 -14	W3G 650-CJ12 -14	—	—	S3G 650-CJ12 -14
"V"	A3G 650-AJ08 -03	W3G 650-CJ08 -03	S3G 650-BJ08 -03	—	—
"A"	A3G 650-AJ08 -04	W3G 650-CJ08 -04	—	—	S3G 650-CJ08 -04

Curves

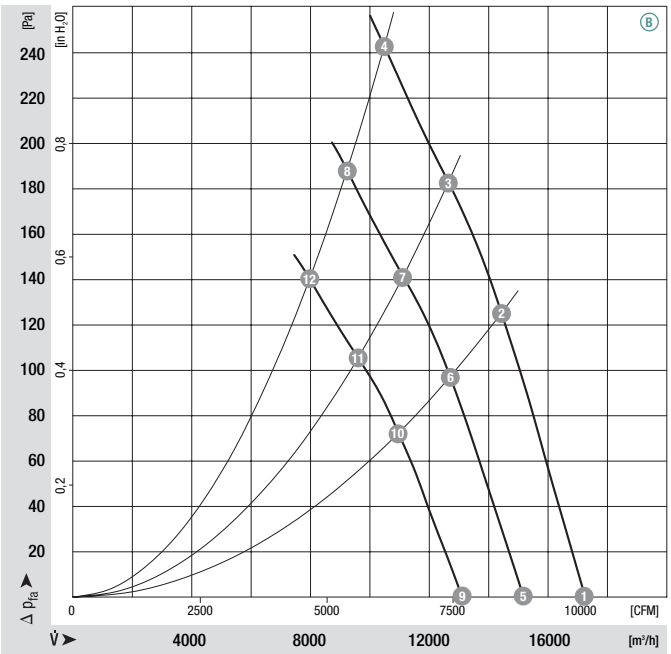

		n [rpm]	P_1 [kW]	I [A]	Lw_A [dB(A)]	η_{tL} [%]
B	1	1250	1.07	1.60	78	—
B	2	1250	1.38	2.10	78	82
B	3	1250	1.52	2.30	80	71
B	4	1250	1.65	2.60	83	59
B	5	1100	0.73	1.10	76	—
B	6	1100	0.94	1.40	75	82
B	7	1100	1.03	1.60	77	71
B	8	1100	1.12	1.70	80	59
B	9	950	0.47	0.70	72	—
B	10	950	0.60	0.90	72	82
B	11	950	0.67	1.00	74	71
B	12	950	0.72	1.10	77	59

Drawings p. 262 ff.

Electr. connection p. 428

EC axial fans mains-powered

S series, Ø 650

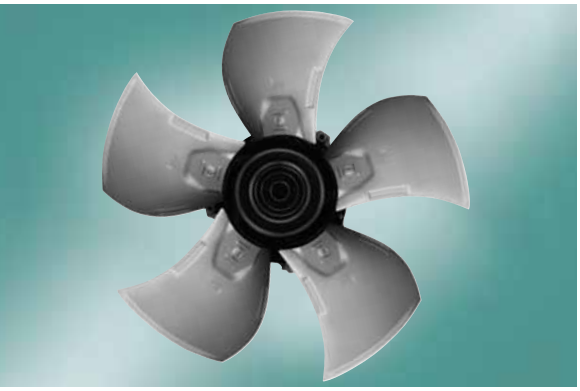

- **Material:** Guard grille: Steel, phosphated and coated in black plastic
  Wall ring: Sheet steel, pre-galvanised and coated in black plastic
  Blades: Die-cast aluminium
  Rotor: Cast-in with PA plastic
  Electronics enclosure: Die-cast aluminium, coated in black
- **Number of blades:** 5
- **Direction of rotation:** Dir. of air flow "V" clockwise, "A" counter-clockwise, seen on rotor
- **Type of protection:** IP 54 (acc. to EN 60529)
- **Insulation class:** "F"
- **Mounting position:** Shaft horizontal or rotor on bottom; rotor on top on request
- **Condensate discharges:** Rotor-side
- **Mode of operation:** Continuous operation (S1)
- **Bearings:** Maintenance-free ball bearings

Nominal data		Blade angle	Curve		Nominal voltage range	Frequency	Speed/rpm	Max. power input (1)	Max. current draw (1)	Max. operative range	Perm. amb. temp.	Electr. connection
Type	**Motor**				**VAC**	**Hz**	**rpm**	**kW**	**A**	**Pa**	**°C**	p. 428
***3G 650**	M3G 150-IF	-5°	A	3~	200-240	50/60	1500	2.87	8.80	350	-25 to +60	M)
***3G 650**	M3G 150-IF	-5°	B	3~	380-480	50/60	1500	2.87	4.40	350	-25 to +60	M)

subject to alterations

(1) Nominal data in operating point with maximum load and 200 or 400 VAC

Curves

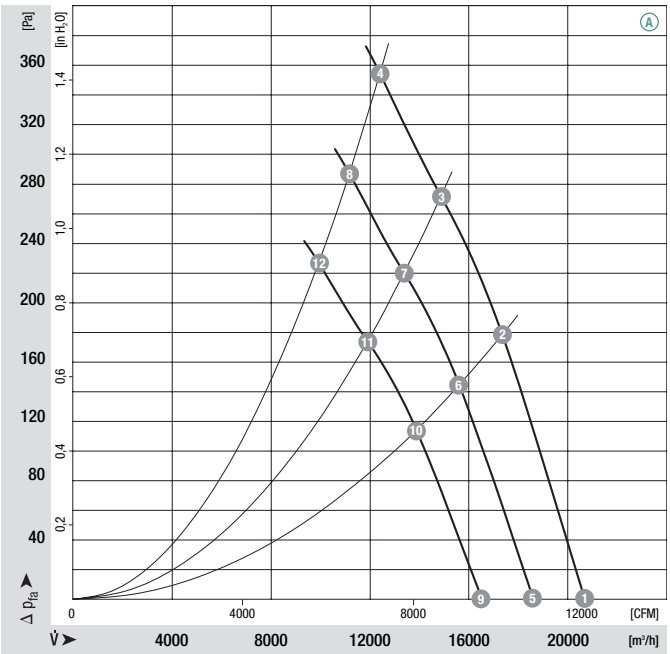

	n [rpm]	P_1 [kW]	I [A]	Lw_A [dB(A)]	η_{tL} [%]
A 1	1500	1.86	5.60	82	—
A 2	1500	2.37	7.20	82	82
A 3	1500	2.65	8.00	84	70
A 4	1500	2.87	8.80	87	59
A 5	1350	1.35	4.20	80	—
A 6	1350	1.73	5.20	80	82
A 7	1350	1.93	5.80	82	70
A 8	1350	2.09	6.40	85	59
A 9	1200	0.95	3.00	78	—
A 10	1200	1.21	3.60	77	82
A 11	1200	1.35	4.20	79	70
A 12	1200	1.47	4.40	82	59

ebmpapst

- **Technical features:**
  - PFC (passive)
  - Integrated PID controller
  - Control input 0-10 VDC / PWM
  - Input for sensor 0-10 V or 4-20 mA
  - Slave output 0-10 V max. 3 mA
  - Output 20 VDC (±20 %) max. 50 mA
  - Output 10 VDC (+10 %) max. 10 mA
  - RS485 ebmBUS
  - Alarm relay
  - Line undervoltage / phase failure detection
  - Motor current limitation
  - Over-temperature protected electronics / motor
  - Locked rotor protection
  - Soft start
- **EMC:** Interference emission acc. to EN 61000-6-3
  Interference immunity acc. to EN 61000-6-2
  Harmonics acc. to EN 61000-3-2/3
- **Leakage current:** < 3.5 mA acc. to EN 61800-5-1
- **Connection leads:** Via terminal strip
- **Protection class:** I (acc. to EN 61800-5-1)
- **Product conforming to standard:** CE
- **Approvals:** UL, CSA, GOST; (B) also VDE

Direction of air flow

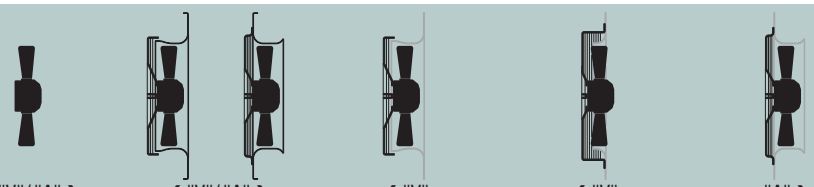

	❮ "V"/"A" ❯ Without attachments	❮ "V"/"A" ❯ With full square nozzle	❮ "V" With guard grille for full nozzle	❮ "V" With guard grille for short nozzle	"A" ❯ With guard grille for full nozzle
"V"	A3G 650-AK07 -13	W3G 650-CK07 -13	S3G 650-BK07 -13	—	—
"A"	A3G 650-AK07 -14	W3G 650-CK07 -14	—	—	S3G 650-CK07 -14
"V"	A3G 650-AK02 -03	W3G 650-CK02 -03	S3G 650-BK02 -03	—	—
"A"	A3G 650-AK02 -04	W3G 650-CK02 -04	—	—	S3G 650-CK02 -04

Curves

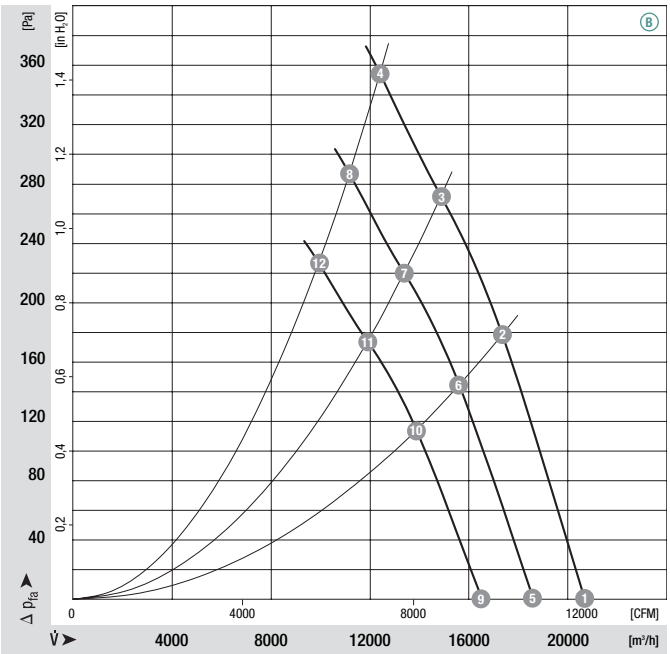

	n [rpm]	P_1 [kW]	I [A]	Lw_A [dB(A)]	η_{tL} [%]
(B) 1	1500	1.86	2.80	82	—
(B) 2	1500	2.37	3.60	82	82
(B) 3	1500	2.65	4.00	84	70
(B) 4	1500	2.87	4.40	87	59
(B) 5	1350	1.35	2.10	80	—
(B) 6	1350	1.73	2.60	80	82
(B) 7	1350	1.93	2.90	82	70
(B) 8	1350	2.09	3.20	85	59
(B) 9	1200	0.95	1.50	78	—
(B) 10	1200	1.21	1.80	77	82
(B) 11	1200	1.35	2.10	79	70
(B) 12	1200	1.47	2.20	82	59

Drawings p. 262 ff.

Electr. connection p. 428

EC axial fans mains-powered

S series, Ø 650, drawings for direction of air flow "V"

Without attachments

Type	Mass [kg]
A3G 650-AJ12 -13	23.5
A3G 650-AJ08 -03	23.5
A3G 650-AK07 -13	26.5
A3G 650-AK02 -03	26.5

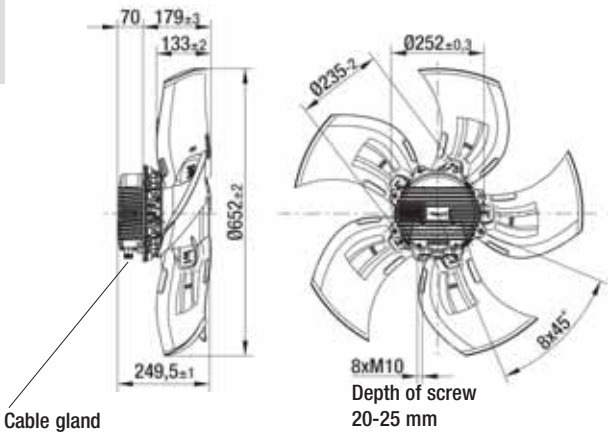

‹ "V"

With full square nozzle

Type	Mass [kg]
W3G 650-CJ12 -13	40.0
W3G 650-CJ08 -03	40.0
W3G 650-CK07 -13	43.0
W3G 650-CK02 -03	43.0

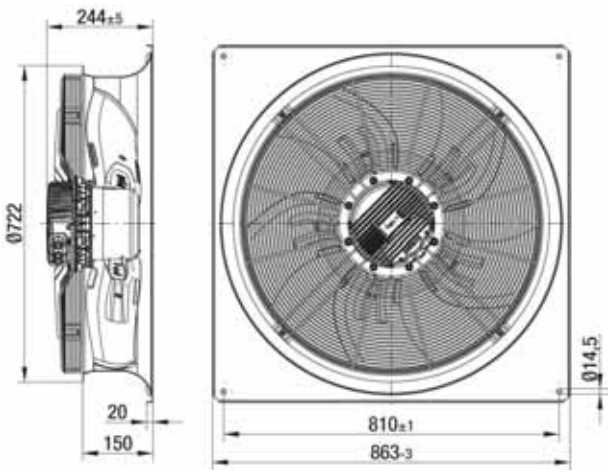

‹ "V"

With guard grille for full nozzle

Type	Mass [kg]
S3G 650-BJ12 -13	28.5
S3G 650-BJ08 -03	28.5
S3G 650-BK07 -13	31.5
S3G 650-BK02 -03	31.5

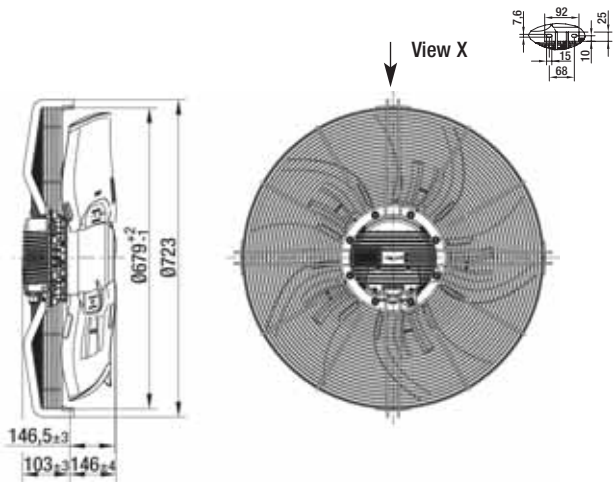

‹ "V"

ebmpapst

EC axial fans mains-powered

S series, Ø 650, drawings for direction of air flow "A"

Without attachments

Type	Mass [kg]
A3G 650-AJ12 -14	23.5
A3G 650-AJ08 -04	23.5
A3G 650-AK07 -14	26.5
A3G 650-AK02 -04	26.5

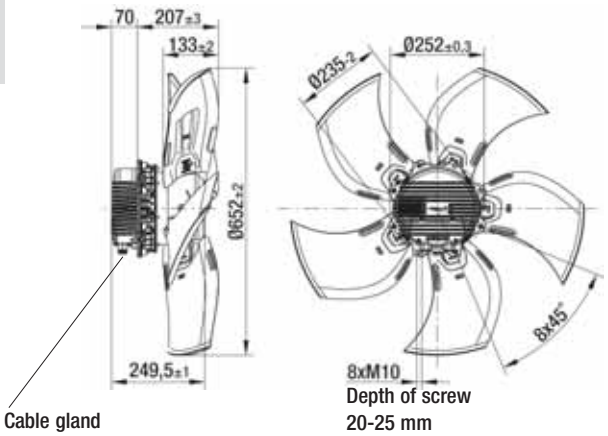

"A" ›

With full square nozzle

Type	Mass [kg]
W3G 650-CJ12 -14	41.0
W3G 650-CJ08 -04	41.0
W3G 650-CK07 -14	44.0
W3G 650-CK02 -04	44.0

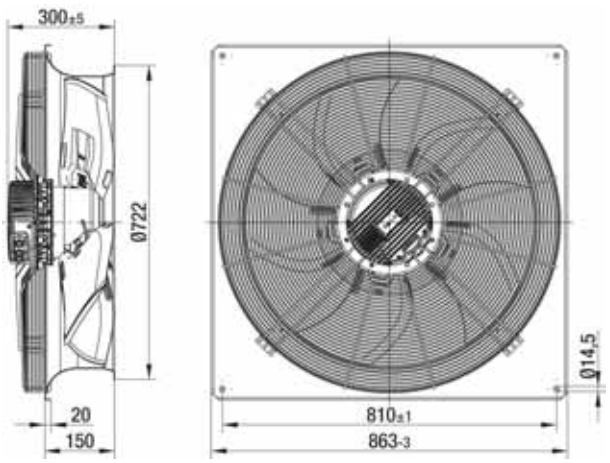

"A" ›

With guard grille for full nozzle

Type	Mass [kg]
S3G 650-CJ12 -14	29.5
S3G 650-CJ08 -04	29.5
S3G 650-CK07 -14	32.5
S3G 650-CK02 -04	32.5

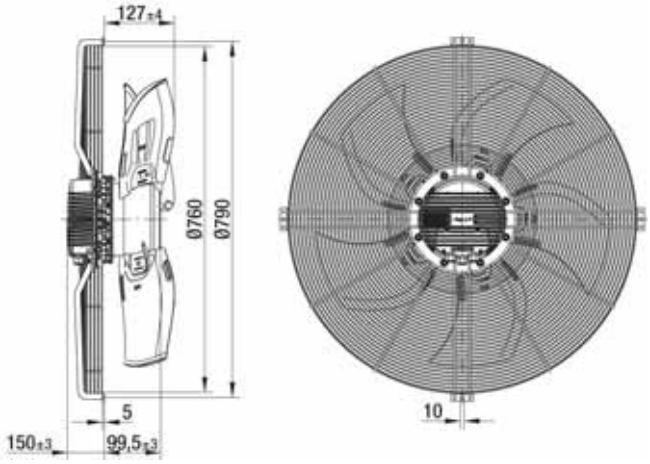

"A" ›

ebmpapst

EC axial fans mains-powered

S series, Ø 710

- **Material:** Guard grille: Steel, phosphated and coated in black plastic
  Wall ring: Sheet steel, pre-galvanised and coated in black plastic
  Blades: Die-cast aluminium
  Rotor: Cast-in with PA plastic
  Electronics enclosure: Die-cast aluminium, coated in black
- **Number of blades:** 5
- **Direction of rotation:** Dir. of air flow "V" clockwise, "A" counter-clockwise, seen on rotor
- **Type of protection:** IP 54 (acc. to EN 60529)
- **Insulation class:** "F"
- **Mounting position:** Shaft horizontal or rotor on bottom; rotor on top on request
- **Condensate discharges:** Rotor-side
- **Mode of operation:** Continuous operation (S1)
- **Bearings:** Maintenance-free ball bearings

Nominal data		Blade angle	Curve	Nominal voltage range	Frequency	Speed/rpm	Max. power input (1)	Max. current draw (1)	Max. operative range	Perm. amb. temp.	Electr. connection
Type	**Motor**			**VAC**	**Hz**	**rpm**	**kW**	**A**	**Pa**	**°C**	p. 428
***3G 710**	M3G 150-FF	0°	A	3~ 200-240	50/60	1050	1.68	5.20	160	-25 to +60	M)
***3G 710**	M3G 150-FF	0°	B	3~ 380-480	50/60	1050	1.68	2.60	160	-25 to +60	M)

subject to alterations

(1) Nominal data in operating point with maximum load and 200 or 400 VAC

Curves

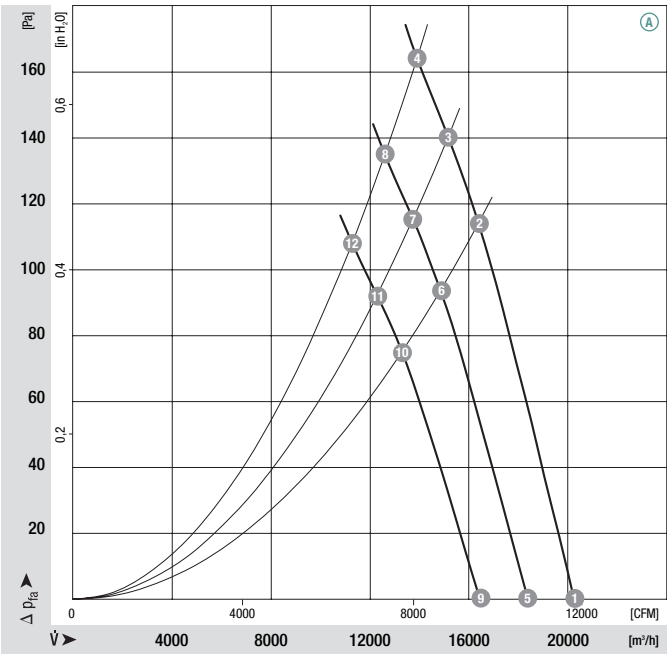

	n [rpm]	P_1 [kW]	I [A]	Lw_A [dB(A)]	η_{tL} [%]
A 1	1050	1.26	3.80	76	—
A 2	1050	1.57	4.80	76	73
A 3	1050	1.63	5.00	77	68
A 4	1050	1.68	5.20	79	63
A 5	950	0.94	2.80	74	—
A 6	950	1.17	3.60	74	73
A 7	950	1.22	3.80	75	68
A 8	950	1.25	3.80	77	63
A 9	850	0.67	2.00	72	—
A 10	850	0.84	2.60	72	73
A 11	850	0.87	2.60	73	68
A 12	850	0.90	2.80	74	63

ebmpapst

- **Technical features:**
  - PFC (passive)
  - Integrated PID controller
  - Control input 0-10 VDC / PWM
  - Input for sensor 0-10 V or 4-20 mA
  - Slave output 0-10 V max. 3 mA
  - Output 20 VDC (±20 %) max. 50 mA
  - Output 10 VDC (+10 %) max. 10 mA
  - RS485 ebmBUS
  - Alarm relay
  - Line undervoltage / phase failure detection
  - Motor current limitation
  - Over-temperature protected electronics / motor
  - Locked rotor protection
  - Soft start
- **EMC:** Interference emission acc. to EN 61000-6-3
  Interference immunity acc. to EN 61000-6-2
  Harmonics acc. to EN 61000-3-2/3
- **Leakage current:** < 3.5 mA acc. to EN 61800-5-1
- **Connection leads:** Via terminal strip
- **Protection class:** I (acc. to EN 61800-5-1)
- **Product conforming to standard:** CE
- **Approvals:** UL, CSA, GOST; (B) also VDE

Direction of air flow

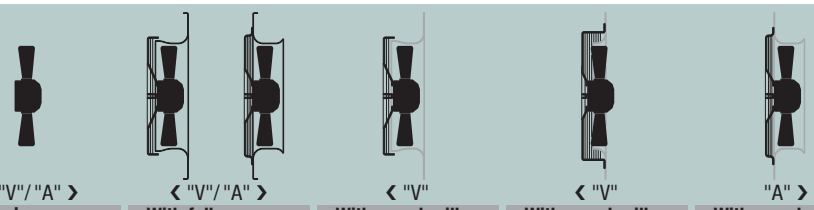

	Without attachments	With full square nozzle	With guard grille for full nozzle	With guard grille for short nozzle	With guard grille for full nozzle
"V"	A3G 710-AG09 -13	W3G 710-CG09 -13	S3G 710-BG09 -13	S3G 710-AG09 -13	—
"A"	A3G 710-AG09 -14	W3G 710-CG09 -14	—	—	S3G 710-CG09 -14
"V"	A3G 710-AG01 -03	W3G 710-CG01 -03	S3G 710-BG01 -03	S3G 710-AG01 -03	—
"A"	A3G 710-AG01 -04	W3G 710-CG01 -04	—	—	S3G 710-CG01 -04

Curves

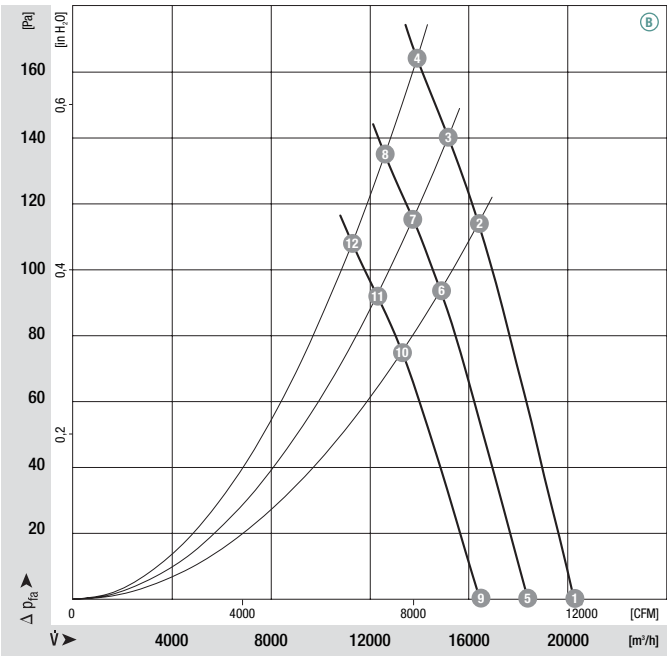

	n [rpm]	P_1 [kW]	I [A]	Lw_A [dB(A)]	η_{tL} [%]
(B) 1	1050	1.26	1.90	76	—
(B) 2	1050	1.57	2.40	76	73
(B) 3	1050	1.63	2.50	77	68
(B) 4	1050	1.68	2.60	79	63
(B) 5	950	0.94	1.40	74	—
(B) 6	950	1.17	1.80	74	73
(B) 7	950	1.22	1.90	75	68
(B) 8	950	1.25	1.90	77	63
(B) 9	850	0.67	1.00	72	—
(B) 10	850	0.84	1.30	72	73
(B) 11	850	0.87	1.30	73	68
(B) 12	850	0.90	1.40	74	63

Drawings p. 270 ff.

Electr. connection p. 428

EC axial fans mains-powered

S series, Ø 710

- **Material:** Guard grille: Steel, phosphated and coated in black plastic
  Wall ring: Sheet steel, pre-galvanised and coated in black plastic
  Blades: Die-cast aluminium
  Rotor: Cast-in with PA plastic
  Electronics enclosure: Die-cast aluminium, coated in black
- **Number of blades:** 5
- **Direction of rotation:** Dir. of air flow "V" clockwise, "A" counter-clockwise, seen on rotor
- **Type of protection:** IP 54 (acc. to EN 60529)
- **Insulation class:** "F"
- **Mounting position:** Shaft horizontal or rotor on bottom; rotor on top on request
- **Condensate discharges:** Rotor-side
- **Mode of operation:** Continuous operation (S1)
- **Bearings:** Maintenance-free ball bearings

Nominal data		Blade angle	Curve	Nominal voltage range	Frequency	Speed/rpm	Max. power input (1)	Max. current draw (1)	Max. operative range	Perm. amb. temp.	Electr. connection
Type	**Motor**			**VAC**	**Hz**	**rpm**	**kW**	**A**	**Pa**	**°C**	p. 428
***3G 710**	M3G 150-IF	0°	A	3~ 200-240	50/60	1240	2.75	8.50	255	-25 to +60	M)
***3G 710**	M3G 150-IF	0°	B	3~ 380-480	50/60	1240	2.75	4.20	255	-25 to +60	M)

subject to alterations

(1) Nominal data in operating point with maximum load and 200 or 400 VAC

Curves

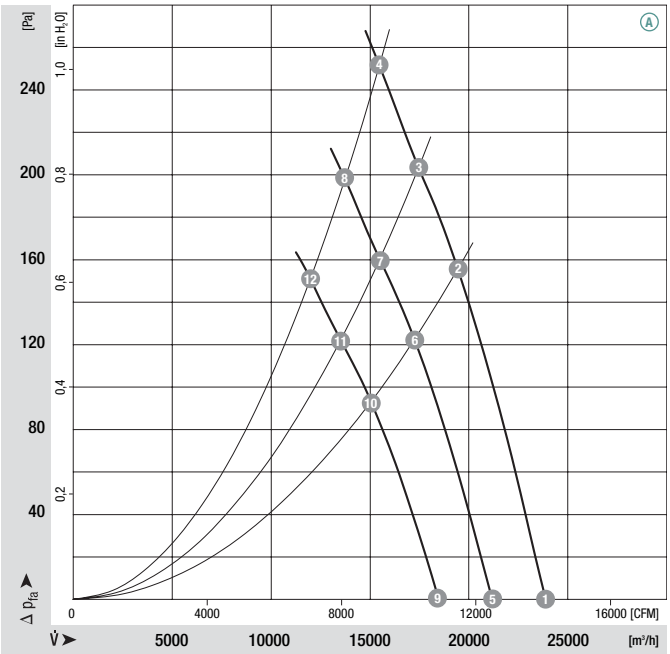

	n [rpm]	P_1 [kW]	I [A]	Lw_A [dB(A)]	η_{tL} [%]
A 1	1240	1.99	6.00	80	—
A 2	1240	2.47	7.50	80	74
A 3	1240	2.59	7.80	81	67
A 4	1240	2.70	8.40	84	61
A 5	1100	1.39	4.20	77	—
A 6	1100	1.72	5.20	77	74
A 7	1100	1.81	5.40	79	67
A 8	1100	1.89	5.60	82	61
A 9	960	0.92	2.80	74	—
A 10	960	1.15	3.40	74	74
A 11	960	1.20	3.60	76	67
A 12	960	1.25	3.80	79	61

ebmpapst

- **Technical features:**
  - PFC (passive)
  - Integrated PID controller
  - Control input 0-10 VDC / PWM
  - Input for sensor 0-10 V or 4-20 mA
  - Slave output 0-10 V max. 3 mA
  - Output 20 VDC (±20 %) max. 50 mA
  - Output 10 VDC (+10 %) max. 10 mA
  - RS485 ebmBUS
  - Alarm relay
  - Line undervoltage / phase failure detection
  - Motor current limitation
  - Over-temperature protected electronics / motor
  - Locked rotor protection
  - Soft start
- **EMC:** Interference emission acc. to EN 61000-6-3
  Interference immunity acc. to EN 61000-6-2
  Harmonics acc. to EN 61000-3-2/3
- **Leakage current:** < 3.5 mA acc. to EN 61800-5-1
- **Connection leads:** Via terminal strip
- **Protection class:** I (acc. to EN 61800-5-1)
- **Product conforming to standard:** CE
- **Approvals:** UL, CSA, GOST; (B) also VDE

Direction of air flow

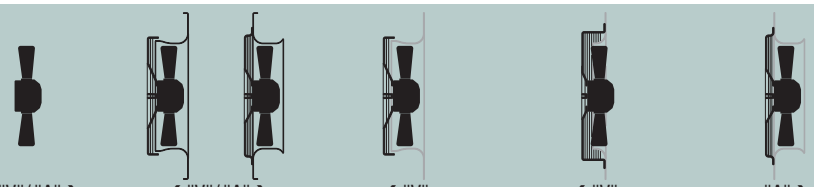

	❮ "V"/"A" ❯ Without attachments	❮ "V"/"A" ❯ With full square nozzle	❮ "V" With guard grille for full nozzle	❮ "V" With guard grille for short nozzle	"A" ❯ With guard grille for full nozzle
"V"	A3G 710-AH10 -13	W3G 710-CH10 -13	S3G 710-BH10 -13	S3G 710-AH10 -13	—
"A"	A3G 710-AH10 -14	W3G 710-CH10 -14	—	—	S3G 710-CH10 -14
"V"	A3G 710-AH06 -03	W3G 710-CH06 -03	S3G 710-BH06 -03	S3G 710-AH06 -03	—
"A"	A3G 710-AH06 -04	W3G 710-CH06 -04	—	—	S3G 710-CH06 -04

Curves

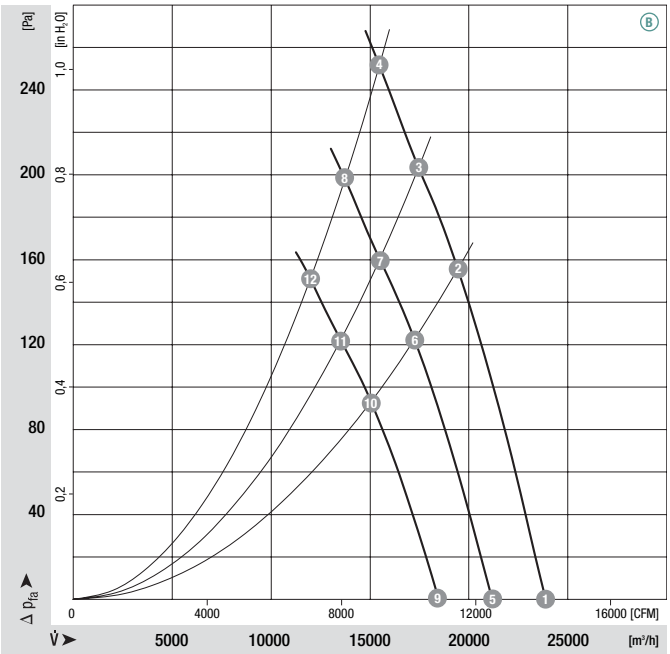

	n [rpm]	P_1 [kW]	I [A]	Lw_A [dB(A)]	η_{tL} [%]
(B) 1	1240	1.99	3.00	80	—
(B) 2	1240	2.47	3.70	80	74
(B) 3	1240	2.59	3.90	81	67
(B) 4	1240	2.70	4.20	84	61
(B) 5	1100	1.39	2.10	77	—
(B) 6	1100	1.72	2.60	77	74
(B) 7	1100	1.81	2.70	79	67
(B) 8	1100	1.89	2.80	82	61
(B) 9	960	0.92	1.40	74	—
(B) 10	960	1.15	1.70	74	74
(B) 11	960	1.20	1.80	76	67
(B) 12	960	1.25	1.90	79	61

Drawings p. 270 ff.

Electr. connection p. 428

EC axial fans mains-powered

S series, Ø 710, drawings for direction of air flow "V"

Without attachments

Type	Mass [kg]
A3G 710-AG09 -13	24.0
A3G 710-AG01 -03	24.0
A3G 710-AH10 -13	27.0
A3G 710-AH06 -03	27.0

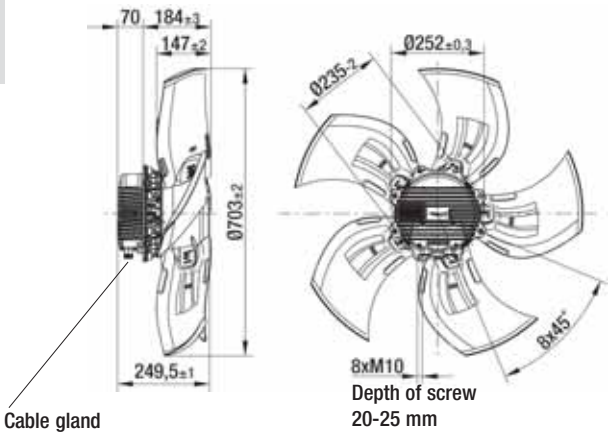

‹ "V"

With full square nozzle

Type	Mass [kg]
W3G 710-CG09 -13	43.5
W3G 710-CG01 -03	43.5
W3G 710-CH10 -13	46.5
W3G 710-CH06 -03	46.5

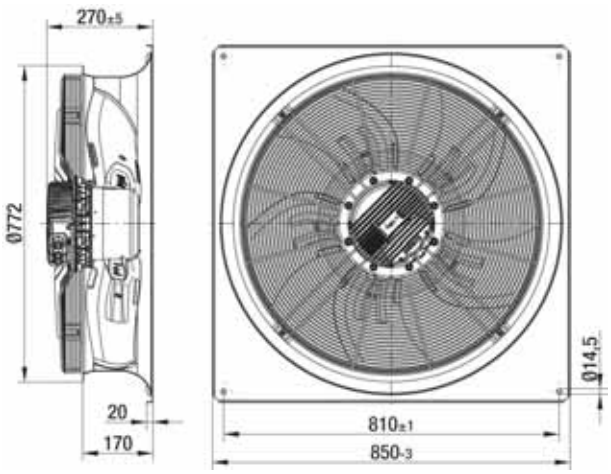

‹ "V"

With guard grille for full nozzle

Type	Mass [kg]
S3G 710-BG09 -13	29.5
S3G 710-BG01 -03	29.5
S3G 710-BH10 -13	32.5
S3G 710-BH06 -03	32.5

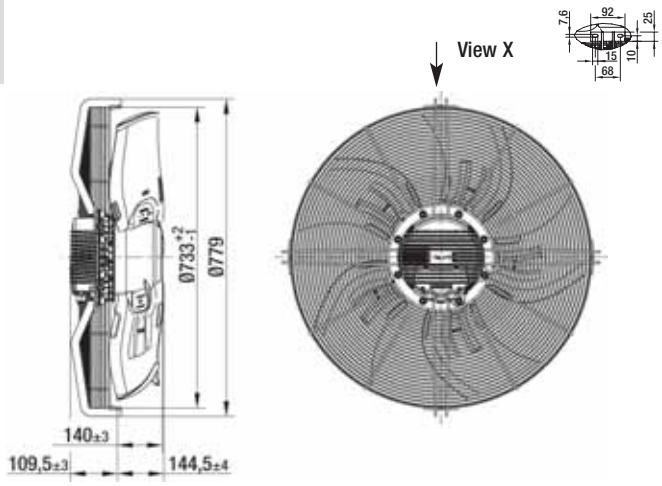

‹ "V"

ebmpapst

With guard grille for short nozzle

Type	Mass [kg]
S3G 710-AG09 -13	28.0
S3G 710-AG01 -03	28.0
S3G 710-AH10 -13	31.0
S3G 710-AH06 -03	31.0

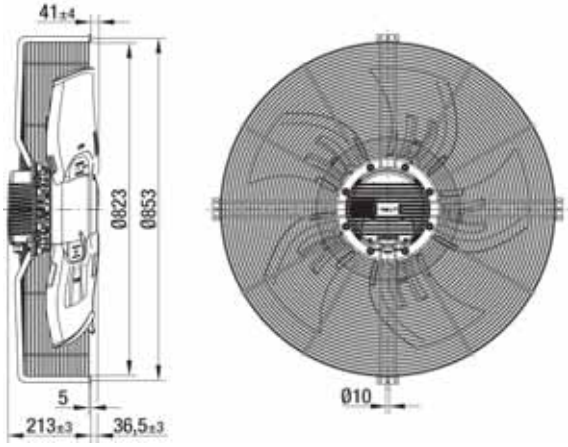

< "V"

EC axial fans mains-powered

S series, Ø 710, drawings for direction of air flow "A"

Without attachments

Type	Mass [kg]
A3G 710-AG09 -14	24.0
A3G 710-AG01 -04	24.0
A3G 710-AH10 -14	27.0
A3G 710-AH06 -04	27.0

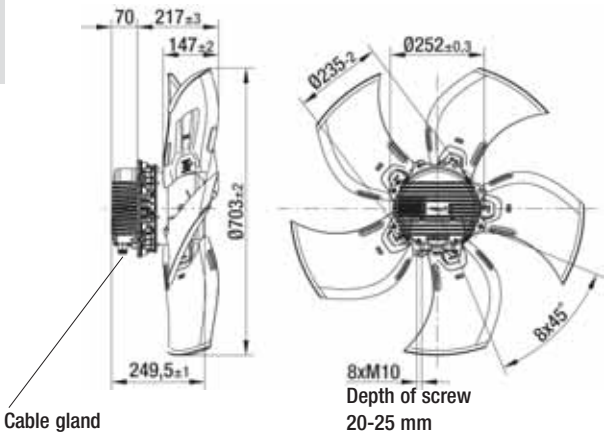

"A" ›

With full square nozzle

Type	Mass [kg]
W3G 710-CG09 -14	44.5
W3G 710-CG01 -04	44.5
W3G 710-CH10 -14	47.5
W3G 710-CH06 -04	47.5

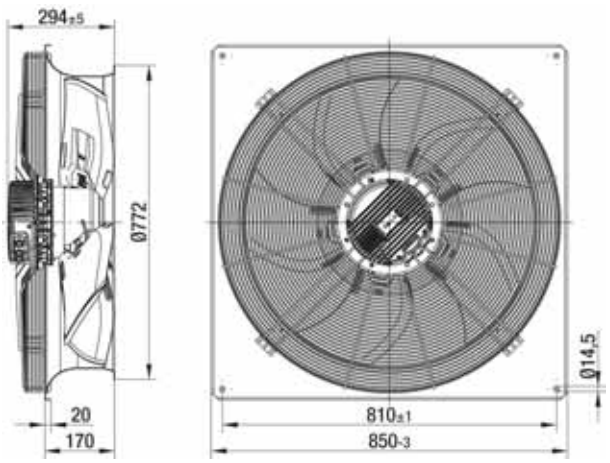

"A" ›

With guard grille for full nozzle

Type	Mass [kg]
S3G 710-CG09 -14	30.5
S3G 710-CG01 -04	30.5
S3G 710-CH10 -14	33.5
S3G 710-CH06 -04	33.5

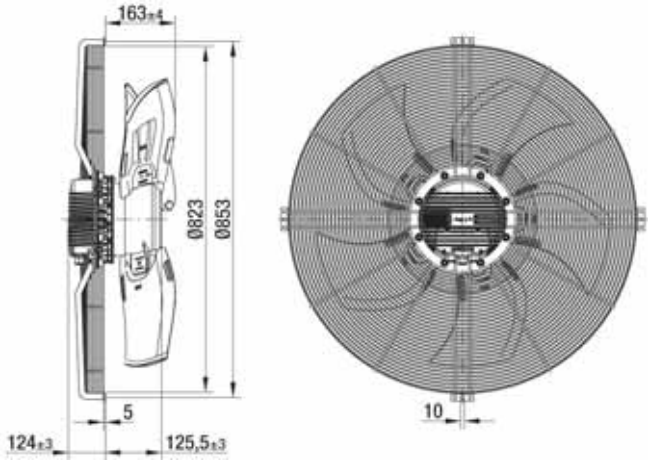

"A" ›

ebmpapst

EC axial fans mains-powered

S series, Ø 800

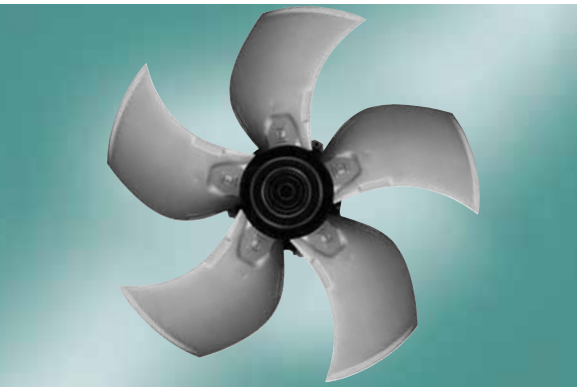

- **Material:** Guard grille: Steel, phosphated and coated in black plastic
  Wall ring: Sheet steel, pre-galvanised and coated in black plastic
  Blades: Die-cast aluminium
  Rotor: Cast-in with PA plastic
  Electronics enclosure: Die-cast aluminium, coated in black
- **Number of blades:** 5
- **Direction of rotation:** Dir. of air flow "V" clockwise, "A" counter-clockwise, seen on rotor
- **Type of protection:** IP 54 (acc. to EN 60529)
- **Insulation class:** "F"
- **Mounting position:** Shaft horizontal or rotor on bottom; rotor on top on request
- **Condensate discharges:** Rotor-side
- **Mode of operation:** Continuous operation (S1)
- **Bearings:** Maintenance-free ball bearings

Nominal data		Blade angle	Curve	Nominal voltage range	Frequency	Speed/rpm	Max. power input (1)	Max. current draw (1)	Max. operative range	Perm. amb. temp.	Electr. connection
Type	**Motor**			**VAC**	**Hz**	**rpm**	**kW**	**A**	**Pa**	**°C**	p. 428
***3G 800**	M3G 150-FF	0°	A	3~ 200-240	50/60	830	1.35	4.40	155	-25 to +60	M)
***3G 800**	M3G 150-FF	0°	B	3~ 380-480	50/60	830	1.35	2.20	155	-25 to +60	M)

subject to alterations

(1) Nominal data in operating point with maximum load and 200 or 400 VAC

Curves

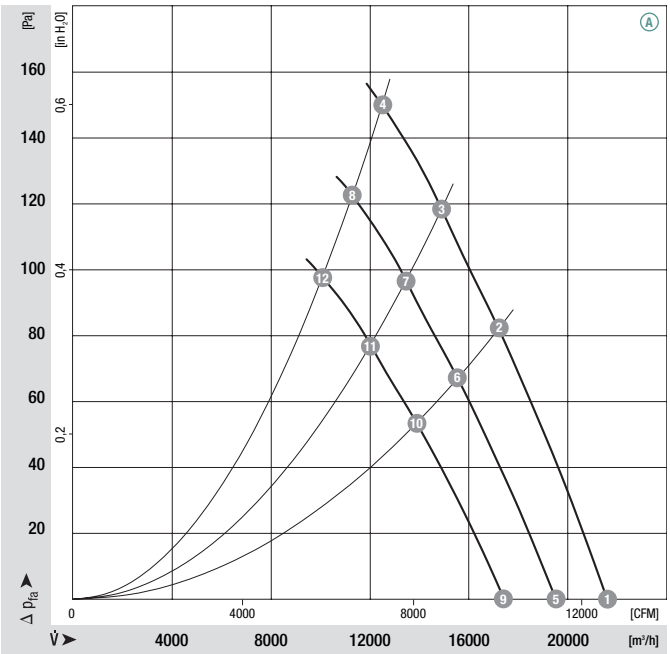

	n [rpm]	P_1 [kW]	I [A]	Lw_A [dB(A)]	η_{tL} [%]
A 1	830	0.88	2.80	72	—
A 2	830	1.13	3.40	70	75
A 3	830	1.24	3.80	72	67
A 4	830	1.35	4.40	77	57
A 5	750	0.65	2.00	69	—
A 6	750	0.83	2.60	68	75
A 7	750	0.91	2.80	70	67
A 8	750	0.99	3.00	75	57
A 9	670	0.46	1.40	67	—
A 10	670	0.60	1.80	66	75
A 11	670	0.65	2.00	68	67
A 12	670	0.71	2.20	72	57

ebmpapst

- **Technical features:**
  - PFC (passive)
  - Integrated PID controller
  - Control input 0-10 VDC / PWM
  - Input for sensor 0-10 V or 4-20 mA
  - Slave output 0-10 V max. 3 mA
  - Output 20 VDC (±20 %) max. 50 mA
  - Output 10 VDC (+10 %) max. 10 mA
  - RS485 ebmBUS
  - Alarm relay
  - Line undervoltage / phase failure detection
  - Motor current limitation
  - Over-temperature protected electronics / motor
  - Locked rotor protection
  - Soft start
- **EMC:** Interference emission acc. to EN 61000-6-3
  Interference immunity acc. to EN 61000-6-2
  Harmonics acc. to EN 61000-3-2/3
- **Leakage current:** < 3.5 mA acc. to EN 61800-5-1
- **Connection leads:** Via terminal strip
- **Protection class:** I (acc. to EN 61800-5-1)
- **Product conforming to standard:** CE
- **Approvals:** UL, CSA, GOST; (B) also VDE

Direction of air flow

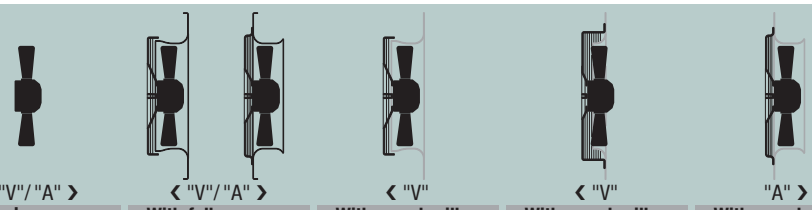

	Without attachments	With full square nozzle	With guard grille for full nozzle	With guard grille for short nozzle	With guard grille for full nozzle
"V"	A3G 800-AG10 -13	W3G 800-CG10 -13	S3G 800-BG10 -13	S3G 800-AG10 -13	—
"A"	A3G 800-AG10 -14	W3G 800-CG10 -14	—	—	S3G 800-CG10 -14
"V"	A3G 800-AG02 -03	W3G 800-CG02 -03	S3G 800-BG02 -03	S3G 800-AG02 -03	—
"A"	A3G 800-AG02 -04	W3G 800-CG02 -04	—	—	S3G 800-CG02 -04

Curves

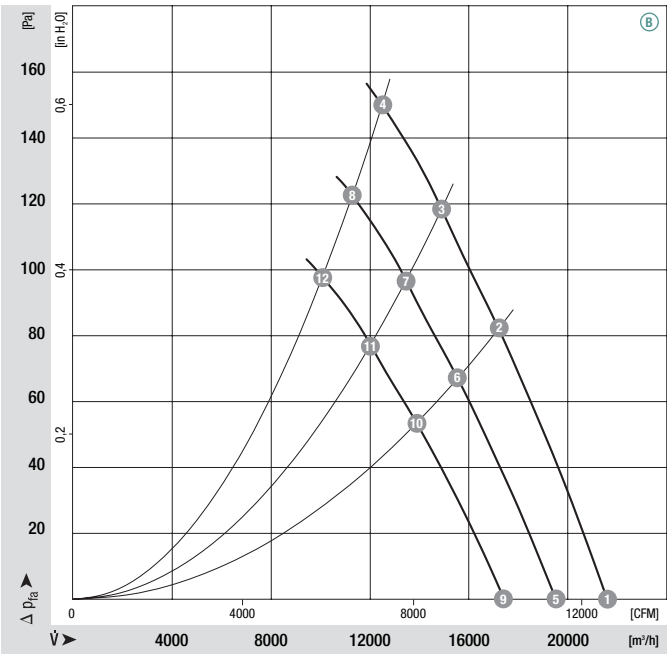

	n [rpm]	P_1 [kW]	I [A]	Lw_A [dB(A)]	η_{tL} [%]
(B) 1	830	0.88	1.40	72	—
(B) 2	830	1.13	1.70	70	75
(B) 3	830	1.24	1.90	72	67
(B) 4	830	1.35	2.20	77	57
(B) 5	750	0.65	1.00	69	—
(B) 6	750	0.83	1.30	68	75
(B) 7	750	0.91	1.40	70	67
(B) 8	750	0.99	1.50	75	57
(B) 9	670	0.46	0.70	67	—
(B) 10	670	0.60	0.90	66	75
(B) 11	670	0.65	1.00	68	67
(B) 12	670	0.71	1.10	72	57

Drawings p. 278 ff.

Electr. connection p. 428

EC axial fans mains-powered

S series, Ø 800

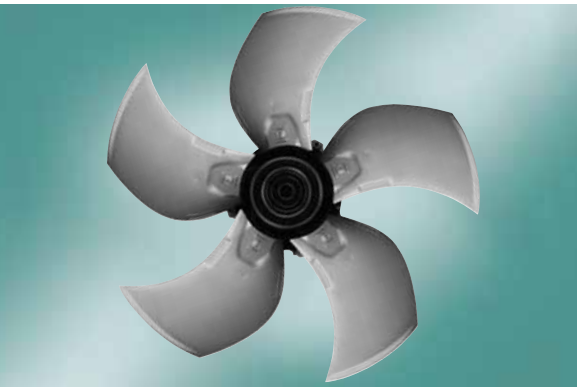

- **Material:** Guard grille: Steel, phosphated and coated in black plastic
  Wall ring: Sheet steel, pre-galvanised and coated in black plastic
  Blades: Die-cast aluminium
  Rotor: Cast-in with PA plastic
  Electronics enclosure: Die-cast aluminium, coated in black
- **Number of blades:** 5
- **Direction of rotation:** Dir. of air flow "V" clockwise, "A" counter-clockwise, seen on rotor
- **Type of protection:** IP 54 (acc. to EN 60529)
- **Insulation class:** "F"
- **Mounting position:** Shaft horizontal or rotor on bottom; rotor on top on request
- **Condensate discharges:** Rotor-side
- **Mode of operation:** Continuous operation (S1)
- **Bearings:** Maintenance-free ball bearings

Nominal data		Blade angle	Curve	Nominal voltage range	Frequency	Speed/rpm	Max. power input (1)	Max. current draw (1)	Max. operative range	Perm. amb. temp.	Electr. connection
Type	**Motor**			**VAC**	**Hz**	**rpm**	**kW**	**A**	**Pa**	**°C**	p. 428
***3G 800**	M3G 150-IF	0°	A	3~ 200-240	50/60	980	2.20	6.80	230	-25 to +60	M)
***3G 800**	M3G 150-IF	0°	B	3~ 380-480	50/60	980	2.20	3.40	230	-25 to +60	M)

subject to alterations

(1) Nominal data in operating point with maximum load and 200 or 400 VAC

Curves

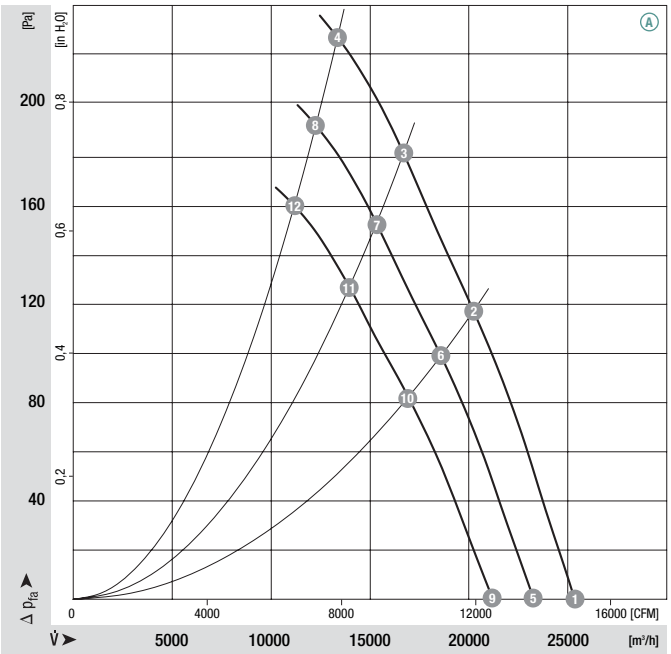

	n [rpm]	P_1 [kW]	I [A]	Lw_A [dB(A)]	η_{tL} [%]
A 1	980	1.37	4.20	74	—
A 2	980	1.76	5.40	73	78
A 3	980	1.93	5.80	76	67
A 4	980	2.20	6.80	82	52
A 5	900	1.06	3.20	73	—
A 6	900	1.36	4.20	72	78
A 7	900	1.50	4.30	73	67
A 8	900	1.71	5.20	80	52
A 9	820	0.80	2.40	71	—
A 10	820	1.03	3.20	70	78
A 11	820	1.13	3.40	73	67
A 12	820	1.30	4.00	78	52

ebmpapst

- **Technical features:**
  - PFC (passive)
  - Integrated PID controller
  - Control input 0-10 VDC / PWM
  - Input for sensor 0-10 V or 4-20 mA
  - Slave output 0-10 V max. 3 mA
  - Output 20 VDC (±20 %) max. 50 mA
  - Output 10 VDC (+10 %) max. 10 mA
  - RS485 ebmBUS
  - Alarm relay
  - Line undervoltage / phase failure detection
  - Motor current limitation
  - Over-temperature protected electronics / motor
  - Locked rotor protection
  - Soft start
- **EMC:** Interference emission acc. to EN 61000-6-3
  Interference immunity acc. to EN 61000-6-2
  Harmonics acc. to EN 61000-3-2/3
- **Leakage current:** < 3.5 mA acc. to EN 61800-5-1
- **Connection leads:** Via terminal strip
- **Protection class:** I (acc. to EN 61800-5-1)
- **Product conforming to standard:** CE
- **Approvals:** UL, CSA, GOST; (B) also VDE

Direction of air flow

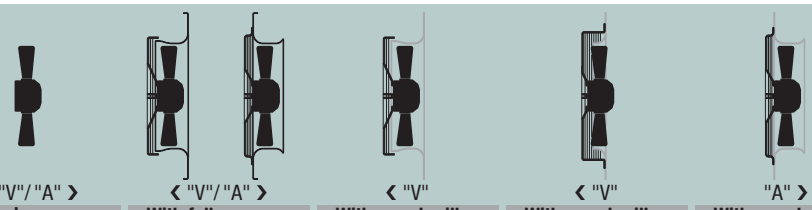

	❮ "V"/"A" ❯ Without attachments	❮ "V"/"A" ❯ With full square nozzle	❮ "V" With guard grille for full nozzle	❮ "V" With guard grille for short nozzle	"A" ❯ With guard grille for full nozzle
"V"	A3G 800-AH12 -13	W3G 800-CH12 -13	S3G 800-BH12 -13	S3G 800-AH12 -13	—
"A"	A3G 800-AH12 -14	W3G 800-CH12 -14	—	—	S3G 800-CH12 -14
"V"	A3G 800-AH03 -03	W3G 800-CH03 -03	S3G 800-BH03 -03	S3G 800-AH03 -03	—
"A"	A3G 800-AH03 -04	W3G 800-CH03 -04	—	—	S3G 800-CH03 -04

Curves

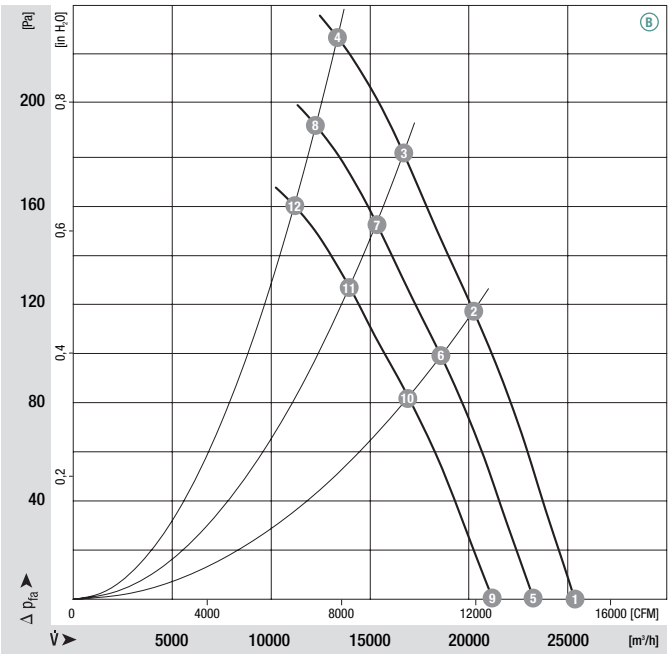

	n [rpm]	P_1 [kW]	I [A]	Lw_A [dB(A)]	η_{tL} [%]
(B) 1	980	1.37	2.10	74	—
(B) 2	980	1.76	2.70	73	78
(B) 3	980	1.93	2.90	76	67
(B) 4	980	2.20	3.40	82	52
(B) 5	900	1.06	1.60	73	—
(B) 6	900	1.36	2.10	72	78
(B) 7	900	1.50	2.30	73	67
(B) 8	900	1.71	2.60	80	52
(B) 9	820	0.80	1.20	71	—
(B) 10	820	1.03	1.60	70	78
(B) 11	820	1.13	1.70	73	67
(B) 12	820	1.30	2.00	78	52

Drawings p. 278 ff.

Electr. connection p. 428

EC axial fans mains-powered

S series, Ø 800, drawings for direction of air flow "V"

Without attachments

Type	Mass [kg]
A3G 800-AG10 -13	25.0
A3G 800-AG02 -03	25.0
A3G 800-AH12 -13	28.0
A3G 800-AH03 -03	28.0

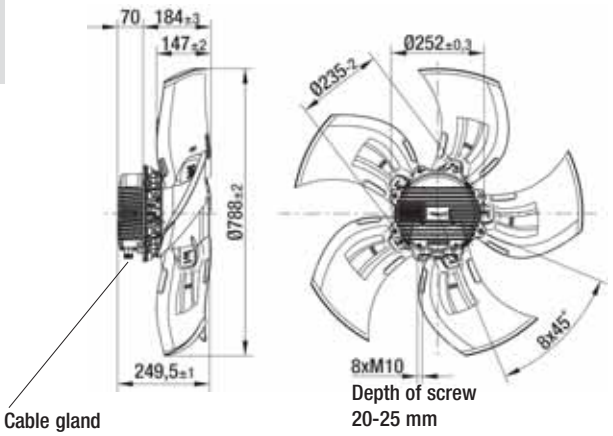

‹ "V"

With full square nozzle

Type	Mass [kg]
W3G 800-CG10 -13	46.5
W3G 800-CG02 -03	46.5
W3G 800-CH12 -13	49.5
W3G 800-CH03 -03	49.5

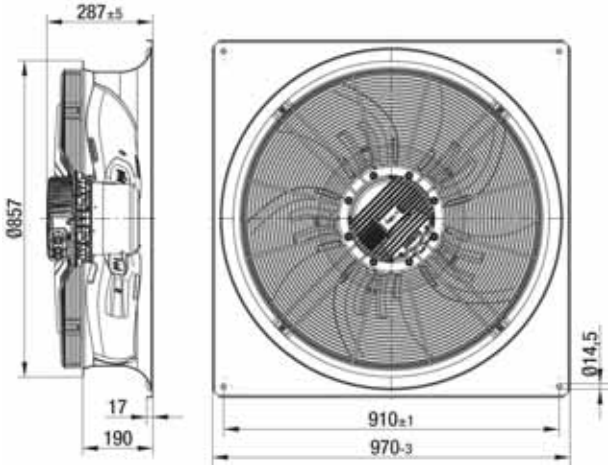

‹ "V"

With guard grille for full nozzle

Type	Mass [kg]
S3G 800-BG10 -13	31.5
S3G 800-BG02 -03	31.5
S3G 800-BH12 -13	34.5
S3G 800-BH03 -03	34.5

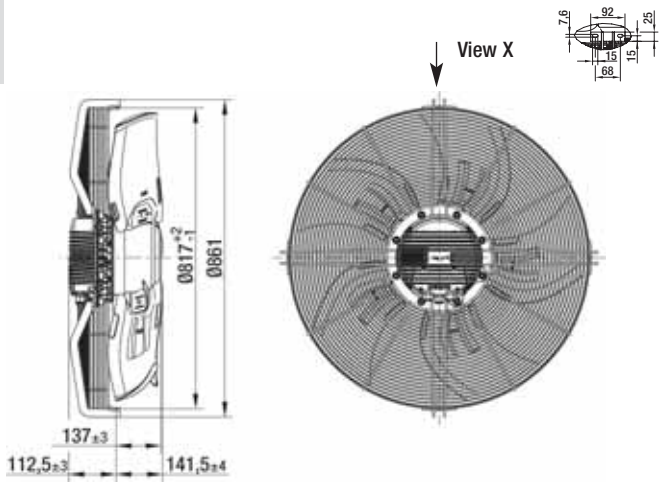

‹ "V"

ebmpapst

With guard grille for short nozzle

Type	Mass [kg]
S3G 800-AG10 -13	30.0
S3G 800-AG02 -03	30.0
S3G 800-AH12 -13	33.0
S3G 800-AH03 -03	33.0

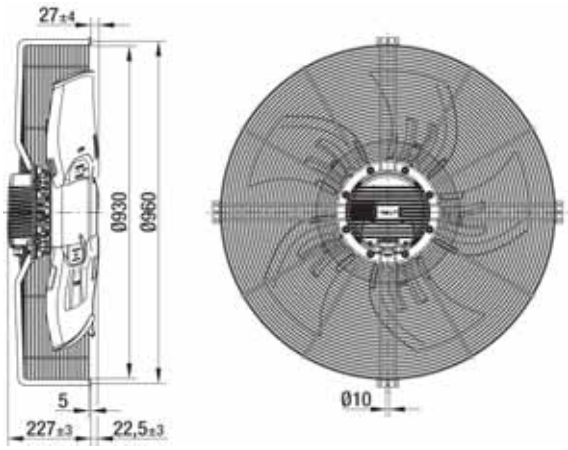

‹ "V"

EC axial fans mains-powered

S series, Ø 800, drawings for direction of air flow "A"

Without attachments

Type	Mass [kg]
A3G 800-AG10 -14	25.0
A3G 800-AG02 -04	25.0
A3G 800-AH12 -14	28.0
A3G 800-AH03 -04	28.0

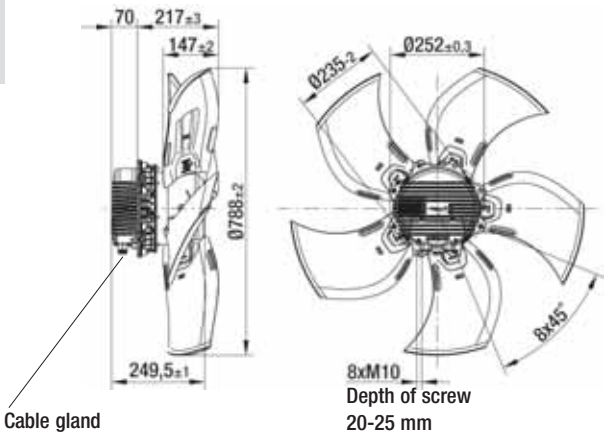

"A" ›

With full square nozzle

Type	Mass [kg]
W3G 800-CG10 -14	47.5
W3G 800-CG02 -04	47.5
W3G 800-CH12 -14	50.5
W3G 800-CH03 -04	50.5

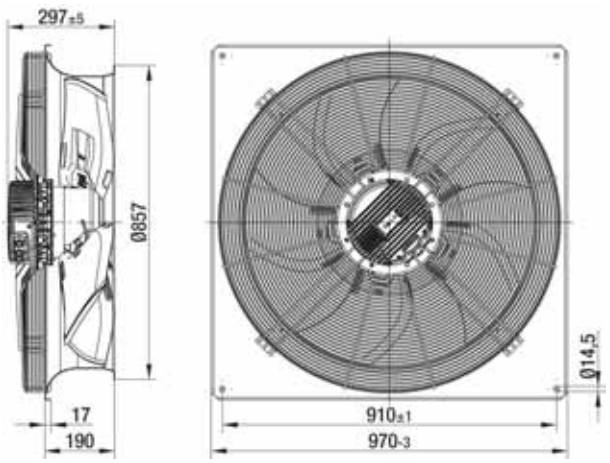

"A" ›

With guard grille for full nozzle

Type	Mass [kg]
S3G 800-CG10 -14	32.5
S3G 800-CG02 -04	32.5
S3G 800-CH12 -14	35.5
S3G 800-CH03 -04	35.5

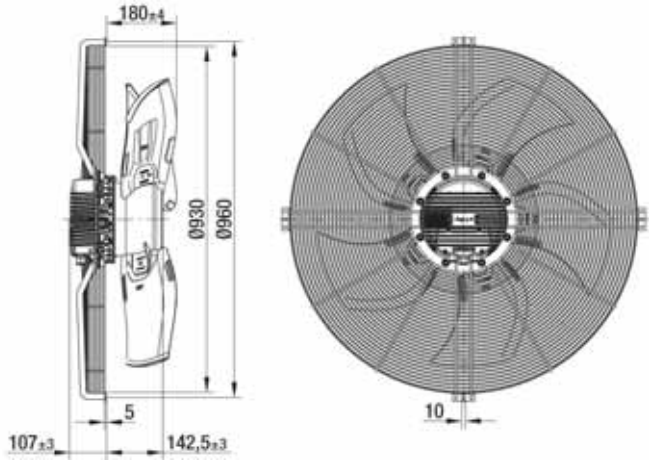

"A" ›

ebmpapst

EC axial fans mains-powered

S series, Ø 910

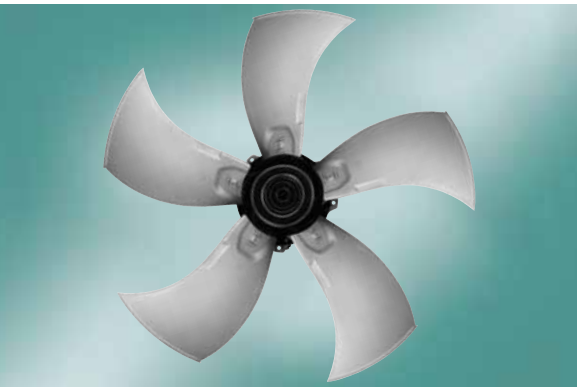

- **Material:** Guard grille: Steel, phosphated and coated in black plastic
  Wall ring: Sheet steel, pre-galvanised and coated in black plastic
  Blades: Die-cast aluminium
  Rotor: Cast-in with PA plastic
  Electronics enclosure: Die-cast aluminium, coated in black
- **Number of blades:** 5
- **Direction of rotation:** Dir. of air flow "V" clockwise, "A" counter-clockwise, seen on rotor
- **Type of protection:** IP 54 (acc. to EN 60529)
- **Insulation class:** "F"
- **Mounting position:** Shaft horizontal or rotor on bottom; rotor on top on request
- **Condensate discharges:** Rotor-side
- **Mode of operation:** Continuous operation (S1)
- **Bearings:** Maintenance-free ball bearings

Nominal data		Blade angle	Curve		Nominal voltage range	Frequency	Speed/rpm	Max. power input (1)	Max. current draw (1)	Max. operative range	Perm. amb. temp.	Electr. connection
Type	**Motor**				**VAC**	**Hz**	**rpm**	**kW**	**A**	**Pa**	**°C**	p. 428
***3G 910**	M3G 150-FF	0°	A	3~	200-240	50/60	720	1.15	3.60	100	-25 to +60	M)
***3G 910**	M3G 150-FF	0°	B	3~	380-480	50/60	720	1.15	1.80	100	-25 to +60	M)

subject to alterations

(1) Nominal data in operating point with maximum load and 200 or 400 VAC

Curves

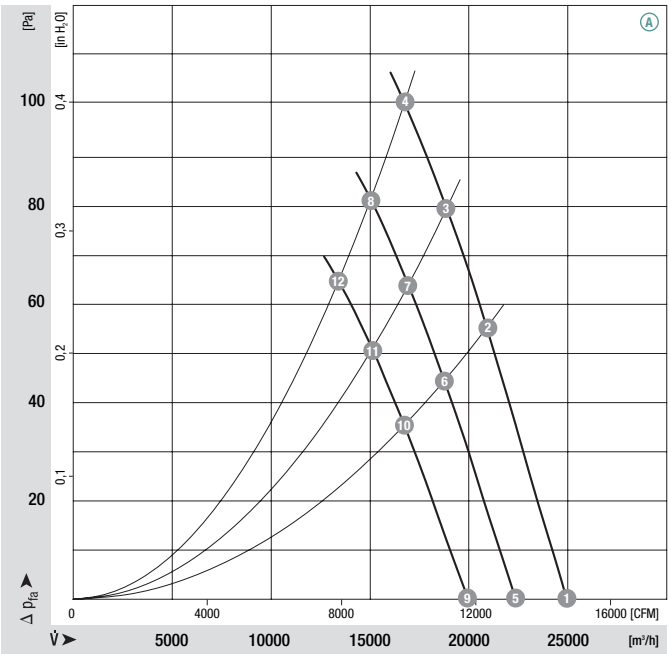

	n [rpm]	P_1 [kW]	I [A]	Lw_A [dB(A)]	η_{tL} [%]
A 1	720	0.77	2.40	72	—
A 2	720	0.99	3.00	71	75
A 3	720	1.08	3.40	71	70
A 4	720	1.15	3.60	72	64
A 5	650	0.56	1.80	70	—
A 6	650	0.72	2.20	68	75
A 7	650	0.78	2.40	68	70
A 8	650	0.84	2.60	70	64
A 9	580	0.40	1.20	67	—
A 10	580	0.51	1.60	66	75
A 11	580	0.55	1.80	66	70
A 12	580	0.60	1.80	68	64

ebmpapst

- **Technical features:**
  - PFC (passive)
  - Integrated PID controller
  - Control input 0-10 VDC / PWM
  - Input for sensor 0-10 V or 4-20 mA
  - Slave output 0-10 V max. 3 mA
  - Output 20 VDC (±20 %) max. 50 mA
  - Output 10 VDC (+10 %) max. 10 mA
  - RS485 ebmBUS
  - Alarm relay
  - Line undervoltage / phase failure detection
  - Motor current limitation
  - Over-temperature protected electronics / motor
  - Locked rotor protection
  - Soft start
- **EMC:** Interference emission acc. to EN 61000-6-3
  Interference immunity acc. to EN 61000-6-2
  Harmonics acc. to EN 61000-3-2/3
- **Leakage current:** < 3.5 mA acc. to EN 61800-5-1
- **Connection leads:** Via terminal strip
- **Protection class:** I (acc. to EN 61800-5-1)
- **Product conforming to standard:** CE
- **Approvals:** UL, CSA, GOST; (B) also VDE

Direction of air flow

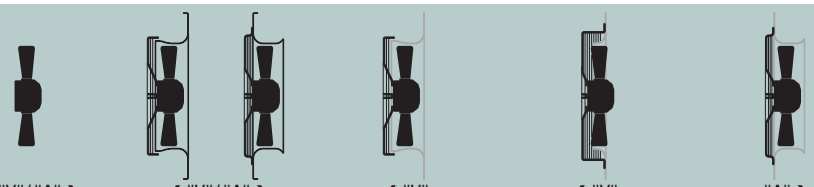

	❮ "V"/"A" ❯ Without attachments	❮ "V"/"A" ❯ With full square nozzle	❮ "V" With guard grille for full nozzle	❮ "V" With guard grille for short nozzle	"A" ❯ With guard grille for full nozzle
"V"	A3G 910-AG10 -13	W3G 910-CG10 -13	S3G 910-BG10 -13	S3G 910-AG10 -13	—
"A"	A3G 910-AG10 -14	W3G 910-CG10 -14	—	—	S3G 910-CG10 -14
"V"	A3G 910-AG02 -03	W3G 910-CG02 -03	S3G 910-BG02 -03	S3G 910-AG02 -03	—
"A"	A3G 910-AG02 -04	W3G 910-CG02 -04	—	—	S3G 910-CG02 -04

Curves

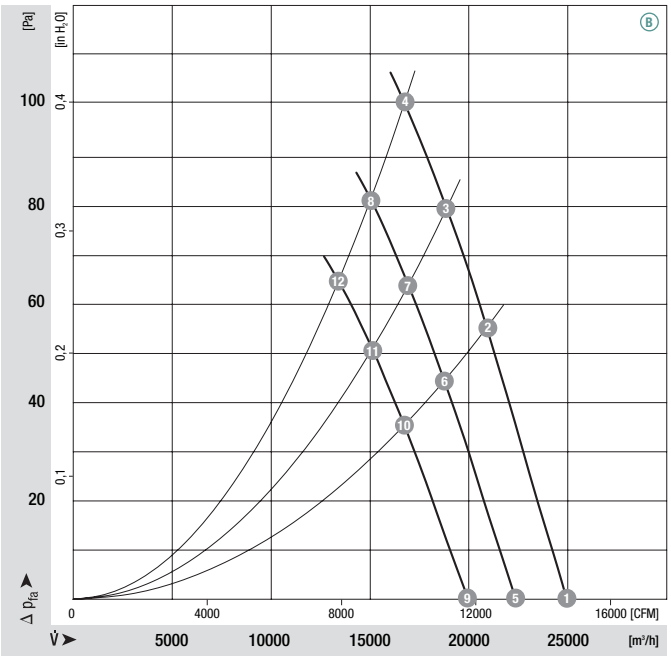

	n [rpm]	P_1 [kW]	I [A]	Lw_A [dB(A)]	η_{tL} [%]
(B) 1	720	0.77	1.20	72	—
(B) 2	720	0.99	1.50	71	75
(B) 3	720	1.08	1.70	71	70
(B) 4	720	1.15	1.80	72	64
(B) 5	650	0.56	0.90	70	—
(B) 6	650	0.72	1.10	68	75
(B) 7	650	0.78	1.20	68	70
(B) 8	650	0.84	1.30	70	64
(B) 9	580	0.40	0.60	67	—
(B) 10	580	0.51	0.80	66	75
(B) 11	580	0.55	0.90	66	70
(B) 12	580	0.60	0.90	68	64

Drawings p. 288 ff.

Electr. connection p. 428

EC axial fans mains-powered

S series, Ø 910

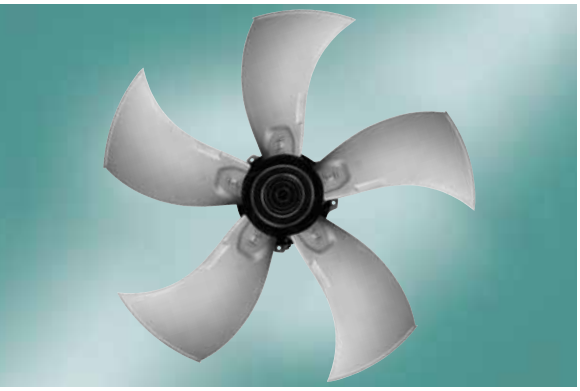

- **Material:** Guard grille: Steel, phosphated and coated in black plastic
  Wall ring: Sheet steel, pre-galvanised and coated in black plastic
  Blades: Die-cast aluminium
  Rotor: Cast-in with PA plastic
  Electronics enclosure: Die-cast aluminium, coated in black
- **Number of blades:** 5
- **Direction of rotation:** Dir. of air flow "V" clockwise, "A" counter-clockwise, seen on rotor
- **Type of protection:** IP 54 (acc. to EN 60529)
- **Insulation class:** "F"
- **Mounting position:** Shaft horizontal or rotor on bottom; rotor on top on request
- **Condensate discharges:** Rotor-side
- **Mode of operation:** Continuous operation (S1)
- **Bearings:** Maintenance-free ball bearings

Nominal data		Blade angle	Curve	Nominal voltage range	Frequency	Speed/rpm	Max. power input (1)	Max. current draw (1)	Max. operative range	Perm. amb. temp.	Electr. connection
Type	**Motor**			**VAC**	**Hz**	**rpm**	**kW**	**A**	**Pa**	**°C**	p. 428
***3G 910**	M3G 150-IF	0°	A	3~ 200-240	50/60	870	1.90	5.80	140	-25 to +60	M)
***3G 910**	M3G 150-IF	0°	B	3~ 380-480	50/60	870	1.90	2.90	140	-25 to +60	M)

subject to alterations

(1) Nominal data in operating point with maximum load and 200 or 400 VAC

Curves

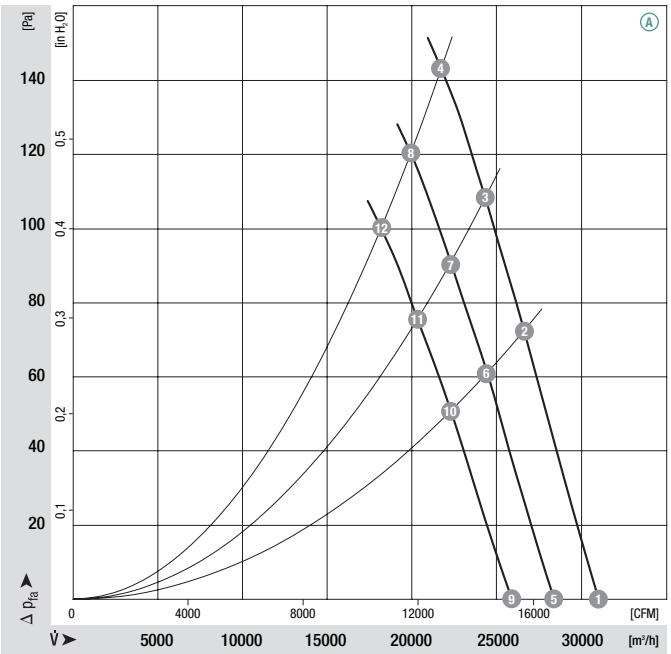

	n [rpm]	P_1 [kW]	I [A]	Lw_A [dB(A)]	η_{tL} [%]
A 1	870	1.30	4.00	76	—
A 2	870	1.62	5.00	75	74
A 3	870	1.76	5.40	75	71
A 4	870	1.90	5.80	77	66
A 5	800	1.01	3.20	74	—
A 6	800	1.26	3.80	73	74
A 7	800	1.35	4.20	73	71
A 8	800	1.46	4.40	75	66
A 9	730	0.77	2.40	72	—
A 10	730	0.76	3.00	71	74
A 11	730	1.03	3.20	71	71
A 12	730	1.11	3.40	73	66

ebmpapst

- **Technical features:**
  - PFC (passive)
  - Integrated PID controller
  - Control input 0-10 VDC / PWM
  - Input for sensor 0-10 V or 4-20 mA
  - Slave output 0-10 V max. 3 mA
  - Output 20 VDC (±20 %) max. 50 mA
  - Output 10 VDC (+10 %) max. 10 mA
  - RS485 ebmBUS
  - Alarm relay
  - Line undervoltage / phase failure detection
  - Motor current limitation
  - Over-temperature protected electronics / motor
  - Locked rotor protection
  - Soft start
- **EMC:** Interference emission acc. to EN 61000-6-3
  Interference immunity acc. to EN 61000-6-2
  Harmonics acc. to EN 61000-3-2/3
- **Leakage current:** < 3.5 mA acc. to EN 61800-5-1
- **Connection leads:** Via terminal strip
- **Protection class:** I (acc. to EN 61800-5-1)
- **Product conforming to standard:** CE
- **Approvals:** UL, CSA, GOST; (B) also VDE

Direction of air flow

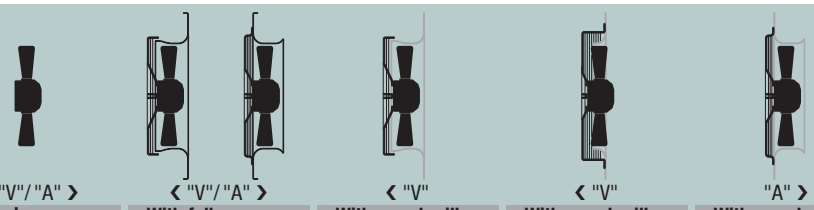

	Without attachments	With full square nozzle	With guard grille for full nozzle	With guard grille for short nozzle	With guard grille for full nozzle
"V"	A3G 910-AH09 -13	W3G 910-CH09 -13	S3G 910-BH09 -13	S3G 910-AH09 -13	—
"A"	A3G 910-AH09 -14	W3G 910-CH09 -14	—	—	S3G 910-CH09 -14
"V"	A3G 910-AH04 -03	W3G 910-CH04 -03	S3G 910-BH04 -03	S3G 910-AH04 -03	—
"A"	A3G 910-AH04 -04	W3G 910-CH04 -04	—	—	S3G 910-CH04 -04

Curves

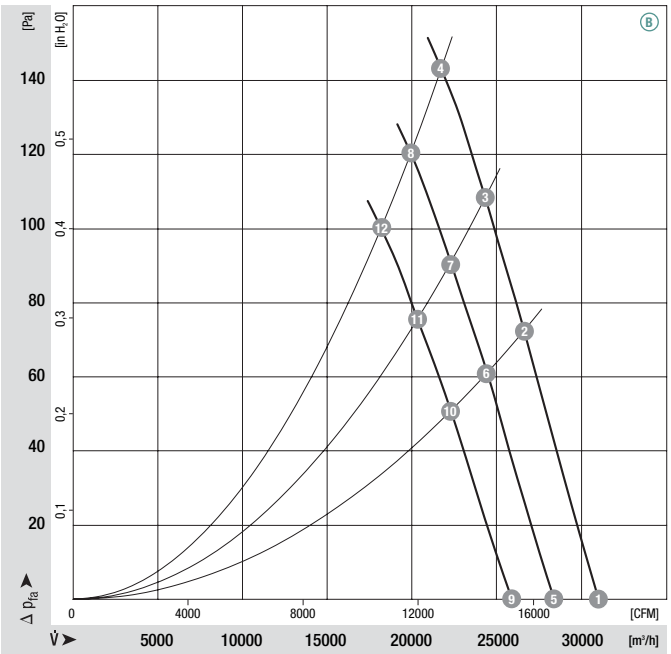

	n [rpm]	P_1 [kW]	I [A]	Lw_A [dB(A)]	η_{tL} [%]
(B) 1	870	1.30	2.00	76	—
(B) 2	870	1.62	2.50	75	74
(B) 3	870	1.76	2.70	75	71
(B) 4	870	1.90	2.90	77	66
(B) 5	800	1.01	1.60	74	—
(B) 6	800	1.26	1.90	73	74
(B) 7	800	1.35	2.10	73	71
(B) 8	800	1.46	2.20	75	66
(B) 9	730	0.77	1.20	72	—
(B) 10	730	0.76	1.50	71	74
(B) 11	730	1.03	1.60	71	71
(B) 12	730	1.11	1.70	73	66

Drawings p. 288 ff.

Electr. connection p. 428

EC axial fans mains-powered

S series, Ø 910

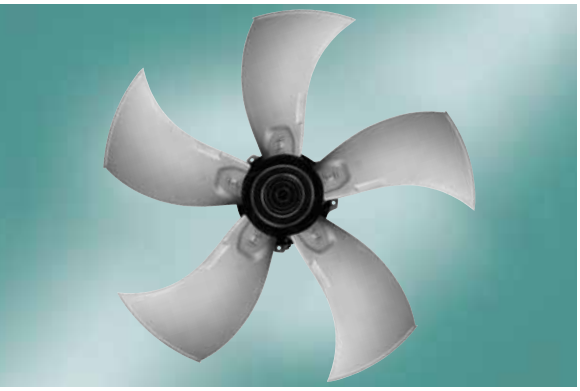

- **Material:** Guard grille: Steel, phosphated and coated in black plastic
  Wall ring: Sheet steel, pre-galvanised and coated in black plastic
  Blades: Die-cast aluminium
  Rotor: Cast-in with PA plastic
  Electronics enclosure: Die-cast aluminium, coated in black
- **Number of blades:** 5
- **Direction of rotation:** Dir. of air flow "V" clockwise, "A" counter-clockwise, seen on rotor
- **Type of protection:** IP 54 (acc. to EN 60529)
- **Insulation class:** "F"
- **Mounting position:** Shaft horizontal or rotor on bottom; rotor on top on request
- **Condensate discharges:** Rotor-side
- **Mode of operation:** Continuous operation (S1)
- **Bearings:** Maintenance-free ball bearings

Nominal data		Blade angle	Curve		Nominal voltage range	Frequency	Speed/rpm	Max. power input (1)	Max. current draw (1)	Max. operative range	Perm. amb. temp.	Electr. connection
Type	**Motor**				**VAC**	**Hz**	**rpm**	**kW**	**A**	**Pa**	**°C**	p. 428
***3G 910**	M3G 150-NA	0°	A	3~	380-480	50/60	980	2.80	4.30	220	-25 to +60	M)

subject to alterations

(1) Nominal data in operating point with maximum load and 400 VAC

Curves

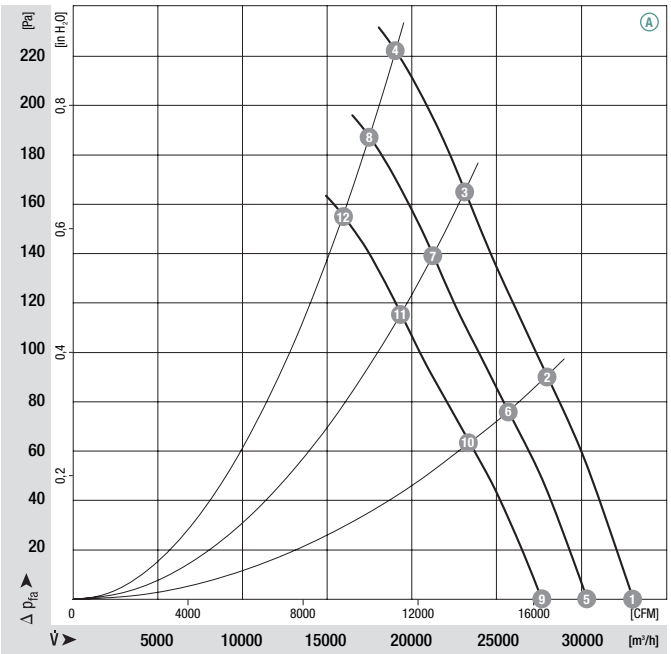

	n [rpm]	P_1 [kW]	I [A]	Lw_A [dB(A)]	η_{tL} [%]
A 1	980	1.82	2.80	80	—
A 2	980	2.24	3.40	80	73
A 3	980	2.55	3.90	83	65
A 4	980	2.80	4.30	86	56
A 5	900	1.41	2.20	78	—
A 6	900	1.76	2.60	78	73
A 7	900	1.97	3.00	82	65
A 8	900	2.15	3.30	84	56
A 9	820	1.07	1.60	76	—
A 10	820	1.31	2.00	76	73
A 11	820	1.49	2.30	80	65
A 12	820	1.63	2.50	82	56

ebmpapst

- **Technical features:**
  - PFC (passive)
  - Integrated PID controller
  - Control input 0-10 VDC / PWM
  - Input for sensor 0-10 V or 4-20 mA
  - Slave output 0-10 V max. 3 mA
  - Output 20 VDC (±20 %) max. 50 mA
  - Output 10 VDC (+10 %) max. 10 mA
  - RS485 ebmBUS
  - Alarm relay
  - Line undervoltage / phase failure detection
  - Motor current limitation
  - Over-temperature protected electronics / motor
  - Locked rotor protection
  - Soft start
- **EMC:** Interference emission acc. to EN 61000-6-3
  Interference immunity acc. to EN 61000-6-2
  Harmonics acc. to EN 61000-3-2/3
- **Leakage current:** < 3.5 mA acc. to EN 61800-5-1
- **Connection leads:** Via terminal strip
- **Protection class:** I (acc. to EN 61800-5-1)
- **Product conforming to standard:** CE
- **Approvals:** VDE, UL, CSA, GOST

Direction of air flow

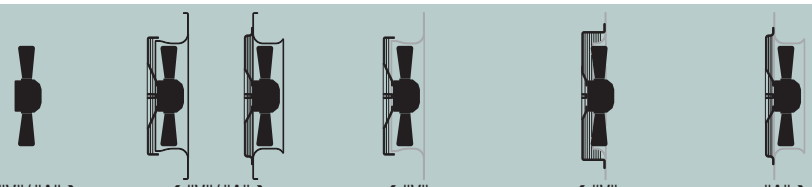

	❮ "V"/"A" ❯ Without attachments	❮ "V"/"A" ❯ With full square nozzle	❮ "V" With guard grille for full nozzle	❮ "V" With guard grille for short nozzle	"A" ❯ With guard grille for full nozzle
"V"	A3G 910-AI02 -03	W3G 910-CI02 -03	S3G 910-BI02 -03	S3G 910-AI02 -03	—
"A"	A3G 910-AI02 -04	W3G 910-CI02 -04	—	—	S3G 910-CI02 -04

EC axial fans mains-powered

S series, Ø 910, drawings for direction of air flow "V"

Without attachments

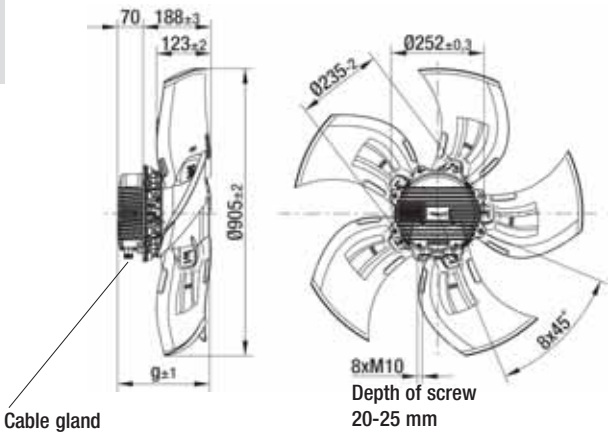

‹ "V"

Type	Mass [kg]	g
A3G 910-AG10 -13	25.5	249.5
A3G 910-AG02 -03	25.5	249.5
A3G 910-AH09 -13	28.5	249.5
A3G 910-AH04 -03	28.5	249.5
A3G 910-AI02 -03	33.0	284.5

With full square nozzle

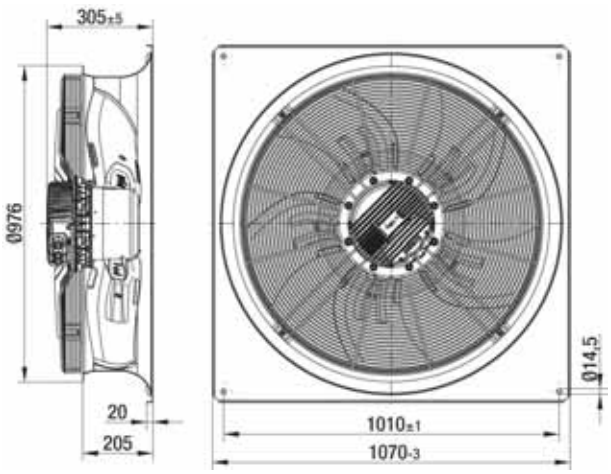

‹ "V"

Type	Mass [kg]
W3G 910-CG10 -13	51.0
W3G 910-CG02 -03	51.0
W3G 910-CH09 -13	54.0
W3G 910-CH04 -03	54.0
W3G 910-CI02 -03	58.5

With guard grille for full nozzle

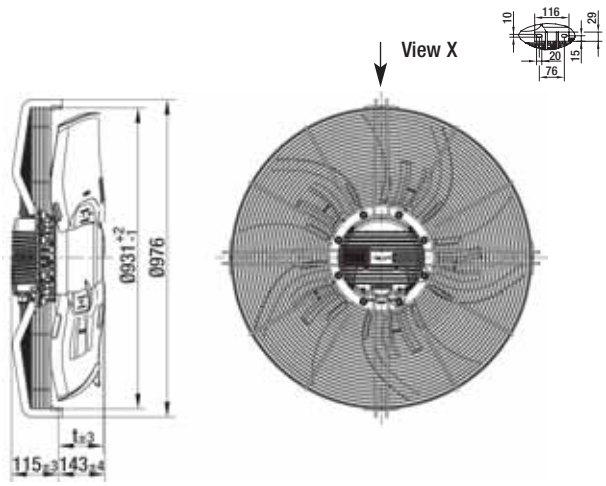

‹ "V"

Type	Mass [kg]	t
S3G 910-BG10 -13	34.0	134.5
S3G 910-BG02 -03	34.0	134.5
S3G 910-BH09 -13	37.0	134.5
S3G 910-BH04 -03	37.0	134.5
S3G 910-BI02 -03	41.5	169.5

With guard grille for short nozzle

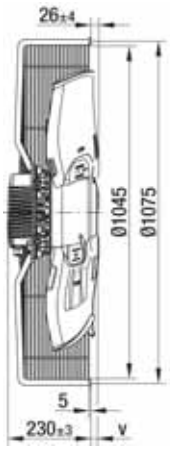

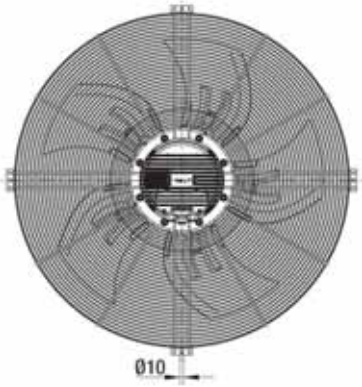

‹ "V"

Type	Mass [kg]	v
S3G 910-AG10 -13	36.0	19.5
S3G 910-AG02 -03	36.0	19.5
S3G 910-AH09 -13	39.0	19.5
S3G 910-AH04 -03	39.0	19.5
S3G 910-AI02 -03	43.5	54.5

EC axial fans mains-powered

S series, Ø 910, drawings for direction of air flow "A"

Without attachments

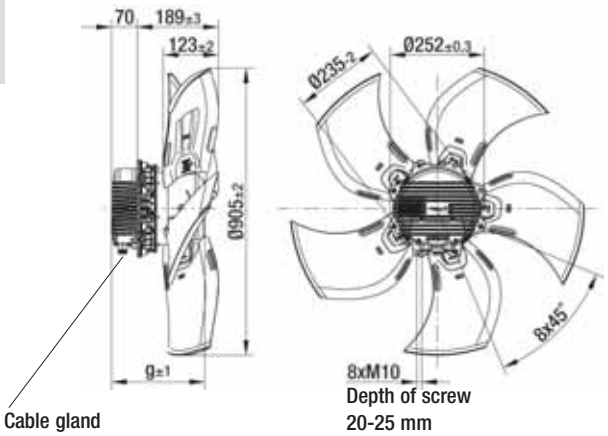

"A" ›

Type	Mass [kg]	g
A3G 910-AG10 -14	25.5	249.5
A3G 910-AG02 -04	25.5	249.5
A3G 910-AH09 -14	28.5	249.5
A3G 910-AH04 -04	28.5	249.5
A3G 910-AI02 -04	33.0	284.5

With full square nozzle

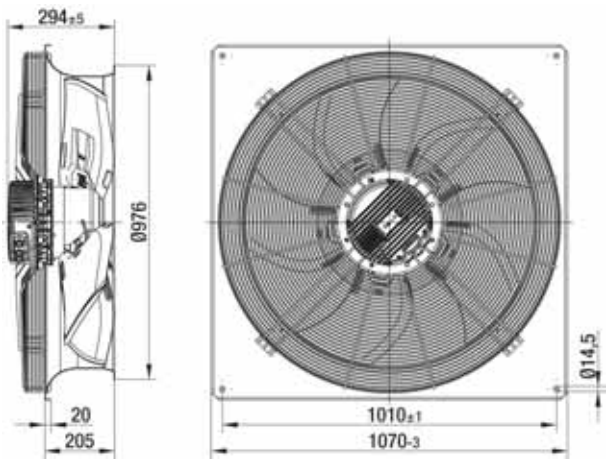

"A" ›

Type	Mass [kg]
W3G 910-CG10 -14	52.0
W3G 910-CG02 -04	52.0
W3G 910-CH09 -14	55.0
W3G 910-CH04 -04	55.0
W3G 910-CI02 -04	59.5

With guard grille for full nozzle

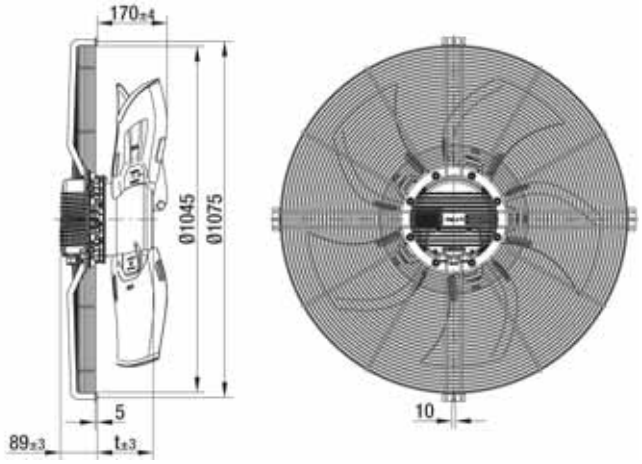

"A" ›

Type	Mass [kg]	t
S3G 910-CG10 -14	35.0	160.5
S3G 910-CG02 -04	35.0	160.5
S3G 910-CH09 -14	38.0	160.5
S3G 910-CH04 -04	38.0	160.5
S3G 910-CI02 -04	42.5	195.5

ebmpapst

EC axial fans mains-powered

S series, Ø 990

- **Material:** Guard grille: Steel, phosphated and coated in black plastic
  Wall ring: Sheet steel, pre-galvanised and coated in black plastic
  Blades: Die-cast aluminium
  Rotor: Cast-in with PA plastic
  Electronics enclosure: Die-cast aluminium, coated in black
- **Number of blades:** 7
- **Direction of rotation:** Dir. of air flow "V" clockwise, "A" counter-clockwise, seen on rotor
- **Type of protection:** IP 54 (acc. to EN 60529)
- **Insulation class:** "F"
- **Mounting position:** Shaft horizontal or rotor on bottom; rotor on top on request
- **Condensate discharges:** Rotor-side
- **Mode of operation:** Continuous operation (S1)
- **Bearings:** Maintenance-free ball bearings

Nominal data

Type	Motor		Curve	Nominal voltage range	Frequency	Speed/rpm	Max. power input (1)	Max. current draw (1)	Max. operative range	Perm. amb. temp.	Electr. connection
				VAC	Hz	rpm	kW	A	Pa	°C	p. 428
*3G 990	M3G 150-FF		A	3~ 200-240	50/60	545	0.90	3.80	90	-25 to +60	M)
*3G 990	M3G 150-FF		B	3~ 380-480	50/60	545	0.90	1.90	90	-25 to +60	M)

subject to alterations

(1) Nominal data in operating point with maximum load and 200 or 400 VAC

Curves

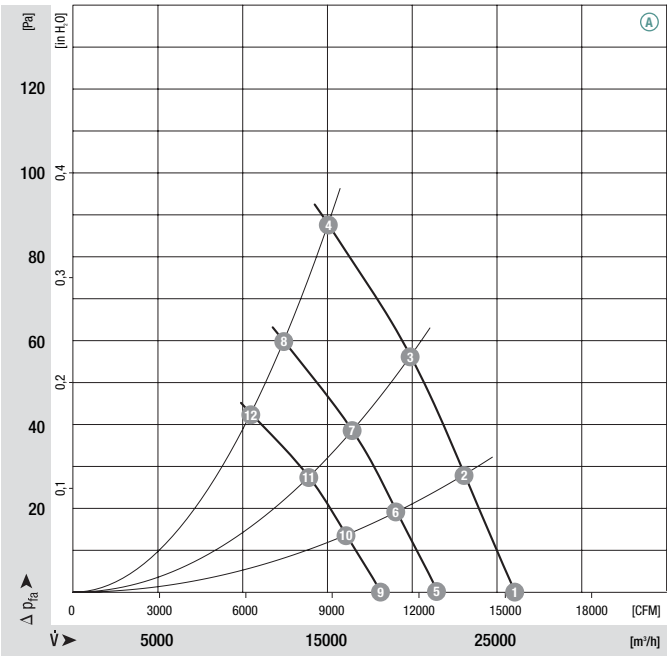

	n [rpm]	P_1 [kW]	I [A]	Lp_A [dB(A)]	η_{tL} [%]
A 1	545	0.63	2.40	70	—
A 2	545	0.74	2.60	71	72
A 3	545	0.81	2.80	71	70
A 4	545	0.88	3.00	70	57
A 5	450	0.36	1.40	65	—
A 6	450	0.42	1.60	66	72
A 7	450	0.46	1.80	66	70
A 8	450	0.50	1.80	65	57
A 9	380	0.22	0.80	61	—
A 10	380	0.26	1.00	61	72
A 11	380	0.28	1.20	61	70
A 12	380	0.31	1.20	61	57

ebmpapst

- **Technical features:**
  - PFC (passive)
  - Integrated PID controller
  - Control input 0-10 VDC / PWM
  - Input for sensor 0-10 V or 4-20 mA
  - Slave output 0-10 V max. 3 mA
  - Output 20 VDC (±20 %) max. 50 mA
  - Output 10 VDC (+10 %) max. 10 mA
  - RS485 ebmBUS
  - Alarm relay
  - Line undervoltage / phase failure detection
  - Motor current limitation
  - Over-temperature protected electronics / motor
  - Locked rotor protection
  - Soft start
- **EMC:** Interference emission acc. to EN 61000-6-3
  Interference immunity acc. to EN 61000-6-2
  Harmonics acc. to EN 61000-3-2/3
- **Leakage current:** < 3.5 mA acc. to EN 61800-5-1
- **Connection leads:** Via terminal strip
- **Protection class:** I (acc. to EN 61800-5-1)
- **Product conforming to standard:** CE
- **Approvals:** UL, CSA, CCC, GOST; Ⓑ also VDE

Direction of air flow

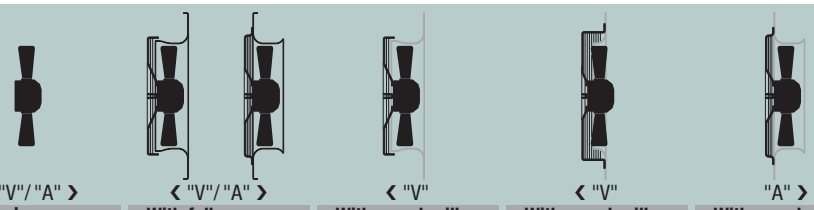

	Without attachments	With full square nozzle	With guard grille for full nozzle	With guard grille for short nozzle	With guard grille for full nozzle
"V"	A3G 990-AC04 -13	W3G 990-CC04 -13	S3G 990-BC04 -13	—	—
"A"	A3G 990-AC04 -14	W3G 990-CC04 -14	—	—	S3G 990-CC04 -14
"V"	A3G 990-AC03 -03	W3G 990-CC03 -03	S3G 990-BC03 -03	—	—
"A"	A3G 990-AC03 -04	W3G 990-CC03 -04	—	—	S3G 990-CC03 -04

Curves

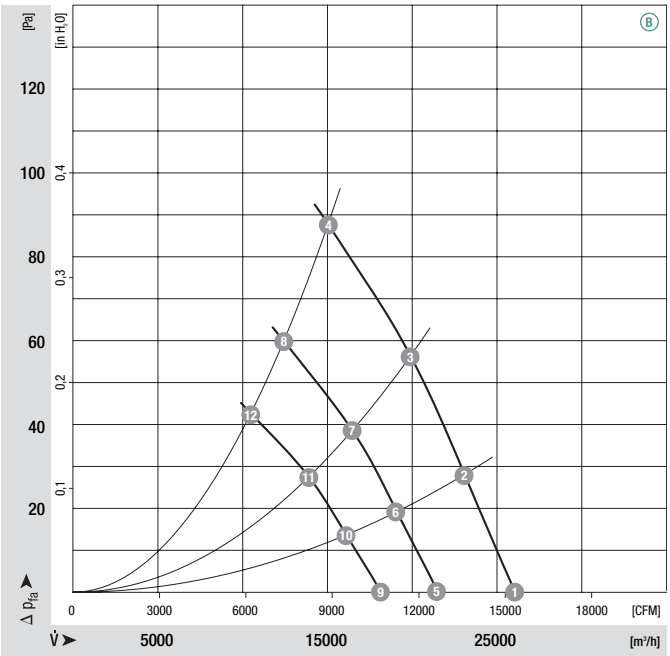

	n [rpm]	P_1 [kW]	I [A]	Lp_A [dB(A)]	η_{tL} [%]
Ⓑ 1	545	0.63	1.20	70	—
Ⓑ 2	545	0.74	1.30	71	72
Ⓑ 3	545	0.81	1.40	71	70
Ⓑ 4	545	0.88	1.50	70	57
Ⓑ 5	450	0.36	0.70	65	—
Ⓑ 6	450	0.42	0.80	66	72
Ⓑ 7	450	0.46	0.90	66	70
Ⓑ 8	450	0.50	0.90	65	57
Ⓑ 9	380	0.22	0.40	61	—
Ⓑ 10	380	0.26	0.50	61	72
Ⓑ 11	380	0.28	0.60	61	70
Ⓑ 12	380	0.31	0.60	61	57

Drawings p. 298 f.

Electr. connection p. 428

EC axial fans mains-powered

S series, Ø 990

- **Material:** Guard grille: Steel, phosphated and coated in black plastic
  Wall ring: Sheet steel, pre-galvanised and coated in black plastic
  Blades: Die-cast aluminium
  Rotor: Cast-in with PA plastic
  Electronics enclosure: Die-cast aluminium, coated in black
- **Number of blades:** 7
- **Direction of rotation:** Dir. of air flow "V" clockwise, "A" counter-clockwise, seen on rotor
- **Type of protection:** IP 54 (acc. to EN 60529)
- **Insulation class:** "F"
- **Mounting position:** Shaft horizontal or rotor on bottom; rotor on top on request
- **Condensate discharges:** Rotor-side
- **Mode of operation:** Continuous operation (S1)
- **Bearings:** Maintenance-free ball bearings

Nominal data

Type	Motor		Curve	Nominal voltage range	Frequency	Speed/rpm	Max. power input (1)	Max. current draw (1)	Max. operative range	Perm. amb. temp.	Electr. connection
				VAC	Hz	rpm	kW	A	Pa	°C	p. 428
*3G 990	M3G 150-IF		A	3~ 200-240	50/60	650	1.50	4.80	120	-25 to +60	M)
*3G 990	M3G 150-IF		B	3~ 380-480	50/60	650	1.50	2.60	120	-25 to +60	M)

subject to alterations

(1) Nominal data in operating point with maximum load and 200 or 400 VAC

Curves

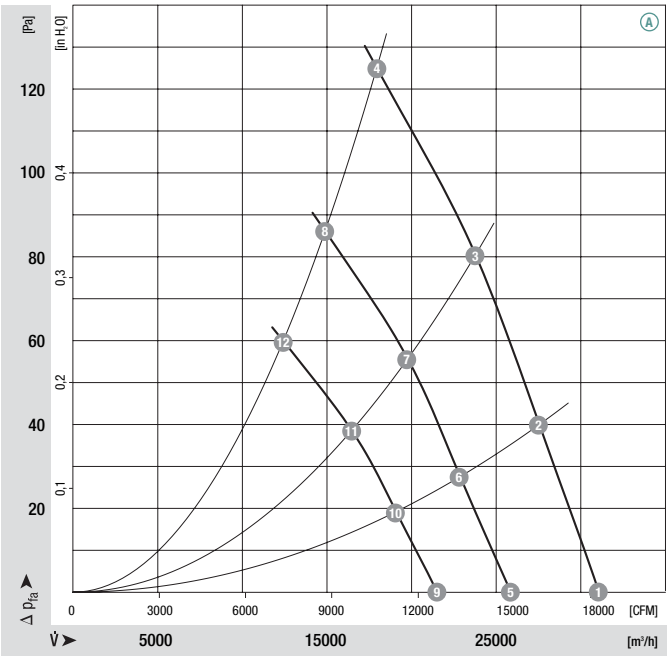

	n [rpm]	P_1 [kW]	I [A]	Lp_A [dB(A)]	η_{tL} [%]
A 1	650	1.02	3.60	75	—
A 2	650	1.21	4.00	76	72
A 3	650	1.32	4.40	76	70
A 4	650	1.44	4.60	75	57
A 5	540	0.60	2.20	70	—
A 6	540	0.71	2.60	71	72
A 7	540	0.78	2.80	71	70
A 8	540	0.84	3.00	70	57
A 9	450	0.36	1.40	65	—
A 10	450	0.42	1.60	66	72
A 11	450	0.46	1.80	66	70
A 12	450	0.50	1.80	65	57

ebmpapst

- **Technical features:**
  - PFC (passive)
  - Integrated PID controller
  - Control input 0-10 VDC / PWM
  - Input for sensor 0-10 V or 4-20 mA
  - Slave output 0-10 V max. 3 mA
  - Output 20 VDC (±20 %) max. 50 mA
  - Output 10 VDC (+10 %) max. 10 mA
  - RS485 ebmBUS
  - Alarm relay
  - Line undervoltage / phase failure detection
  - Motor current limitation
  - Over-temperature protected electronics / motor
  - Locked rotor protection
  - Soft start
- **EMC:** Interference emission acc. to EN 61000-6-3
  Interference immunity acc. to EN 61000-6-2
  Harmonics acc. to EN 61000-3-2/3
- **Leakage current:** < 3.5 mA acc. to EN 61800-5-1
- **Connection leads:** Via terminal strip
- **Protection class:** I (acc. to EN 61800-5-1)
- **Product conforming to standard:** CE
- **Approvals:** UL, CSA, GOST; (B) also VDE

Direction of air flow

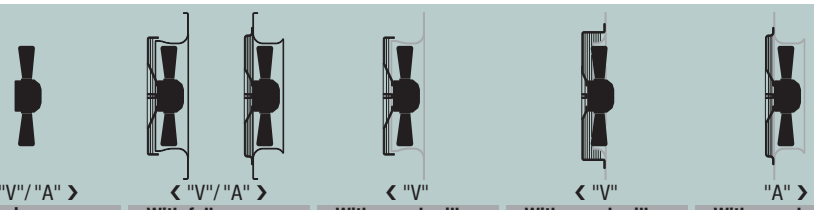

	Without attachments	With full square nozzle	With guard grille for full nozzle	With guard grille for short nozzle	With guard grille for full nozzle
"V"	A3G 990-AD11 -13	W3G 990-CD11 -13	S3G 990-BD11 -13	—	—
"A"	A3G 990-AD11 -14	W3G 990-CD11 -14	—	—	S3G 990-CD11 -14
"V"	A3G 990-AD05 -03	W3G 990-CD05 -03	S3G 990-BD05 -03	—	—
"A"	A3G 990-AD05 -04	W3G 990-CD05 -04	—	—	S3G 990-CD05 -04

Curves

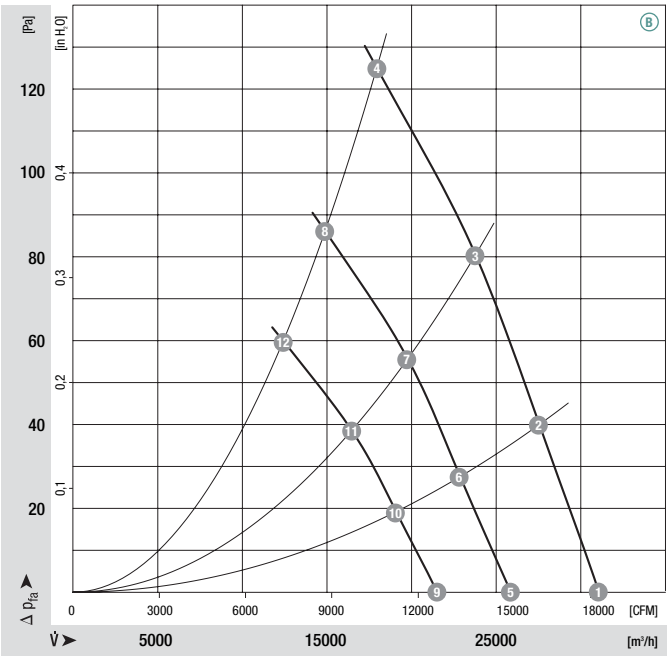

	n [rpm]	P_1 [kW]	I [A]	Lp_A [dB(A)]	η_{tL} [%]
(B) 1	650	1.02	1.80	75	—
(B) 2	650	1.21	2.00	76	72
(B) 3	650	1.32	2.20	76	70
(B) 4	650	1.44	2.30	75	57
(B) 5	540	0.60	1.10	70	—
(B) 6	540	0.71	1.30	71	72
(B) 7	540	0.78	1.40	71	70
(B) 8	540	0.84	1.50	70	57
(B) 9	450	0.36	0.70	65	—
(B) 10	450	0.42	0.80	66	72
(B) 11	450	0.46	0.90	66	70
(B) 12	450	0.50	0.90	65	57

Drawings p. 298 f.

Electr. connection p. 428

EC axial fans mains-powered

S series, Ø 990

- **Material:** Guard grille: Steel, phosphated and coated in black plastic
  Wall ring: Sheet steel, pre-galvanised and coated in black plastic
  Blades: Die-cast aluminium
  Rotor: Cast-in with PA plastic
  Electronics enclosure: Die-cast aluminium, coated in black
- **Number of blades:** 7
- **Direction of rotation:** Dir. of air flow "V" clockwise, "A" counter-clockwise, seen on rotor
- **Type of protection:** IP 54 (acc. to EN 60529)
- **Insulation class:** "F"
- **Mounting position:** Shaft horizontal or rotor on bottom; rotor on top on request
- **Condensate discharges:** Rotor-side
- **Mode of operation:** Continuous operation (S1)
- **Bearings:** Maintenance-free ball bearings

Nominal data

Type	Motor		Curve		Nominal voltage range	Frequency	Speed/rpm	Max. power input (1)	Max. current draw (1)	Max. operative range	Perm. amb. temp.	Electr. connection
					VAC	Hz	rpm	kW	A	Pa	°C	p. 428
*3G 990	M3G 150-NA		A	3~	380-480	50/60	720	2.00	3.00	150	-25 to +60	M)

subject to alterations

(1) Nominal data in operating point with maximum load and 400 VAC

Curves

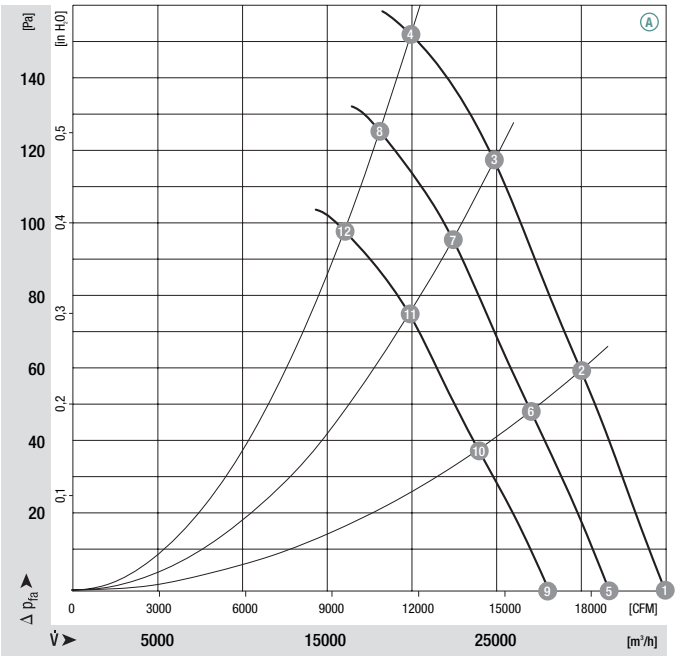

	n [rpm]	P_1 [kW]	I [A]	Lp_A [dB(A)]	η_{tL} [%]
A 1	720	1.47	2.20	74	—
A 2	720	1.72	2.60	75	79
A 3	720	1.89	2.90	77	73
A 4	720	1.99	3.00	78	60
A 5	655	1.10	1.70	72	—
A 6	655	1.29	2.00	73	75
A 7	655	1.40	2.10	74	73
A 8	655	1.51	2.30	76	60
A 9	580	0.77	1.20	73	—
A 10	580	0.90	1.40	74	75
A 11	580	0.97	1.50	75	73
A 12	580	1.05	1.60	77	60

ebmpapst

- **Technical features:**
  - PFC (passive)
  - Integrated PID controller
  - Control input 0-10 VDC / PWM
  - Input for sensor 0-10 V or 4-20 mA
  - Slave output 0-10 V max. 3 mA
  - Output 20 VDC (±20 %) max. 50 mA
  - Output 10 VDC (+10 %) max. 10 mA
  - RS485 ebmBUS
  - Alarm relay
  - Line undervoltage / phase failure detection
  - Motor current limitation
  - Over-temperature protected electronics / motor
  - Locked rotor protection
  - Soft start
- **EMC:** Interference emission acc. to EN 61000-6-3
  Interference immunity acc. to EN 61000-6-2
  Harmonics acc. to EN 61000-3-2/3
- **Leakage current:** < 3.5 mA acc. to EN 61800-5-1
- **Connection leads:** Via terminal strip
- **Protection class:** I (acc. to EN 61800-5-1)
- **Product conforming to standard:** CE
- **Approvals:** VDE, UL, CSA, GOST

Direction of air flow

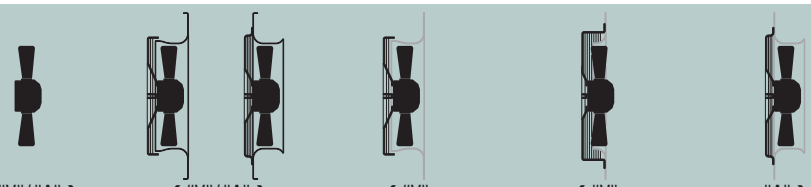

	❮ "V"/"A" ❯ Without attachments	❮ "V"/"A" ❯ With full square nozzle	❮ "V" With guard grille for full nozzle	❮ "V" With guard grille for short nozzle	"A" ❯ With guard grille for full nozzle
"V"	A3G 990-AE03 -03	W3G 990-CE03 -03	S3G 990-BE03 -03	—	—
"A"	A3G 990-AE03 -04	W3G 990-CE03 -04	—	—	S3G 990-CE03 -04

Drawings p. 298 f.
Electr. connection p. 428

EC axial fans mains-powered

S series, Ø 990, drawings for direction of air flow "V"

Without attachments

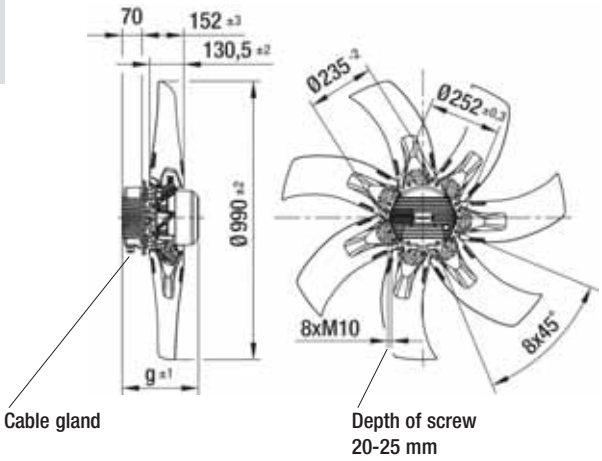

‹ "V"

Type	Mass [kg]	g
A3G 990-AC04 -13	26.5	219.5
A3G 990-AC03 -03	26.5	219.5
A3G 990-AD11 -13	30.5	249.5
A3G 990-AD05 -03	30.5	249.5
A3G 990-AE03 -03	35.0	284.5

With full square nozzle

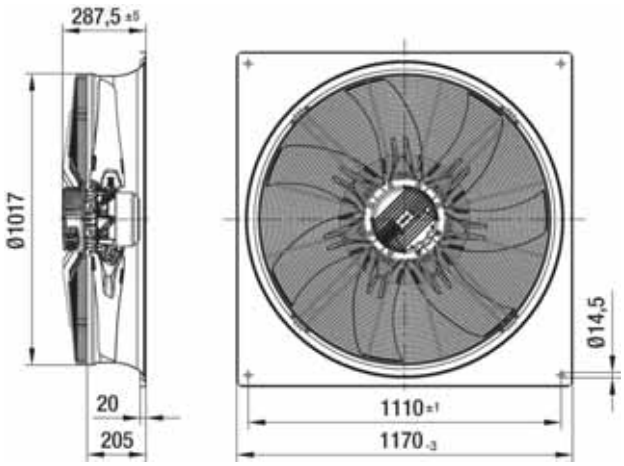

‹ "V"

Type	Mass [kg]
W3G 990-CC04 -13	55.0
W3G 990-CC03 -03	55.0
W3G 990-CD11 -13	59.0
W3G 990-CD05 -03	59.0
W3G 990-CE03 -03	63.5

With guard grille for full nozzle

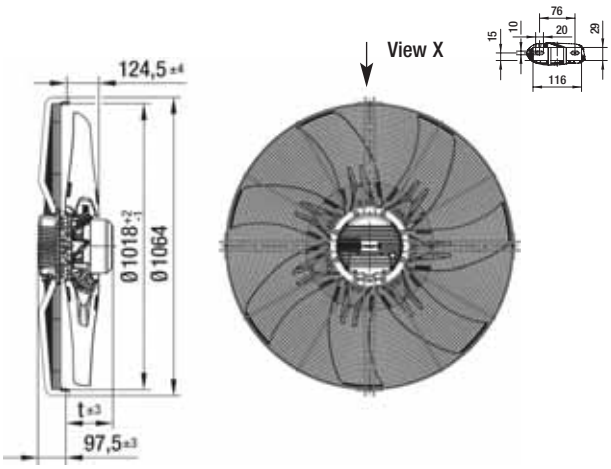

‹ "V"

Type	Mass [kg]	t
S3G 990-BC04 -13	36.5	122.0
S3G 990-BC03 -03	36.5	122.0
S3G 990-BD11 -13	40.5	152.0
S3G 990-BD05 -03	40.5	152.0
S3G 990-BE03 -03	45.0	187.0

ebmpapst

EC axial fans mains-powered

S series, Ø 990, drawings for direction of air flow "A"

Without attachments

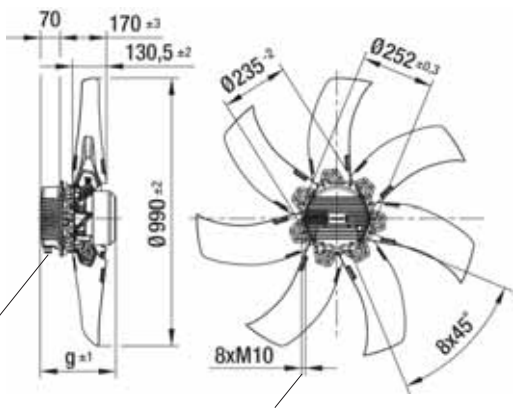

Cable gland

Depth of screw
20-25 mm

"A" ›

Type	Mass [kg]	g
A3G 990-AC04 -14	26.5	219.5
A3G 990-AC03 -04	26.5	219.5
A3G 990-AD11 -14	30.5	249.5
A3G 990-AD05 -04	30.5	249.5
A3G 990-AE03 -04	35.0	284.5

With full square nozzle

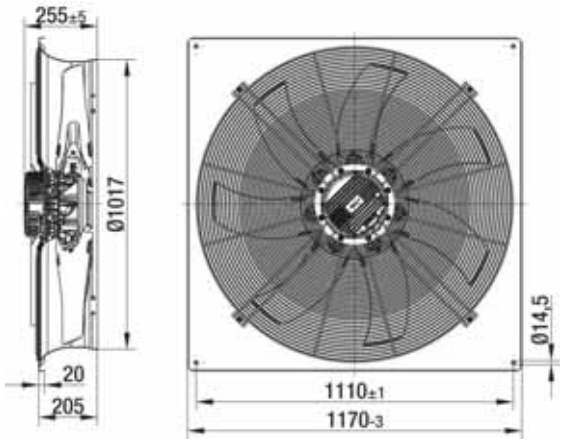

"A" ›

Type	Mass [kg]
W3G 990-CC04 -14	56.0
W3G 990-CC03 -04	56.0
W3G 990-CD11 -14	60.0
W3G 990-CD05 -04	60.0
W3G 990-CE03 -04	64.5

With guard grille for full nozzle

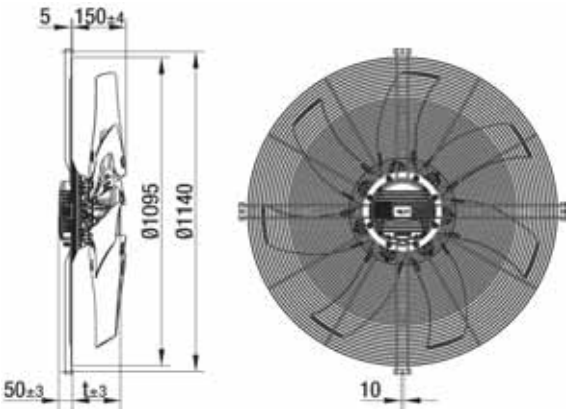

"A" ›

Type	Mass [kg]	t
S3G 990-CC04 -14	37.5	169.5
S3G 990-CC03 -04	37.5	169.5
S3G 990-CD11 -14	41.5	199.5
S3G 990-CD05 -04	41.5	199.5
S3G 990-CE03 -04	46.0	234.5

Table of options

		Standard	Multi-function	Frigo	Plug terminal	UL and CSA
	= available ex stock	Page 302	Page 304	Page 305	Page 306	Page 307
Foot measure	18 mm (height 48 mm)		●	●		
	26 mm (height 51 mm)	●	●		●	●
Mount	A side (3 x M4, Ø 71.4 mm)		●			
	B side (3 x M4, Ø 71.4 mm)		●	●		
	Thread ends, A side (4 x M4)	●	●	●	●	●
Electr. terminals	Jacketed cable (3 x 0.5 mm²)	450 mm	1500 mm	1500 mm		
	Plug terminal (3 x 0.5 mm²)				●	
	UL jacketed cable (3 x AWG20)					450 mm

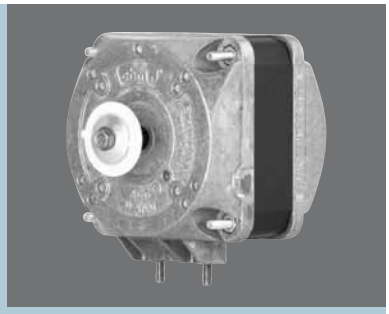

Square shaded-pole motors (Q-motors)

Standard design	302
Multi-function design	304
Frigo design	305
Plug terminal design	306
UL and CSA design	307
Air performance curves	308

Square shaded-pole motors

Standard design

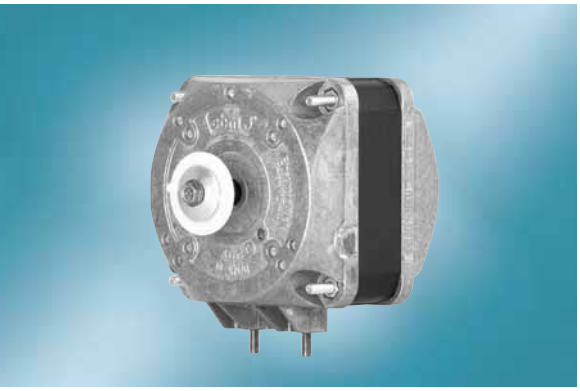

- **Foot mounting:** Track dimension 26 mm (height 51 mm)
- **Type of protection:** IP 42
- **Electrical connection:** Jacketed cable 3 x 0.5 mm² with brass lead tips
- **Product conforming to standard:** CE
- **Approvals:** VDE
- **Curves:** Page 308

Nominal data	Combination: Motor axial impeller	Curve	Nominal voltage	Frequency	Speed/rpm	Power output	Power input	Current draw	Perm. amb. temp.	Mass	Dimensions		
Type			VAC	Hz	rpm	W	W	A	°C	kg	B	E	K
M4Q045-BD01 -01	A	A B	1~ 230 1~ 230	50 60	1300 1550	5 5	29 26	0.19 0.17	-30 to +40 -30 to +40	0.9	76	42	15
M4Q045-CA01 -01	B	C D	1~ 230 1~ 230	50 60	1300 1550	7 8	31 30	0.20 0.20	-30 to +40 -30 to +40	1.1	82	42	15
M4Q045-CA03 -51	C	E F	1~ 230 1~ 230	50 60	1300 1550	10 9	36 34	0.25 0.22	-30 to +40 -30 to +40	1.2	82	42	15
M4Q045-CF01 -01	D	G H	1~ 230 1~ 230	50 60	1300 1550	16 16	60 58	0.42 0.36	-30 to +40 -30 to +40	1.3	87	42	15
M4Q045-DA01 -01 (1)	E	I J	1~ 230 1~ 230	50 60	1300 1550	18 18	70 62	0.48 0.42	-30 to +40 -30 to +40	1.6	93	54	15
M4Q045-DA05 -01 (1)	F	K L	1~ 230 1~ 230	50 60	1300 1550	23 25	86 80	0.62 0.55	-30 to +40 -30 to +40	1.6	93	54	15
M4Q045-EA01 -01 (1)	G	M N	1~ 230 1~ 230	50 60	1300 1550	25 26	90 80	0.62 0.55	-30 to +40 -30 to +40	2.0	103	59	16
M4Q045-EF01 -01 (1)	H	O P	1~ 230 1~ 230	50 60	1300 1550	34 34	110 100	0.75 0.65	-30 to +40 -30 to +40	2.2	125	79	33

subject to alterations

(1) Foot mounting possible on A or B side

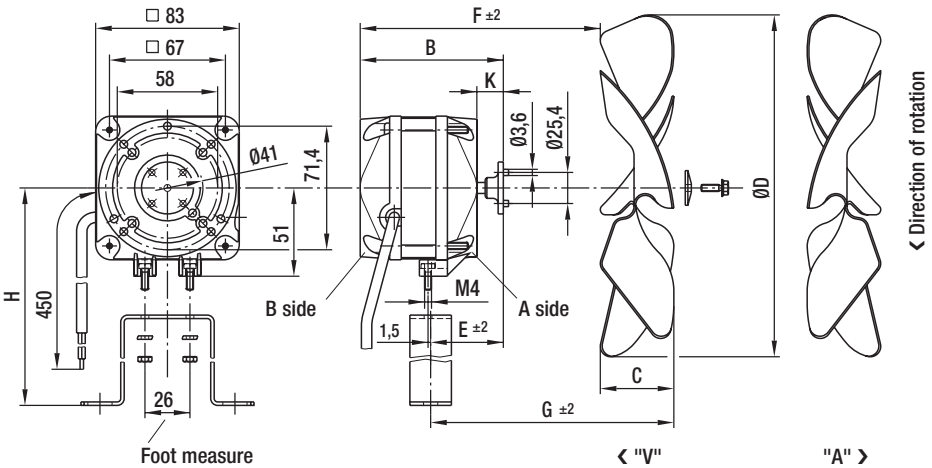

Axial impeller p. 377
Guard grille p. 378
Basket guard grille p. 378
Wall ring p. 379
Mounting bracket p. 380

ebmpapst

Valid for all designs:

- **Material:** Housing made of die-cast aluminium
  Stator pack: Coated in black
- **Direction of air flow:** "V" or "A" (depending on axial impeller used)
- **Direction of rotation:** Counter-clockwise, seen on shaft end
- **Insulation class:** "B"
- **Mounting position:** Any, preferrably horizontal
- **Condensate discharges:** None
- **Mode of operation:** Continuous operation (S1)
- **Bearing:** Self-adjusting calotte sleeve bearing (mean service life of 30,000 hours in horizontal installation position)
- **Motor protection:** Impedance protection (combination A-C) or thermal overload protector internally switched (combination D-H)
- **Protection class:** I
- **Mounting:** Guard grille and wall ring are mounted onto the protruding thread ends of the A side. The Q-motor can also be screwed on via the mounting flanges (integrated in the bearing shields).
- **Axial impeller mounting:** Mounted to the motor shaft using a plastic adapter with pulling peg and an M4 screw (combination A-D) or M5 (combination E-H) screw.
- **Power specifications:** At 60 Hz, the blade angle of the axial impellers must be reduced by 6° each.

Axial impellers		Blade angle 22° ± 1°30´				Blade angle 28° ± 1°30´				Blade angle 34° ± 1°30´			
Ø D	H	F	G	C	m³/h (2)	F	G	C	m³/h (2)	F	G	C	m³/h (2)
154	90	61	56	27.5	60	56	59	32.0	100	54	62	37.0	140
172	103	58	57	31.0	120	55	59	36.0	180	53	63	42.0	230
200	123	58	58	32.0	190	55	60	37.5	300	—	—	—	—
200	123	65	58	32.0	190	62	60	37.5	300	59	64	45.0	400
230	123	64	62	35.0	500	—	—	—	—	—	—	—	—
230	123	64	62	35.0	500	60	65	43.0	630	52	68	50.0	820
254	135	64	62	37.0	580	—	—	—	—	—	—	—	—
254	135	70	62	37.0	580	65	66	45.0	840	—	—	—	—
254	135	76	74	37.0	580	72	78	45.0	840	67	80	52.0	1070
300	160	75	79	43.0	1000	—	—	—	—	—	—	—	—
300	160	75	79	43.0	1000	67	81	53.5	1400	—	—	—	—
300	160	86	84	43.0	1000	77	86	53.5	1400	—	—	—	—
300	160	108	104	43.0	1000	104	106	53.5	1400	95	112	61.0	1700

(2) established at counterpressure of 20 Pa

Square shaded-pole motors

Multi-function design

- **Foot mounting:** Track dimension 26 mm (height 51 mm) or 18 mm (height 48 mm) possible
- **Bearing shields:** A and B-sides, tapped holes 3 x M4, diameter of pitch circle 71.4 mm; mounting of guard grille and wall ring on A-side bearing shield; opposite M4 are securely installed in the feet (knurled hex nuts are not included in delivery scope)
- **Type of protection:** IP 42
- **Electrical connection:** Jacketed cable 3 x 0.5 mm² with brass lead tips
- **Product conforming to standard:** CE
- **Approvals:** VDE
- **Curves:** Page 308

Nominal data	Combination: Motor axial impeller	Curve	Nominal voltage	Frequency	Speed/rpm	Power output	Power input	Current draw	Perm. amb. temp.	Mass	Dimensions				
Type	p.302		VAC	Hz	rpm	W	W	A	°C	kg	A	B	E	F	K
M4Q045-BD01 -75	A	A	1~ 230	50	1300	5	29	0.19	-30 to +40	0.9	43	76	43.5	12	15.0
		B	1~ 230	60	1550	5	26	0.17	-30 to +40						
M4Q045-CA01 -75	B	C	1~ 230	50	1300	7	31	0.20	-30 to +40	1.1	49	82	43.5	10	15.0
		D	1~ 230	60	1550	8	30	0.20	-30 to +40						
M4Q045-CA03 -75	C	E	1~ 230	50	1300	10	36	0.25	-30 to +40	1.2	49	82	43.5	10	15.0
		F	1~ 230	60	1550	9	34	0.22	-30 to +40						
M4Q045-CF01 -75	D	G	1~ 230	50	1300	16	60	0.42	-30 to +40	1.3	54	87	43.5	10	15.0
		H	1~ 230	60	1550	16	58	0.36	-30 to +40						
M4Q045-DA01 -75	E	I	1~ 230	50	1300	18	70	0.48	-30 to +40	1.6	59	93	43.5	10	15.0
		J	1~ 230	60	1550	18	62	0.42	-30 to +40						
M4Q045-DA05 -75	F	K	1~ 230	50	1300	23	86	0.62	-30 to +40	1.6	59	93	43.5	10	15.0
		L	1~ 230	60	1550	25	80	0.55	-30 to +40						
M4Q045-EA01 -75	G	M	1~ 230	50	1300	25	90	0.62	-30 to +40	2.0	69	103	44.0	10	15.5
		N	1~ 230	60	1550	26	80	0.55	-30 to +40						
M4Q045-EF01 -75	H	O	1~ 230	50	1300	34	110	0.75	-30 to +40	2.2	92	125	61.0	10	33.0
		P	1~ 230	60	1550	34	100	0.65	-30 to +40						

subject to alterations

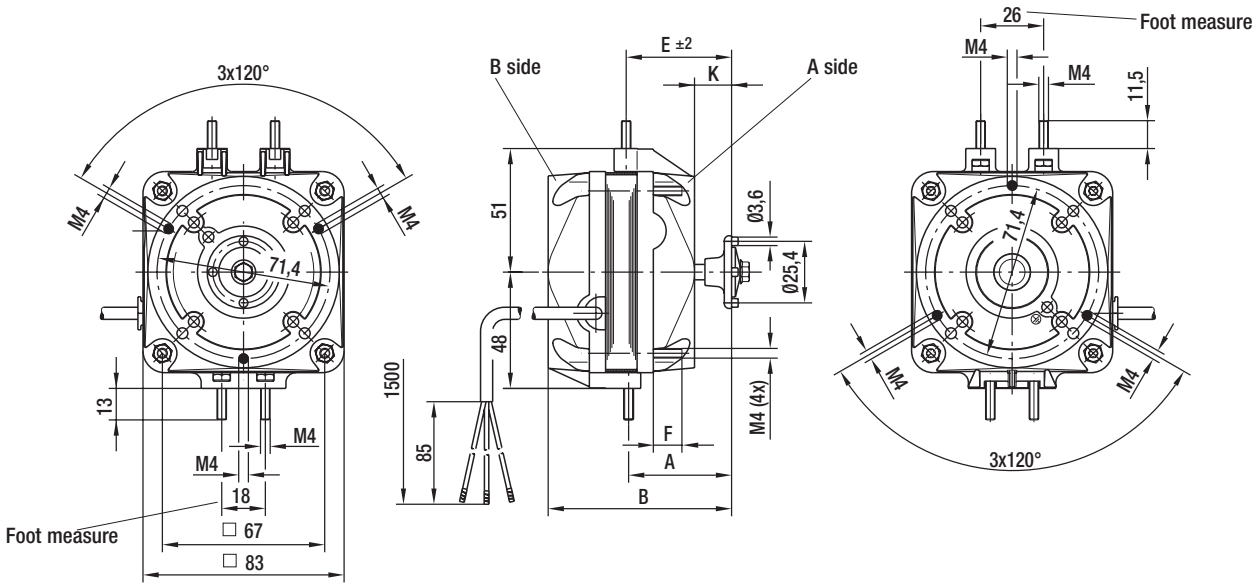

Axial impeller p. 377
Guard grille p. 378
Basket guard grille p. 378
Wall ring p. 379
Mounting bracket p. 380

ebmpapst

Square shaded-pole motors

Frigo design (specially for spare parts requirements)

- **Foot mounting:** Track dimension 18 mm (height 48 mm)
- **Bearing shields:** B-side, tapped holes 3 x M4, diameter of pitch circle 71.4 mm; mounting of guard grille and wall ring on A-side bearing shield; M4 knurled hex nuts (2x) are enclosed in loose form
- **Type of protection:** IP 42
- **Electrical connection:** Jacketed cable 3 x 0.5 mm² with brass lead tips
- **Product conforming to standard:** CE
- **Approvals:** VDE
- **Curves:** Page 308

Nominal data	Combination: Motor axial impeller	Curve	Nominal voltage	Frequency	Speed/rpm	Power output	Power input	Current draw	Perm. amb. temp.	Mass	Dimensions			
Type	p.302		VAC	Hz	rpm	W	W	A	°C	kg	A	B	F	K
M4Q045-BD01 -A4	A	A	1~ 230	50	1300	5	29	0.19	-30 to +40	0.9	48.5	76	12	15
		B	1~ 230	60	1550	5	26	0.17	-30 to +40					
M4Q045-CA01 -N4	B	C	1~ 230	50	1300	7	31	0.20	-30 to +40	1.1	48.5	82	10	15
		D	1~ 230	60	1550	8	30	0.20	-30 to +40					
M4Q045-CA03 -A4	C	E	1~ 230	50	1300	10	36	0.25	-30 to +40	1.2	48.5	82	10	15
		F	1~ 230	60	1550	9	34	0.22	-30 to +40					
M4Q045-CF01 -A4	D	G	1~ 230	50	1300	16	60	0.42	-30 to +40	1.3	48.5	87	10	15
		H	1~ 230	60	1550	16	58	0.36	-30 to +40					
M4Q045-DA01 -A4	E	I	1~ 230	50	1300	18	70	0.48	-30 to +40	1.6	48.5	93	10	15
		J	1~ 230	60	1550	18	62	0.42	-30 to +40					
M4Q045-DA05 -A4	F	K	1~ 230	50	1300	23	86	0.62	-30 to +40	1.6	48.5	93	10	15
		L	1~ 230	60	1550	25	80	0.55	-30 to +40					
M4Q045-EA01 -A4	G	M	1~ 230	50	1300	25	90	0.62	-30 to +40	2.0	49.0	103	10	16
		N	1~ 230	60	1550	26	80	0.55	-30 to +40					
M4Q045-EF01 -A4	H	O	1~ 230	50	1300	34	110	0.75	-30 to +40	2.2	66.0	125	10	33
		P	1~ 230	60	1550	34	100	0.65	-30 to +40					

subject to alterations

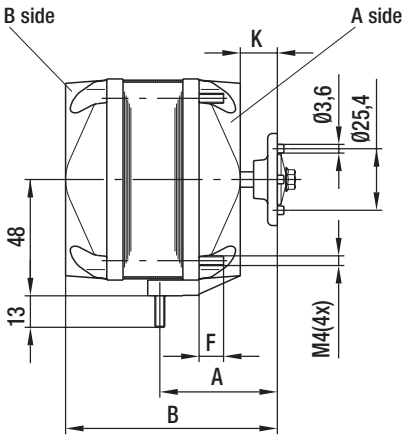

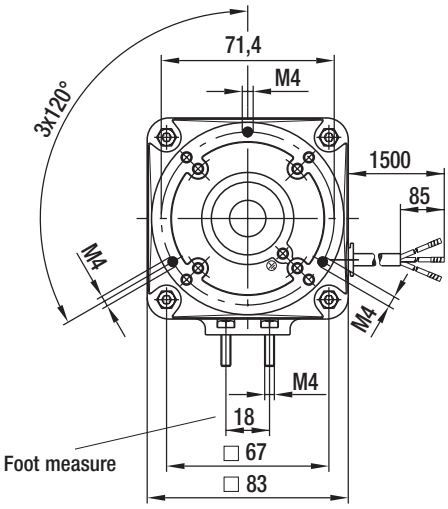

Square shaded-pole motors

Plug terminal design

- **Foot mounting:** Track dimension 26 mm (height 51 mm)
- **Type of protection:** IP 42
- **Electrical connection:** Rast 5.6 mm terminal connector, 2.8 x 0.5 mm blade terminal; connection lines available in 420 mm to 4970 mm lengths
- **Product conforming to standard:** CE
- **Approvals:** VDE (put into operation with ebm-papst connection line only!)
- **Curves:** Page 308

Nominal data	Combination: Motor axial impeller	Curve	Nominal voltage	Frequency	Speed/rpm	Power output	Power input	Current draw	Perm. amb. temp.	Mass	Dimensions			
Type	p.302		VAC	Hz	rpm	W	W	A	°C	kg	B	E	F	K
M4Q045-BD01 -08	A	A B	1~ 230 1~ 230	50 60	1300 1550	5 5	29 26	0.19 0.17	-30 to +40 -30 to +40	0.9	76	43.5	12	15
M4Q045-CA01 -08	B	C D	1~ 230 1~ 230	50 60	1300 1550	7 8	31 30	0.20 0.20	-30 to +40 -30 to +40	1.1	82	43.5	10	15
M4Q045-CA03 -08	C	E F	1~ 230 1~ 230	50 60	1300 1550	10 9	36 34	0.25 0.22	-30 to +40 -30 to +40	1.2	82	43.5	10	15
M4Q045-CF01 -08	D	G H	1~ 230 1~ 230	50 60	1300 1550	16 16	60 58	0.42 0.36	-30 to +40 -30 to +40	1.3	87	43.5	10	15
M4Q045-DA01 -52 (1)	E	I J	1~ 230 1~ 230	50 60	1300 1550	18 18	70 62	0.48 0.42	-30 to +40 -30 to +40	1.6	93	43.5	10	15
M4Q045-DA05 -52 (1)	F	K L	1~ 230 1~ 230	50 60	1300 1550	23 25	86 80	0.62 0.55	-30 to +40 -30 to +40	1.6	93	43.5	10	15
M4Q045-EA01 -52 (1)	G	M N	1~ 230 1~ 230	50 60	1300 1550	25 26	90 80	0.62 0.55	-30 to +40 -30 to +40	2.0	103	44.0	10	16
M4Q045-EF01 -52 (1)	H	O P	1~ 230 1~ 230	50 60	1300 1550	34 34	110 100	0.75 0.65	-30 to +40 -30 to +40	2.2	125	61.0	10	33

subject to alterations

(1) Foot mounting possible on A or B side

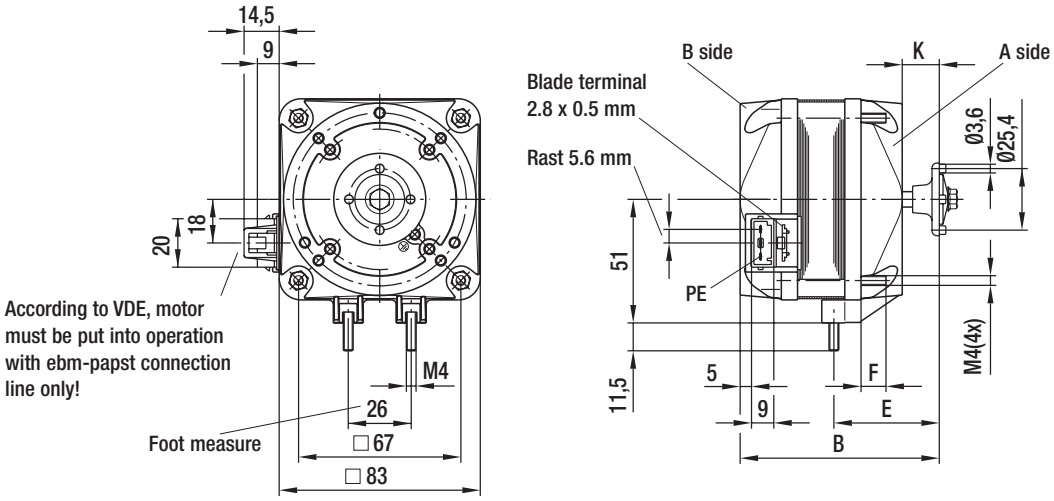

ebmpapst

Connection lead p. 376 | Axial impeller p. 377 | Guard grille p. 378 | Basket guard grille p. 378 | Wall ring p. 379 | Mounting bracket p. 380

Square shaded-pole motors

UL and CSA design

- **Description:** Designs with UL/CSA approvals; connection lines, temperature monitor and dynamo wire are UL/CSA-approved components
- **Foot mounting:** Track dimension 26 mm (height 51 mm)
- **Type of protection:** IP 42
- **Electrical connection:** Jacketed cable 3 x AWG20 with brass lead tips
- **Product conforming to standard:** UL547, UL1004, CSA C22.2 No. 100, CSA C22.2 No. 77, CE
- **Approvals:** UL, CSA
- **Curves:** Page 308
- **Drawing:** See standard design on page 302

Nominal data	Combination: Motor axial impeller	Curve	Nominal voltage	Frequency	Speed/rpm	Power output	Power input	Current draw	Perm. amb. temp.	Mass	Dimensions		
Type	p.302		VAC	Hz	rpm	W	W	A	°C	kg	B	E	K
M4Q045-BD03 -04 (2)	A	A	1~ 115	50	1300	5	29	0.38	-30 to +40	0.9	76	42	15
		B	1~ 115	60	1550	5	26	0.35	-30 to +40				
M4Q045-BD01 -04 (2)	A	A	1~ 230	50	1300	5	29	0.19	-30 to +40	0.9	76	42	15
		B	1~ 230	60	1550	5	26	0.17	-30 to +40				
M4Q045-CA17 -04 (2)	B	C	1~ 115	50	1300	7	31	0.40	-30 to +40	1.1	82	42	15
		D	1~ 115	60	1550	8	30	0.40	-30 to +40				
M4Q045-CA01 -04 (2)	B	C	1~ 230	50	1300	7	31	0.20	-30 to +40	1.1	82	42	15
		D	1~ 230	60	1550	8	30	0.20	-30 to +40				
M4Q045-CA27 -04 (2)	C	E	1~ 115	50	1300	10	36	0.50	-30 to +40	1.2	82	42	15
		F	1~ 115	60	1550	9	34	0.45	-30 to +40				
M4Q045-CA25 -04 (2)	C	E	1~ 230	50	1300	10	36	0.25	-30 to +40	1.2	82	42	15
		F	1~ 230	60	1550	9	34	0.22	-30 to +40				
M4Q045-CF07 -04 (2)	D	G	1~ 115	50	1300	16	60	0.80	-30 to +40	1.3	87	42	15
		H	1~ 115	60	1550	16	58	0.74	-30 to +40				
M4Q045-CF01 -04 (2)	D	G	1~ 230	50	1300	16	60	0.42	-30 to +40	1.3	87	42	15
		H	1~ 230	60	1550	16	58	0.36	-30 to +40				
M4Q045-DA11 -04 (1)(3)	E	I	1~ 115	50	1300	18	70	0.98	-30 to +40	1.6	93	54	15
		J	1~ 115	60	1550	18	62	0.87	-30 to +40				
M4Q045-DA01 -04 (1)(3)	E	I	1~ 230	50	1300	18	70	0.48	-30 to +40	1.6	93	54	15
		J	1~ 230	60	1550	18	62	0.42	-30 to +40				
M4Q045-DA13 -04 (1)(3)	F	K	1~ 115	50	1300	23	86	1.25	-30 to +40	1.6	93	54	15
		L	1~ 115	60	1550	25	80	1.10	-30 to +40				
M4Q045-DA05 -04 (1)(3)	F	K	1~ 230	50	1300	23	86	0.62	-30 to +40	1.6	93	54	15
		L	1~ 230	60	1550	25	80	0.55	-30 to +40				
M4Q045-EA03 -04 (1)(3)	G	M	1~ 115	50	1300	25	90	1.25	-30 to +40	2.0	103	59	16
		N	1~ 115	60	1550	26	80	1.10	-30 to +40				
M4Q045-EA01 -04 (1)(3)	G	M	1~ 230	50	1300	25	90	0.62	-30 to +40	2.0	103	59	16
		N	1~ 230	60	1550	26	80	0.55	-30 to +40				
M4Q045-EF03 -04 (1)(3)	H	O	1~ 115	50	1300	34	110	1.50	-30 to +40	2.2	125	79	33
		P	1~ 115	60	1550	34	100	1.35	-30 to +40				
M4Q045-EF01 -04 (1)(3)	H	O	1~ 230	50	1300	34	110	0.75	-30 to +40	2.2	125	79	33
		P	1~ 230	60	1550	34	100	0.65	-30 to +40				

subject to alterations (1) A and B-side foot mounting possible (2) File No. E 171165 (3) File No. E 76226

Axial impeller p. 377
Guard grille p. 378
Basket guard grille p. 378
Wall ring p. 379
Mounting bracket p. 380

Square shaded-pole motors

Air performance curves (measured in wall ring)

M4Q045-BD01-**, Ø 154, 50 Hz

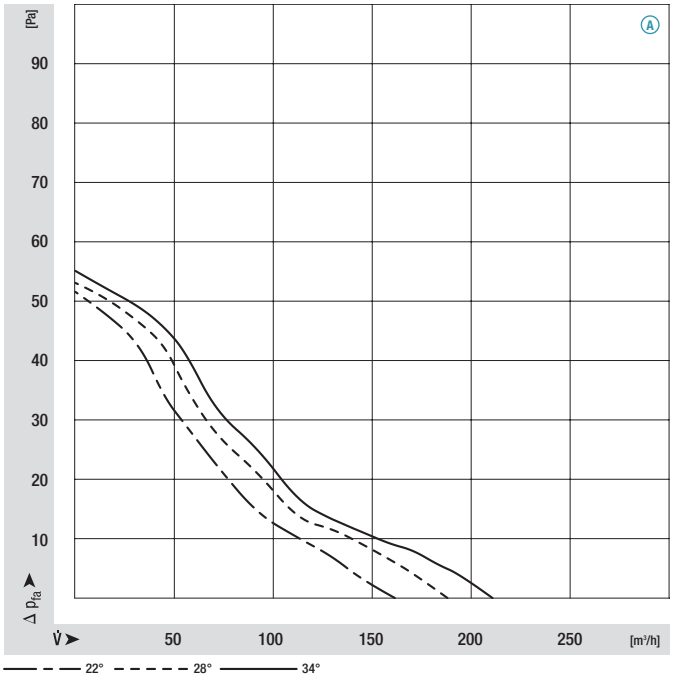

M4Q045-BD01-**, Ø 154, 60 Hz

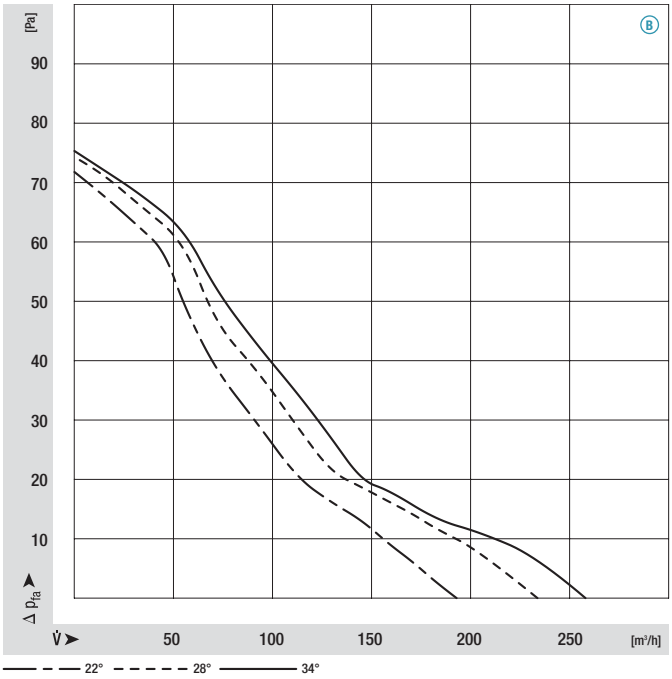

M4Q045-BD01-**, Ø 172, 50 Hz

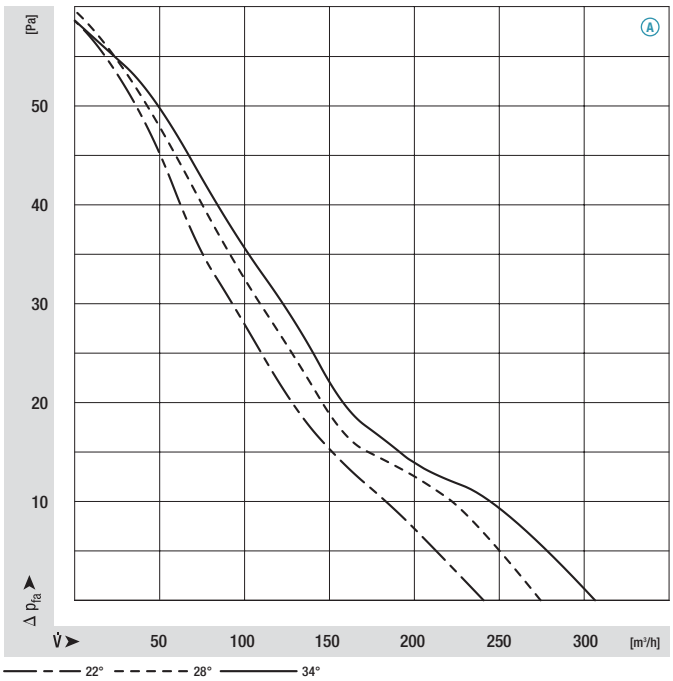

M4Q045-BD01-**, Ø 172, 60 Hz

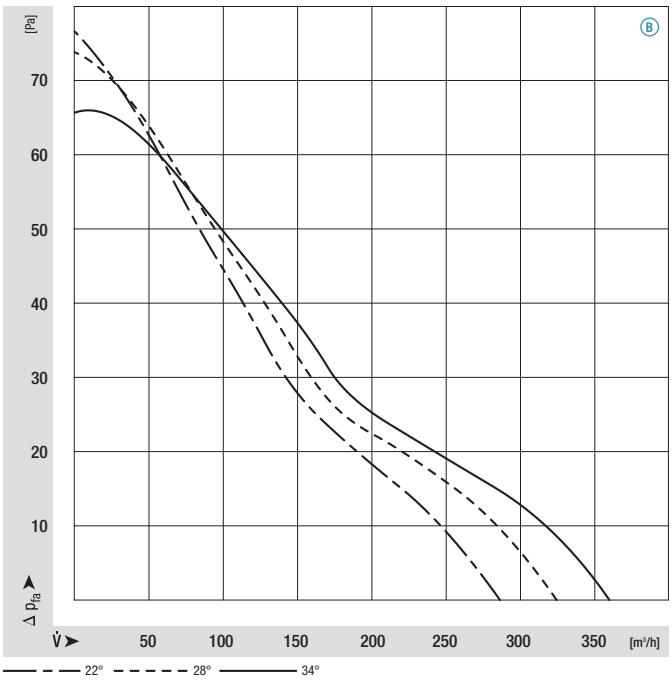

ebmpapst

M4Q045-BD01-**, Ø 200, 50 Hz

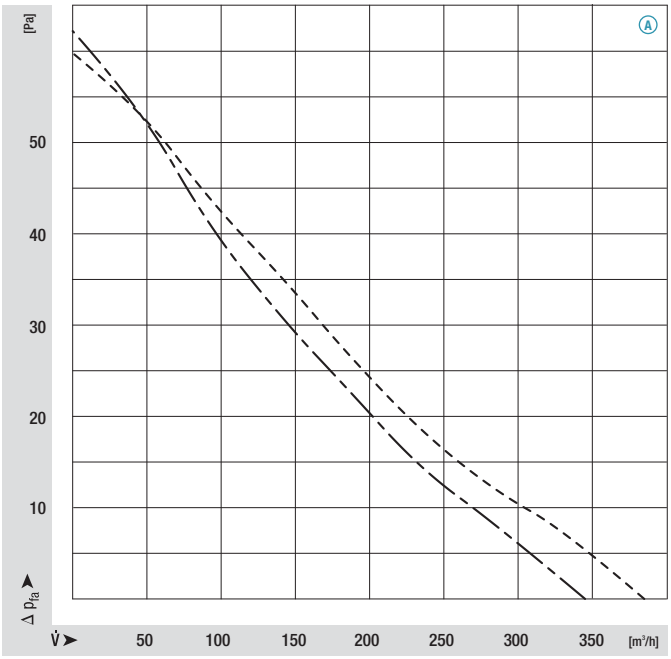

22° 28°

M4Q045-BD01-**, Ø 200, 60 Hz

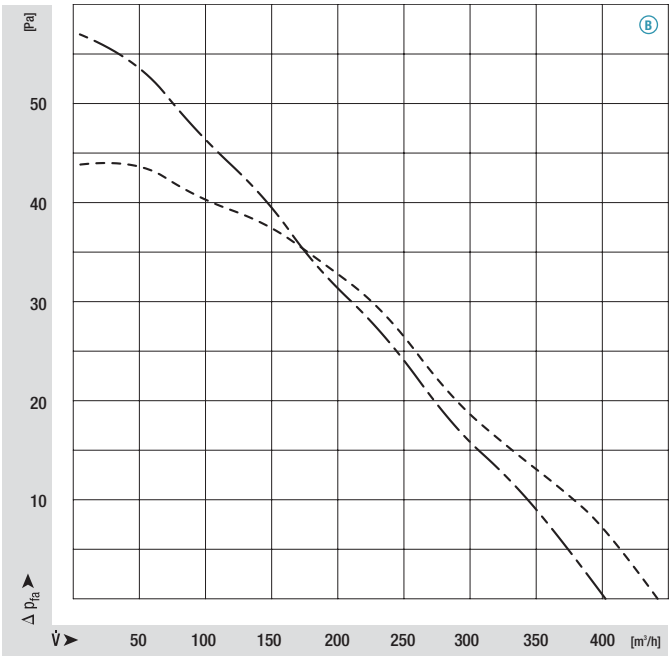

22° 28°

M4Q045-CA01-**, Ø 200, 50 Hz

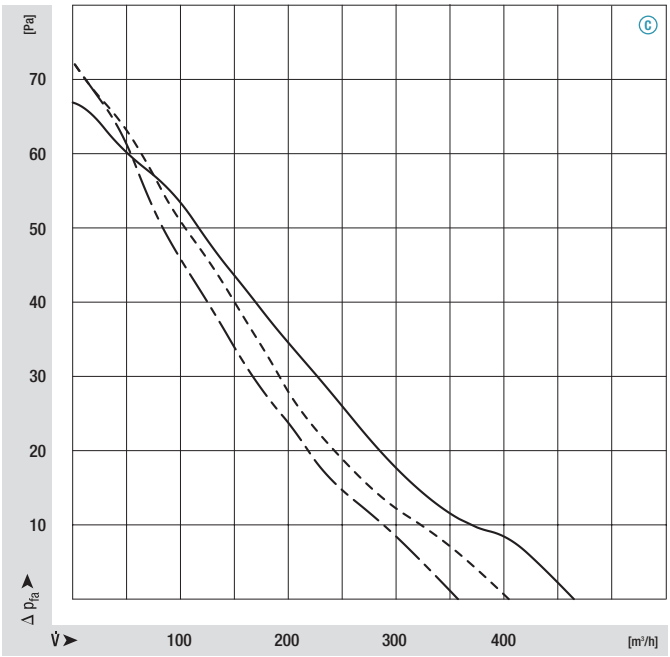

22° 28° 34°

M4Q045-CA01-**, Ø 200, 60 Hz

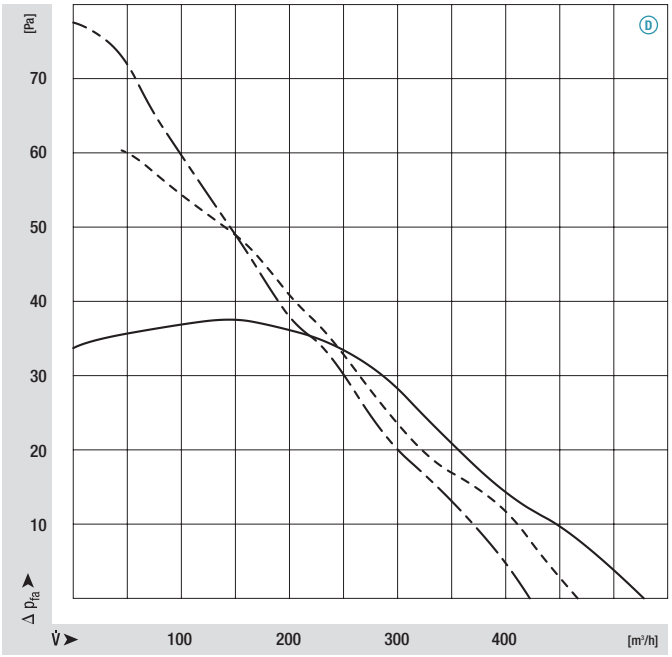

22° 28° 34°

Square shaded-pole motors

Air performance curves (measured in wall ring)

M4Q045-CA01-**, Ø 230, 50 Hz

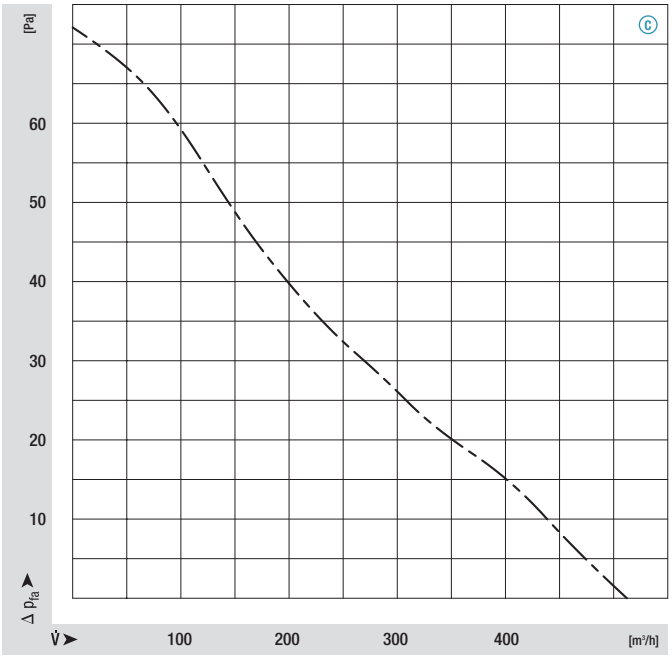

22°

M4Q045-CA01-**, Ø 230, 60 Hz

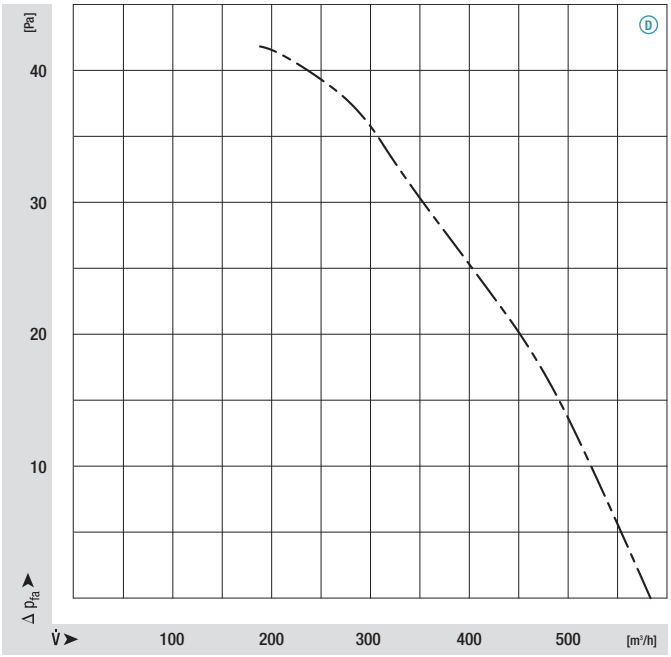

22°

M4Q045-CA03-**, Ø 230, 50 Hz

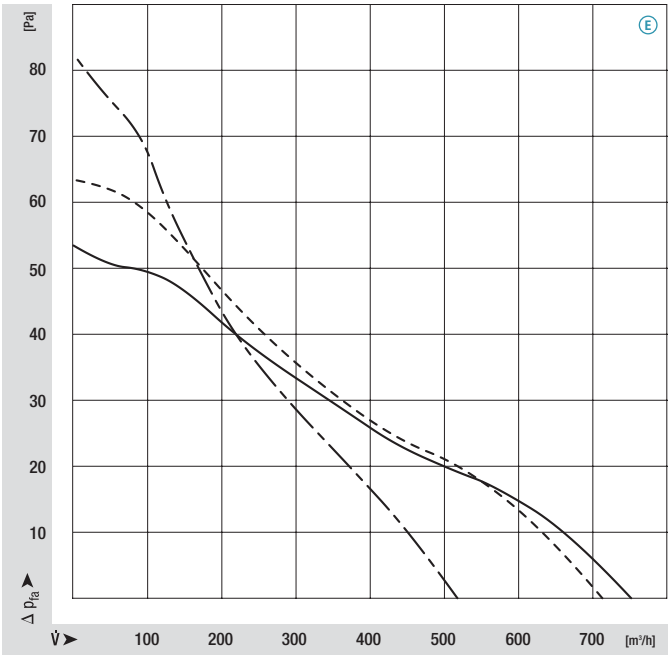

22° 28° 34°

M4Q045-CA03-**, Ø 230, 60 Hz

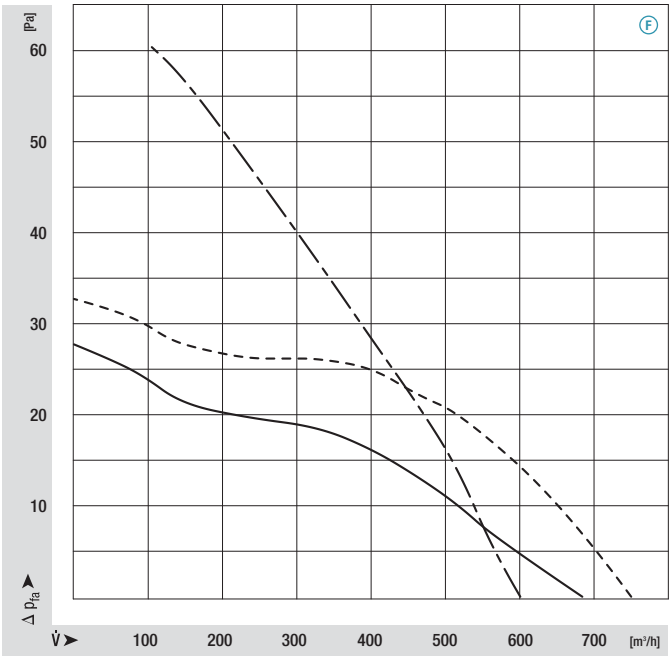

22° 28° 34°

ebmpapst

M4Q045-CA03-**, Ø 254, 50 Hz

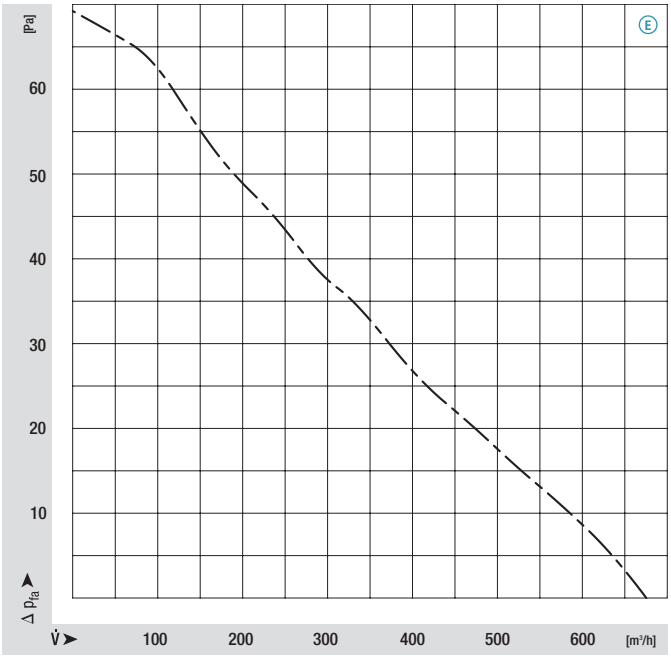

22°

M4Q045-CA03-**, Ø 254, 60 Hz

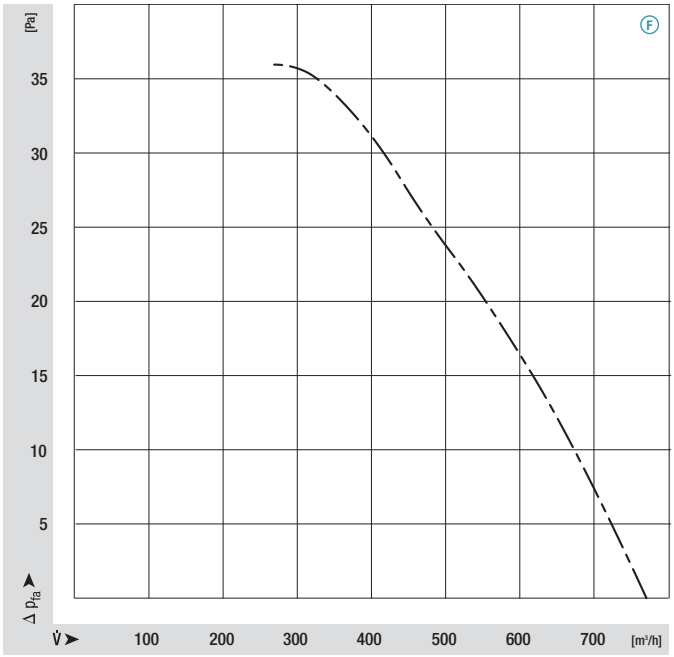

22°

M4Q045-CF01-**, Ø 254, 50 Hz

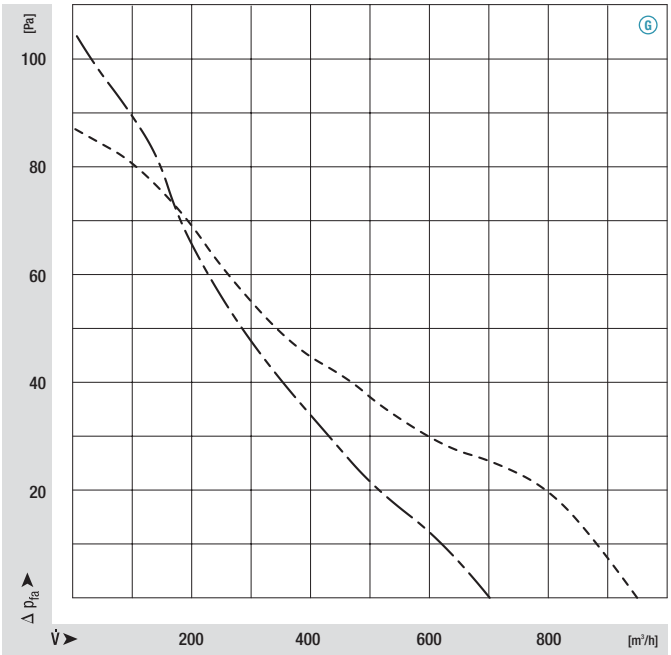

22° 28°

M4Q045-CF01-**, Ø 254, 60 Hz

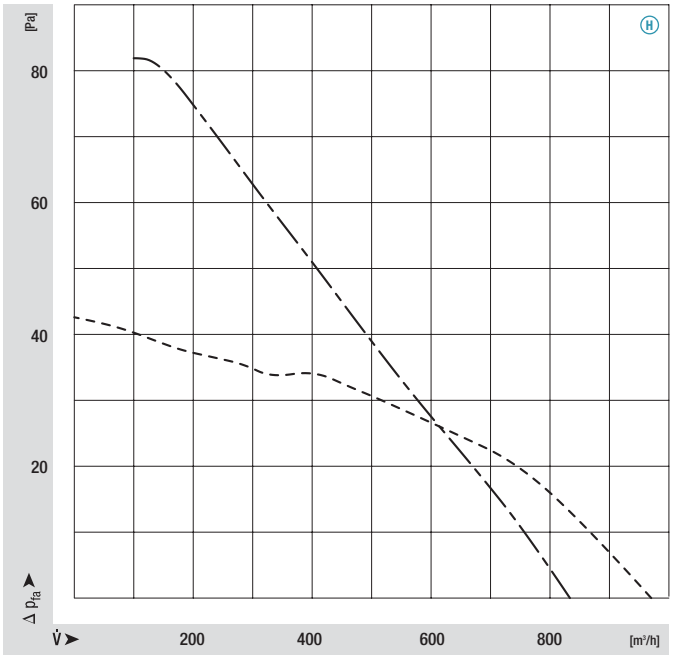

22° 28°

Square shaded-pole motors

Air performance curves (measured in wall ring)

M4Q045-DA01-, Ø 254, 50 Hz**

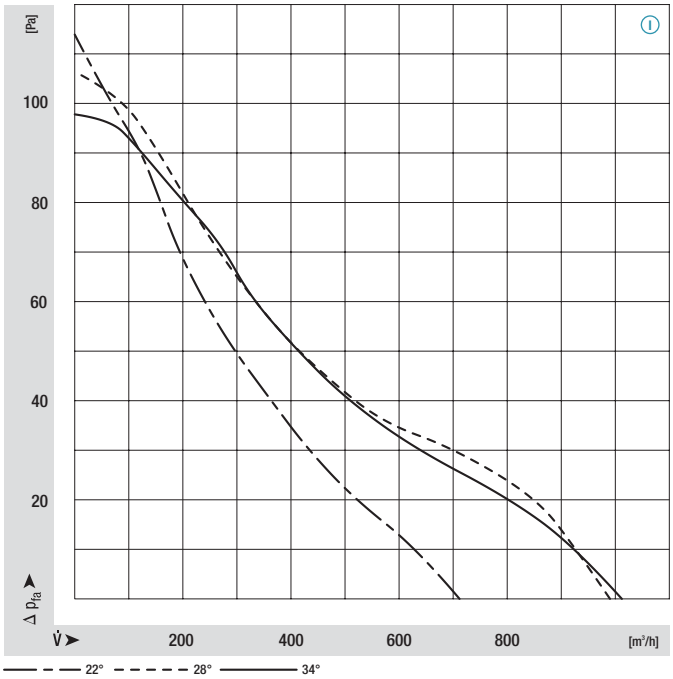

M4Q045-DA01-, Ø 254, 60 Hz**

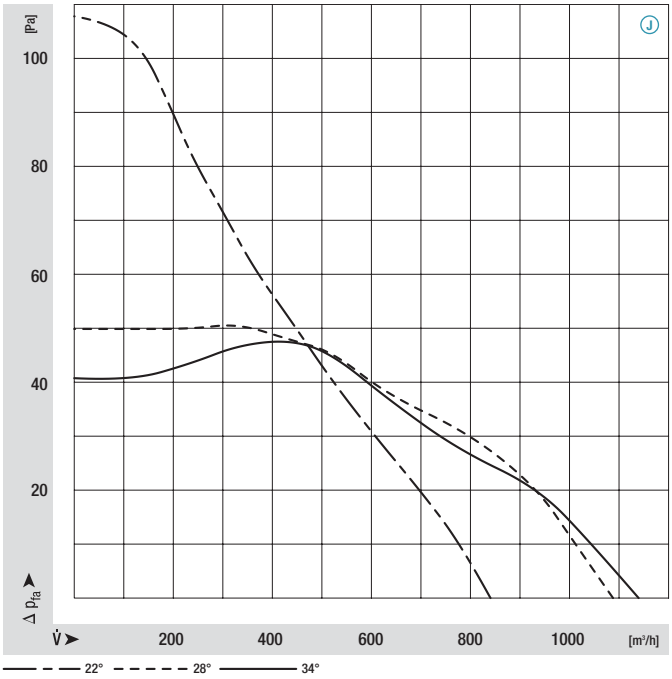

Ⓘ M4Q045-DA01- / Ⓚ -DA05-**, Ø 300, 50 Hz**

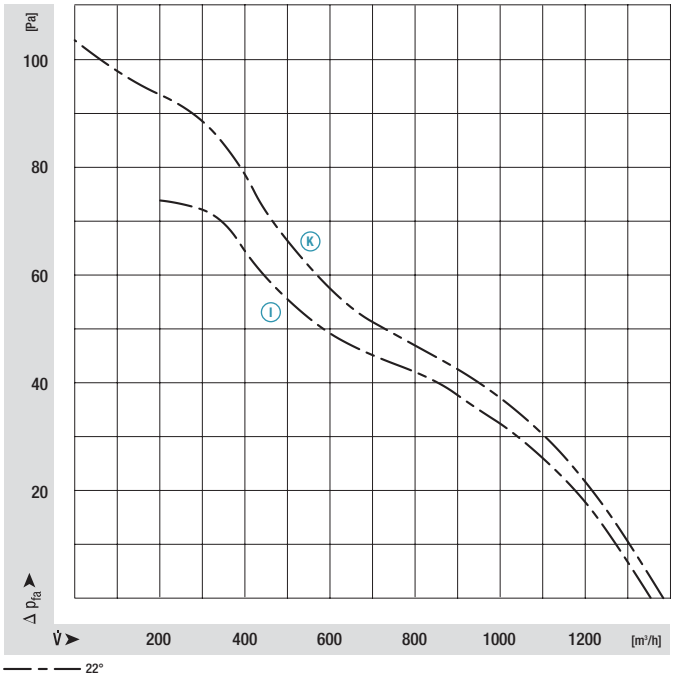

Ⓙ M4Q045-DA01- / Ⓛ -DA05-**, Ø 300, 60 Hz**

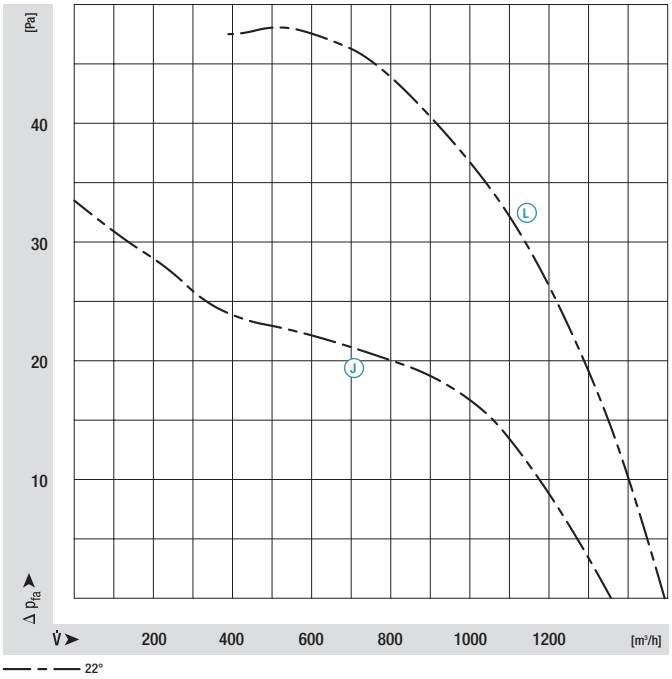

ebmpapst

M4Q045-EA01-**, Ø 300, 50 Hz

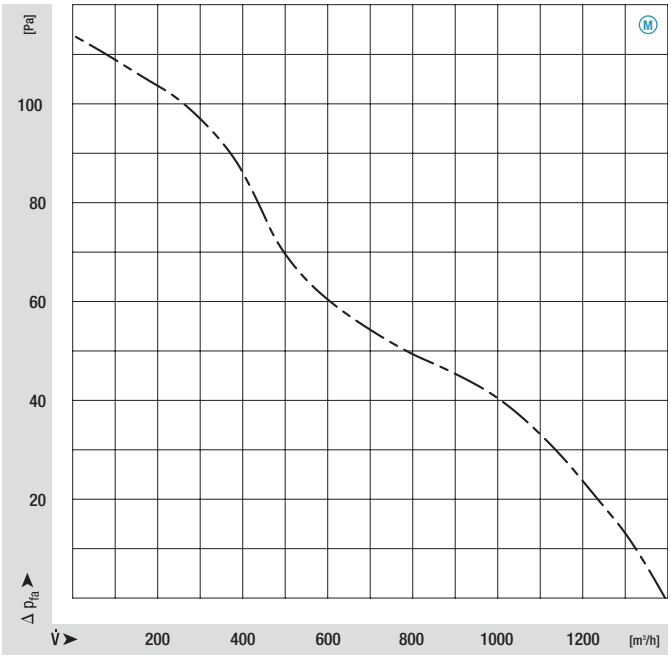

22°

M4Q045-EA01-**, Ø 300, 60 Hz

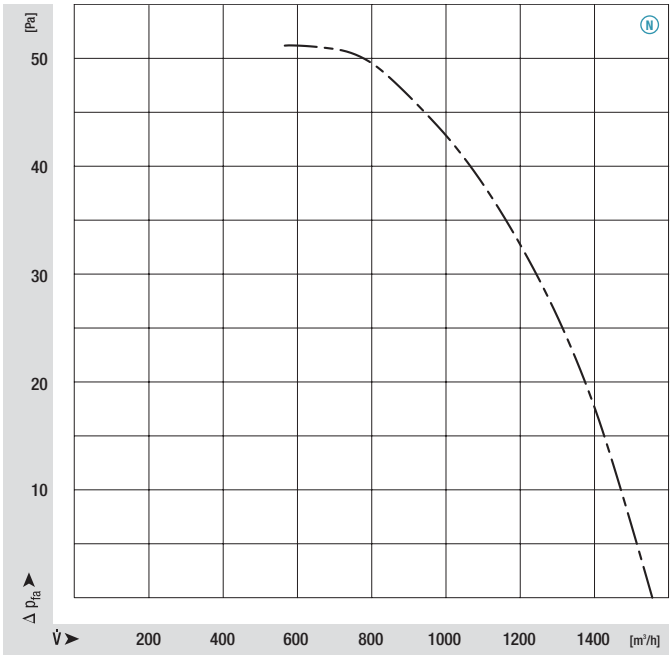

22°

M4Q045-EF01-**, Ø 300, 50 Hz

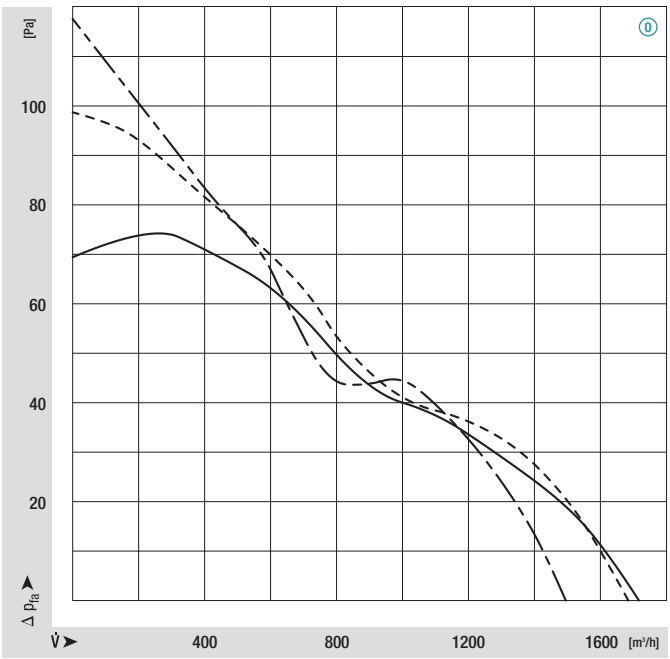

22° 28° 34°

M4Q045-EF01-**, Ø 300, 60 Hz

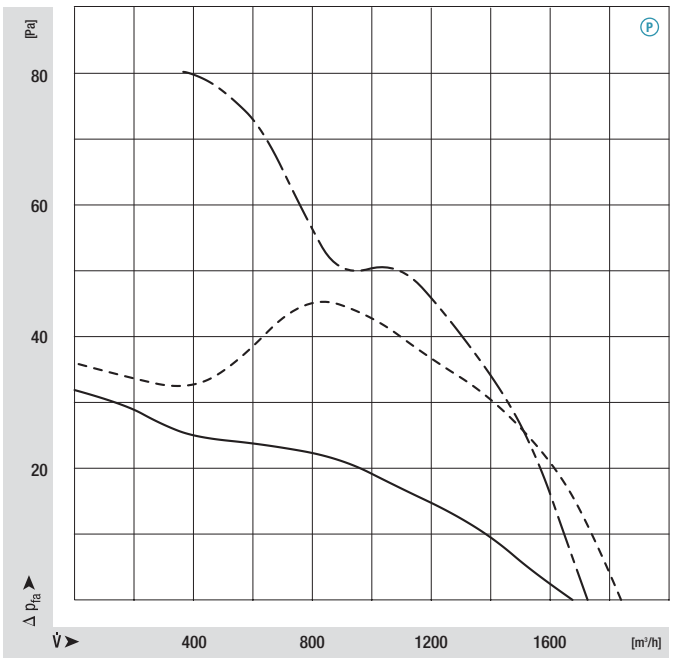

22° 28° 34°

Energy-saving motors (ESM)

Energy-saving motors (ESM)	316
Air performance curves	320
Energy-saving axial fans	326

Energy-saving motors (ESM)

- **Material:** Housing made of die-cast aluminium
  Rotor: Coated in black
- **Direction of air flow:** "V" or "A" (depending on axial impeller used)
- **Direction of rotation:** Counter-clockwise, seen on shaft end
- **Type of protection:** IP 44
- **Insulation class:** "B"
- **Mounting position:** Any
- **Condensate discharges:** None
- **Mode of operation:** Continuous operation (S1)
- **Bearings:** Maintenance-free ball bearings

Nominal data	Curve	Nominal voltage	Frequency	Upper speed (1)	Lower speed (1)	Power input	Power output	Perm. amb. temp.	Mass
Type		**VAC**	**Hz**	**rpm**	**rpm**	**W**	**W**	**°C**	**kg**
M1G055-BD95 -12	A	1~ 115	50/60	2200	1500	22.0	15.0	-30 to +50	0.9
M1G055-BD91 -12	A	1~ 230							
M1G055-BD95 -16	B	1~ 115	50/60	1750	1300	22.0	12.5	-30 to +50	0.9
M1G055-BD91 -16	B	1~ 230							
M1G055-BD95 -21	C	1~ 115	50/60	1550	1100	21.0	10.4	-30 to +50	0.9
M1G055-BD91 -21	C	1~ 230							

subject to alterations (1) preprogrammed speeds

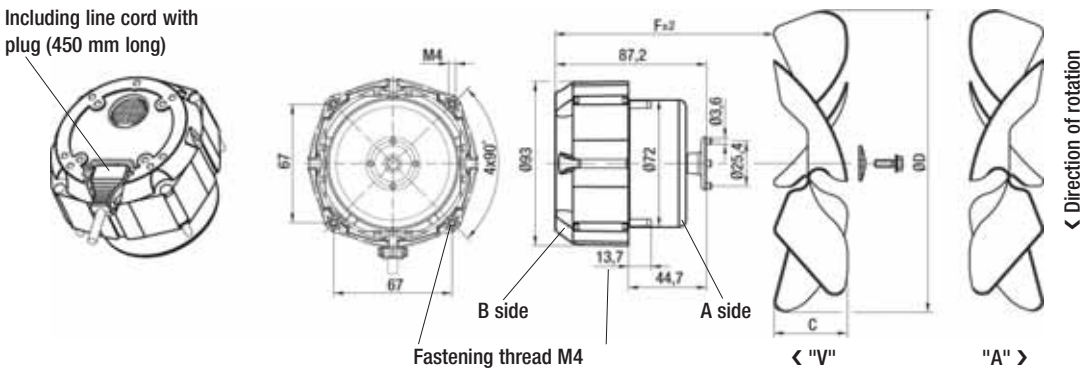

Connection lead p. 374 | Programming device p. 375 | Axial impeller p. 377 | (Basket) guard grille p. 378 | Wall ring p. 379 | Mounting angle p. 381

ebmpapst

- **Motor protection:** Via electronics
- **Electrical connection:** Line cord with plug
- **Protection class:** II
- **Product conforming to standard:** CE
- **Approvals:** VDE, UL
- **Curves:** Page 320

- **Speed settings:** The pre-programmed upper speed is reached with the speed relay open; lower speed is reached when the speed relay is closed.
  Speeds from 10% to 100% of the maximum speed can be preset using the programming unit (see page 375). However, we recommend not allowing it to fall below 1000 rpm (Ⓐ Ⓑ Ⓒ).
- **Mounting:** Guard grille and wall ring are mounted onto the protruding thread ends of the A side.
- **Axial impeller mounting:** Mounted to the motor shaft using a plastic adapter with pulling peg and an M4 screw.

Axial impellers		Blade angle 22° ± 1°30´				Blade angle 28° ± 1°30´				Blade angle 34° ± 1°30´			
Ø D	rpm	m³/h (2)	W (3)	F	C	m³/h (2)	W (3)	F	C	m³/h (2)	W (3)	F	C
154	2200	250	4.0	74.0	27.5	310	5.3	71.5	32.0	350	6.7	69.0	37.0
	1500	170	1.3			210	1.7			240	2.1		
172	2200	380	7.0	72.0	31.0	440	10.0	69.5	36.0	500	13.6	66.5	42.0
	1500	260	2.2			300	3.2			340	4.3		
200	2200	560	13.4	71.5	32.0	640	(4)19.5	69.0	37.5				
	1500	380	4.3			435	6.2						
154	1750	200	2.0	74.0	27.5	250	2.7	71.5	32.0	280	3.4	69.0	37.0
	1300	150	1.3			215	1.7			240	2.1		
172	1750	300	3.5	72.0	31.0	350	5.0	69.5	36.0	400	6.8	66.5	42.0
	1300	225	2.2			300	3.2			345	4.3		
200	1750	450	6.7	71.5	32.0	510	9.9	69.0	37.5	620	(4)16.8	65.0	45.0
	1300	335	4.2			440	6.2			530	10.6		
154	1550	180	1.4	74.0	27.5	220	1.9	71.5	32.0	240	2.3	69.0	37.0
	1100	130	0.5			155	0.7			170	0.8		
172	1550	270	2.5	72.0	31.0	310	3.5	69.5	36.0	350	4.8	66.5	42.0
	1100	190	0.9			220	1.3			250	1.7		
200	1550	400	4.7	71.5	32.0	450	6.9	69.0	37.5	550	(4)12.7	65.0	45.0
	1100	285	1.7			320	2.5			390	4.5		
230	1550	710	(4)15.4	70.0	35.0								
	1100	505	6.0										

(2) Running at free air flow (3) Power requirement of impeller (4) Permitted with corresponding cooling of the motor (shaft power > output power)

- **Electr. connection:**

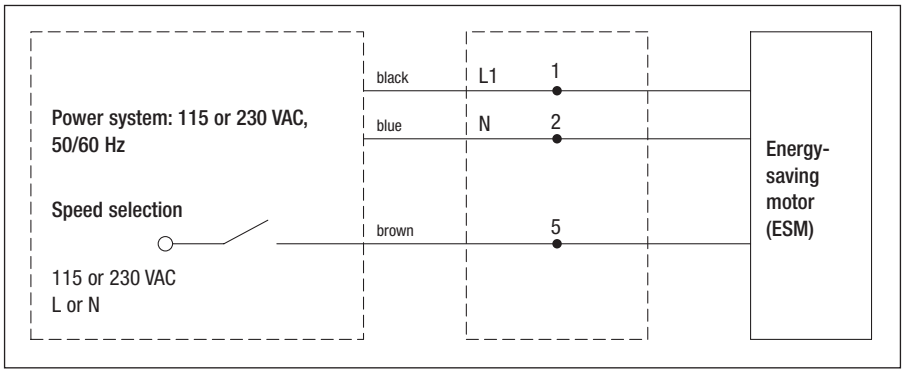

Energy-saving motors (ESM)

- **Material:** Housing made of die-cast aluminium
  Rotor: Coated in black
- **Direction of air flow:** "V" or "A" (depending on axial impeller used)
- **Direction of rotation:** Counter-clockwise, seen on shaft end
- **Type of protection:** IP 44
- **Insulation class:** "B"
- **Mounting position:** Any
- **Condensate discharges:** None
- **Mode of operation:** Continuous operation (S1)
- **Bearings:** Maintenance-free ball bearings

Nominal data	Curve	Nominal voltage	Frequency	Upper speed (1)	Lower speed (1)	Power input	Power output	Perm. amb. temp.	Mass
Type		VAC	Hz	rpm	rpm	W	W	°C	kg
M1G055-BD91 -45	D	1~ 115	50/60	1400	1000	9.0	5.9	-30 to +50	0.9
M1G055-BD87 -25	D	1~ 230							
M1G055-BD95 -26	E	1~ 115	50/60	1400	1000	27.0	12.0	-30 to +50	0.9
M1G055-BD91 -26	E	1~ 230							
M1G055-BD91 -17	F	1~ 115	50/60	1200	800	12.0	7.5	-30 to +50	0.9
M1G055-BD87 -17	F	1~ 230							
M1G055-BD95 -30	G	1~ 115	50/60	1200	800	15.4	6.3	-30 to +50	0.9
M1G055-BD91 -30	G	1~ 230							

subject to alterations (1) preprogrammed speeds

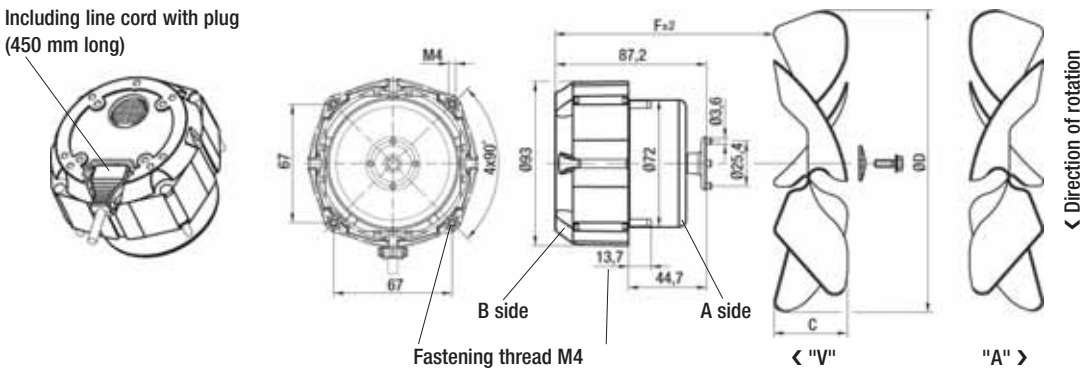

Connection lead p. 374 | Programming device p. 375 | Axial impeller p. 377 | (Basket) guard grille p. 378 | Wall ring p. 379 | Mounting angle p. 381

ebmpapst

- **Motor protection:** Via electronics
- **Electrical connection:** Line cord with plug
- **Protection class:** II
- **Product conforming to standard:** CE
- **Approvals:** VDE, UL
- **Curves:** Page 320

- **Speed settings:** The pre-programmed upper speed is reached with the speed relay open; lower speed is reached when the speed relay is closed.
  Speeds from 10% to 100% of the maximum speed can be preset using the programming unit (see page 375). However, we recommend not allowing it to fall below 600 rpm (Ⓓ Ⓕ) or 1000 rpm (Ⓔ Ⓖ).
- **Mounting:** Guard grille and wall ring are mounted onto the protruding thread ends of the A side.
- **Axial impeller mounting:** Mounted to the motor shaft using a plastic adapter with pulling peg and an M4 screw.

Axial impellers		Blade angle 22° ± 1°30´				Blade angle 28° ± 1°30´				Blade angle 34° ± 1°30´			
Ø D	rpm	m³/h (2)	W (3)	F	C	m³/h (2)	W (3)	F	C	m³/h (2)	W (3)	F	C
154	1400	160	1.0	74.0	27.5	200	1.3	71.5	32.0	220	1.7	69.0	37.0
	1000	115	0.4			145	0.5			160	0.6		
172	1400	240	1.8	72.0	31.0	280	2.5	69.5	36.0	320	3.5	66.5	42.0
	1000	170	0.6			200	1.0			230	1.3		
200	1400	360	3.4	71.5	32.0	410	5.0	69.0	37.5				
	1000	260	1.3			295	1.8						
200	1400									500	8.6	65.0	45.0
	1000									360	3.1		
230	1400	640	11.0	70.0	35.0	700	(4)12.5	66.0	43.0	860	(4)14.7	62.5	50.0
	1000	460	4.0			500	4.6			615	5.3		
154	1200	140	0.6	74.0	27.5	170	0.8	71.5	32.0	190	1.1	69.0	37.0
	800	95	0.2			110	0.2			130	0.3		
172	1200	210	1.1	72.0	31.0	240	1.6	69.5	36.0	270	2.2	66.5	42.0
	800	140	0.3			160	0.5			180	0.7		
200	1200	310	2.1	71.5	32.0	350	3.2	69.0	37.5	420	5.4	65.0	45.0
	800	210	0.6			235	1.0			290	1.6		
230	1200	550	(4) 6.9	70.0	35.0	600	(4) 7.9	66.0	43.0	740	(4) 9.3	62.5	50.0
	800	365	2.0			400	2.3			495	2.7		
254	1200	610	(4)10.3	69.0	37.0								
	800	405	3.0										

(2) Running at free air flow (3) Power requirement of impeller (4) Permitted with corresponding cooling of the motor (shaft power > output power)

- **Electr. connection:**

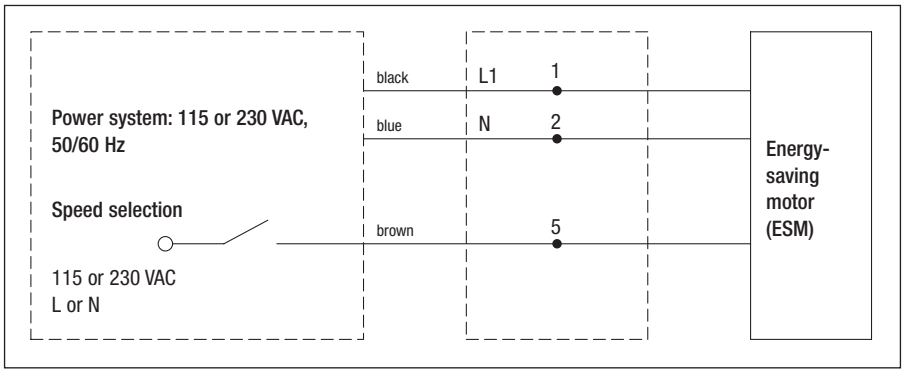

Energy-saving motors (ESM)

Air performance curves

Ø 154, 2200 rpm / 1500 rpm

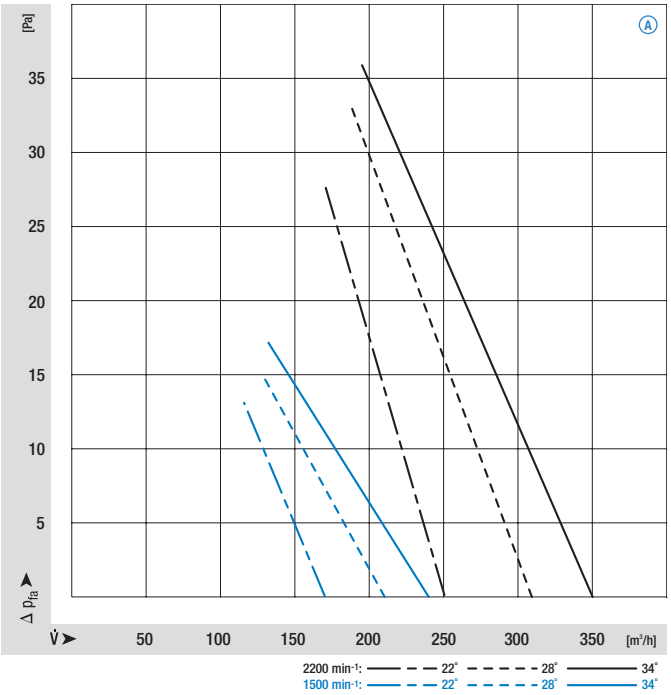

Ø 172, 2200 rpm / 1500 rpm

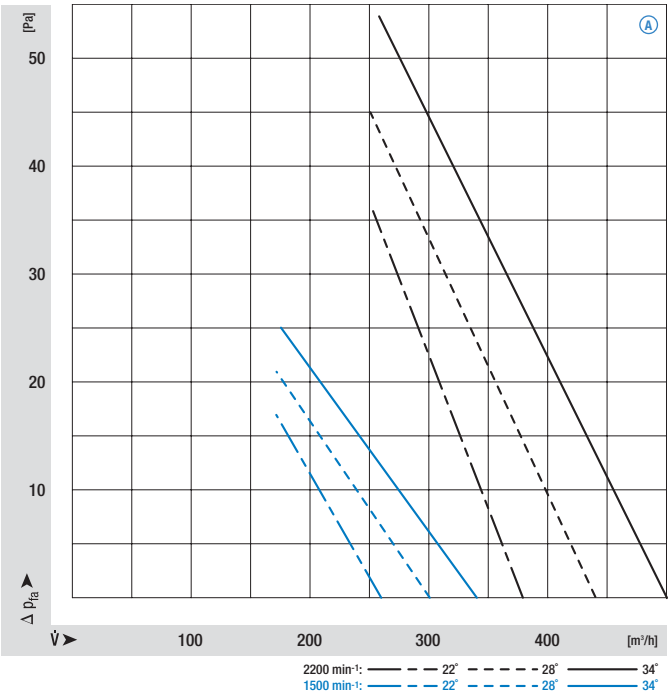

Ø 200, 2200 rpm / 1500 rpm

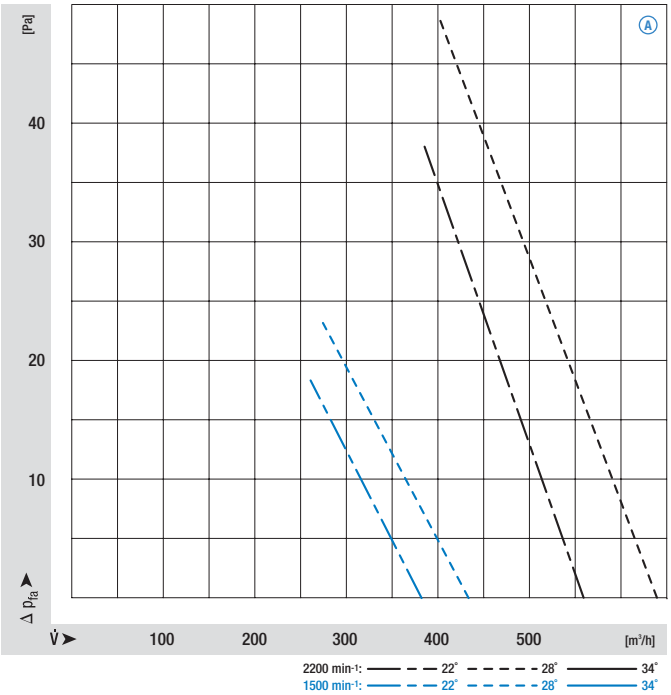

ebmpapst

Ø 154, 1750 rpm / 1300 rpm

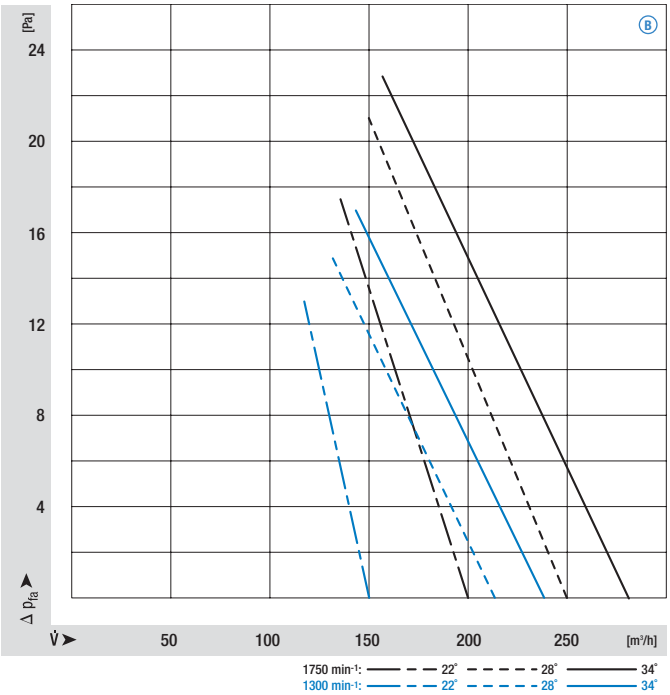

Ø 172, 1750 rpm / 1300 rpm

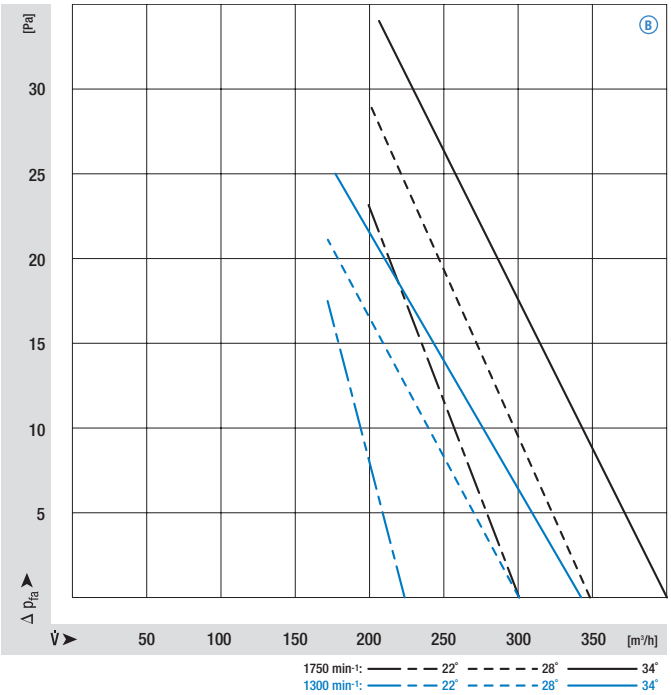

Ø 200, 1750 rpm / 1300 rpm

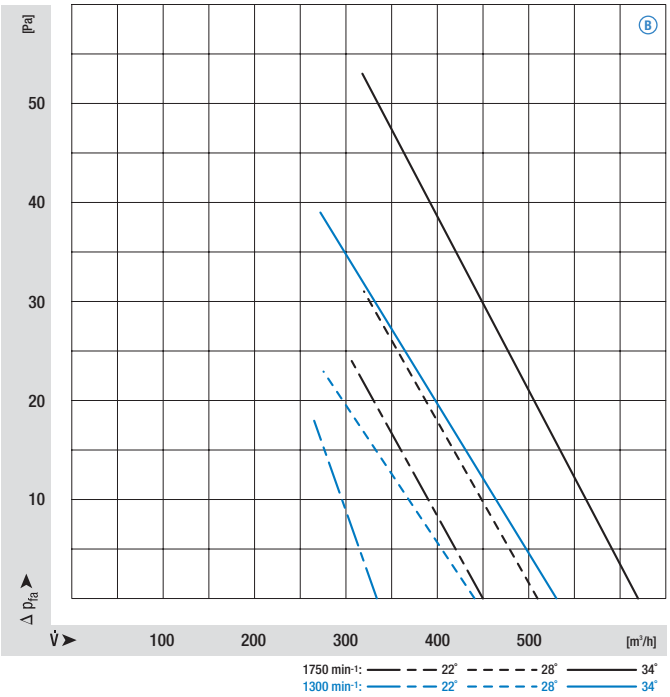

Energy-saving motors (ESM)

Air performance curves

Ø 154, 1550 rpm / 1100 rpm

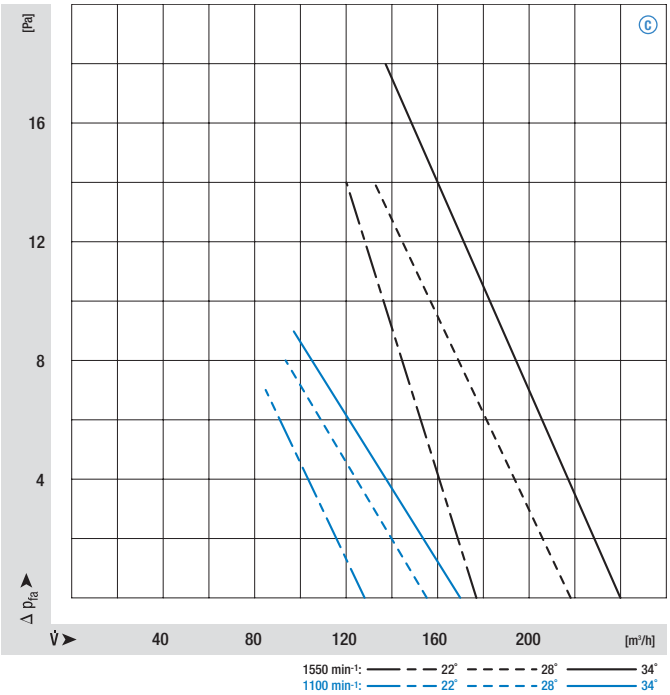

Ø 172, 1550 rpm / 1100 rpm

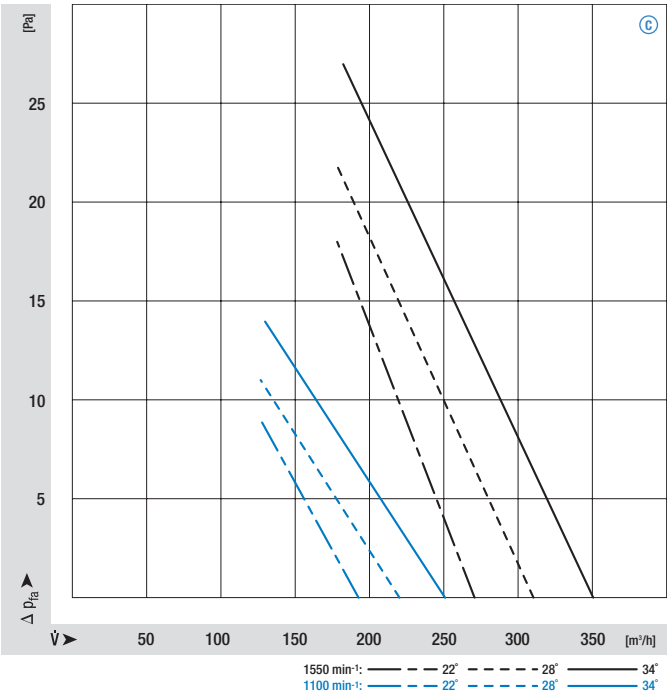

Ø 200, 1550 rpm / 1100 rpm

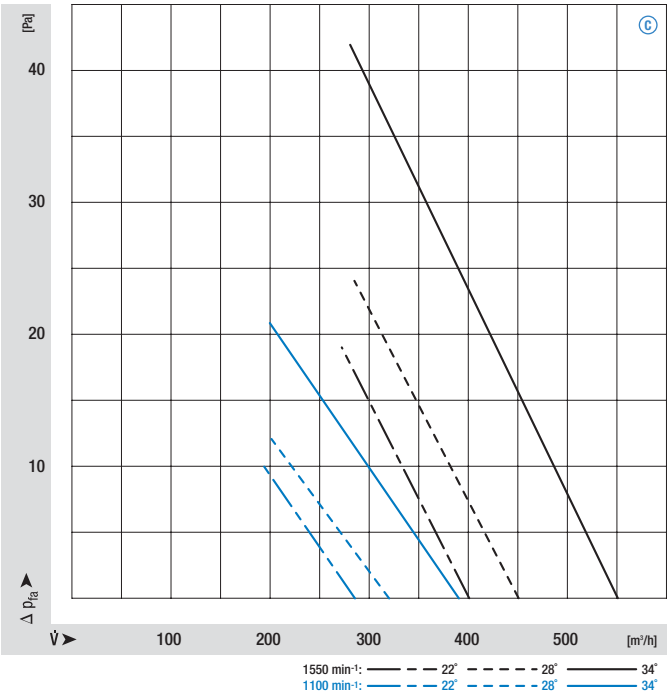

Ø 230, 1550 rpm / 1100 rpm

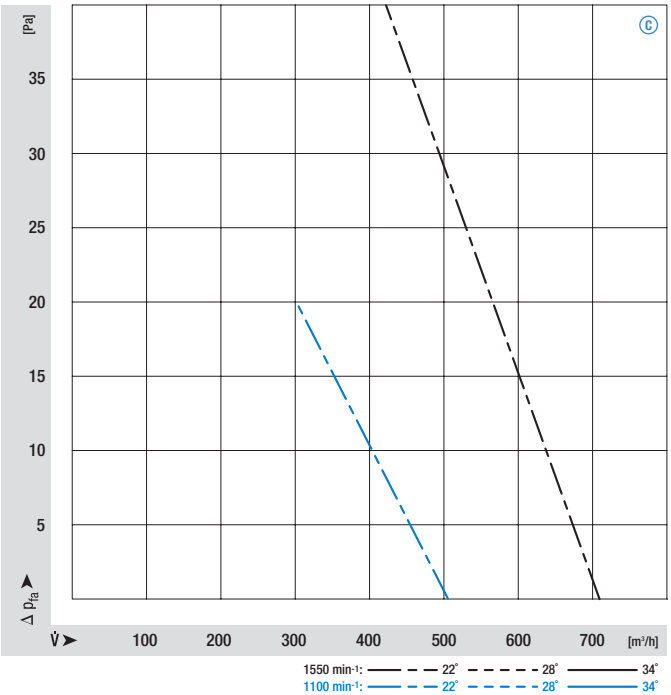

ebmpapst

Ø 154, 1400 rpm / 1000 rpm

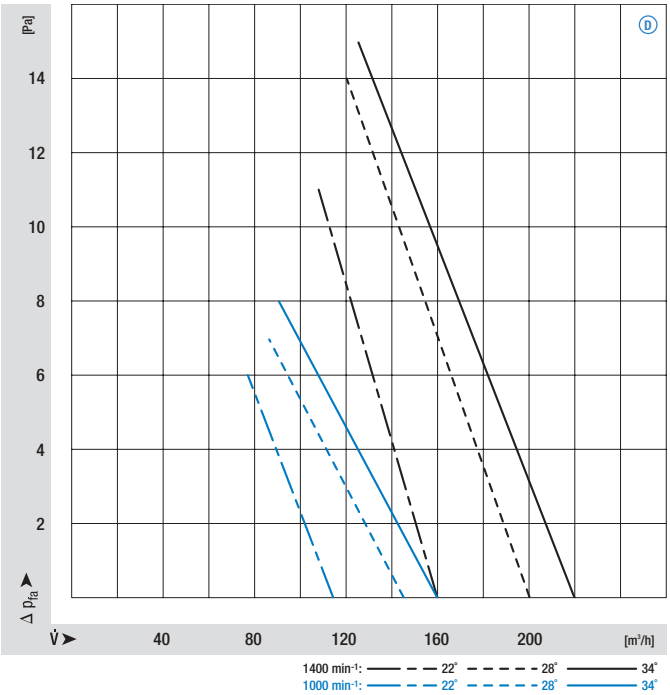

Ø 172, 1400 rpm / 1000 rpm

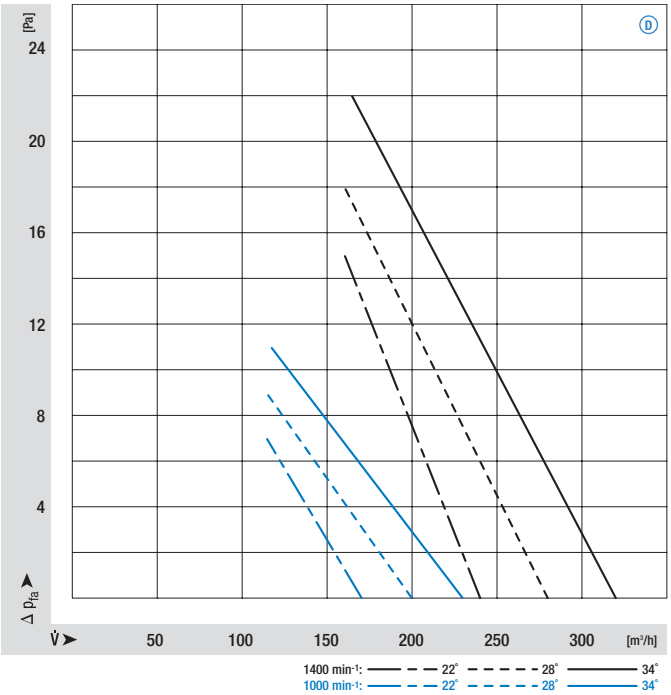

Ø 200, 1400 rpm / 1000 rpm

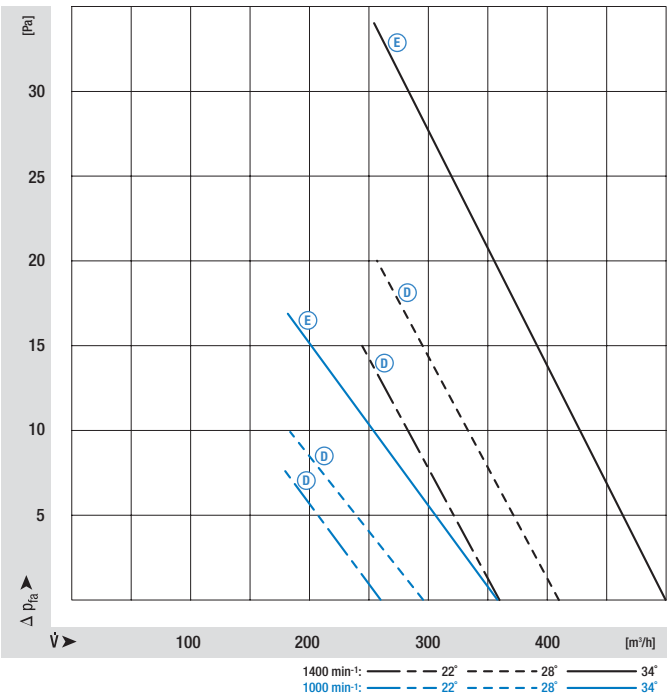

Ø 230, 1400 rpm / 1000 rpm

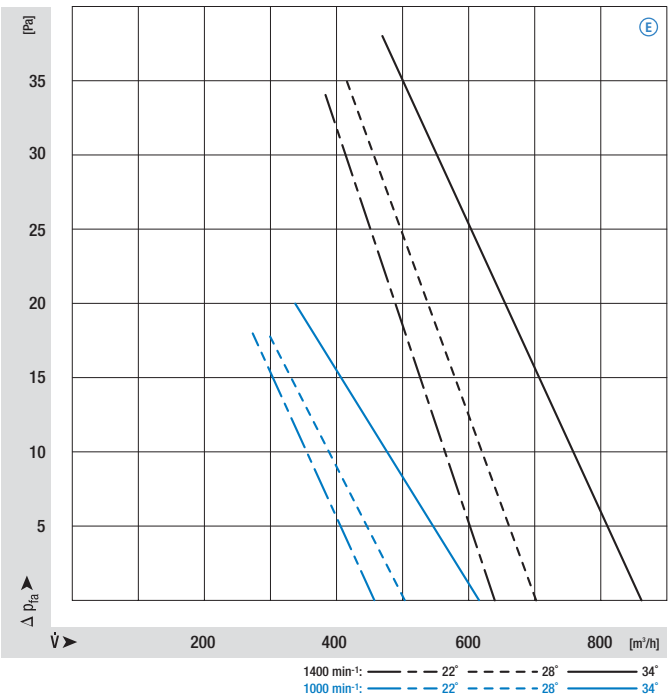

Energy-saving motors (ESM)

Air performance curves

Ø 154, 1200 rpm / 800 rpm

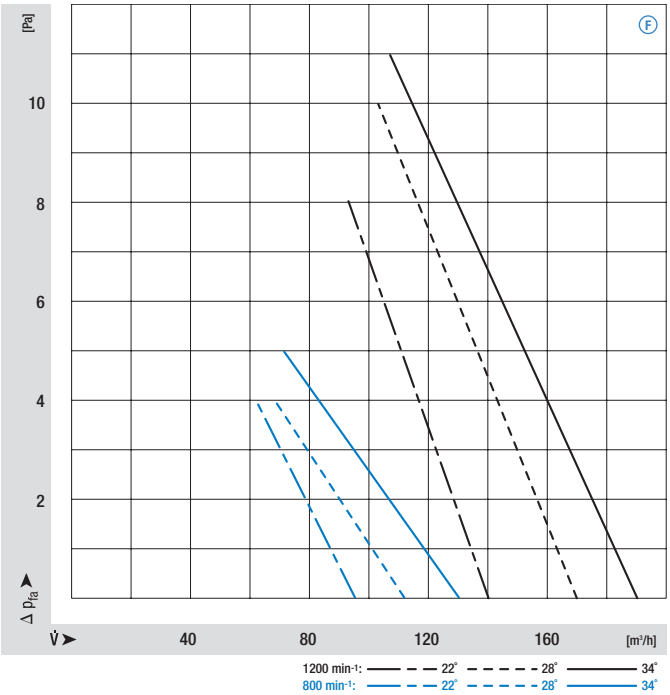

Ø 172, 1200 rpm / 800 rpm

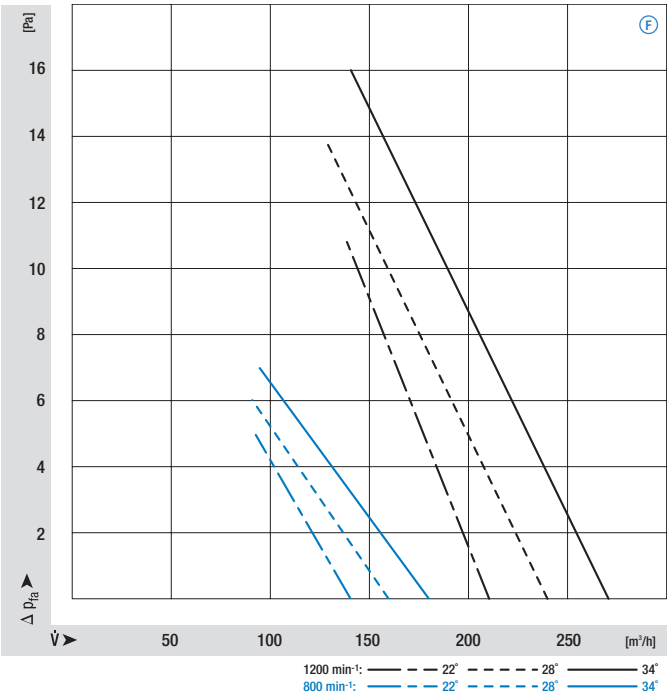

Ø 200, 1200 rpm / 800 rpm

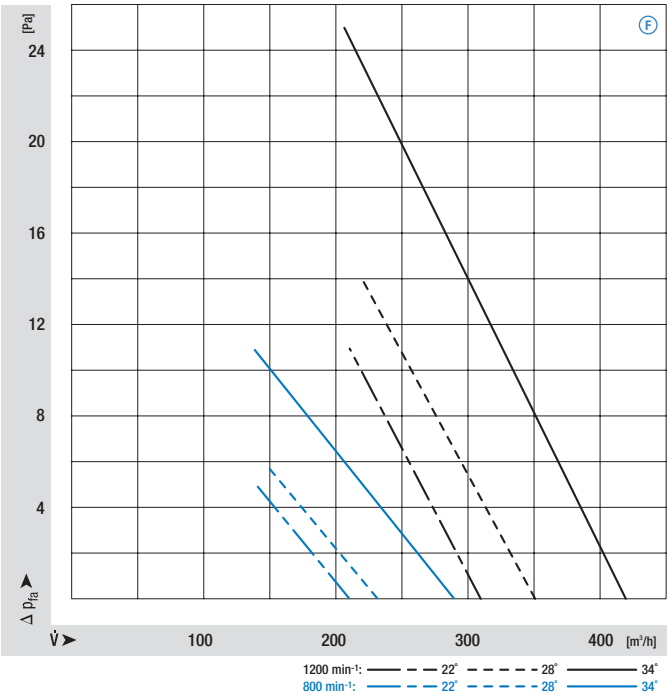

Ø 230, 1200 rpm / 800 rpm

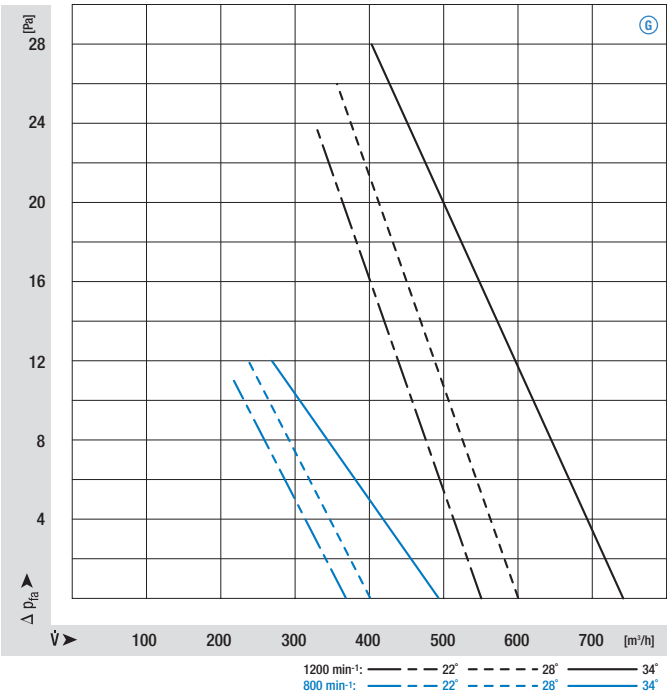

ebmpapst

Ø 254, 1200 rpm / 800 rpm

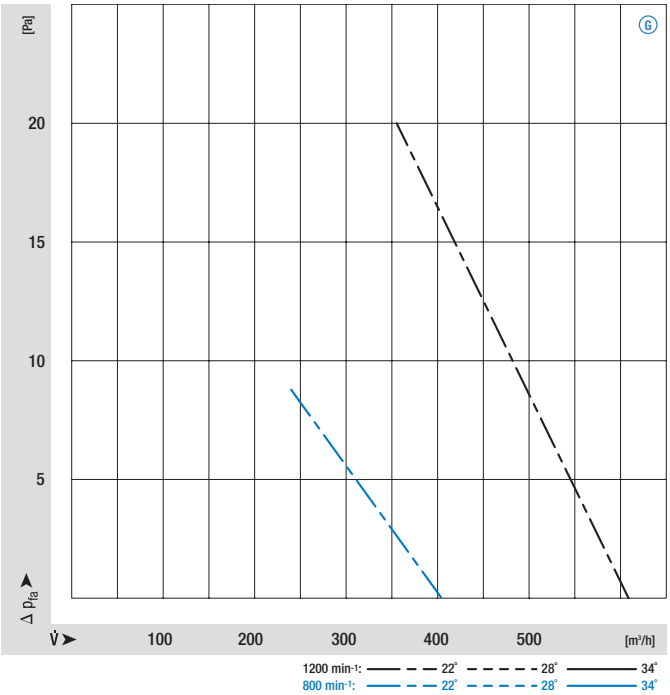

Energy-saving axial fans

- **Material:** Wall ring: Plastic PP20TV
  Blade: Sheet steel, coated in black
  Rotor: Coated in black
- **Number of blades:** 5
- **Direction of air flow:** "V", exhaust over struts
- **Direction of rotation:** Counter-clockwise, seen on rotor
- **Type of protection:** IP 44
- **Insulation class:** "B"
- **Mounting position:** Any
- **Condensate discharges:** None
- **Mode of operation:** Continuous operation (S1)
- **Bearings:** Maintenance-free ball bearings
- **Motor protection:** Via electronics
- **Electrical connection:** Line cord with plug
- **Protection class:** II
- **Product conforming to standard:** CE
- **Approvals:** VDE, UL, CSA
- **Speed:** Using the programming unit (see page 375), 2 speeds between n_{min} and n_{max} can be programmed.

Nominal data		Curve	Nominal voltage	Frequency	Air flow	Speed/rpm	Power input	Current draw	Sound pressure level	Max. operative range	Perm. amb. temp.	Mass
Type	**Motor**		**VAC**	**Hz**	**m³/h**	**rpm**	**W**	**A**	**dB(A)**	**Pa**	**°C**	**kg**
W1G200-EA91 -27	M1G 055-BD	A	115	50/60	500	1400	7	0.12	42	—	-30 to +50	1.0
W1G200-EA95 -47	M1G 055-BD	B	115	50/60	800	2200	27	0.42	56	—	-30 to +50	1.0
W1G200-EA87 -25	M1G 055-BD	A	230	50/60	500	1400	7	0.06	42	—	-30 to +50	1.0
W1G200-EA91 -45	M1G 055-BD	B	230	50/60	800	2200	27	0.21	56	—	-30 to +50	1.0

subject to alterations

Curves (programmable)

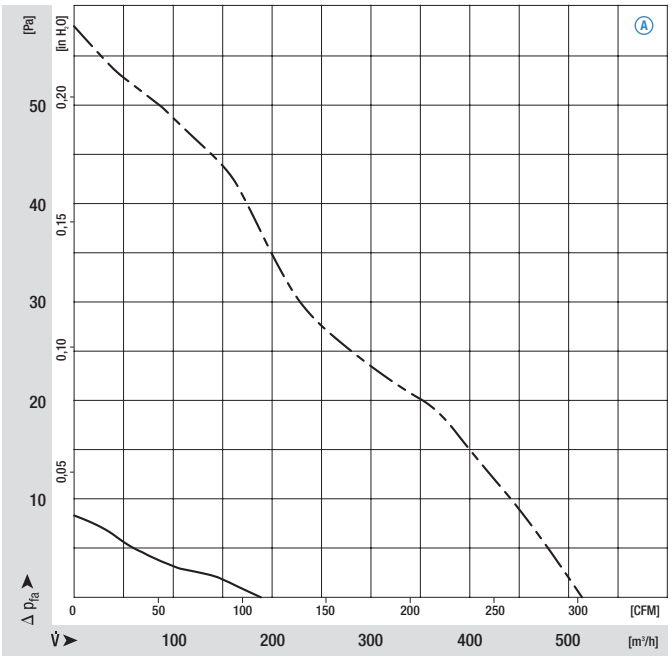

— – — $n_{max.}$ = 1400 min⁻¹ ——— $n_{min.}$ = 500 min⁻¹

Curves (programmable)

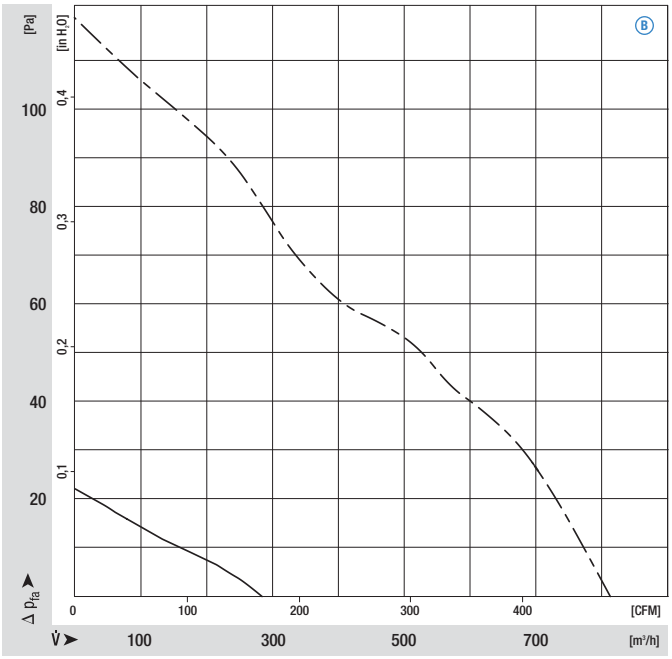

— – — $n_{max.}$ = 2200 min⁻¹ ——— $n_{min.}$ = 800 min⁻¹

ebmpapst

– **Electr. connection:**

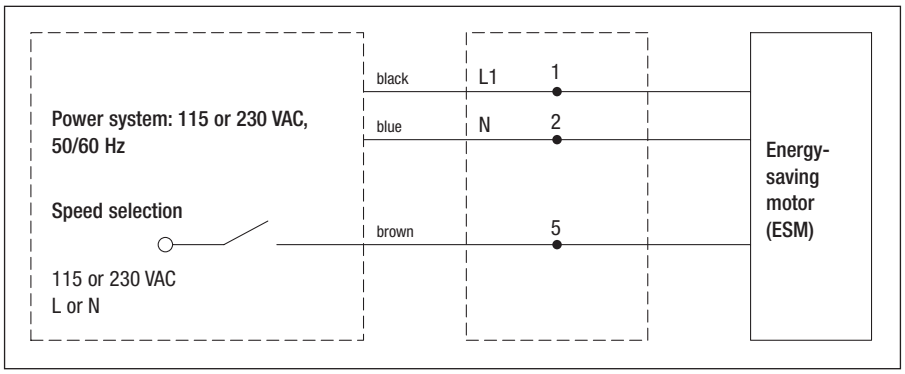

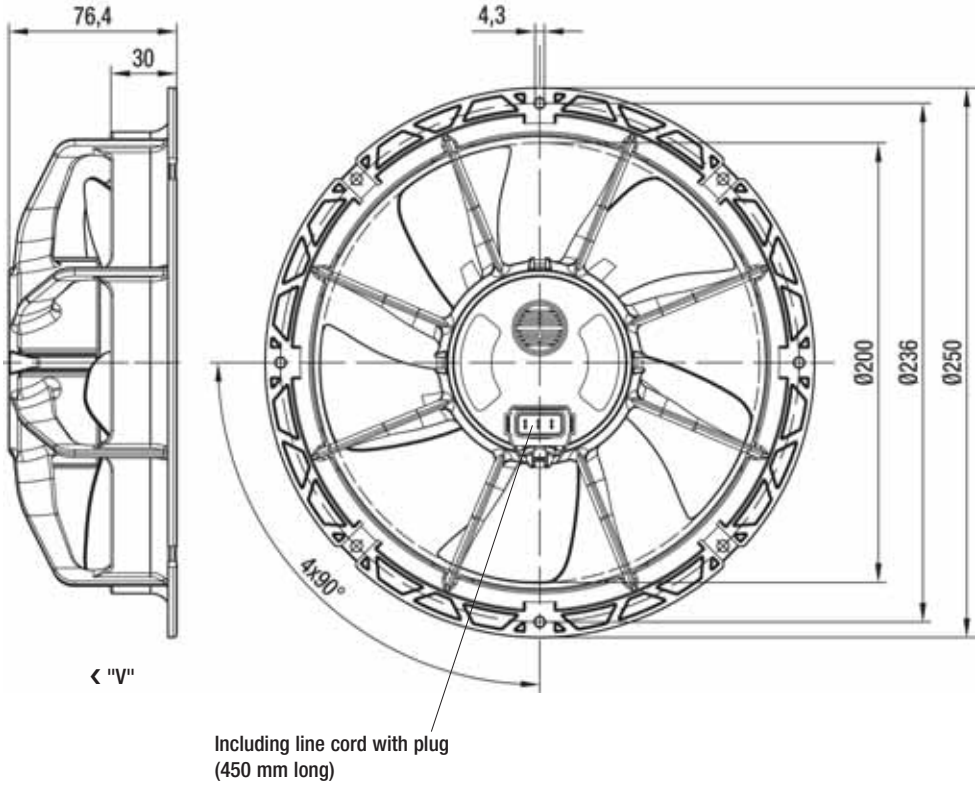

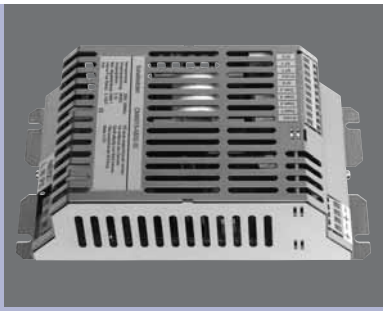

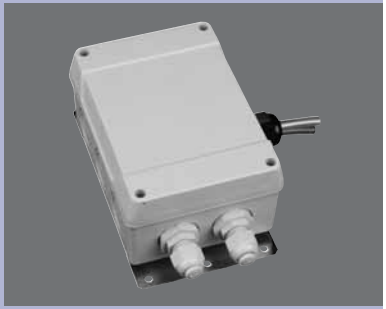

EC-SYSTEMS

Options	330
Switch power supplies	334
External commutation electronics for rail technology	338
Accessories: Temperature sensor / control module, pressure control, selection module, interface converter, ...	340
HMS controller	358

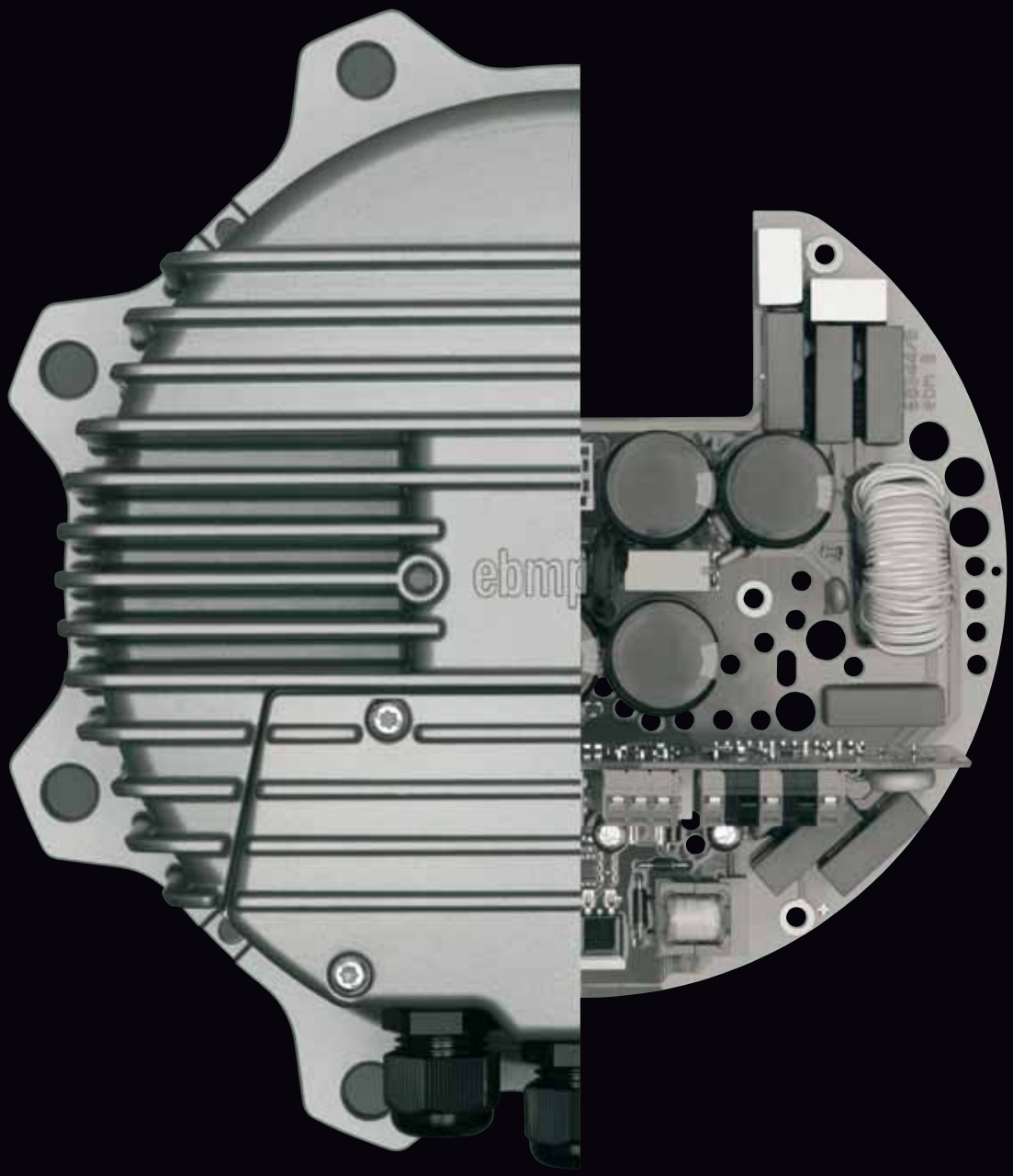

EC-SYSTEMS

Options

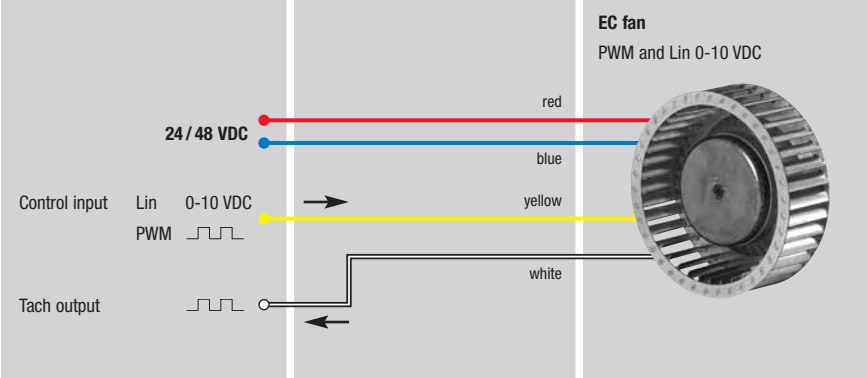

EC fans 24 / 48 VDC
with integrated commutation electronics

Linear input:
< 1 VDC -> n=0
1 VDC -> n_{min}
10 VDC -> n_{max}

PWM input:
< 10% PWM -> n=0
10% PWM -> n_{min}
100% PWM -> n_{max}

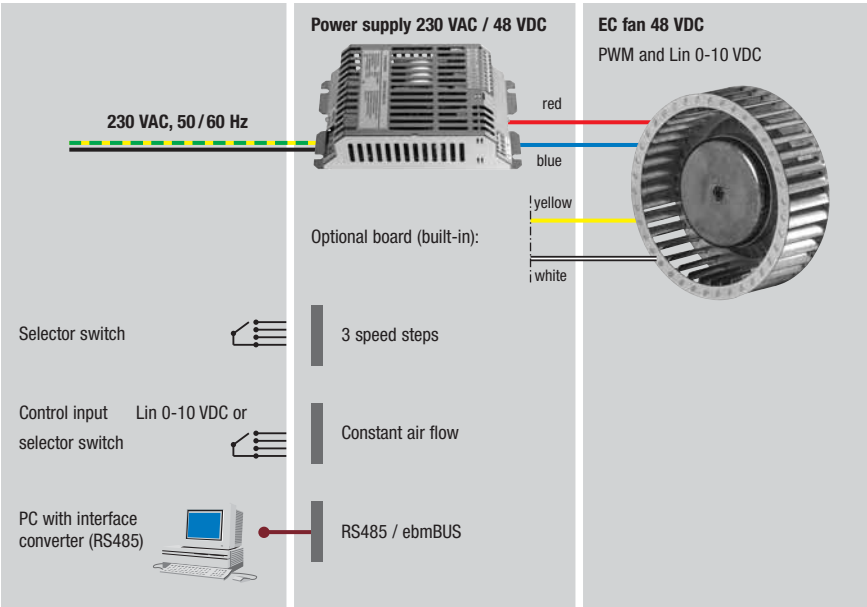

EC fans 48 VDC
with integrated commutation electronics

Linear input:
< 1 VDC -> n=0
1 VDC -> n_{min}
10 VDC -> n_{max}

PWM input:
< 10% PWM -> n=0
10% PWM -> n_{min}
100% PWM -> n_{max}

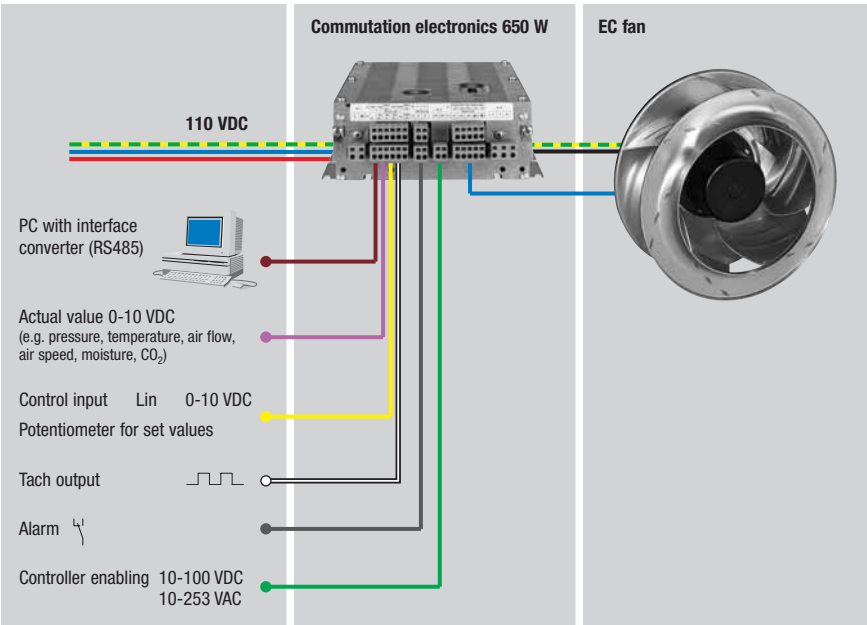

EC fans
with external commutation electronics
650 W, 110 VDC (rail technology)

ebmpapst

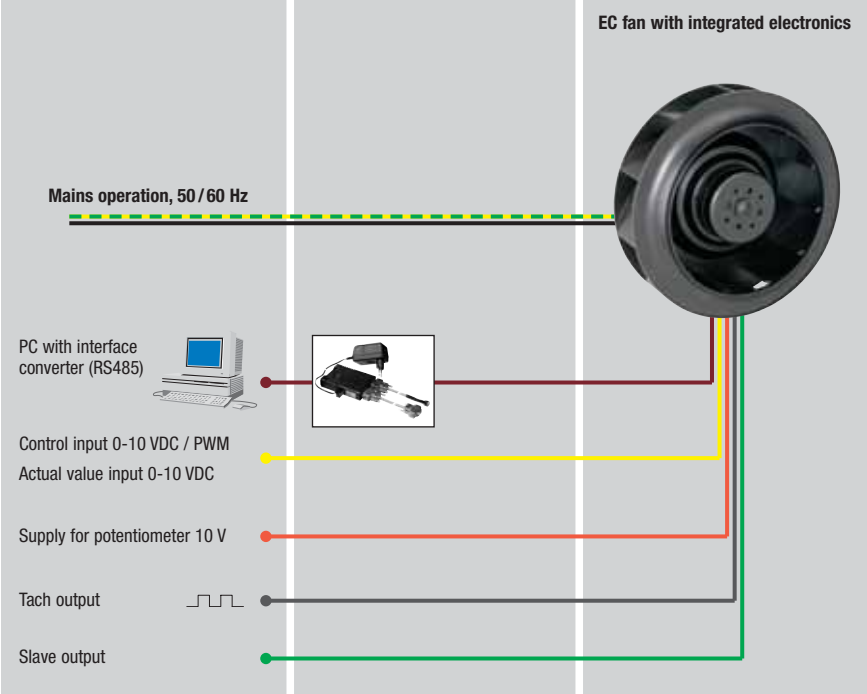

EC fans (motor size 055)
with integrated commutation electronics
1~ 115 VAC or 230 VAC
50/60 Hz mains operation

EC fans (motor size 074)
with integrated commutation electronics
1~ 100 -130 VAC or 200 -277 VAC
50/60 Hz mains operation

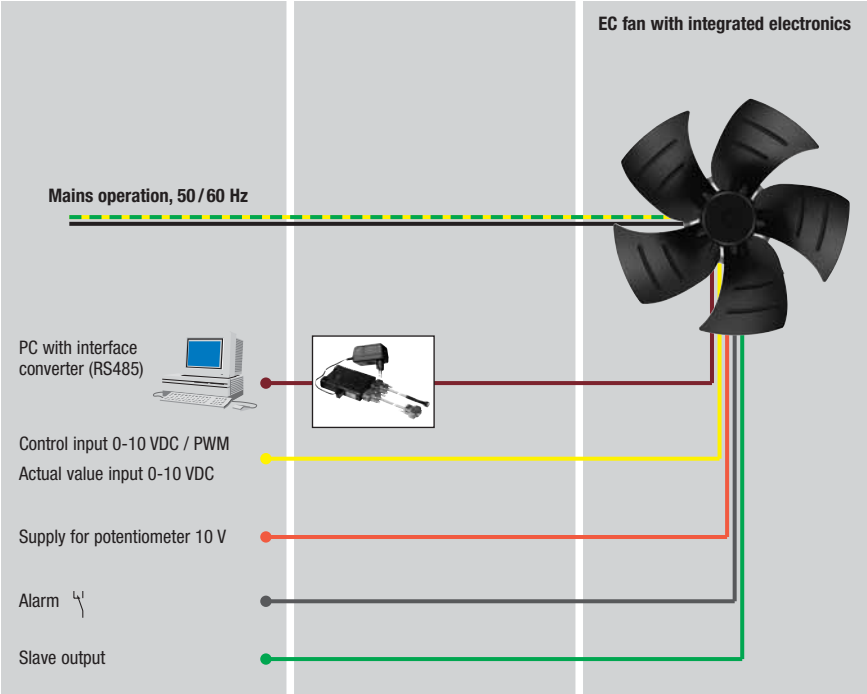

EC fans (motor size 084)
with integrated commutation electronics
1~ 100 -130 VAC or 200 -277 VAC
50/60 Hz mains operation

EC-SYSTEMS

Options

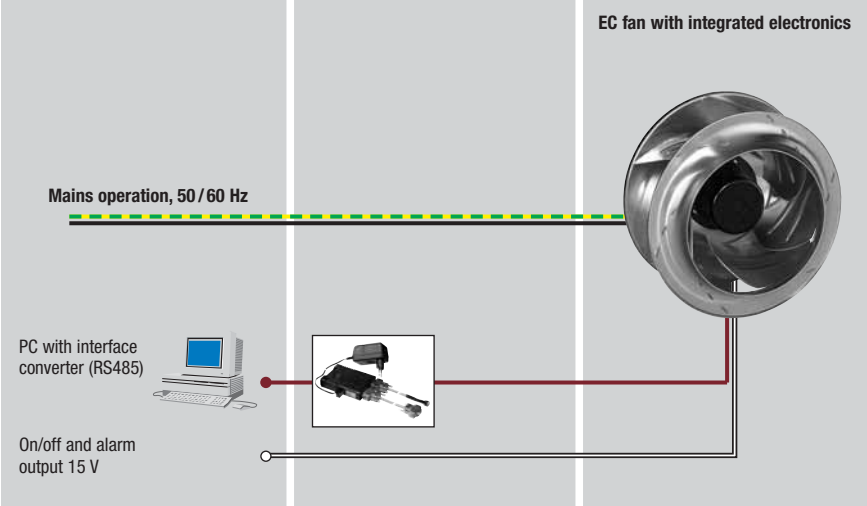

EC fans (motor size 084, ebmBUS)
with integrated commutation electronics
1~ 200-277 VAC,
50/60 Hz mains operation

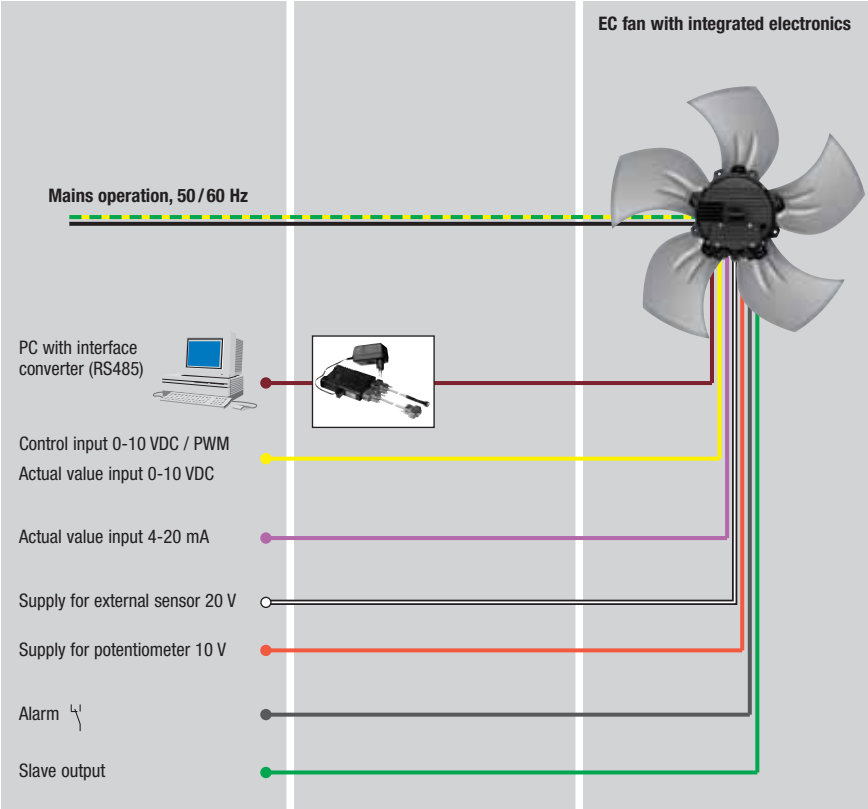

EC fans (motor size 112 / 150)
with integrated commutation electronics
1~ 200-277 VAC or
3~ 200-240 / 380-480 VAC
50/60 Hz mains operation

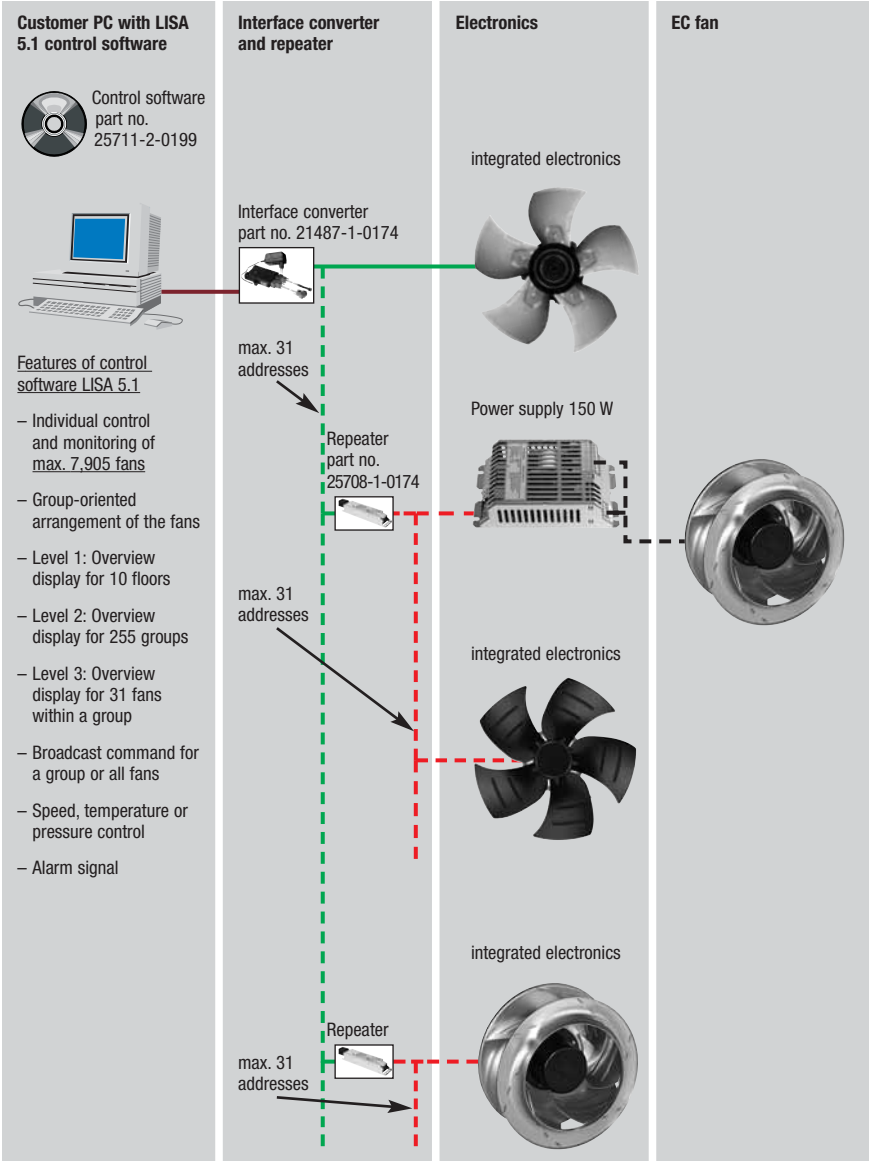

EC-SYSTEMS:
Networked EC fans with interface converter and repeater

Switch power supply with PFC, basic version

48 VDC, 150 W / 300 W

- **General remarks:** Switch power supply with an output power of 150 W / 300 W to supply 48 VDC EC motors from the 115 / 230 VAC mains. It is also possible to run several motors up to an overall power of 150 W / 300 W. Data on the 60 W switching power supply is available on request.
- **Function:** Supply of an electrically insulated direct voltage of 48 VDC at the output when connected to the 115 / 230 V mains. The power supply is sustainably short-circuit proof, open-circuit proof and protected against overheating. An integrated EMC filter guarantees RFI suppression of the unit according to EN 61000-3-2.
- **Material:** Housing made of stainless steel
- **Protection class:** I
- **Type of protection:** IP 20 (acc. to EN 60529)

Nominal data	Nominal voltage	Frequency	Output voltage	Output P_1 max.	Rated output current	Mass	Dimensions					
Type	**VAC**	**Hz**	**VDC**	**W**	**A**	**kg**	**a**	**b**	**c**	**d**	**e**	**f**
CNW015-AB06 -01	1~ 115	50/60	48	150	3.10	0.7	187	176	167	50	110	1
CNW015-AB02 -01	1~ 230	50/60	48	150	3.10	0.7	187	176	167	50	110	1
CNW030-AC06 -01	1~ 100-120	50/60	48	300	6.25	1.3	272	260	251	66	112	2
CNW030-AC02 -01	1~ 200-277	50/60	48	300	6.25	1.3	272	260	251	66	112	2

subject to alterations

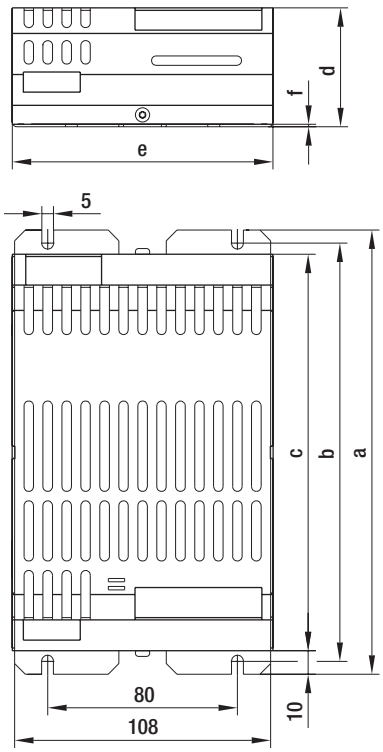

- **EMC:** Interference emission acc. to EN 61000-6-3
  Interference immunity acc. to EN 61000-6-1
- **Product conforming to standards:** EN 50178, CE
- **Approvals:** UL/CSA (File No. E 181381)

ebmpapst

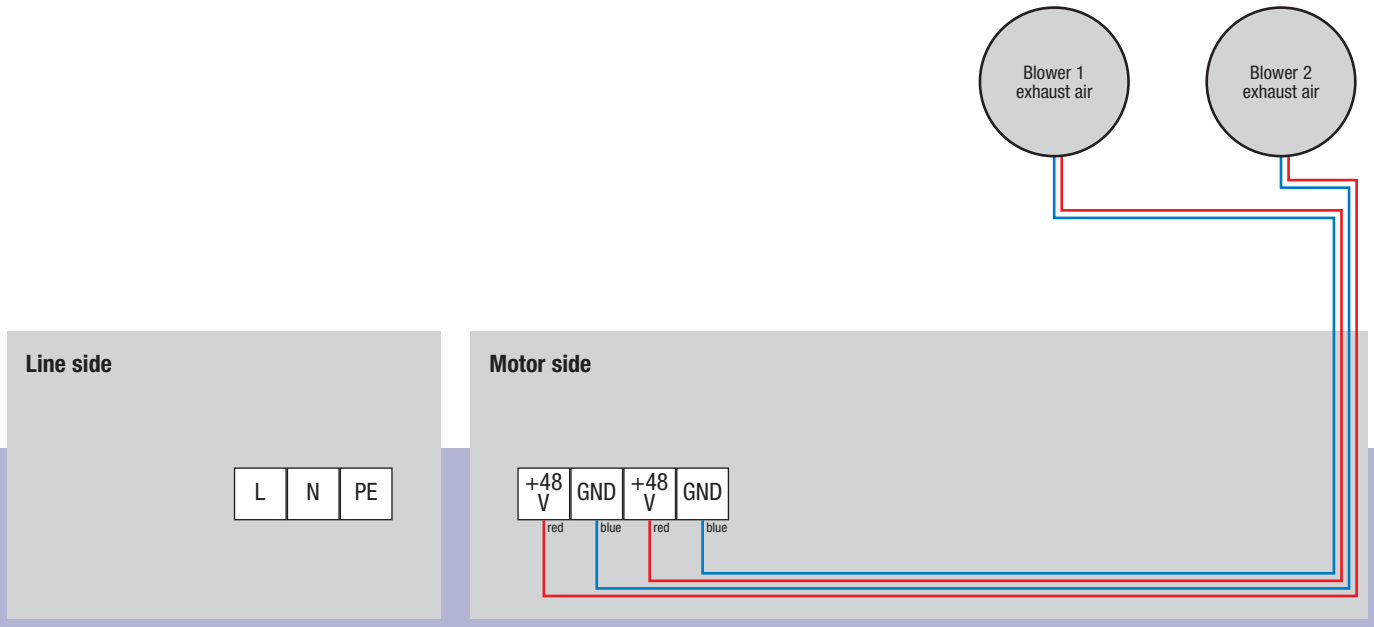
Blower 1
exhaust air
Blower 2
exhaust air
Line side
L
N
PE
Motor side
+48 V
GND
+48 V
GND
red
blue
red
blue

Switch power supply with PFC, RS485 and ebmBUS

48 VDC, 150 W / 300 W

- **General remarks:** Switch power supply with an output power of 150 W / 300 W to supply 48 VDC EC motors from the 115 / 230 VAC mains. It is also possible to run several motors up to an overall power of 150 W / 300 W. Data on the 60 W switching power supply is available on request.
- **Function:** Supply of an electrically insulated direct voltage of 48 VDC at the output when connected to the 115 / 230 V mains. The power supply is sustainably short-circuit proof, open-circuit proof and protected against overheating. An integrated EMC filter guarantees RFI suppression of the unit according to EN 61000-3-2.
- **Material:** Housing made of stainless steel
- **Protection class:** I
- **Type of protection:** IP 20 (acc. to EN 60529)

Nominal data	Nominal voltage	Frequency	Output voltage	Output P_1 max.	Rated output current	Mass	Dimensions					
Type	**VAC**	**Hz**	**VDC**	**W**	**A**	**kg**	**a**	**b**	**c**	**d**	**e**	**f**
CNW015-AB06 -05	1~ 115	50/60	48	150	3.10	0.7	187	176	167	50	110	1
CNW015-AB02 -05	1~ 230	50/60	48	150	3.10	0.7	187	176	167	50	110	1
CNW030-AC06 -05	1~ 100-120	50/60	48	300	6.25	1.3	272	260	251	66	112	2
CNW030-AC02 -05	1~ 200-277	50/60	48	300	6.25	1.3	272	260	251	66	112	2

subject to alterations

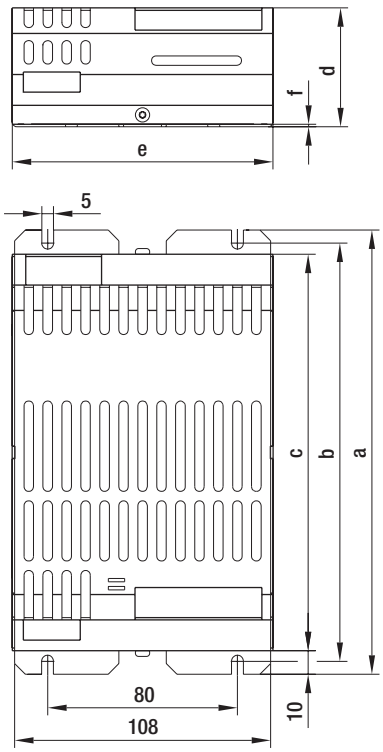

- **EMC:** Interference emission acc. to EN 61000-6-3
  Interference immunity acc. to EN 61000-6-1
- **Product conforming to standards:** EN 50178, CE
- **Approvals:** UL/CSA (File No. E 181381)
- **Technical features:** Control board for RS485, ebmBUS and LISA functions

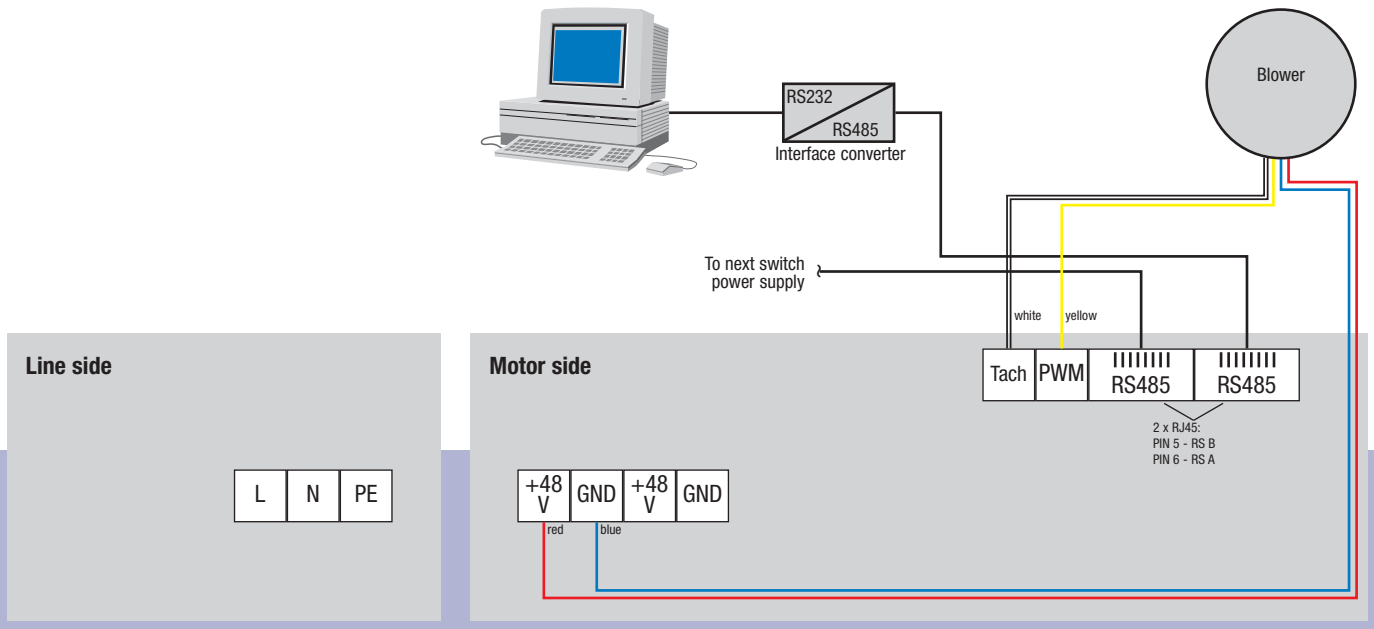
RS232
RS485
Interface converter
Blower
To next switch
power supply
white
yellow
Line side
L
N
PE
Motor side
Tach
PWM
RS485
RS485
2 x RJ45:
PIN 5 - RS B
PIN 6 - RS A
+48 V
GND
+48 V
GND
red
blue

External commutation electronics

for rail technology, 110 VDC, 650 W

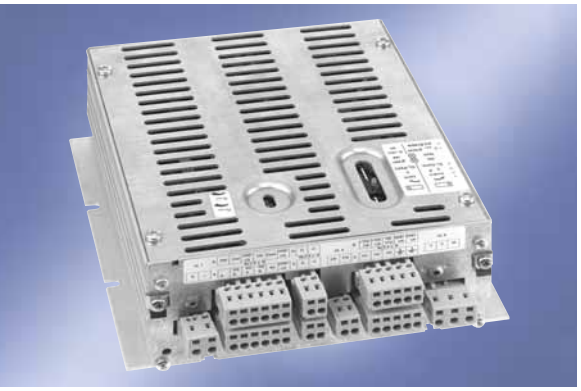

- **General remarks:** For EC motors and fans with 3 cores and without integrated commutation electronics
- **Function:** Commutation unit for three-core EC motors up to a power input of 650 W. Various basic functions are integrated: open loop speed control, closed loop speed control, RS485 interface. In combination with sensors, all control tasks as required in air technology can be executed.
- **Protection class:** I
- **Type of protection:** IP 20 (acc. to DIN EN 60529)
- **NB:** Connected fans have to be designed for a rated voltage of 127 VDC!

Nominal data	Nominal voltage	Power input P_1 max.	Current draw	Perm. amb. temp.	Mass
Type	**VDC**	**W**	**A**	**°C**	**kg**
CEG 485-HB50 -01	110	650	5.9	-25 to +40	2.0

subject to alterations

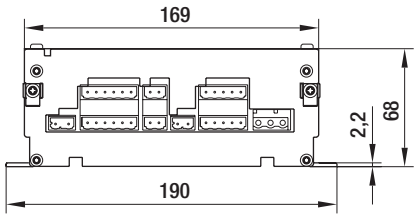

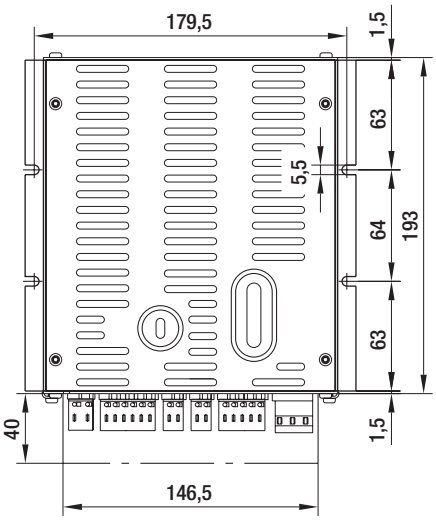

- **EMC / EMI:** Acc. to EN 50155 and EN 50121
- **Legislation:** Low voltage directive 73/23/EEC, VDE 0160/EN 50178
- **Design:**
  - Motor output protected against short circuit phase to phase and conditionally phase to earth
  - 0-10 V input (Ri: 100 kΩ)
  - 0-10 V input (Ri: 100 kΩ) for connection of external actual value input
  - RS485 interface (ebmBUS)
  - Floating alarm contact 250 VAC / 5A, during alarm, relay is released (low-active)
  - Wide voltage input for external controller enabling via RESET function
  - Tach output
  - LED for operation and alarm mode
    green: unit on
    red: alarm
  - Setting of minimum and maximum values via potentiometer
  - Operational modes (to be set via DIP switch):
    Open loop speed control
    Closed loop speed control
    Controlling external parameters
  - Direction of motor rotation reversible
- **Connectors for external electronics:**
  KL1 2-pole connector; centreline 7.5; Co. Wago part no.: 231-202/026-000
  KL2A 6-pole connector; centreline 5; Co. Wago part no.: 231-106/026-000
  KL2B 6-pole connector; centreline 5; Co. Wago part no.: 231-106/026-000
  KL3A 2-pole connector; centreline 5; Co. Wago part no.: 231-102/026-000
  KL3B 2-pole connector; centreline 5; Co. Wago part no.: 231-102/026-000
  KL4 2-pole connector; centreline 5; Co. Wago part no.: 231-102/026-000
  KL5A 5-pole connector; centreline 5; Co. Wago part no.: 231-105/026-000
  KL5B 5-pole connector; centreline 5; Co. Wago part no.: 231-105/026-000
  KL6 3-pole connector; centreline 7.5; Co. Wago part no.: 731-603

ebmpapst

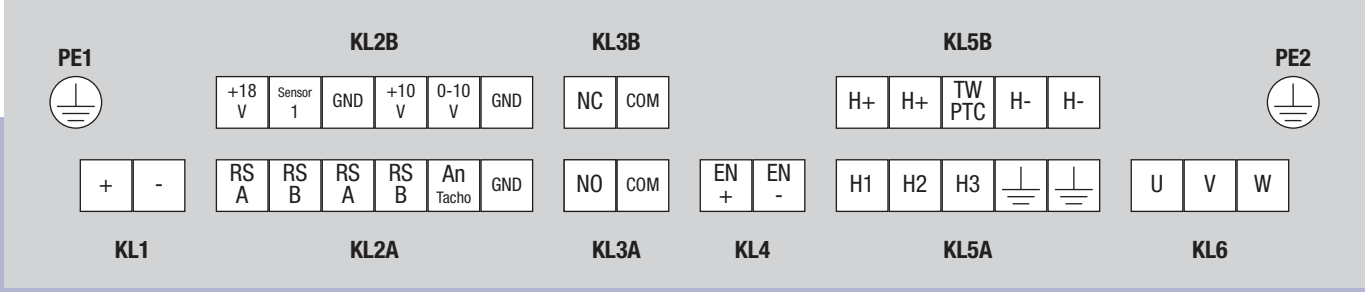

Connector	Connection	Assignment / function
PE1		Ground connection
PE2		Ground connection
KL1	+	110 VDC
	-	110 VDC
KL2A	RS A	Interface connection RS A
	RS B	Interface connection RS B
	RS A	Interface connection RS A
	RS B	Interface connection RS B
	An, Tacho	Tach output, open collector
	GND	Reference KL2 (for KL2 only)
KL2B	+18 V	+18 V (non-stabilised, +20%, 20 mA) for supplying
		external sensors
	Sensor 1	Input for external sensor, Ri = 100 kΩ
	GND	Reference KL2 (for KL2 only)
	+10 V	+10 V (stabilised +/- 3 %, 25 mA)
	0-10 V	Input for set value 0 - 10 V, Ri = 100 kΩ
	GND	Reference KL2 (for KL2 only)

Connector	Connection	Assignment / function
KL3A	NO	Relay contact for alarm, make for failure
	COM	Relay contact for alarm
KL3B	NC	Relay contact for alarm, break for failure
	COM	Relay contact for alarm
KL4	EN +	Enable input via RESET function
	EN -	Enable input via RESET function
KL5A	H1	Hall-sensor 1
	H2	Hall-sensor 2
	H3	Hall-sensor 3
	⏚	Shielding connection
	⏚	Shielding connection
KL5B	H+	Power supply for hall-sensors (+)
	H+	Power supply for hall-sensors (+)
	TW / PTC	Thermal switch or PTC connection
	H-	Power supply for hall-sensors (-)
	H-	Power supply for hall-sensors (-)
KL6	U	Motor winding U
	V	Motor winding V
	W	Motor winding W

Temperature sensor

Nominal data	Nominal voltage	Current draw	Output voltage	Output current	Output impedance	Temperature measuring range	Mass
Part no.	**VDC**	**mA**	**VDC**	**mA**	**kΩ**	**°C**	**kg**
50005-1-0174	15-30	10	0-10	1.0	1.1	-20 to +80	0.02

subject to alterations

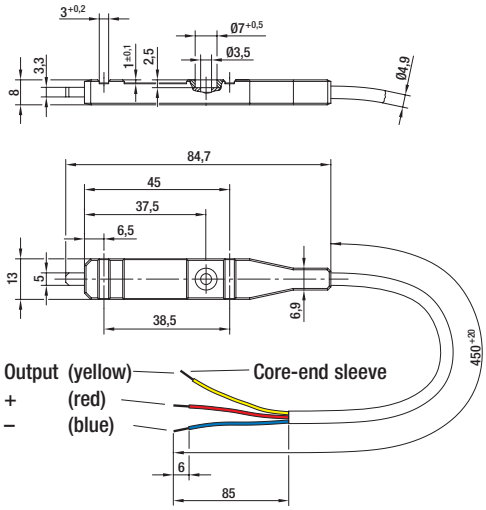

– **Electr. connection:**

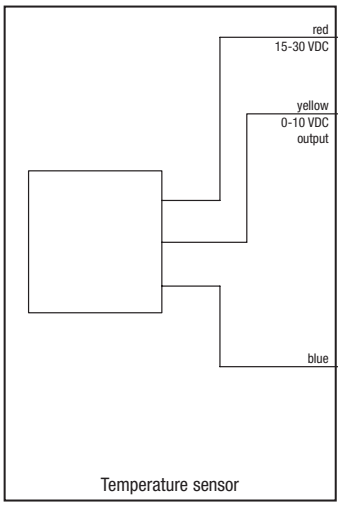

– **Output voltage depending on temperature:**

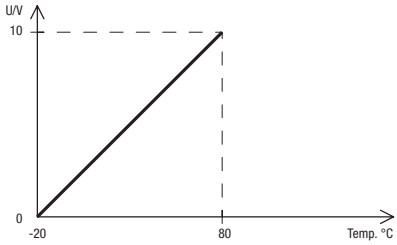

Tolerance ±3 K

ebmpapst

Temperature control module

Nominal data	Nominal voltage	Current draw	Output voltage	Output current	Output impedance	Temperature control range	Mass
Part no.	**VDC**	**mA**	**VDC**	**mA**	**kΩ**	**°C**	**kg**
50002-1-0174	18-60	10	2-10	0.1	6.8	+30 to +55	0.02
50003-1-0174	18-60	10	0-10	0.1	6.8	+10 to +45	0.02

subject to alterations

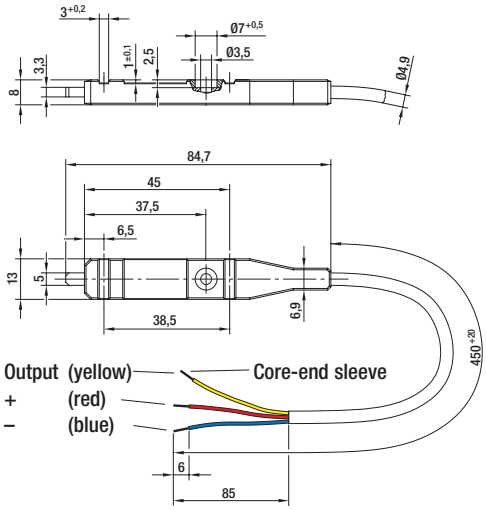

– **Electr. connection:**

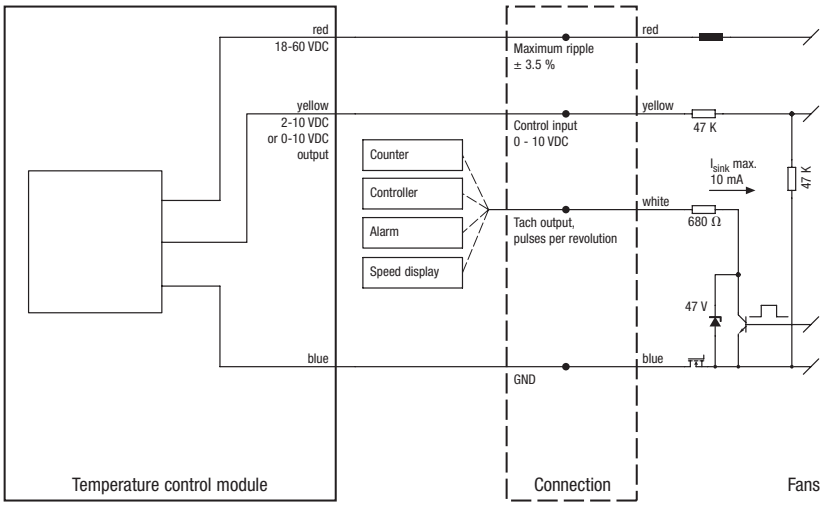

– **Control function:** Both designs have "cooling" as control function

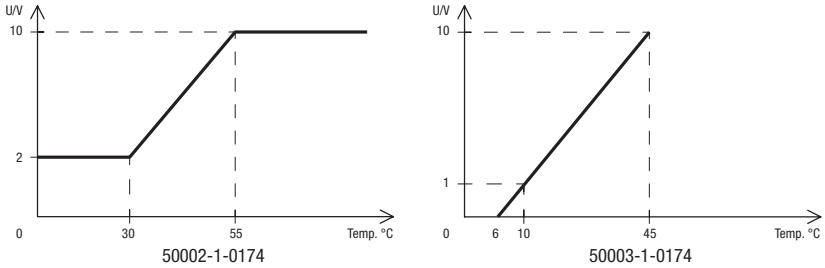

Tolerance ±3 K

Pressure control with integrated pressure sensor

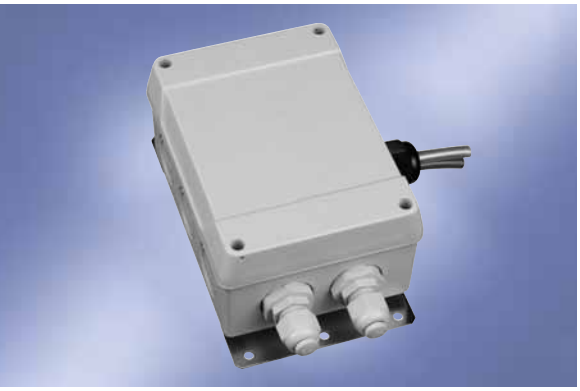

- **Functions:** Integrated PID controller, day/night/linear set point preset, integrated set point potentiometer for day and night, external set point preset via potentiometer
- **Pressure sensor:** 0-500 Pa, bursting strength 200 mbar, for non-aggressive gaseous media
- **Type of protection:** IP 55

Nominal data	Nominal voltage range	Frequency	Nominal voltage, alternative	Pressure control range	Perm. amb. temp.
Type	**VAC**	**Hz**	**VDC**	**Pa**	**°C**
CCC 000-AC04 -01	1~ 100-277	50/60	20 @ 50 mA	50-500	-25 to +60

subject to alterations

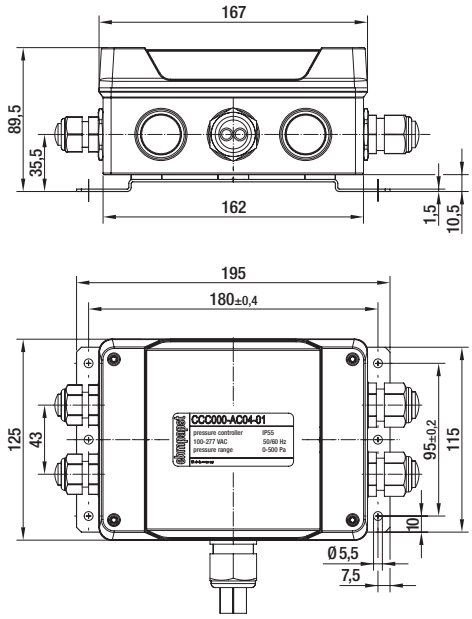

ebmpapst

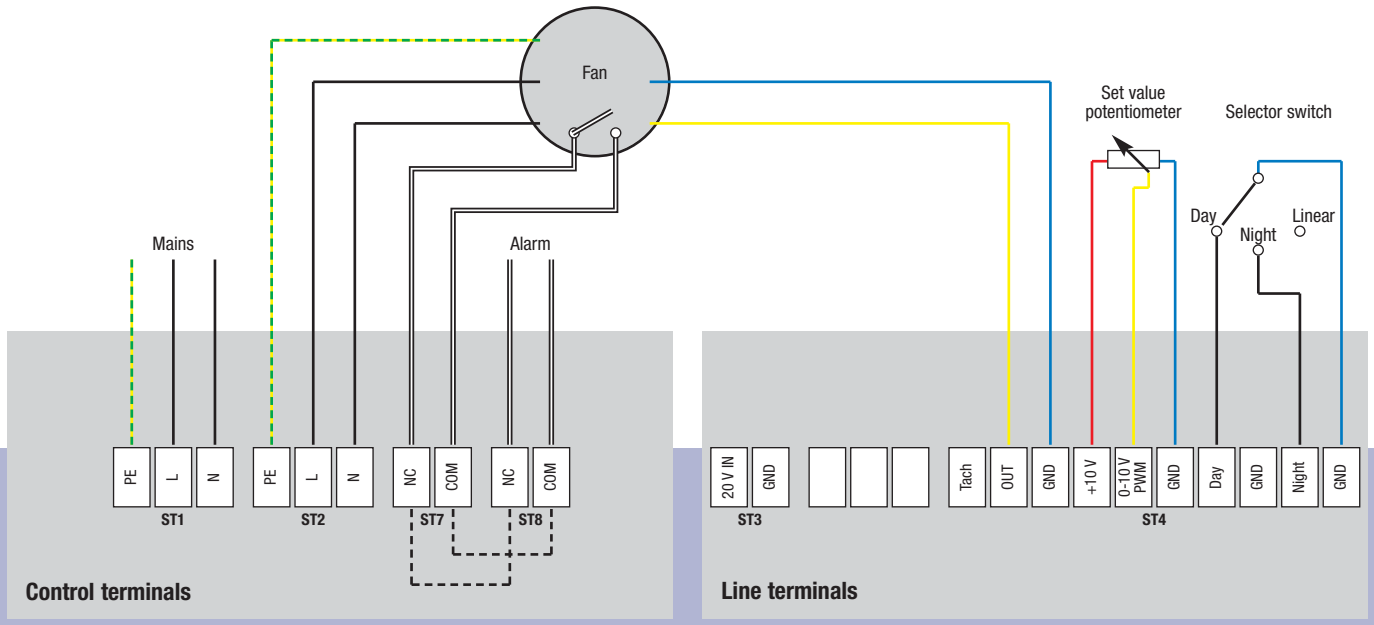

Connector	Connection	Assignment / function
ST1	PE	Protective earth
	L	Mains 50/60 Hz, phase
	N	Mains 50/60 Hz, neutral
ST2	PE	Protective earth
	L	Mains 50/60 Hz, phase
	N	Mains 50/60 Hz, neutral
ST7	NC	Relay contact for alarm, break for failure
	COM	Relay contact for alarm
ST8	NC	Relay contact for alarm, break for failure
	COM	Relay contact for alarm

Connector	Connection	Assignment / function
ST3	20 V IN	DC voltage supply (optional),
		with reverse polarity protection
	GND	GND
ST4	Tach	Tach output from fan
	OUT	Control voltage for fan, 0-10 V
	GND	GND
	+10 V	Set value potentiometer,
		supply 10 V (-10 %), 10 mA
	0-10 V PWM	Set value potentiometer
	GND	Set value potentiometer
	Day	Selector switch terminal
	GND	Selector switch terminal
	Night	Selector switch terminal
	GND	Selector switch terminal

Selection module for 3 speeds

- **General remarks:** Using an external selector switch, one of three preset speeds can be chosen. Presetting is done via one integrated potentiometer each.
- **Material:** Plastics
- **Type of protection:** IP 20

Type
CBC 000-AE04 -01
subject to alterations

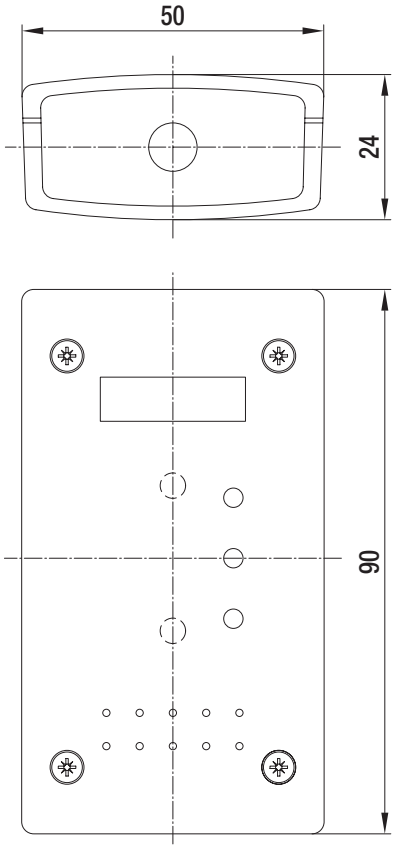

– **Electr. connection:**

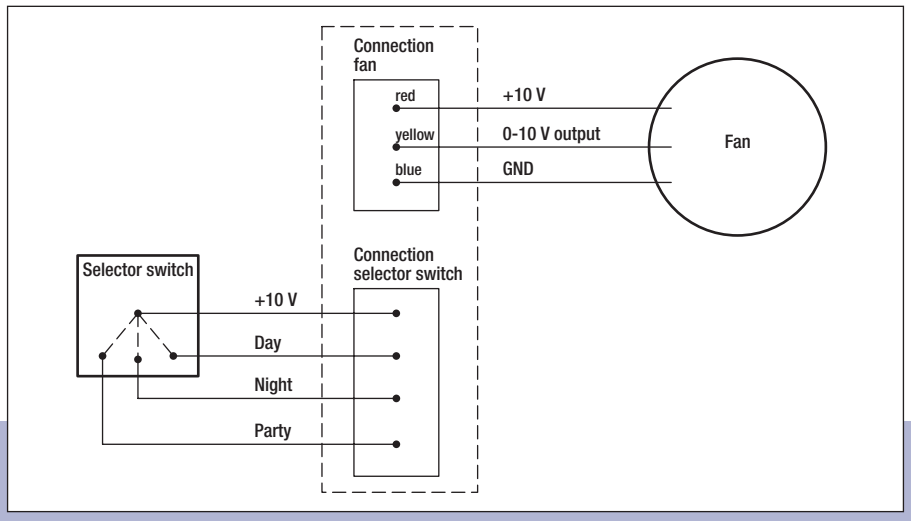

Interface converter RS232 - RS485

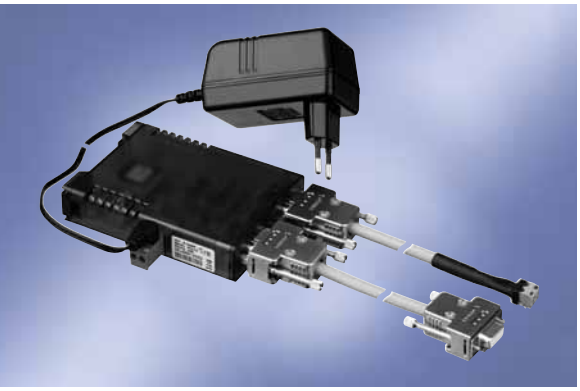

- **General remarks:** This interface converter permits bi-directional connection of RS232 devices (laptop or PC) with ebmBUS devices (electronic commutation units with RS485 interface)
- **Safety:** Electrical insulation between the RS232 and RS485 side is provided
- **Material:** Plastic housing for standard rail mounting according to DIN EN 50022-35
- **Status display:** Via LEDs
  green: supply voltage OK
  red: data exchange

Nominal data		Nominal voltage power supply	Supply voltage	Current draw at no-load operation	Mass (incl. PS)
Part no.		**VAC**	**VAC / VDC**	**mA**	**kg**
21487-1-0174	1~	230	12-24	150	0.4

subject to alterations

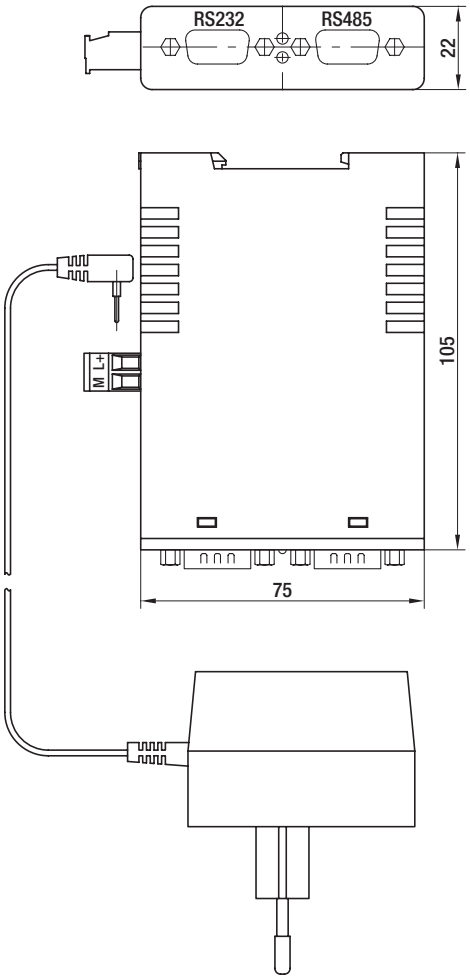

- **Mode of operation:** RS485 2-wire mode with echo and automatic control
- **Galvanic insulation:** Min. 1kV insulation voltage between RS232 and RS485 interfaces and between power supply and interfaces
- **ESD immunity:** Up to 15 kV (acc. to IEC 801-2, Stage 4)
- **Delivery scope:**
  - Interface converter
  - Supply plug unit (230 VAC / 12 VDC, 500 mA)
  - Adaptor leads with 2 x 9-pole SUB-D sockets
  - Adaptor leads with 9-pole SUB-D socket
  - Screw terminal RS485

ebmpapst

Interface converter RS232 - RS485

- **General remarks:** This interface converter permits bi-directional connection of RS232 devices (laptop / PDA) with ebmBUS devices (electronic commutation units with RS485 interface). Power supplied by RS232 of the laptop / PDA.
- **Material:** Plastic housing
- **Status display:** Via LEDs
  PWR: Power supply
  TXD: Data transfer (send)
  RXD: Data transfer (receive)

Nominal data	Mass
Part no.	**kg**
21495-2-0174	0.1

subject to alterations

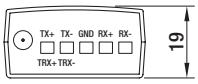

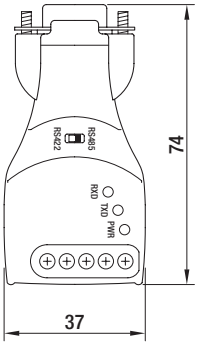

- **Mode of operation:** RS485 2-wire mode with echo and automatic control
- **Delivery scope:** Interface converter, English-language operating manual
- **Electrical terminals:** Screw terminal, TRX+ = RSA, TRX– = RSB

RS485 repeater

- **General remarks:** The physical RS485 repeater is used for the connection of two segments on an RS485 basis. It can split a segment with network bus wires that are too long, or with too many nodes into two smaller, standardised units. A maximum of 31 nodes can be connected to the repeater.
- **Installation:** The repeater housing is mounted on the wall or in the cable duct with two screws (Ø 4 mm) or with cable ties.
- **Material:** Housing made of galvanised sheet steel
- **Type of protection:** IP 20 according to DIN EN 60529

Nominal data	Supply voltage	Frequency	Power input	Perm. operating temp.	Perm. storage temp.	Mass
Part no.	**VAC**	**Hz**	**VA**	**°C**	**°C**	**kg**
25708-1-0174	1~ 200-277	50/60	< 3	0 to +50	-20 to +70	0.3

subject to alterations

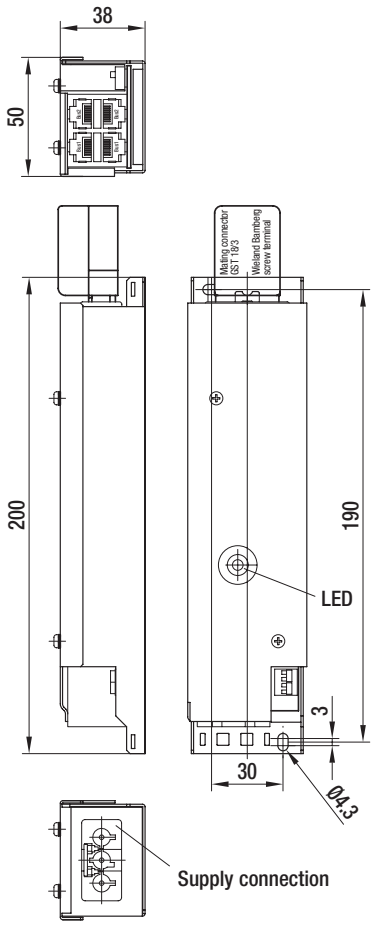

- **Type of transceiver:** 2 x ANSI standard RS485 transceiver
- **Galvanic insulation:** Operating insulation 500 V between both channels
- **Network connection:** Screw terminals
- **Mains connection:** Wieland connector GST 18/3 (part of delivery)
- **Pin configuration of network:**

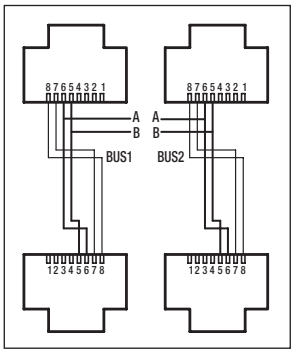

Pin No.	Assignment / function
1 - 4	not assigned
5	Connection RS485, line B
6	Connection RS485, line B
7, 8	not assigned
	(each looped through within BUS1 and BUS2)

ebmpapst

RS485 terminal box with lead connections

for centrifugal fans with EC motor size 084 (ebmBUS, RS485)

- **General remarks:** RS485 terminal box with
  - 2x RJ45 sockets for ebmBUS
  - ebmBUS line with Molex Mini-Fit female connector for connection to the motor
  - 3-pole 4-pin unit connector with AMP Mate-N-Lock female connector to connect to motor
  - Mode of operation display (LED2 green) and alarm display (LED 1 red)
- **Delivery scope:**
  - Terminal Box
  - Supply line (800 mm)
  - ebmBUS line (800 mm)
- **Material:** ABS (fire rating V0 according to UL)

Part no.
54002-4-1040

subject to alterations

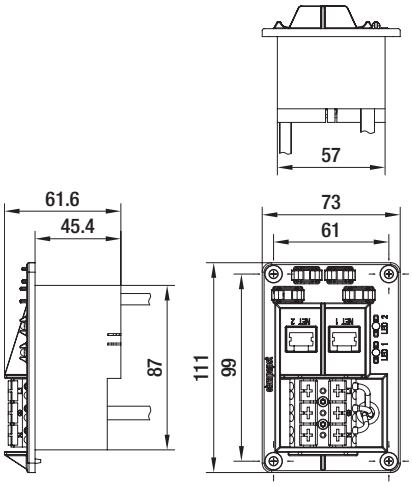

Mounting dimensions

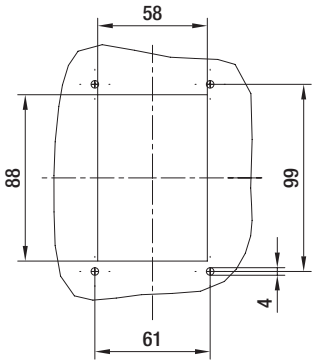

- **Pin configuration of supply lead:**

Colour	Assignment / function
green/yellow	PE
black 2	N
black 1	L

- **Pin configuration of ebmBUS lead:**

Colour	Assignment / function
yellow	RS A
white	RS B
red	Operation: +15 V Alarm: 0 V
blue	Operation: 0 V Alarm: +15 V

- **Pin configuration of RJ45 sockets:**

Pin No.	Assignment / function
5	RS B
6	RS A

Hand-held control terminal

- **General remarks:** Terminal to control networked fans and to set their parameters; RS485 (ebmBUS)
- **Type of protection:** IP 20 (acc. to DIN EN 60529)
- **Protection class:** III
- **Display:** Plain text LCD, 2x8 characters
- **Accumulator and charging electronics:** 2 x round cell R6 DIN 40863 NiMH 1,500 mAh, operating time approx. 40 hrs, standby time approx. 100 days, charging time max. 4 hrs.
- **Parts included in delivery:** Hand-held control terminal, power supply and accumulator unit, BUS cable, 2 x round cell R6 NiMH 1,500 mAh

Nominal data	Nominal voltage range power supply		Frequency	Supply voltage	Perm. amb. temp.	Perm. storage temp.	Mass
Type		**VAC**	**Hz**	**VDC**	**°C**	**°C**	**kg**
CBC 000-AB06 -01	1~	100-240	50/60	12	0 to +45	-20 to +65	0.4

subject to alterations

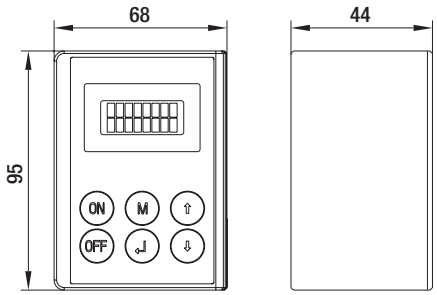

ebmpapst

Speed setting device

with housing

- **Material:** Housing made of plastic
- **Type of protection:** IP 54
- **Design:** The speed setting device can be operated with the entire range of ebm-papst EC fans. It is supplied with current via the fan's DC output and supplies a 0-10 V signal that allows infinitely variable open loop speed control. The control also permits fan speed measurement using a multimeter equipped with a frequency meter (for which a tach output is given from the fan).
- **Cable inputs:** 4 x M16 or M20
- **Mounting holes:** Suitable for 4 mm mounts

Nominal data	Supply voltage	Max. current draw	Resistance	Perm. amb. temp.	Mass
Type	**VDC**	**mA**	**kΩ**	**°C**	**kg**
CLC 000-AE04 -01	10	1.1	0-10 Lin	50	0.10

subject to alterations

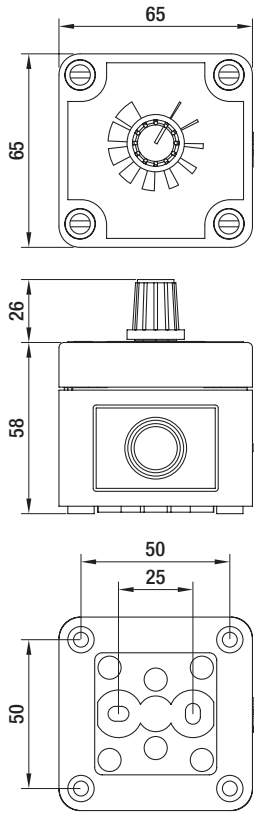

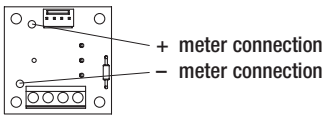

- **Speed measurement:** Connect a frequency meter to the connection points (labelled + and -) on the PCB board. The fan has an output of 1 pulse per revolution, so that the measured frequency can be converted into rpm using the following equation:

  rpm = frequency (Hz) x 60
- **Comment:**
  - A single controller can be used to control multiple fans with the same speed setting.
  - The connection to the controller is made using four screw connections or one Molex connection (adaptor lead available).
  - If the tach cable is required, this device can only be connected to one fan. Note that in rare operating cases, it is possible that permanent connection of the tach cable can cause a slight decrease in the maximum speed.

ebmpapst

– **Electr. connection:**

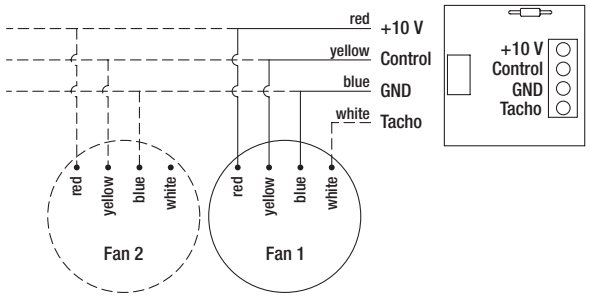

Speed setting device

without housing

- **Design:** The speed setting device can be operated with the entire range of ebm-papst EC fans. It is supplied with current via the fan's DC output and supplies a 0-10 V signal that allows infinitely variable open loop speed control. The control also permits fan speed measurement using a multimeter equipped with a frequency meter (for which a tach output is given from the fan).
- **Mounting hole:** 10 mm

Nominal data	Supply voltage	Max. current draw	Resistance	Perm. amb. temp.	Mass
Type	**VDC**	**mA**	**kΩ**	**°C**	**kg**
CLC 000-AD04 -01	10	1.1	0-10 Lin	50	0.05

subject to alterations

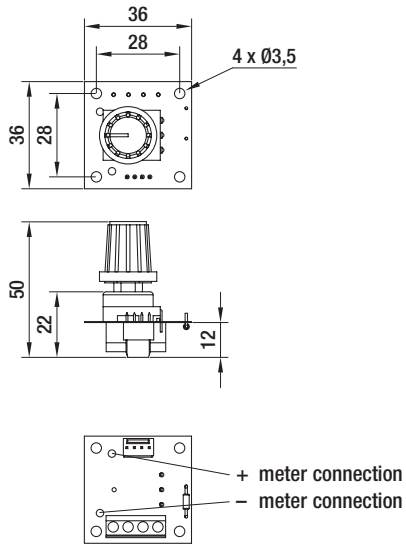

- **Speed measurement:** Connect a frequency meter to the connection points (labelled + and -) on the PCB board. The fan has an output of 1 pulse per revolution, so that the measured frequency can be converted into rpm using the following equation:

  rpm = frequency (Hz) x 60
- **Comment:**
  - A single controller can be used to control multiple fans with the same speed setting.
  - The connection to the controller is made using four screw connections or one Molex connection (adaptor lead available).
  - If the tach cable is required, this device can only be connected to one fan. Note that in rare operating cases, it is possible that permanent connection of the tach cable can cause a slight decrease in the maximum speed.

– **Electr. connection:**

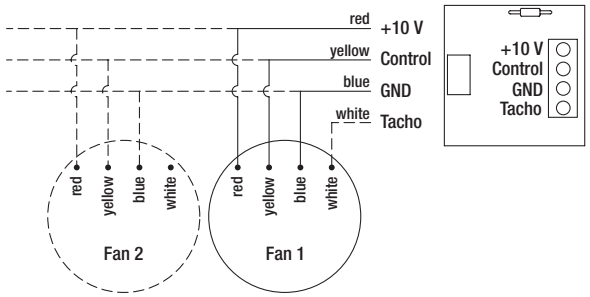

LISA

Control software for EC-SYSTEMS

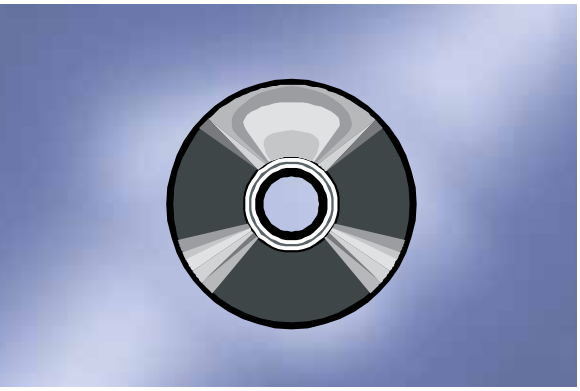

- **Version:** LISA 5.1
- **Features:**
  - Individual control and monitoring of 7,905 fans
  - Group-oriented arrangement of the fans
  - Level 1: Overview display for 10 floors
  - Level 2: Overview display for 255 groups within a floor
  - Level 3: Overview display for 31 fans within a group
  - Broadcast command for one group or all fans
  - Speed, temperature or pressure control
  - Error message

Part no.

25711-2-0199

subject to alterations

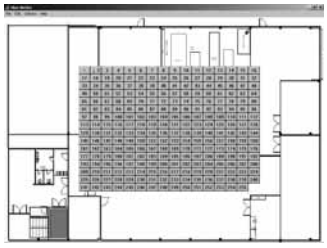

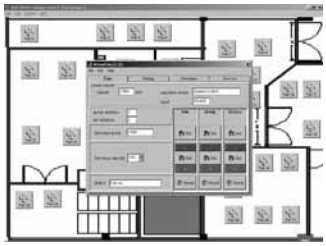

- **Suitable for:** EC motors and electronics with ebmBUS
- **System requirements:** Windows 2000 / XP

ebmpapst

Fan Control

Control software & accessories for Pocket PCs / PDAs

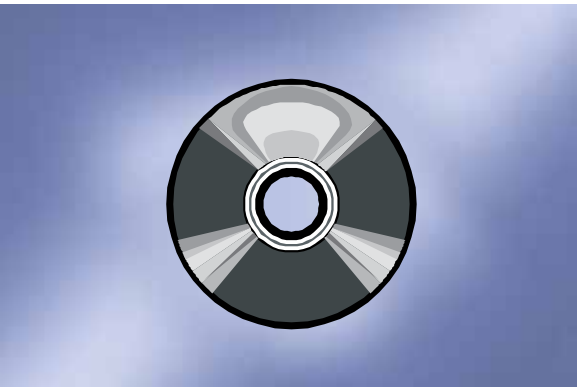

- **Version:** Fan Control 1.00
- **Features:**
  - Managing up to 31 fans
  - Setting pre-set values and indicating actual values
  - Setting parameters for PID control
  - Setting fan address
  - Setting mode of operation (heating/cooling)
  - Alarm diagnosis
  - Language selection for user interface

Part no.
21500-1-0174
subject to alterations

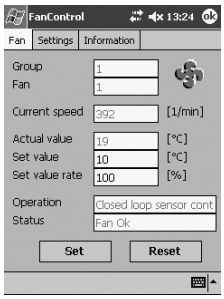

Set and actual values

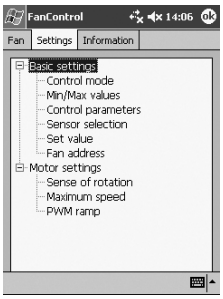

Mode of operation

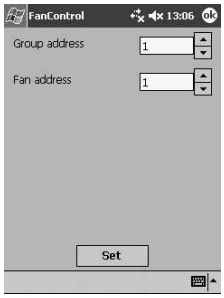

Fan address

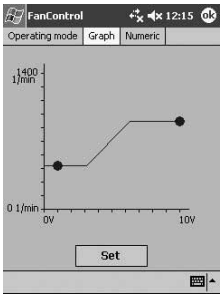

Graphic setting

- **Delivery scope:** Installation-CD, interface converter (RS232-RS485), BUS cable, installation instruction and detailed manual (PDF). The Pocket PC / PDA and compatible serial communication cables are not included in the scope of delivery.
- **Suitable for:** EC motors and electronics with ebmBUS
- **System requirements:** Pocket PC / PDA with Windows Mobile 5.0, RS232 interface, and serial communication cable.
- **Compatible Pocket PCs / PDAs:** (as of 2006-09-14)
  - Hewlett-Packard rx1950
  - Hewlett-Packard hx2190
  - Fujitsu-Siemens Pocket Loox C550
  - Dell Axim x51v (624 MHz)

  Refer to our website at www.ebmpapst.com/downloads for a continuously updated list of approved Pocket PCs / PDAs along with the suitable serial communication cables.

HMS controller

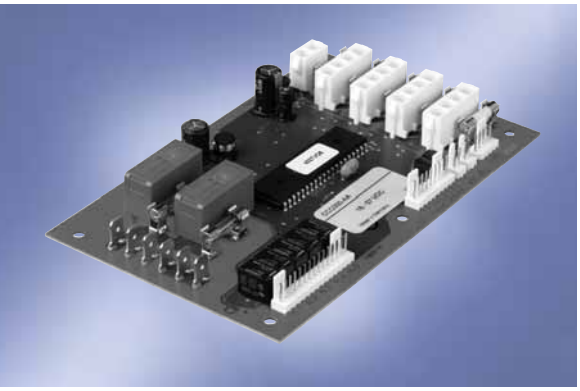

– **General remarks:** The HMS controller is governed by a microprocessor and is specifically designed for Heat Management Systems (= HMS). This controller allows for an almost limitless programming variety as regards customer-specific fan speed / temperature profiles. Moreover, this controller offers a multitude of the most diverse alarm configurations.
Our HMS controller has been specially designed and adjusted to the product range of ebm-papst in Mulfingen. Thus, any size of our fans or blowers can be used.
The most diverse of applications needing temperature-dependent control are possible. Among these are applications in telecommunication and the IT industry, in refrigeration and air-conditioning as well as in specific industrial plants and systems.

Nominal data	Supply voltage	Power input (1), max.	Power input (2), max.	Current draw (1) max.	Perm. amb. temp.	Mass
Type	**VDC**	**W**	**W**	**A**	**°C**	**kg**
CCC 000-AA05 -03	16-57	10	130	0.175	-40 to +70	0.15

subject to alterations (1) without fans (2) per fan at nominal voltage

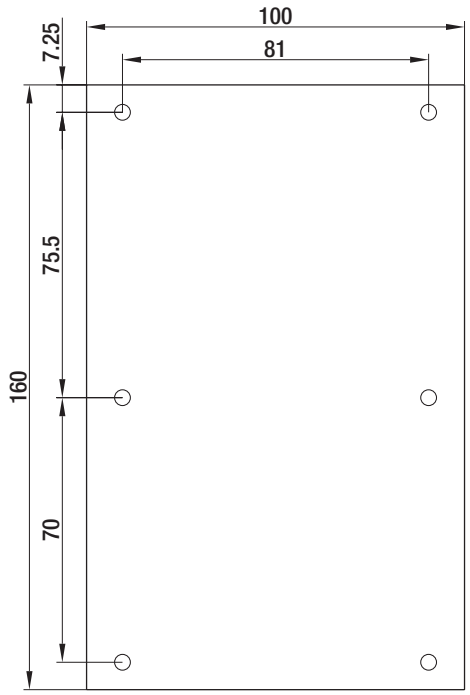

– **Features:**
- 4 fan speed / temperature characteristics that can be programmed independently of each other
- 2 programmable no-frost relays for connecting 115 / 230 VAC heating devices
- 5 programmable alarm relays (with time lag):
  - Temperature alarm (over / under-temperature)
  - Fan good / bad alarm programming
  - Temperature sensor alarm
  - Programmable depending on signal inputs
- 4 programmable status outputs (with time lag):
  - With "open collector" design to connect optical or acoustic displays / alarms
  - Each fan speed can be set individually
- 4 signal inputs for external switches / limit switches
- Connection of two independent temperature sensors (NTCs) possible
- RS232 interface galvanic insulated
- Selective protection of each fan
- Programming via Windows software (terminal program version 15 ff.: part no. 25710-2-0199)

– **Requirements:**
- Supply voltage of HMS controller: 16-57 VDC
- Fans with standard interface
  - 24 / 48 VDC fan voltage
  - PWM / linear control input (0-10 V)
  - Open collector tach output
- NTC with R_{25} = 33 kΩ (EPCOS type M 891/33k/J)
- System requirements: Windows 2000 / XP

– **Safety:** According to EN 50178

– **EMC / EMI:** Interference immunity EN 61000, interference emission EN 50081-1

ebmpapst

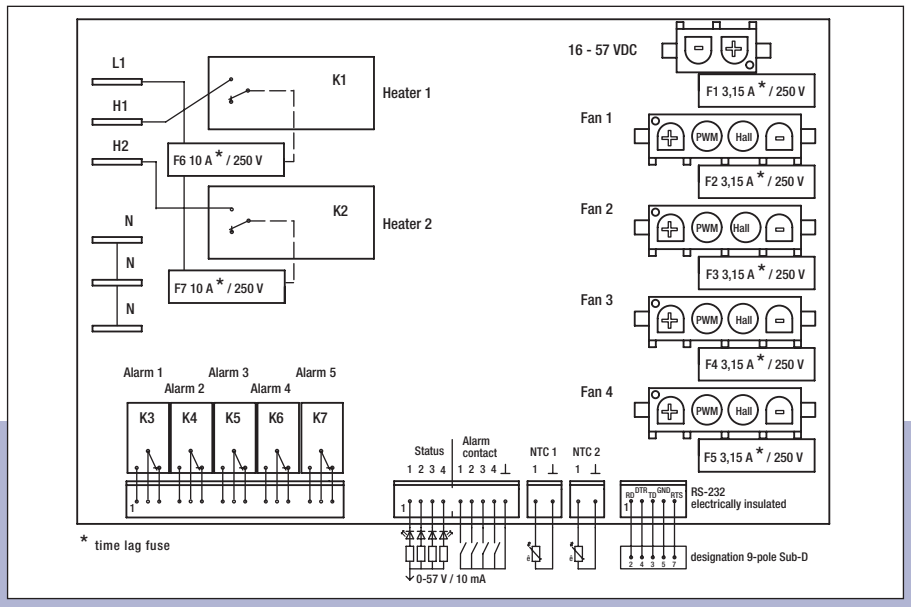
L1
H1
H2
N
N
N
K1
Heater 1
F6 10 A * / 250 V
K2
Heater 2
F7 10 A * / 250 V
16 - 57 VDC
F1 3,15 A * / 250 V
Fan 1
PWM
Hall
F2 3,15 A * / 250 V
Fan 2
F3 3,15 A * / 250 V
Fan 3
F4 3,15 A * / 250 V
Fan 4
F5 3,15 A * / 250 V
Alarm 1
Alarm 2
Alarm 3
Alarm 4
Alarm 5
K3
K4
K5
K6
K7
Status
Alarm contact
1 2 3 4
1 2 3 4
NTC 1
NTC 2
RS-232 electrically insulated
designation 9-pole Sub-D
0-57 V / 10 mA
* time lag fuse

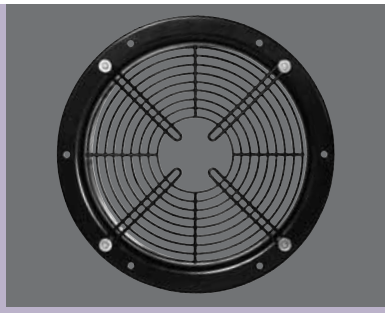

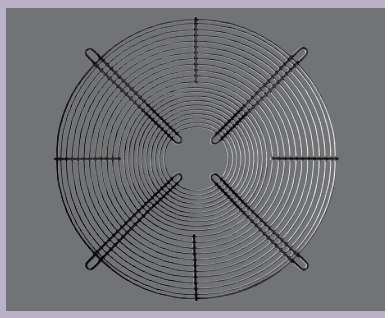

Accessories

Guard grilles, streamers	362
Wall rings	372
Connection lines	374
Accessories for Q-motors and energy-saving motors (ESM)	374
Terminal boxes, capacitors, speed setting devices, motor protection switches, star-delta switches, repair switches	381

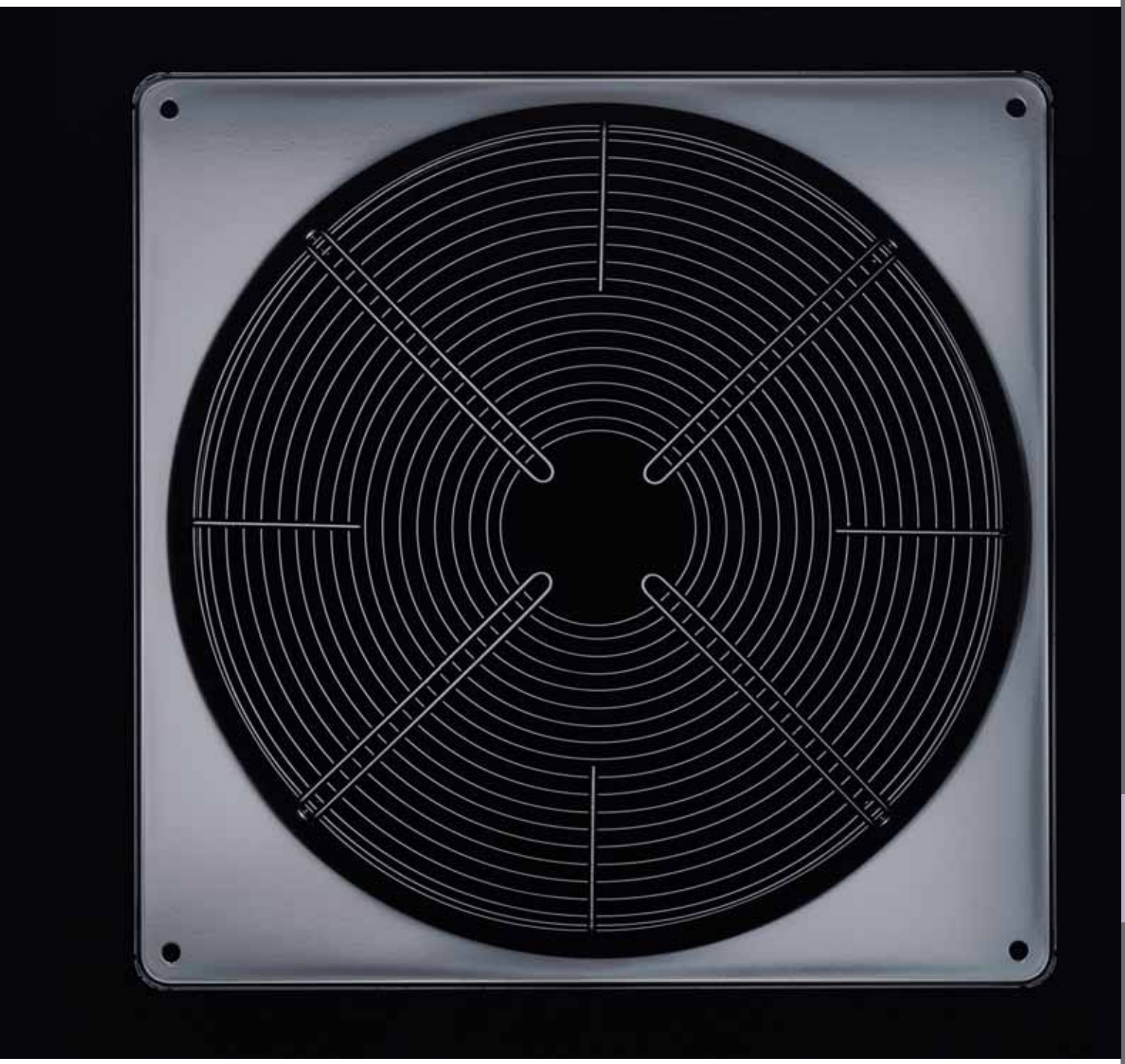

Guard grille

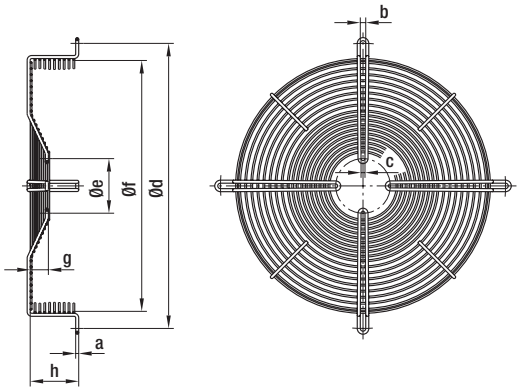

– **Material:** Steel, phosphated and coated in black plastic

Basket guard grille for S series axial fans

Part no.	Size	AC motor	EC motor	a	b	c	d	e	f	g	h
19110-2-4039	200	068	074 (1)	3.9	6.5	4.3	260.0	25.0	229.0	—	39.0
19111-2-4039	250	068	074 (1)	3.9	6.5	4.5	300.0	25.0	271.0	—	38.0
19112-2-4039	250	068	074 (1)	3.9	6.5	4.5	300.0	25.0	271.0	—	53.0
74251-2-4039	250	—	074 (2)	5.0	6.2	4.2	300.0	125.0	265.0	—	38.0
64555-2-4039	300	068	074 (1)	4.5	4.3	4.3	360.0	58.0	329.5	—	50.0
64556-2-4039	300	068	—	4.5	4.3	4.3	360.0	58.0	329.5	26.0	50.0
64557-2-4039	300	074	—	5.0	6.5	6.5	360.0	90.0	324.0	—	50.0
74301-2-4039	300	—	074 (2)	5.0	4.2	4.2	360.0	125.0	331.0	10.0	60.0
64558-2-4039	315	068	—	4.5	6.5	4.5	375.0	58.0	336.5	30.0	80.0
74316-2-4039	315	—	074 (2)	5.0	6.4	4.2	375.0	125.0	344.0	35.0	85.0
64559-2-4039	330	068	—	4.5	6.5	4.5	410.0	58.0	354.5	30.0	80.0
74331-2-4039	330	—	074 (2)	5.0	6.4	4.2	410.0	125.0	370.0	35.0	85.0
64562-2-4039	350	068	—	5.0	6.5	4.5	422.0	58.0	374.0	30.0	80.0
74351-2-4039	350	—	074 (2)	5.0	6.4	4.2	422.0	125.0	378.0	35.0	85.0
64379-2-4039	400	074	—	5.0	9.0	6.5	470.0	90.0	414.0	30.0	80.0
74370-2-4039	400	—	084 (2)	5.0	9.0	6.5	470.0	164.0	420.0	30.0	80.0
64536-2-4039	420	074	—	5.0	9.0	6.5	502.0	90.0	452.0	30.0	80.0
64570-2-4039	420	094	—	5.0	9.0	6.5	502.0	115.0	452.0	30.0	60.0
64378-2-4039	450	074	—	5.0	9.0	6.5	522.0	90.0	476.0	30.0	80.0
74372-2-4039	450	—	084 (2)	5.0	9.0	6.5	522.0	164.0	482.0	30.0	80.0
25943-2-4039	450	094 (3)	—	6.0	9.0	6.5	522.0	115.0	472.0	17.5	67.5
25938-2-4039	450	094 (4)	—	7.0	9.0	7.0	515.0	115.0	472.0	16.5	80.0

subject to alterations (1) DC-fed (2) Mains-powered (3) Blades made of plastic (4) Blades made of sheet steel

Guard grille

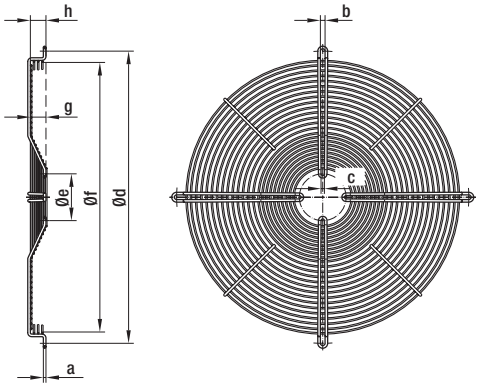

– **Material:** Steel, phosphated and coated in black plastic

Guard grille for S-series axial fans

Part no.	Size	AC motor	EC motor	a	b	c	d	e	f	g	h
18656-2-4039	200	068	—	3.9	4.6	4.6	245.0	58.0	—	—	—
62622-2-4039	200	—	074 (1)	3.9	4.6	4.6	245.0	58.0	—	—	—
09414-2-4039	250	068	—	3.9	4.6	4.6	290.0	58.0	—	—	—
62623-2-4039	250	—	074 (1)	3.9	4.6	4.6	290.0	58.0	—	—	—
74250-2-4039	250	—	074 (2)	5.0	4.2	4.2	290.0	125.0	—	—	—
09415-2-4039	300	068	—	3.9	4.6	4.6	360.0	58.0	—	—	—
62624-2-4039	300	—	074 (1)	3.9	4.6	4.6	360.0	58.0	—	—	—
72320-2-4039	300	068	—	4.5	4.3	4.3	360.0	58.0	329.0	26.0	26.0
64052-2-4039	300	074	—	5.0	6.5	6.5	360.0	90.0	—	—	—
74300-2-4039	300	—	074 (2)	5.0	4.2	4.2	360.0	125.0	—	—	—
64491-2-4039	315	068	—	4.5	6.4	4.3	375.0	58.0	336.0	33.0	30.0
74315-2-4039	315	—	074 (2)	5.0	6.4	4.2	375.0	125.0	344.0	35.0	35.0
64490-2-4039	330	068	—	4.5	6.4	4.3	410.0	58.0	371.0	30.0	30.0
74330-2-4039	330	—	074 (2)	5.0	6.4	4.2	410.0	125.0	370.0	35.0	35.0
64563-2-4039	350	068	—	5.0	6.5	4.5	422.0	58.0	374.0	30.0	30.0
74350-2-4039	350	—	074 (2)	5.0	6.4	4.2	422.0	125.0	378.0	35.0	35.0
64538-2-4039	400 / 420	074	—	5.0	9.0	6.5	502.0	90.0	452.0	30.0	30.0
74373-2-4039	400	—	084 (2)	5.0	9.0	6.5	502.0	164.0	458.0	30.0	38.0
64539-2-4039	450	074	—	5.0	9.0	6.5	522.0	90.0	476.0	30.0	30.0
74374-2-4039	450	—	084 (2)	5.0	9.0	6.5	522.0	164.0	482.0	30.0	38.0
25950-2-4039	450	094	—	7.0	9.0	7.0	560.0	115.0	517.0	16.5	38.0

subject to alterations (1) DC-powered (2) Mains-powered

Guard grille

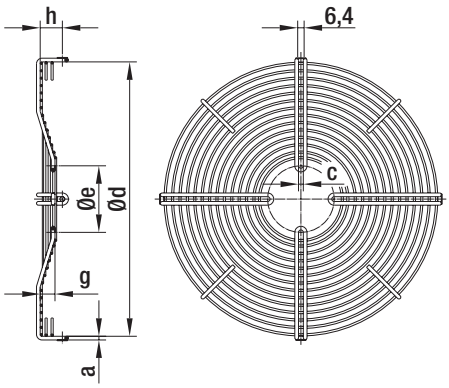

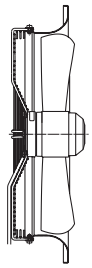

Typical installation

- **Material:** Steel, phosphated and coated in black plastic
- **Wall rings:** See p. 373
- **Comment:** Contact us for article numbers for complete fans.

Guard grille for S series fans (for nozzle-side mounting to square wall ring with long nozzle)

Part no.	Size	AC motor	EC motor	a	c	d	e	g	h
35803-2-4039	400	074 (4 poles)	—	5.0	6.5	413.0	90.0	—	16.0
35804-2-4039	400	074 (6 poles)	—	5.0	6.5	413.0	90.0	30.0	28.0
74377-2-4039	400	—	084 (2)	5.0	6.5	413.0	164.0	30.0	48.0
35805-2-4039	450	074 (4 poles)	—	5.0	6.5	466.0	90.0	—	25.0
35806-2-4039	450	074 (6 poles)	—	5.0	6.5	466.0	90.0	20.0	30.0
74376-2-4039	450	—	084 (2)	5.0	6.5	467.0	164.0	30.0	48.0
26510-2-4039	450	094	—	7.0	7.0	466.0	115.0	16.5	41.0

subject to alterations (2) mains-powered

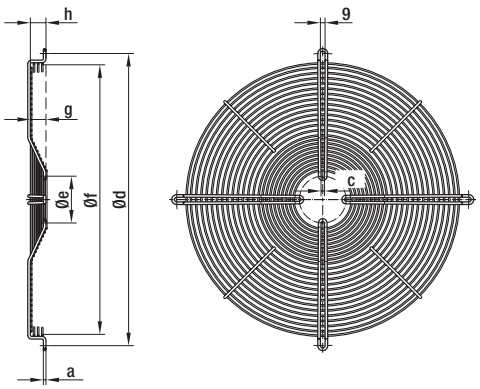

- **Material:** Steel, phosphated and coated in black plastic

Basket guard grille for S series fans (for mounting to square wall ring with long nozzle)

Part no.	Size	AC motor	EC motor	a	c	d	e	f	g	h
63978-2-4039	420 / 450	074	—	5.0	6.5	562.0	90.0	526.0	30.0	30.0
74375-2-4039	450	—	084 (2)	5.0	6.5	562.0	164.0	526.0	30.0	38.0
25950-2-4039	450	094	—	7.0	7.0	560.0	115.0	523.0	16.5	38.0

subject to alterations (2) mains-powered

Guard grille

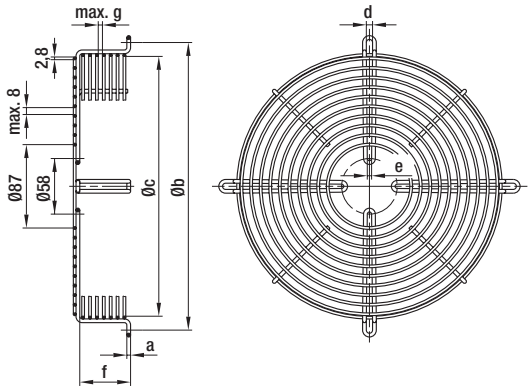

– **Material:** Steel, phosphated and coated in black plastic

Basket guard grille for A series axial fans

Part no.	Size	a	b	c	d	e	f	g
19110-2-4039	200	3.9	260.0	229.0	6.5	4.3	39.0	6.0
19111-2-4039	250	3.9	300.0	271.0	6.5	4.5	38.0	6.0
19112-2-4039	250	3.9	300.0	271.0	6.5	4.5	53.0	6.0
19113-2-4039	300	3.9	360.0	327.0	6.5	4.5	35.0	6.0
19114-2-4039	350	4.5	422.0	375.0	6.5	4.5	72.0	6.0
19115-2-4039	350	4.5	422.0	380.0	6.5	4.5	54.0	6.0
63406-2-4039	400	4.5	470.0	428.0	9.0	4.5	67.0	8.0

subject to alterations

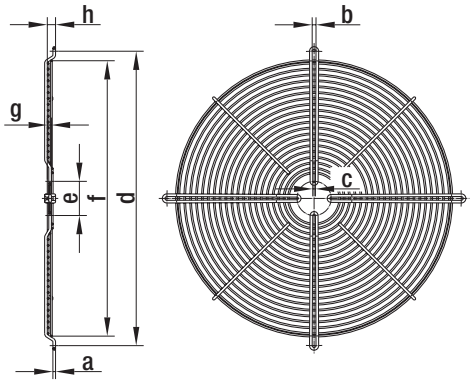

– **Material:** Steel, phosphated and coated in black plastic

Guard grille for A series axial fans

Part no.	Size	a	b	c	d	e	f	g	h
18656-2-4039	200	3.9	4.6	4.6	245.0	58.0	195.0	—	—
09414-2-4039	250	3.9	4.6	4.6	290.0	58.0	247.0	—	—
09415-2-4039	300	3.9	4.6	4.6	360.0	58.0	300.0	—	—
19699-2-4039	315	4.5	6.3	4.3	375.0	58.0	327.0	—	3.5
69667-2-4039	350	4.5	6.5	4.5	422.0	58.0	387.0	—	6.5
19117-2-4039	400	4.5	6.3	4.3	500.0	58.0	467.5	7.0	14.0

subject to alterations

Guard grille

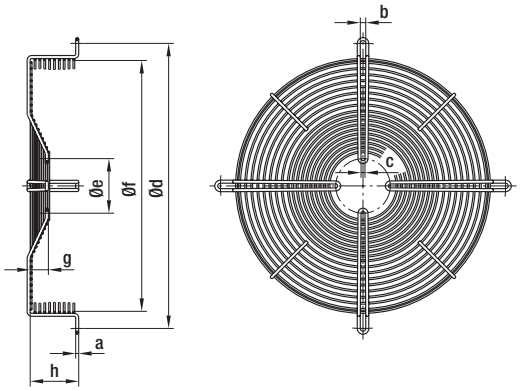

– **Material:** Steel, phosphated and coated in black plastic

Basket guard grille for K series axial fans

Part no.	Size	a	b	c	d	e	f	g	h
66024-2-4039	250	4.5	4.3	4.3	300.0	58.0	271.0	26.0	60.0
77709-2-4039	300	3.9	4.5	4.5	360.0	58.0	340.0	26.0	26.0
19115-2-4039	350	4.5	6.5	4.5	422.0	58.0	380.0	—	54.0
62229-2-4039	360	4.5	6.3	4.3	400.0	58.0	357.0	12.0	16.0
64378-2-4039	450	5.0	9.0	6.5	522.0	90.0	476.0	30.0	80.0
64539-2-4039	450	5.0	9.0	6.5	522.0	90.0	476.0	30.0	30.0

subject to alterations

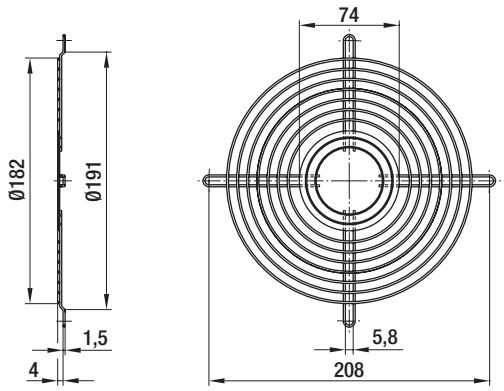

– **Material:** Steel, galvanized and blue chromated (alternative: nickel-plated)

Guard grille for diagonal fan

Part no.	Size
26388-2-4039	180

subject to alterations

ebmpapst

Guard grille

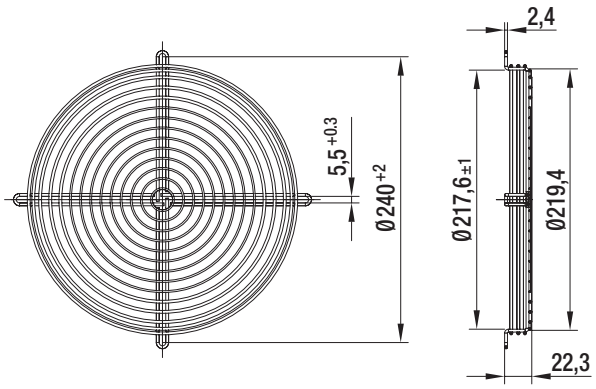

– **Material:** Steel, plastic-coated (silver-metallic gloss)

Guard grille for diagonal fan (inlet side mounting)

Part no.	Size
35139-2-4039	208

subject to alterations

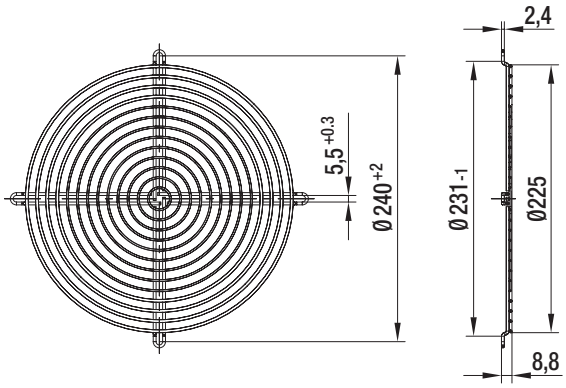

– **Material:** Steel, plastic-coated (silver-metallic gloss)

Guard grille for diagonal fan (outlet side mounting)

Part no.	Size
35138-2-4039	208

subject to alterations

Guard grille

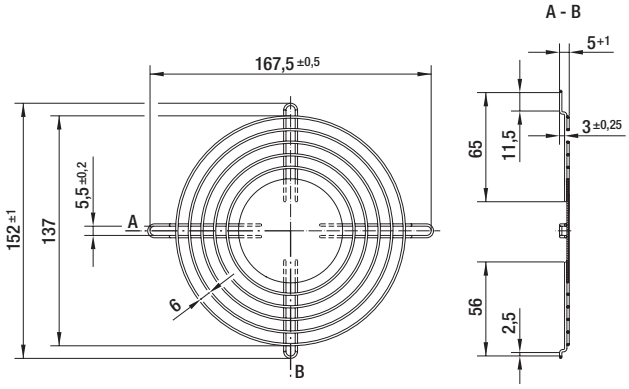

– **Material:** Steel, galvanized and blue passivated

Guard grille for diagonal fan

Part no.	Size
51019-2-4039	130

subject to alterations

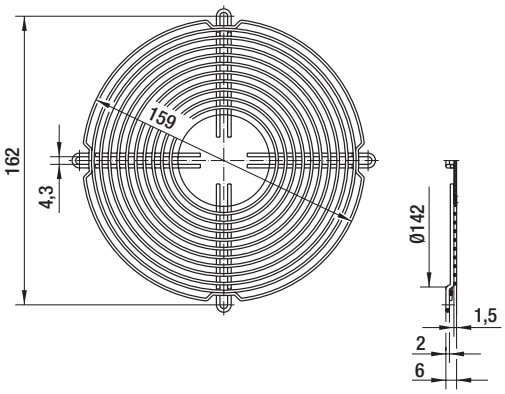

– **Material:** Steel, galvanized and blue chromated (alternative: nickel-plated)

Guard grille for axial fan (according to EN 294)

Part no.	Size
50952-2-4039	130 / 142 / 143

subject to alterations

Guard grille

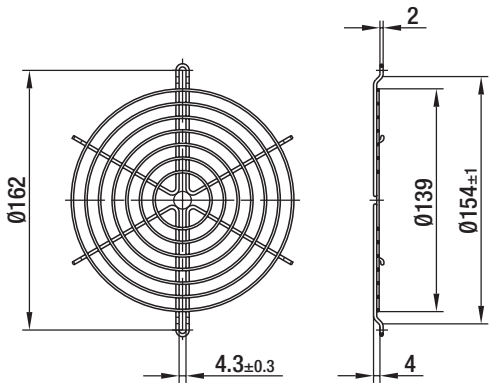

– **Material:** Steel, plastic-coated (silver-metallic gloss)

Guard grille for diagonal fan

Part no.	Size
03749-2-4039	142
04013-2-4039	143

subject to alterations

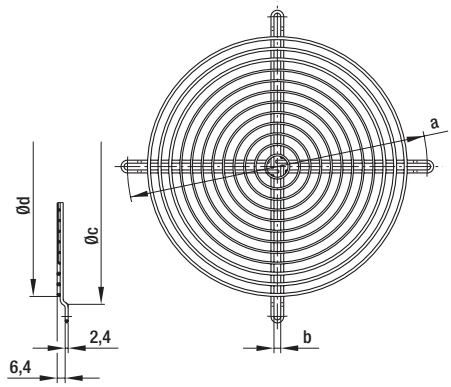

– **Material:** Steel, plastic-coated (silver-metallic gloss)

Guard grille for diagonal fan

Part no.	Size	a	b	c	d
78128-2-4039	200	240.0	5.4	221.5	208.0
09418-2-4039	250	295.0	6.4	278.5	270.0

subject to alterations

Guard grille

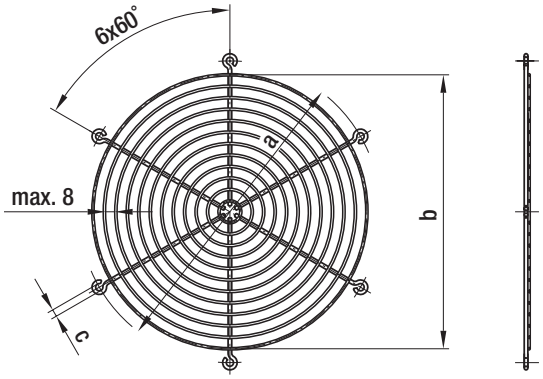

– **Material:** Steel, phosphated and coated in black plastic

Guard grilles (e.g. for axial fans)

Part no.	Size	a	b	c
09513-2-4039	200	250.0	227.0	6.0
09518-2-4039	250	295.0	265.0	7.0
09532-2-4039	300	380.0	323.0	9.0

subject to alterations

Streamers

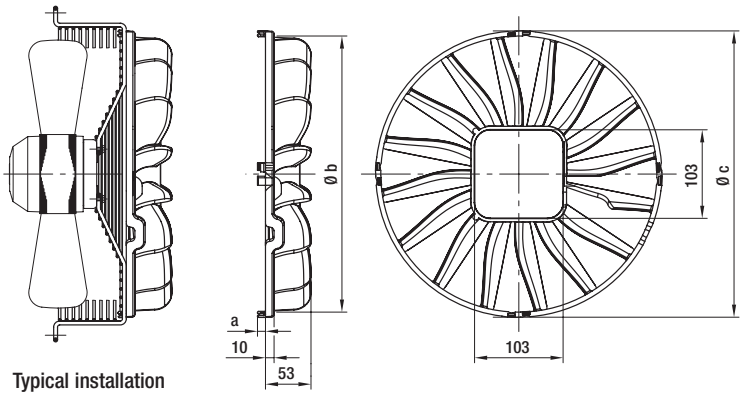

Typical installation

– **Material:** Plastic PA6, 30GV, black (in accordance with UL 94 HB)

Streamers for axial fans

Part no.	Size	a	b	c	Standard types (1)	
29550-2-2955	315	10.0	321.0	333.0	S4D 315-AP10 -30 S4E 315-AP18 -30 S6E 315-AP02 -30	
29551-2-2955	350	10.0	361.0	373.0	S4D 350-BR06 -30 S4D 350-AR06 -30 S4E 350-BR06 -30	S4E 350-AR06 -30 S6E 350-BR08 -30 S6E 350-AR08 -30
29552-2-2955	400	10.0	401.0	413.0	S4D 400-AP12 -03 S4E 400-AP02 -03 S6E 400-AP10 -30	
29553-2-2955	450	12.0	466.0	478.0	S4E 450-GA09 -01	
29554-2-2955	500	13.0	496.0	508.0	S4E 500-CY09 -01 S4E 500-AY09 -01 S6E 500-CS05 -01	S6E 500-AS05 -01 S6E 500-CT05 -01 S6E 500-AT05 -01

subject to alterations

(1) Mounting options for other axial fans respectively basket guard grilles upon request.

Thrust ranges (measured in a typical heat exchanger)

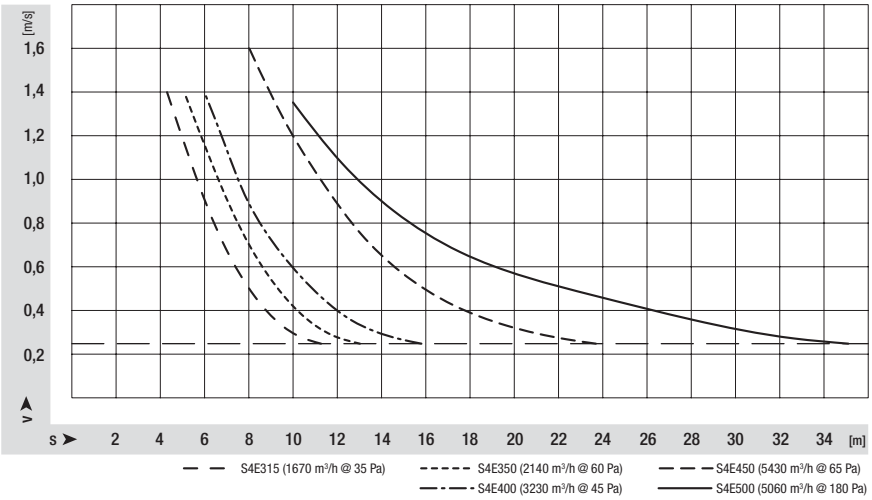

Comparison

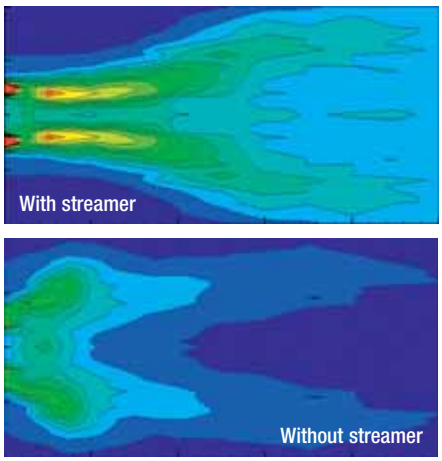

Wall rings

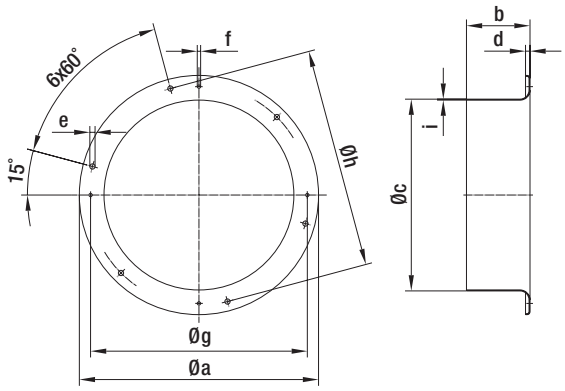

– **Material:** Sheet steel, pre-galvanised and coated in black plastic

Wall rings with long nozzle for axial fans

Part no.	Size	a	b	c	d	e	f	g	h	i
18912-2-4037	200	280.0	80.0	202.5	5.0	7.0	4.5	245.0	250.0	1.25
64009-2-4037	250 (S series)	320.0	86.5	259.5	6.0	7.0	4.5	290.0	295.0	1.25
18910-2-4037	250 (A series)	320.0	85.0	256.5	6.0	7.0	4.5	290.0	295.0	1.25
18908-2-4037	300	397.0	80.0	326.0	11.0	9.0	M4	360.0	380.0	1.50
18902-2-4037	315	397.0	74.0	347.0	11.0	9.0	M6	374.0	380.0	1.50
18892-2-4037	330	440.0	80.0	369.0	11.0	9.0	M6	408.0	404.0	1.50
18900-2-4037	350	460.0	80.0	390.0	12.0	9.0	M6	422.0	442.0	1.50
18930-2-4037	400	528.0	96.0	419.0	12.0	9.0	M8	500.0	504.0	1.50
18929-2-4037	420	544.0	96.0	447.0	12.0	9.0	M8	500.0	520.0	1.50
64000-2-4037	450 (1)	607.0	100.0	465.0	14.0	11.0	M8	560.0	578.0	1.50

subject to alterations

(1) For mounting the axial fan, use guard grille 63978-2-4039

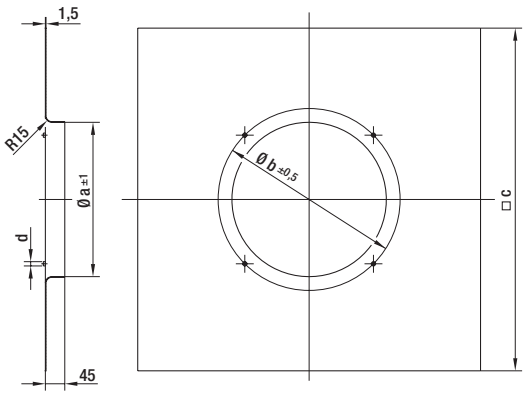

– **Material:** Sheet steel, pre-galvanised

Square wall rings with short nozzle for S series axial fans

Part no.	Size	a	b	c	d
35222-2-4037	350	358.0	422.0	795.0	M6
35223-2-4037	400	400.0	468.0	840.0	M8
35224-2-4037	420	426.0	500.0	850.0	M8
35225-2-4037	450	452.0	515.0	850.0	M8

subject to alterations

Wall rings

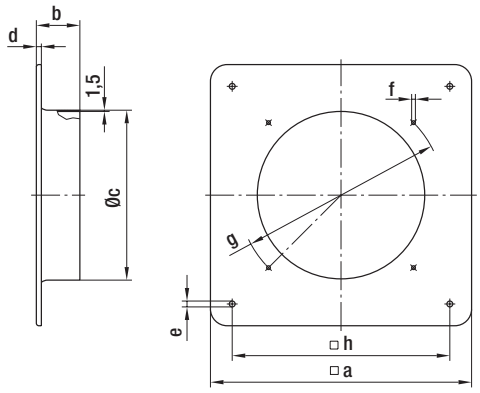

– **Material:** Sheet steel, pre-galvanised and coated in black plastic

Square wall rings with long nozzle for axial fans

Part no.	Size	a	b	c	d	e	f	g	h
18918-2-4037	200	312.0	52.0	203.0	6.0	7.0	4.5	245.0	260.0
37701-2-4037	250 (S series)	370.0	56.0	260.0	6.0	7.0	4.5	290.0	320.0
18933-2-4037	250 (A series)	370.0	55.0	257.0	6.0	7.0	4.5	290.0	320.0
18924-2-4037	300	430.0	80.0	326.0	11.0	9.0	4.5	360.0	380.0
18903-2-4037	315	430.0	72.5	345.0	11.0	9.0	M6	375.0	380.0
18901-2-4037	350	485.0	80.0	388.0	12.0	9.0	M6	422.0	435.0
64005-2-4037	400	540.0	98.0	417.0	12.0	9.0	M8	500.0	490.0
64006-2-4037	420 (1)	576.0	94.0	439.0	14.0	11.0	M8	560.0	535.0
64007-2-4037	450 (1)	576.0	100.0	465.0	14.0	11.0	M8	560.0	535.0

subject to alterations

(1) For mounting the axial fan, use guard grille 63978-2-4039

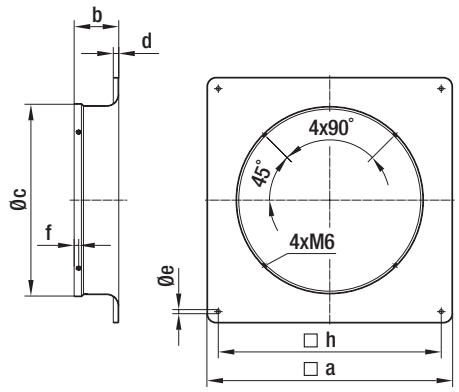

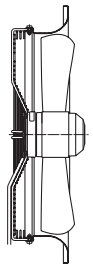

Typical installation

– **Material:** Sheet steel, pre-galvanised and coated in black plastic
– **Guard grilles:** See p. 364
– **Comment:** Contact us for article numbers for complete fans.

Square wall rings with long nozzle for S series axial fans (for nozzle-side mounting)

Part no.	Size	a	b	c	d	e	f	h
64020-2-4037	400	540.0	98.0	409.0	12.0	9.0	10.0	490.0
64001-2-4037	450	576.0	100.0	463.0	14.0	11.0	10.0	535.0

subject to alterations

Connection leads

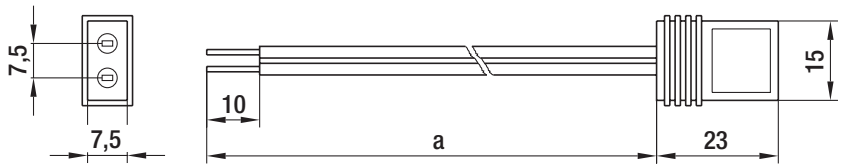

– **Plug terminal:** 2.8 x 0.5 mm

Connection lines for axial compact fan (with plug terminal)

Part no.	Size	a
01434-4-6711	142 / 143	610
01477-4-6711	142 / 143	1000
01505-4-6711	142 / 143	2000

subject to alterations

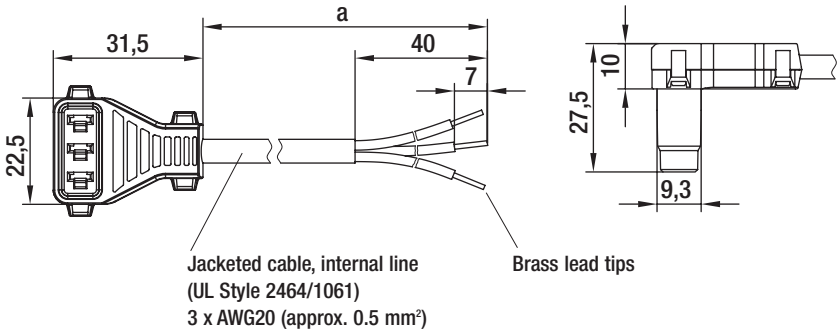

– **Design:** Cable conforms to UL standards, sealed plug

Connection lines for energy-saving motors (ESM)

Part no.	a
10637-4-1040	450
10640-4-1040	600
10638-4-1040	1500
10639-4-1040	32000

subject to alterations

Programming device

for energy-saving motors (ESM)

- **Description:** Programming unit for setting 2 possible speeds via the USB port of a PC.
- **System requirements:** Windows 2000 / XP
- **Delivery scope:** Programming unit
  Supply plug unit
  USB connection line
  Motor connecting cable
  Programming software
- **Type of protection:** IP 20
- **Protection class:** III

Nominal data	Perm. amb. temp.	Perm. storage temp.
Type	**°C**	**°C**
CBC 000-AC02 -02	0 to +45	-20 to +65

subject to alterations

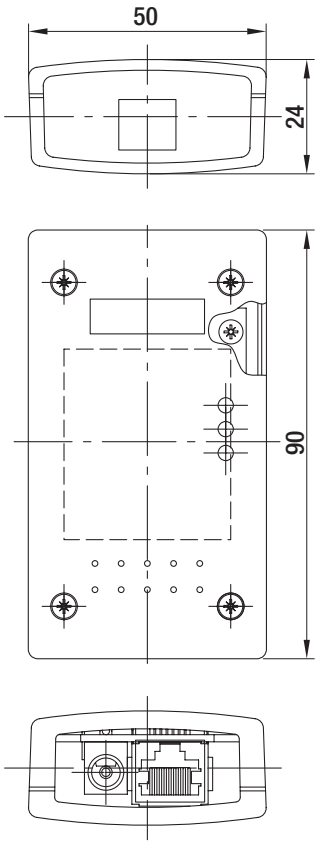

Connection leads

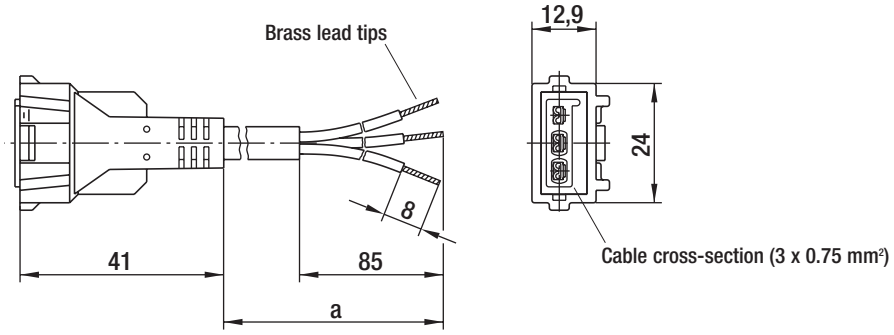

Connection lines for Q-motors (plug terminal design)

Part no.	a
79572-4-6711	420
79573-4-6711	970
79574-4-6711	1470
79575-4-6711	1970
79576-4-6711	2470
79577-4-6711	2970
79578-4-6711	3470
79579-4-6711	3970
79580-4-6711	4470
62402-4-6711	4970

subject to alterations

Axial impellers

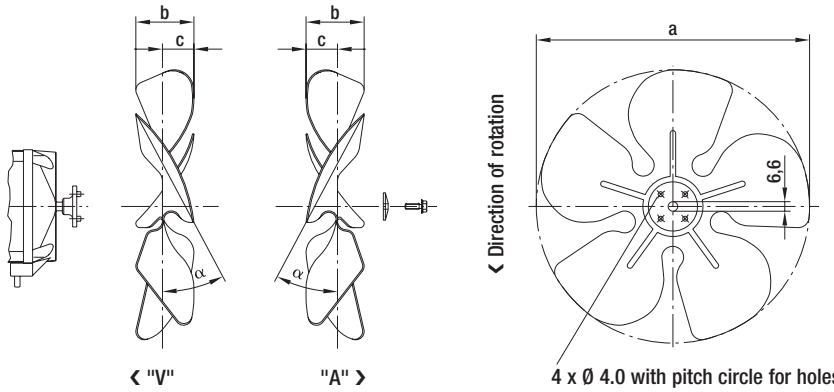

❮ "V" "A" ❯

4 x Ø 4.0 with pitch circle for holes Ø 25.4 mm

– **Material:** Sheet aluminium

Axial impeller for Q-motors and energy-saving motors (ESM)

Part no. for direction of air flow "V"	Part no. for direction of air flow "A"	Blade angle α	a	b	c
73801-2-3634	**73761-2-3634**	22° ± 1°30'	154.0	27.5	14.0
73802-2-3634	**73762-2-3634**	28° ± 1°30'	154.0	32.0	16.0
73803-2-3634	**73763-2-3634**	34° ± 1°30'	154.0	37.0	18.0
73804-2-3634	**73764-2-3634**	22° ± 1°30'	172.0	31.0	14.5
73805-2-3634	**73765-2-3634**	28° ± 1°30'	172.0	36.0	17.0
73806-2-3634	**73766-2-3634**	34° ± 1°30'	172.0	42.0	21.0
73807-2-3634	**73767-2-3634**	22° ± 1°30'	200.0	32.0	15.5
73808-2-3634	**73768-2-3634**	28° ± 1°30'	200.0	37.5	18.0
73809-2-3634	**73769-2-3634**	34° ± 1°30'	200.0	45.0	22.0
73810-2-3634	**73770-2-3634**	22° ± 1°30'	230.0	35.0	17.5
73811-2-3634	**73771-2-3634**	28° ± 1°30'	230.0	43.0	21.5
73812-2-3634	**73772-2-3634**	34° ± 1°30'	230.0	50.0	24.0
73813-2-3634	**73773-2-3634**	22° ± 1°30'	254.0	37.0	19.0
73814-2-3634	**73774-2-3634**	28° ± 1°30'	254.0	45.0	23.5
73815-2-3634	**73775-2-3634**	34° ± 1°30'	254.0	52.0	26.0
73816-2-3634	**73776-2-3634**	22° ± 1°30'	300.0	43.0	21.5
73817-2-3634	**73777-2-3634**	28° ± 1°30'	300.0	53.5	26.5
73818-2-3634	**73778-2-3634**	34° ± 1°30'	300.0	61.0	30.0

subject to alterations

Guard grille

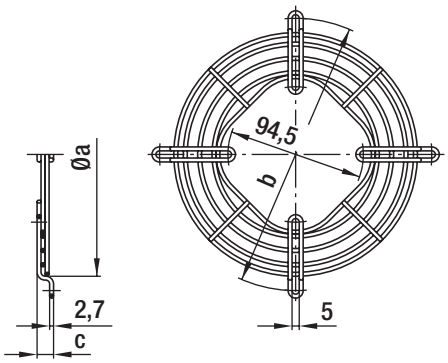

– **Material:** Steel, galvanized and blue chromated

Guard grille for Q-motors and energy-saving motors (ESM)

Part no.	Size	Max. blade angle α at "V"	Max. blade angle α at "A"	a	b	c
50967-2-4039	154	34°	34°	170.0	190.0	11.5
50968-2-4039	172	34°	34°	188.0	208.0	11.5
50969-2-4039	200	34°	28°	214.0	236.0	11.5
50970-2-4039	230	28°	28°	246.0	266.0	17.5
50971-2-4039	254	28°	28°	270.0	290.0	17.5
50972-2-4039 (1)	300	—	22°	324.0	344.0	17.5

subject to alterations

(1) When used with M4Q045-EF, blade angles up to 34° are possible

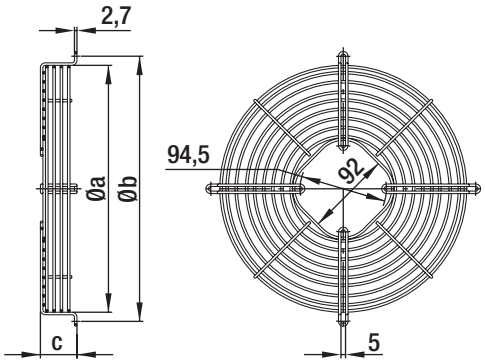

– **Material:** Steel, galvanized and blue chromated

Basket guard grille for Q-motors and energy-saving motors (ESM)

Part no.	Size	Max. blade angle α at "V"	Max. blade angle α at "A"	a	b	c
66309-2-4039	172	34°	34°	188.0	208.0	37.5
66310-2-4039	200	34°	28°	212.0	236.0	37.5
66311-2-4039	230	28°	28°	246.0	266.0	40.0
66312-2-4039	254	28°	28°	270.0	290.0	40.0
66313-2-4039 (1)	300	—	22°	324.0	344.0	46.8

subject to alterations

(1) When used with M4Q045-EF, blade angles up to 34° are possible

Wall rings

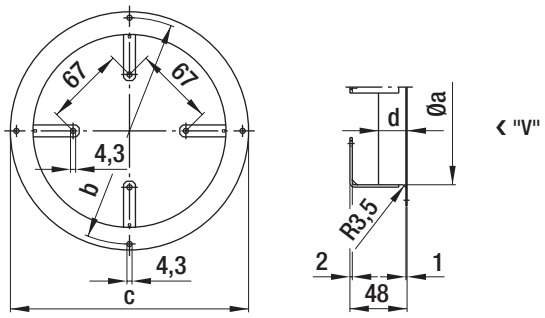

– **Material:** Sheet steel, coated in grey plastic

Wall rings for Q-motors and energy-saving motors (ESM), direction of air flow "V"

Part no.	Size	Max. blade angle α	a	b	c	d
52542-2-4037	154	34°	164.0	190.0	200.0	24.0
52543-2-4037	172	34°	182.0	208.0	223.0	24.0
52544-2-4037	200	34°	210.0	236.0	246.0	24.0
52545-2-4037	230	28°	240.0	266.0	276.0	24.0
52546-2-4037	254	28°	264.0	290.0	300.0	24.0
52547-2-4037 (1)	300	22°	308.0	344.0	356.0	24.0

subject to alterations

(1) When used with M4Q045-EF, blade angles up to 34° are possible

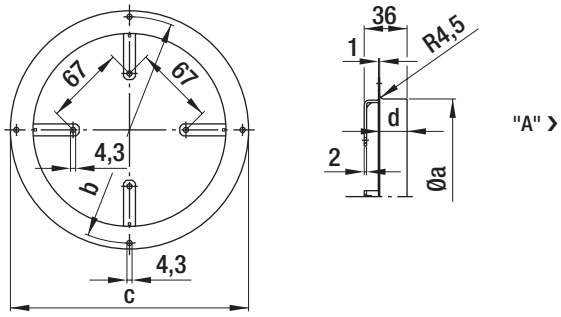

– **Material:** Sheet steel, coated in grey plastic

Wall rings for Q-motors and energy-saving motors (ESM), direction of air flow "A"

Part no.	Size	Max. blade angle α	a	b	c	d
52550-2-4037	154	34°	162.0	190.0	200.0	24.0
52551-2-4037	172	34°	180.0	208.0	223.0	24.0
52552-2-4037	200	28°	208.0	236.0	246.0	24.0
52553-2-4037	230	28°	238.0	266.0	276.0	24.0
52554-2-4037	254	28°	262.0	290.0	300.0	24.0
52555-2-4037 (1)	300	22°	308.0	344.0	356.0	24.0

subject to alterations

(1) When used with M4Q045-EF, blade angles up to 34° are possible

Mounting bracket

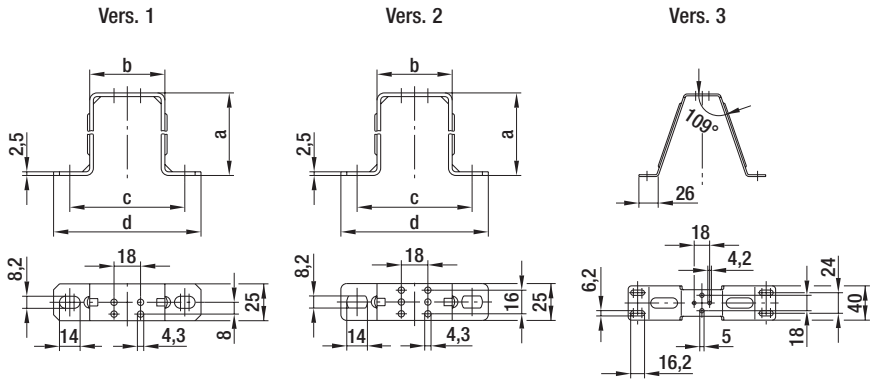

– **Material:** Sheet steel, galvanized and blue chromated

Mounting bracket for Q-motors (foot measure 18 mm)

Part no.	Size	Vers.	a	b	c	d	Suitable Q-motor
51025-2-4053	172	1	56.0	51.0	78.0	100.0	M4Q045-BD01-**
51028-2-4053	200	1	67.0	51.0	78.0	100.0	M4Q045-BD01-**, M4Q045-CA01-**
51026-2-4053	230	1	74.5	51.0	78.0	100.0	M4Q045-CA01-**, M4Q045-CA03-**
51027-2-4053	254	2	85.5	51.0	78.0	100.0	M4Q045-CA03-**, M4Q045-CF01-**, M4Q045-DA01-**
51014-2-4053	300	3	112.0	—	150.0	172.0	M4Q045-DA01-**, M4Q045-DA05-**, M4Q045-EA01-**, M4Q045-EF01-**

subject to alterations

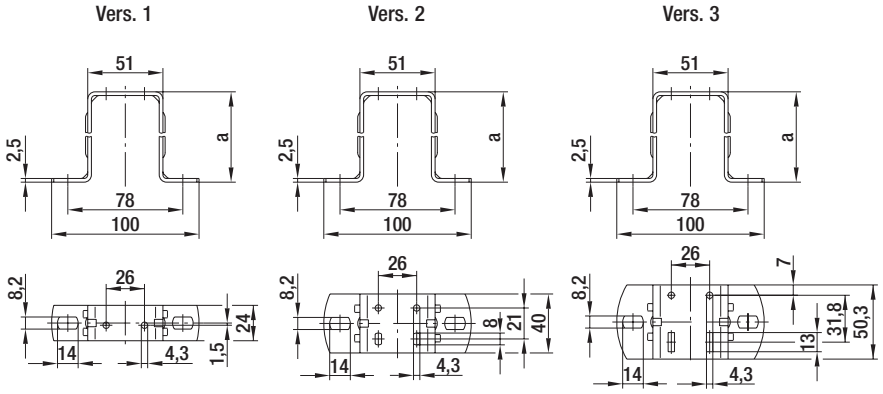

– **Material:** Sheet steel, galvanized and blue chromated

Mounting bracket for Q-motors (foot measure 26 mm)

Part no.	Size	Vers.	a	Suitable Q-motor
71881-2-4053	154	1	39.0	M4Q045-BD01-**
71882-2-4053	172	1	52.0	M4Q045-BD01-**
71883-2-4053	200	1	72.0	M4Q045-BD01-**, M4Q045-CA01-**
	230	1	72.0	M4Q045-CA01-**, M4Q045-CA03-**
71884-2-4053	254	1	84.0	M4Q045-CA03-**, M4Q045-CF01-**
71885-2-4053	254	2	84.0	M4Q045-DA01-**
71886-2-4053	300	2	109.0	M4Q045-DA01-**, M4Q045-DA05-**
71887-2-4053	300	3	109.0	M4Q045-EA01-**, M4Q045-EF01-**

subject to alterations

Mounting angles, terminal boxes

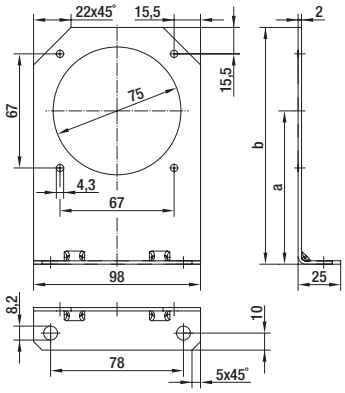

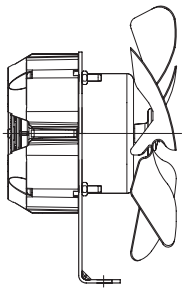

– **Material:** Sheet steel, hot-galvanised

Mounting angle for energy-saving motors (ESM)

Part no.	Size	Max. blade angle α at "V"	Max. blade angle α at "A"	a	b
63500-2-4060	154 / 172	34°	34°	103.0	152.0
63501-2-4060	200	34°	28°	123.0	172.0
63502-2-4060	230 / 254	28°	28°	135.0	184.0

subject to alterations

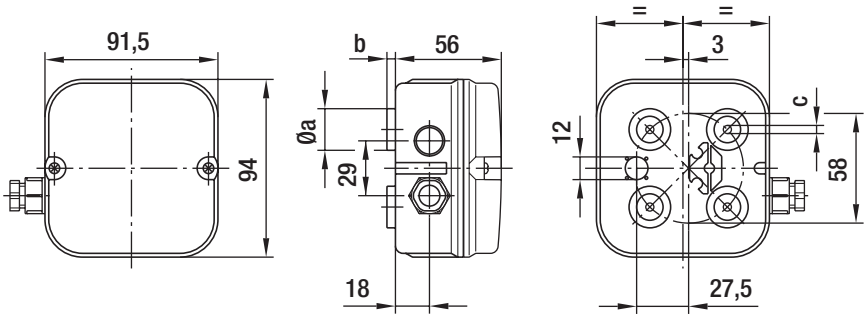

– **Material:** ABS
– **Description:** Two-piece terminal box for AC motors of size 068 or 074, terminal strip with 4- or 7-pole.
Suitable for installation of capacitor with 10 µF max.
– **Type of protection:** IP 54

Terminal box

Part no.	AC motor	a	b	c
64442-1-7612	068 (4 poles)	22.0	5.0	4.3
64444-1-7612	068 (7 poles)	22.0	5.0	4.3
64443-1-7612	074 (4 poles)	12x14.5	10.5	5.5
64445-1-7612	074 (7 poles)	12x14.5	10.5	5.5

subject to alterations

Capacitors

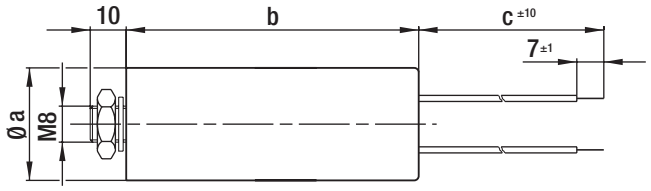

- **Material:** Housing made of thermoplastic resin
- **Connection line:** Multi-lead PVC cable 0.5 mm² with brass lead tips
- **Approval:** VDE according to DIN EN 60252 (VDE 0560/8)
- **Calculated life time:**
  400 V; -25 to +85°C; 30,000 hrs; class A
  450 V; -25 to +85°C; 10,000 hrs; class B

MKP motor capacitors (without fuse)

Part no.	Capacity	a	b (max.)	c
02100-4-7320	1.0 µF	25-28	58.0	235.0
99282-4-7320	1.5 µF	25-28	58.0	235.0
99283-4-7320	2.0 µF	25-28	58.0	235.0
02103-4-7320	2.5 µF	25-28	70.0	235.0
68462-4-7320	3.0 µF	25-28	70.0	235.0
99284-4-7320	4.0 µF	28-32	58.0	235.0
02101-4-7320	5.0 µF	30-36	70.0	235.0
99285-4-7320	6.0 µF	30-36	70.0	235.0
66788-4-7320	7.0 µF	30-36	72.0	100.0
99286-4-7320	8.0 µF	35-40	72.0	235.0
99287-4-7320	10.0 µF	35-40	72.0	200.0
66786-4-7320	12.0 µF	40.0	72.0	100.0
30457-4-7320	14.0 µF	40-45	92.0	150.0
50090-4-7320	16.0 µF	35-40	95.0	100.0
90034-4-7320	20.0 µF	40.0	95.0	235.0
90025-4-7320	25.0 µF	40.0	120.0	235.0

subject to alterations

Capacitors

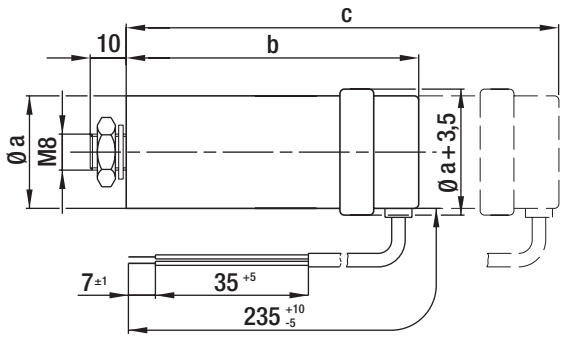

- **Material:** Plastic cap, aluminium cup
- **Designation:** FPU or P2 according to IEC 252 (non-flammable, non-explosive, circuit-breaking)
- **Approval:** VDE according to DIN EN 60252 (VDE 0560/8)
- **Calculated life time:**
  420 V; -25 to +85°C; 30,000 hrs; class A
  470 V; -25 to +85°C; 10,000 hrs; class B
  500 V; -25 to +85°C; 3,000 hrs; class C

MKP motor capacitors FPU or P2 (with fuse)

Part no.	Capacity	a	b (max.)	c (max.)
02151-4-7320	1.0 µF	25-30	77.0	92.0
02155-4-7320	1.5 µF	25.0	77.0	92.0
02156-4-7320	2.0 µF	25.0	77.0	92.0
02159-4-7320	2.5 µF	30.0	71.0	92.0
02160-4-7320	3.0 µF	30.0	71.0	92.0
02161-4-7320	4.0 µF	25-30	104.0	135.0
02162-4-7320	5.0 µF	25-30	104.0	113.0
02163-4-7320	6.0 µF	30.0	101.0	110.0
02164-4-7320	7.0 µF	30-35	101.0	110.0
02165-4-7320	8.0 µF	30-35	102.0	111.0
02166-4-7320	10.0 µF	35.0	96.0	110.0
02167-4-7320	12.0 µF	35.0	96.0	110.0
90026-4-7320	14.0 µF	40.0	130.0	139.0
02168-4-7320	16.0 µF	40.0	96.0	130.0
02169-4-7320	20.0 µF	40.0	116.0	130.0
02170-4-7320	25.0 µF	40-45	116.0	130.0

subject to alterations

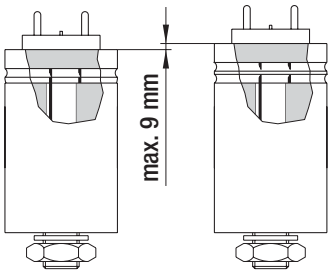

- **Pull-off protector:** The housing expands by max. 9 mm. The protector responds to overload by the generated excess pressure snapping off the internal lead in a predetermined breaking point.
- **Mounting:** c is the overall dimension of the capacitor which has to be taken into account when mounting the part. The capacitor design, however, depends on the manufacturer. The expansion (9 mm) is either added to dimension b, or it is already integrated in the capacitor.

Speed setting device, 3-phase (with 5 steps)

for wall assembly

- **Technical features:** Input for TOP
- **Voltage steps:** 3~ 400 / 280 / 230 / 180 / 140 VAC
- **Type of protection:** IP 20 (with vertical installation)

Nominal data		Nominal voltage	Frequency	Current draw	Mass
Type		**VAC**	**Hz**	**A**	**kg**
TCD 020-AA01 -05	3~	400	50/60	2.0	9.5
TCD 040-AA01 -05	3~	400	50/60	4.0	13.9
TCD 070-AA01 -05	3~	400	50/60	7.0	19.7

subject to alterations

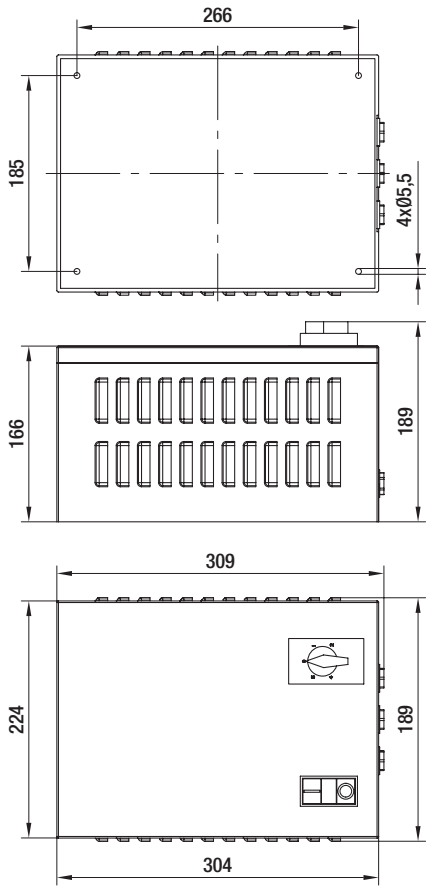

ebmpapst

Speed setting device, single-phase (with 5 steps)

for wall assembly

- **Technical features:** Input for TOP
- **Voltage steps:** 1~ 230 / 160 / 145 / 130 / 105 VAC
- **Type of protection:** IP 40

Nominal data		Nominal voltage	Frequency	Current draw	Mass
Type		**VAC**	**Hz**	**A**	**kg**
TCE 021-AA01 -05	1~	230	50/60	2.1	3.6
TCE 040-AA01 -05	1~	230	50/60	4.0	4.8
TCE 075-AA01 -05	1~	230	50/60	7.5	6.5

subject to alterations

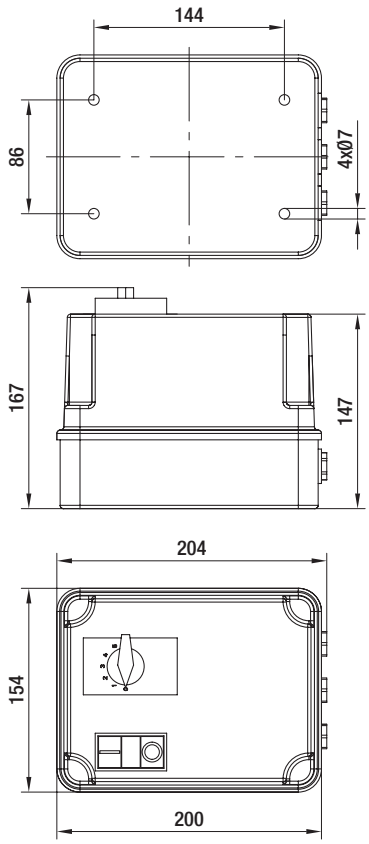

Motor protection switch, 3-phase

for assembly inside a cabinet

– **Technical features:** Input for TOP

Nominal data		Nominal voltage	Frequency	Current draw	Mass	
Type		**VAC**	**Hz**	**A**	**kg**	**Auxiliary contactor**
TPD 250-AB01 -01	3~	400	50/60	25.0	0.3	Without auxiliary contactor
TPD 250-AB01 -02	3~	400	50/60	25.0	0.3	With break contact
TPD 250-AB01 -03	3~	400	50/60	25.0	0.3	With make contact

subject to alterations

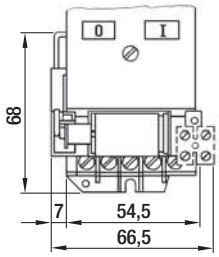

– **Electr. connection:**

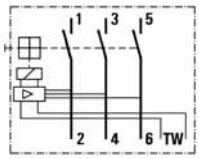

ebmpapst

Motor protection switch, single-phase

for assembly inside a cabinet

– **Technical features:** Input for TOP

Nominal data

Type		Nominal voltage VAC	Frequency Hz	Current draw A	Mass kg	Auxiliary contactor
TPE 100-AB01 -01	3~	230	50/60	10.0	0.3	Without auxiliary contactor
TPE 100-AB01 -02	3~	230	50/60	10.0	0.3	With break contact
TPE 100-AB01 -03	3~	230	50/60	10.0	0.3	With make contact

subject to alterations

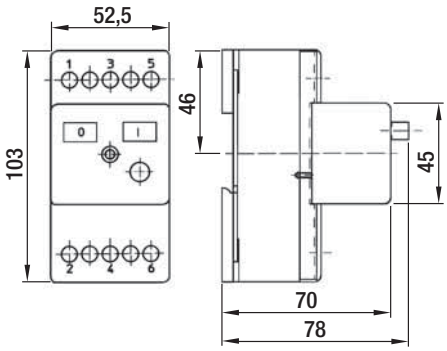

– **Electr. connection:**

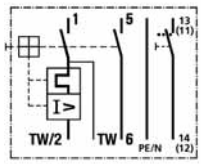

Motor-protection switch, single phase and three-phase

for wall assembly

- **Technical features:** Input for TOP
- **Type of protection:** IP 55

Nominal data		Nominal voltage	Frequency	Current draw	Mass	
Type		**VAC**	**Hz**	**A**	**kg**	**Auxiliary contactor**
TPD 250-AA01 -01	3~	400	50/60	25.0	0.6	Without auxiliary contactor
TPD 250-AA01 -02	3~	400	50/60	25.0	0.6	With break contact
TPD 250-AA01 -03	3~	400	50/60	25.0	0.6	With make contact
TPE 100-AA01 -01	1~	230	50/60	10.0	0.6	Without auxiliary contactor
TPE 100-AA01 -02	1~	230	50/60	10.0	0.6	With break contact
TPE 100-AA01 -03	1~	230	50/60	10.0	0.6	With make contact

subject to alterations

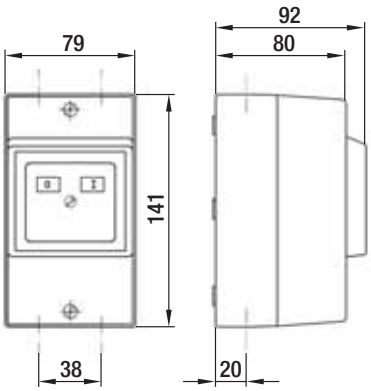

- **Electr. connection, three-phase:**

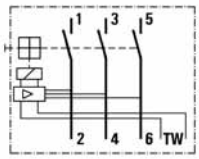

- **Electr. connection, single-phase:**

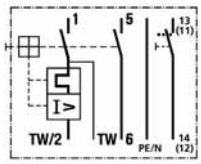

ebmpapst

Star-delta switch / repair switch

Third-party accessories from Möller Electric GmbH

for wall installation

For more information: www.moeller.net

Star-delta switch (available from Möller Electric GmbH)

Designation	Installation
T0-4-8410/I1	Wall installation
T0-4-8410/E	Cabinet installation

subject to alterations

for wall installation

For more information: www.moeller.net

Repair switch, lockable (available from Möller Electric GmbH)

Designation	Installation
T0-2-8900/I1/SVB-SW	Wall installation
T0-2-8900/EA/SVB-SW	Cabinet installation

subject to alterations

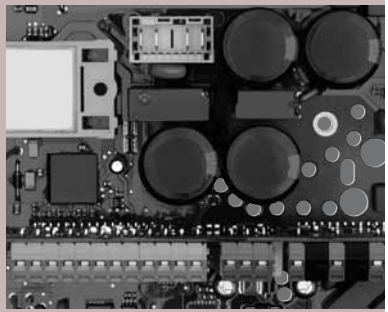

Technology

Technical parameters & scope	392
Impellers	396
Motors	410
Control technology	414

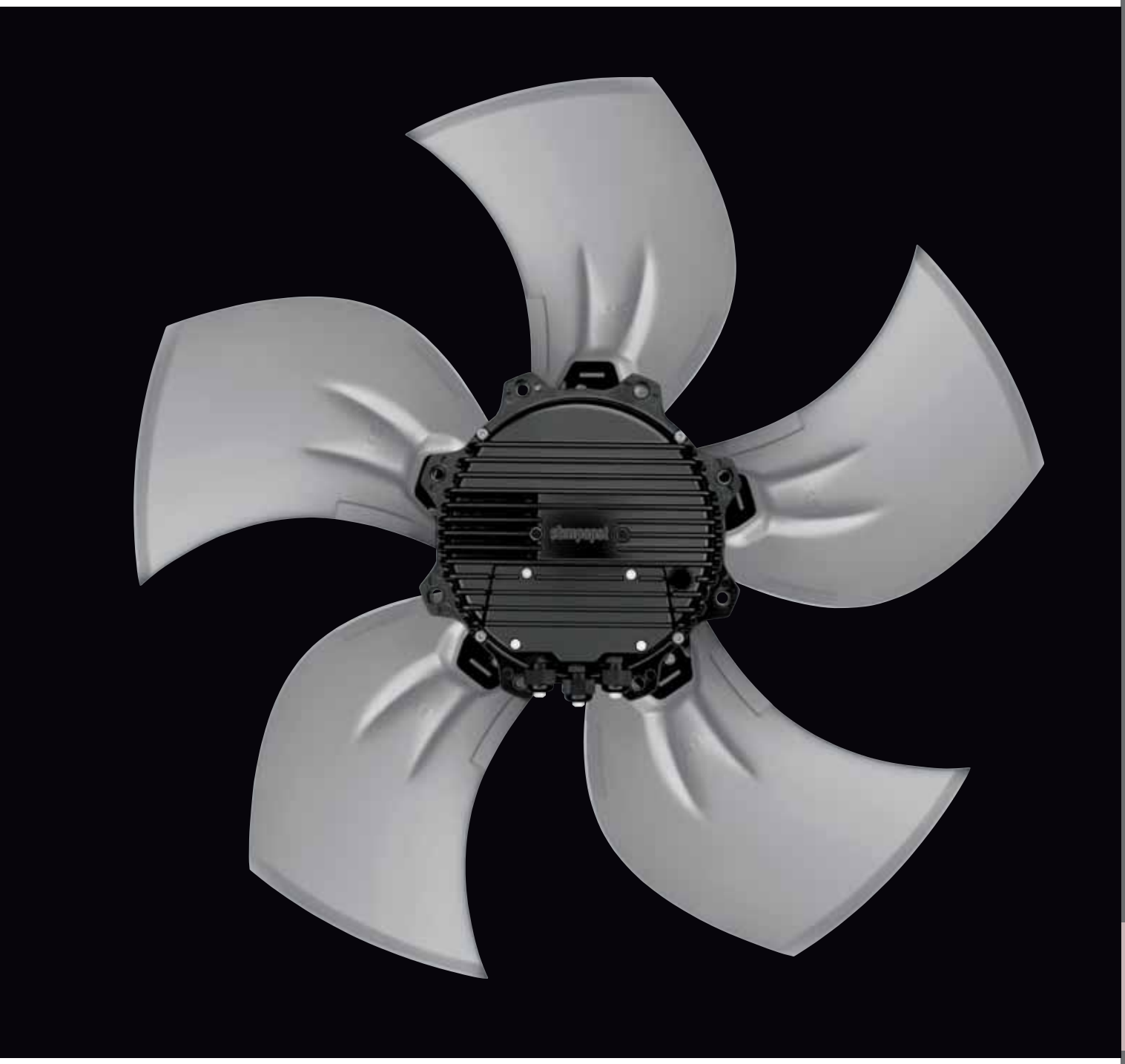

Technical parameters & scope

High standards for all ebm-papst products

Here at ebm-papst, we constantly strive to further improve our products in order to be able to offer you the best possible product for your application. Careful monitoring of the market ensures that technical innovations are reflected in the improvements of our products.
Based on the technical parameters listed below and the ambience you want our product to operate in, we here at ebm-papst can always work out the best solution for your specific application.

General performance parameters

Any deviations from the technical data and parameters described here are listed on the product-specific data sheet.

Type of protection

The type of protection is specified in the product-specific data sheets.

Insulation class

The insulation class is specified in the product-specific data sheets.

Mounting position

The mounting position is specified in the product-specific data sheets.

Condensate discharge holes

Information on the condensate discharge holes is provided in the product-specific data sheets.

Mode of operation

The mode of operation is specified in the product-specific data sheets.

Protection class

The protection class is specified in the product-specific data sheets.

Service life

The service life of ebm-papst products depends on two major factors:

- The service life of the insulation system
- The service life of the bearing system

The service life of the insulation system mainly depends on voltage level, temperature and ambient conditions, such as humidity and condensation.
The service life of the bearing system depends mainly on the thermal load on the bearing.
The majority of our products use maintenance-free ball bearings for any mounting position possible. As an option, sleeve bearings can be used, which is indicated on the product-specific data sheet wherever applicable.
The service life L10 of the ball bearings can be taken as approx. 40,000 operating hours at an ambient temperature of 40 °C, yet this estimate can vary according to the actual ambient conditions.
We will gladly provide you with a lifetime calculation taking into account your specific operating conditions.

Motor protection / thermal protection

Information on motor protection and thermal protection is provided in the product-specific data sheets.
Depending on motor type and field of application, the following protective features are realised:

- Thermal overload protection (TOP), either in-circuit or external
- PTC with electronic diagnostics
- Impedance protection
- Thermal overload protection (TOP) with electronic diagnostics
- Current limitation via electronics

If an external TOP is connected, the customer has to make sure to connect a conventional trigger device for switching it off.
All fans with 1~ AC voltage are equipped with a TOP that is connected in the winding circuit.
Products without fitted TOP and without protection against improper use, a motor protection complying with the valid standards has to be installed.

Left: Endurance test room
Middle: Shock test
Right: Chamber test rig

Mechanical strain / performance parameters

All ebm-papst products are subjected to comprehensive tests complying with the normative specifications. In addition to this, the tests also reflect the vast experience and expertise of ebm-papst.

Vibration test

Vibration tests are carried out in compliance with

– Vibration test in operation according to DIN IEC 68, parts 2-4
– Vibration test at standstill according to DIN IEC 68, parts 2-4

Shock load

Shock load tests are carried out in compliance with

– Shock load according to DIN IEC 68, parts 2-27

Balancing quality

Testing the balancing quality is carried out in compliance with

– Residual imbalance according to DIN ISO 1940
– Standard balancing quality level G 6.3

Should you require a higher balancing quality level for your specific application, please let us know and specify this when ordering your product.

Chemo-physical strain / performance parameters

Should you have questions about chemo-physical strain, please direct them to your ebm-papst contact.

Fields of application, industries and applications

Our products are used in various industries and applications:
Ventilation, air-conditioning and refrigeration technology, clean room technology, automotive and rail technology, medical and laboratory technology, electronics, computer and office technology, telecommunications, household appliances, heating, machines and plants, drive engineering.
Our products are not designed for use in the aviation and aerospace industry!

Legal and normative directives

The products described in this catalogue are designed, developed and produced in keeping with the standards in place for the relevant product and, if known, the conditions governing the relevant fields of application.

Standards

Information on standards is provided in the product-specific data sheets.

EMC

Information on EMC standards is provided in the product-specific data sheets.
Complying with the EMC standards has to be established on the final appliance, as different mounting situations can result in changed EMC properties.

Leakage current

Information on the leakage current is provided in the product-specific data sheets.
The measurement takes place according to Fig. D.1 according to IEC 60990, Fig. 4.

Approvals

In case you require a specific approval for your ebm-papst product (VDE, UL, GOST, CCC, CSA, etc.) please let us know.
Most of our products can be supplied with the relevant approval.
Information on existing approvals is provided in the product-specific data sheets.

Air performance measurements

All air performance measurements are carried out on inlet-side chamber test rigs in conformity with the requirements of DIN 24163 and ISO 5801.
The fans being tested are installed on the measuring chamber at free air intake and discharge (installation type A according to DIN 24163 Part 1) and are operated at nominal voltage (for AC, also at nominal frequency) without additional attachments such as the guard grille.
As required by the standard, the air performance curves correspond to an air density of 1.2 kg/m^3.

Room for precision noise measuring

Measurement conditions for air and noise measurement

ebm-papst products are measured under the following conditions:

- Axial and centrifugal fans with direction of air flow "V", without guard grille and in the wall ring
- Backward curved centrifugal fans, free-running and with inlet nozzle
- Forward curved single and dual inlet centrifugal fans with housing

Noise measurements

All noise measurements are carried out in low-reflective test rooms with reverberant floor. Thus the ebm-papst acoustic test chambers meet the requirements of precision class 1 according to DIN EN ISO 3745. For noise measurement, the fans being tested are placed in a reverberant wall and operated at nominal voltage (for AC, also at nominal frequency) without additional attachments such as the guard grille.

Sound pressure level and sound level

All noise levels are measured in conformity to DIN 45635 and ISO 3744/3745 according to precision class 2 and specified A-weighted. When the sound pressure level (L_p) is measured, the microphone is on the intake side of the fan being tested, usually at a distance of 1 m on the fan axis.

To measure the sound level (L_W), 10 microphones are distributed over an enveloping surface on the intake side of the fan being tested (see graphic). The sound level measured can be roughly calculated from the sound pressure level by adding 7 dB.

<u>Measurement configuration</u> according to DIN 45635 T38:

● 10 measuring points

$d \geq D$

$h = 1.5d$ to $4.5d$

Measurement area $S = 6d^2 + 7d\ (h + 1.5d)$

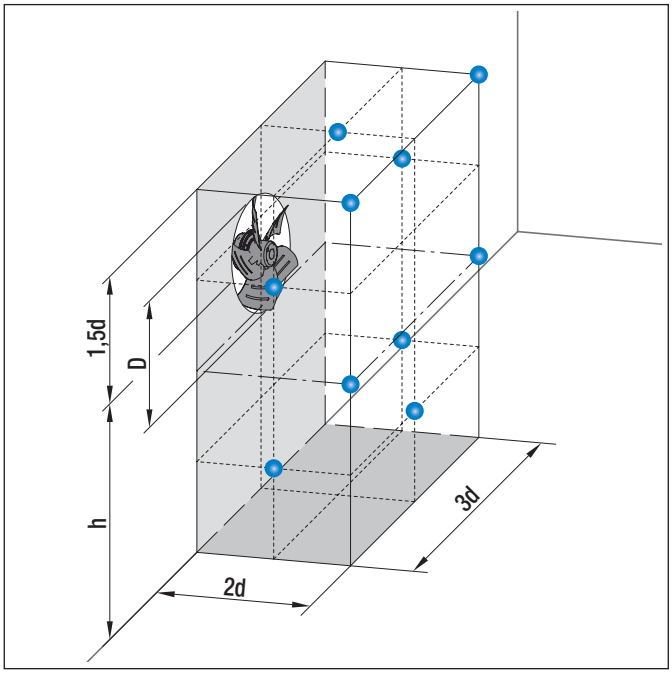

ebmpapst

Curves

Adding multiple noise sources with the same level

Adding 2 noise sources with the same volume results in a level increase of approx. 3 dB. The noise characteristics of multiple identical fans can be determined in advance based on the noise values specified in the data sheet. This is shown in the diagram opposite.

Example: 8 A3G800 axial fans are on a condenser. According to the data sheet, the sound pressure level of a fan is approximately 75 dB(A).

The level increase measured from the diagram is 9 dB. Thus the overall sound level of the installation can be expected to be 84 dB(A).

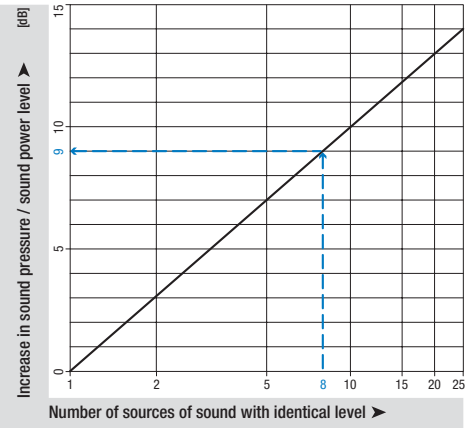

Adding two noise sources with different levels

The acoustic performance of two different fans can be predetermined based on the sound levels given in the data sheet. This is shown in the diagram opposite.

Example: There is an axial fan A3G800 with a sound pressure level of 75 dB(A) at the operating point and an axial fan A3G710 with 71 dB(A) in a ventilation unit. The level difference is 4 dB. The level increase can now be read in the diagram as approx. 1.5 dB. This means that the overall sound level of the unit can be expected to be 76.5 dB(A).

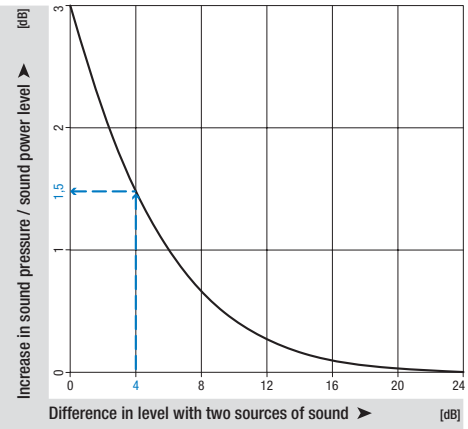

Inverse square laws

The sound level is independent of the distance from the noise source. Conversely, the sound pressure level decreases as distance from the noise source increases. The diagram to the right shows the level decrease expressed in terms of an output measurement at a distance of 1 m from the noise source under far-field conditions.

Example: An axial fan A3G800 has a sound pressure level of 75 db(A) at the operating point. Now, you want to measure the noise characteristics at a distance of 20 m. In the diagram to the right, you can now read a reduction of 26 dB for the 20 m distance.

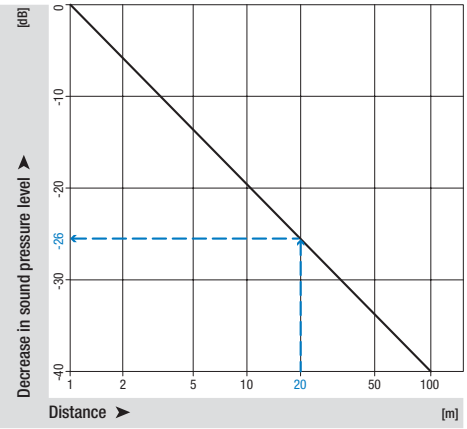

Impellers

Impellers made by ebm-papst

Like pumps and compressors, fans and blowers belong to the category of aerodynamic and fluid work machines. A fan consists of an impeller, a drive motor and a housing for suspension and for guiding the air flow. The blades spaced along the circumference of the impeller are designed in such a way as to cause the flowing work medium to change direction, thus passing on pressure and speed energy.

ebm-papst construction designs

Depending on the geometrical shape of the impeller, there are different construction designs, with their names taken from the main flow direction in the impeller.

The most important designs are:

- Axial fans
- Centrifugal fans with backward curved blades
- Single or dual inlet centrifugal blowers with forward curved blades
- Diagonal (mixed flow) fans (a cross between axial and centrifugal fans)

Relevant fields of application of the various construction designs

The different ebm-papst fan and blower designs correspond to the different fields of application:

- Small back pressures: Axial fans
- High back pressures: Centrifugal fans with backward curved blades and single or dual inlet centrifugal blowers
- Threshold between axial and centrifugal fans: Diagonal fans

Application-specific selection parameters

When selecting an application-specific fan or blower, the main parameters to be taken into account are these:

- Air flow at given back pressure
- Constructional design
- Speed/rpm
- Impeller diameter
- Ambient conditions governing suction and exhaust side

Characteristic curves of the various designs

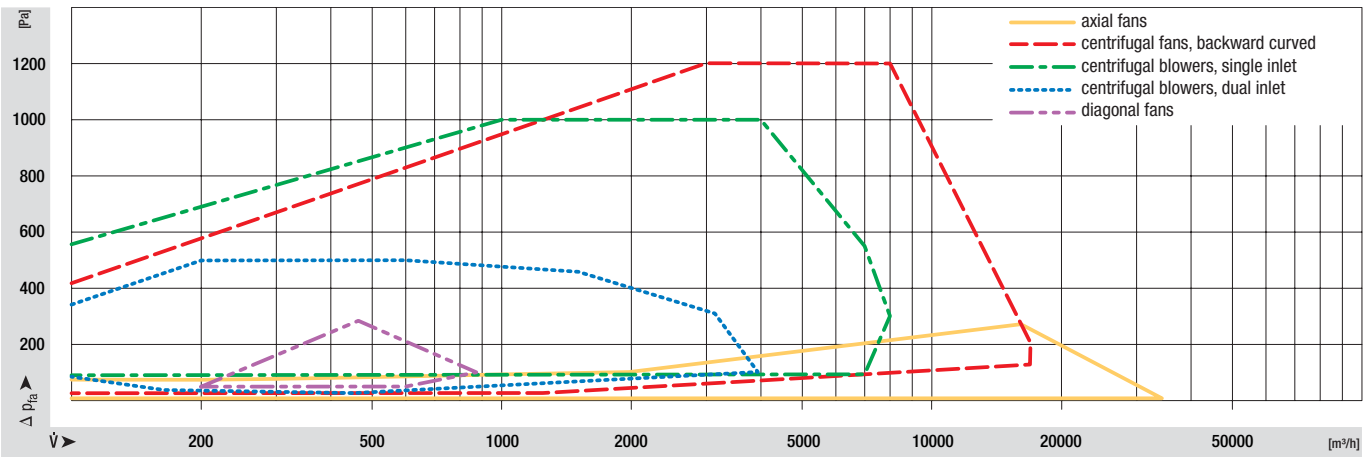

ebmpapst

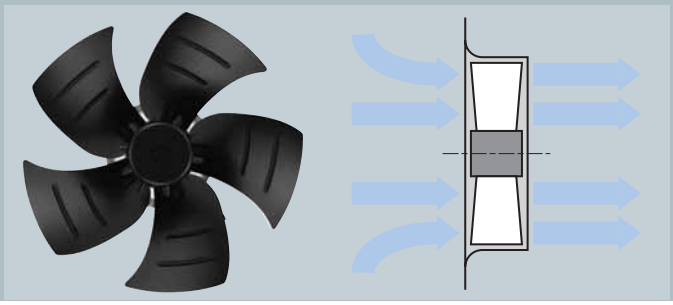

Axial fans

Operating range

To the right of the "saddle" (right part of the air performance curve):

- Maximum efficiency
- Minimal noise

To the left of the "saddle" (left part of the air performance curve):

- Stall area
- Drop in efficiency
- Soaring noise

The optimum operating range of the fan is shaded in green in the curve given here.

Noise / efficiency curve

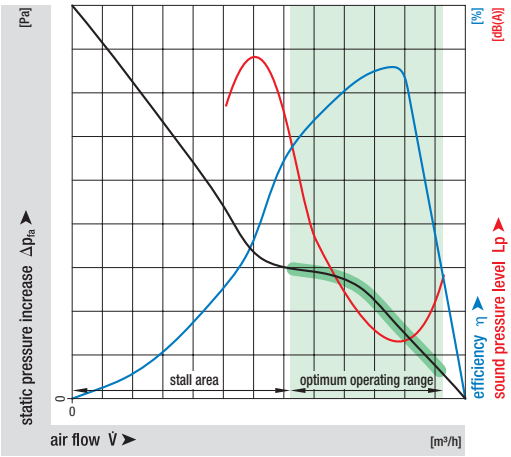

Direction of air flow

The direction of air flow is given as follows:

Direction of air flow "V"

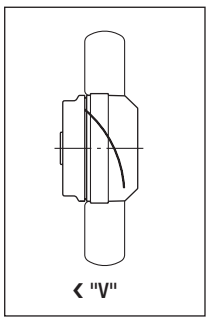

Direction of air flow "A"

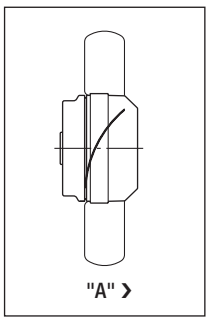

Effects when mounted in wall ring or in the aperture

Mounting the fan in a wall ring can significantly increase the air performance in the operating range.

① Wall ring

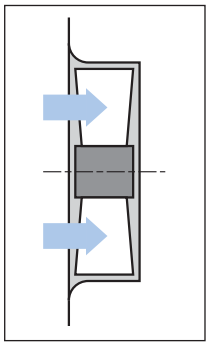

② Aperture

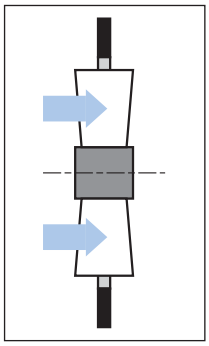

Curve

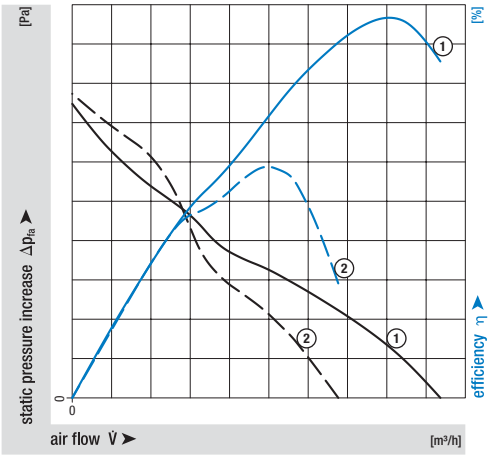

Effects with axial position in the wall ring

Axial position in the wall ring influences air performance and efficiency.

① Projecting on inlet side
x / D = 7 %

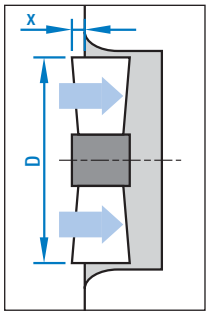

② Flush on inlet side
x / D = 0 %

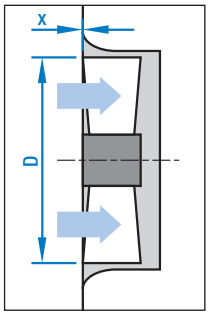

③ Immersed on inlet side
x / D = -7 %

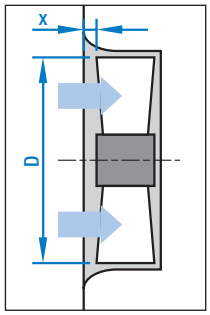

Curve

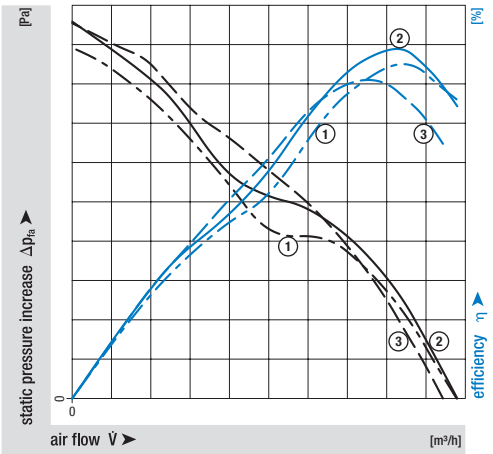

ebmpapst

Effects with guard grilles

Mounting a guard grille reduces the air performance of the axial fan.

① Without guard grille
② With guard grille

Curve

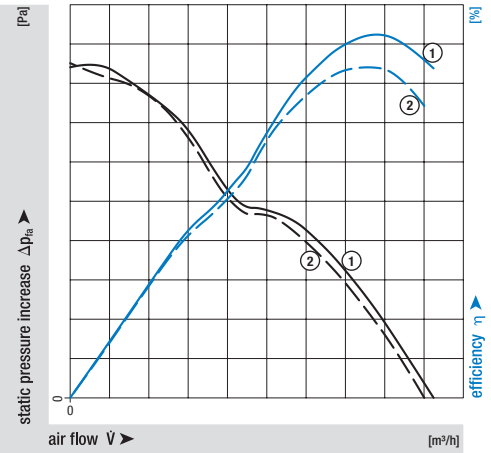

The pressure drop in Pa can be roughly calculated according to the following equation:

$$\Delta p_{GG} = \epsilon_{GG} \cdot 10^{-8} \cdot \dot{V}^2 \qquad \dot{V} \text{ in } [m^3/h]$$

For the guard grilles used at ebm-papst, the correction factor ϵ_{GG} can be used depending on the impeller diameter D from the table to the right.

Diameter D	Correction factor ϵ_{GG}
130	10000
143	6600
180	2550
200	1650
250	650
300	300
315	240
350	150
400	90
450	55
500	35
560	20
630	11
710	6
800	3
910	1.5
990	0.9

Effects of obstructions on the suction or exhaust side

Disturbances or obstructions on the suction or pressure side reduce the air performance of the axial fan.

Obstructions on the inlet side

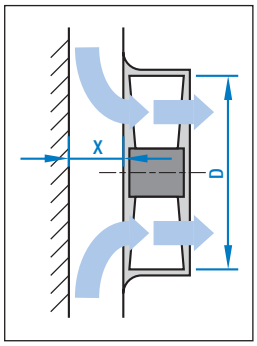

① x / D = ∞
② x / D = 35 %
③ x / D = 18 %
④ x / D = 9 %
⑤ x / D = 5 %

Obstructions on the exhaust side

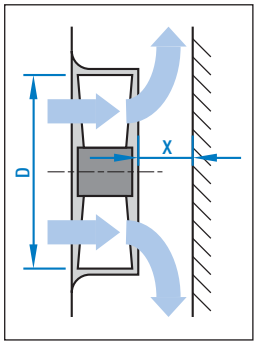

① x / D = ∞
② x / D = 35 %
③ x / D = 18 %
④ x / D = 9 %
⑤ x / D = 5 %

Curve

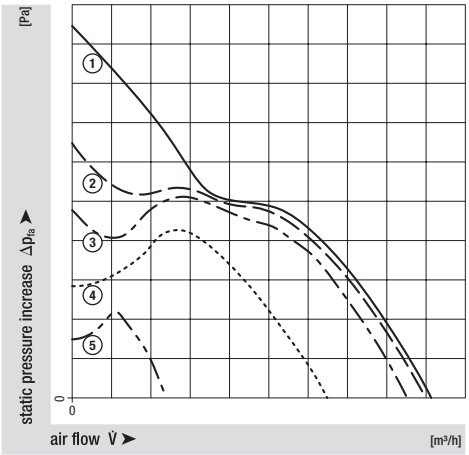

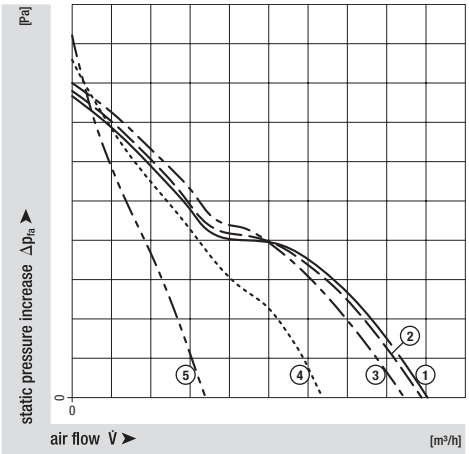

ebmpapst

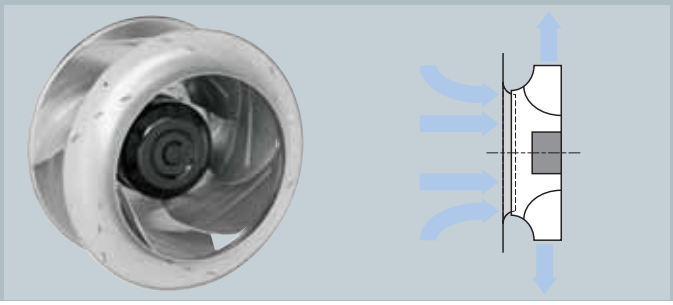

Centrifugal fans with backward curved blades

Operating range

Middle part of air performance curve:

- Maximum efficiency
- Minimal noise

To the right and the left of the middle part of the air performance curve:

- Reduced efficiency
- Increasing noise

The optimum operating range of the fan is shaded in green in the curve given here.

Noise / efficiency curve

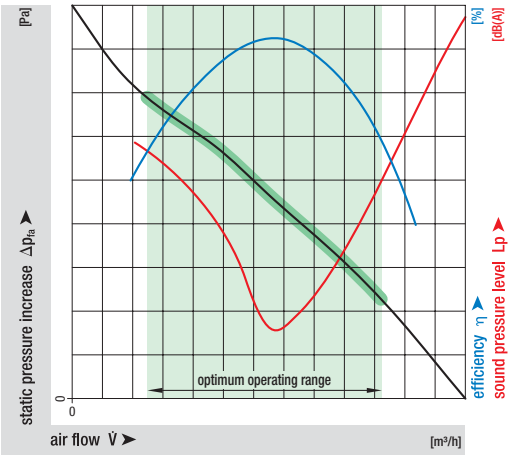

Effects of nozzle gap dimension

The centrifugal air gap between the inlet nozzle and impeller cover plate influences the air performance and efficiency of the centrifugal fan.

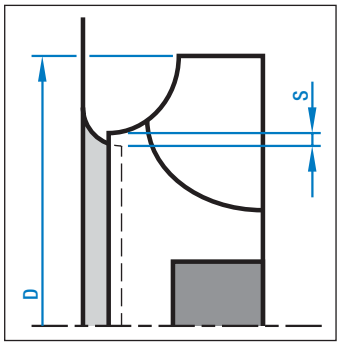

① s / D = 0.4 %
② s / D = 1.0 %
③ s / D = 1.4 %

Curve

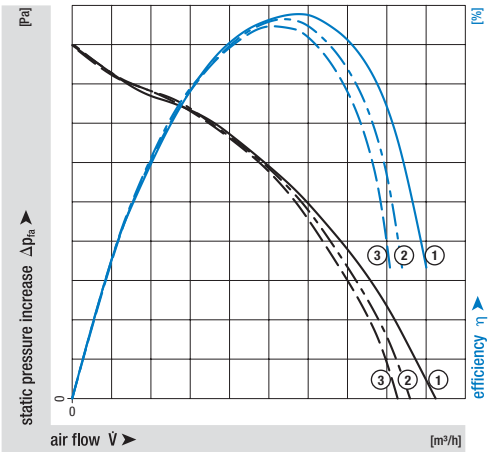

Effects of overlapping dimension

The axial overlap between the inlet nozzle and impeller cover plate influences the air performance and efficiency of a centrifugal fan.

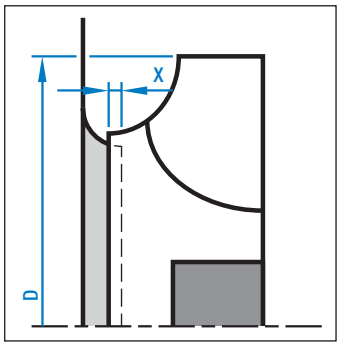

① x / D = 0.6 %
② x / D = 0 %
③ x / D = -0.8 %

Curve

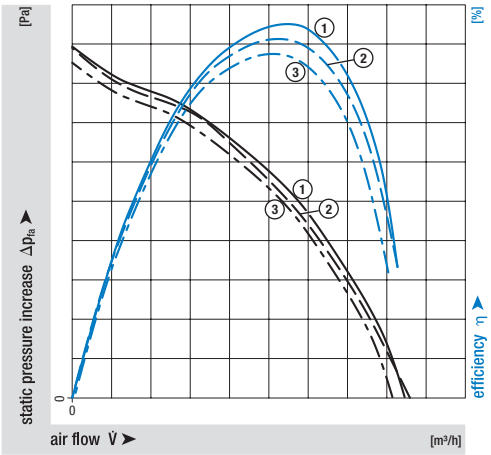

Effects of installation space

When mounting our product in a rectangular box, air performance might be reduced.

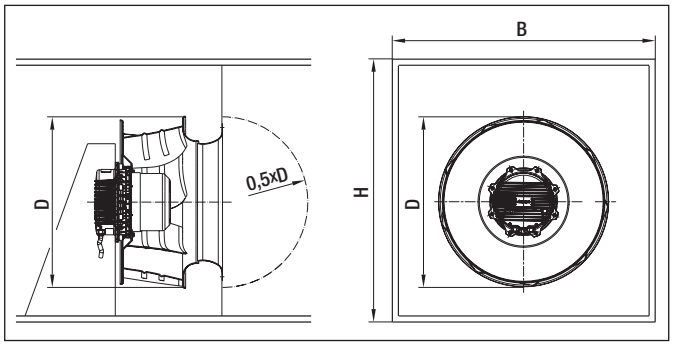

d_h = Hydraulic diameter

Formula: $d_h = 2 \times B \times H / (B + H)$

B = Width of box

H = Height of box

D = Outer diameter of the fan

Curve

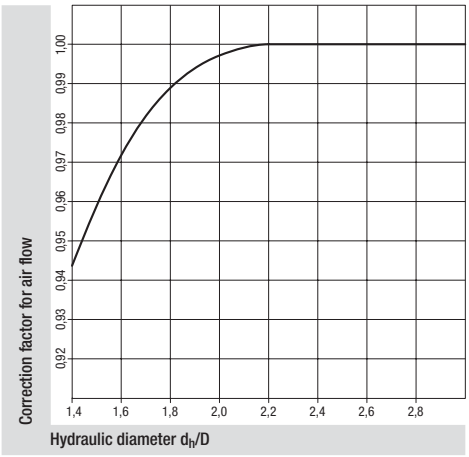

ebmpapst

Air flow measurement for inlet nozzles with pressure-measuring point

The differential pressure approach compares the static pressure before the inlet nozzle with the static pressure inside the inlet nozzle.

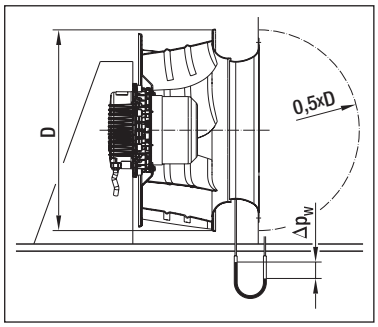

Air flow can be calculated on the basis of the differential pressure (difference in pressure of the static pressures) in keeping with the following equation:

$\dot{V} = k \cdot \sqrt{\Delta p_W}$ $\dot{V}$ in [m³/h] and Δp_W in [Pa]

If constant air flow control is used, then the nozzle pressure has to be kept constant: $\Delta p_W = \dot{V}^2 : k^2$

k takes into account the specific nozzle characteristics.

One or four pressure measuring points are spaced along the circumference of the inlet nozzle. Connection on the customer side is accomplished via a premounted T tube connector. This tube connector is suited for pneumatic hoses with an internal diameter of 4 mm.

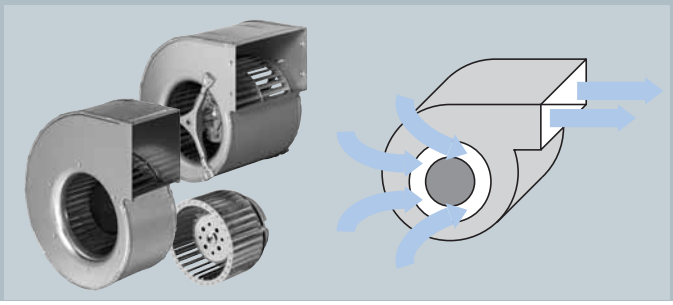

Single and dual inlet centrifugal blowers with forward curved blades

The forward curved centrifugal impeller must always be operated inside a scroll housing.

A dual inlet centrifugal blower shows the same behaviour as two single inlet blowers operated in parallel: with size, speed and pressure being identical, double the air flow is achieved.

Operating range

Middle part of air performance curve:

- Maximum efficiency
- Minimal noise
- Higher performance density than with the backward curved centrifugal fan

To the right and the left of the middle part of the air performance curve:

- Reduced efficiency
- Increasing noise

The optimum operating range of the fan is shaded in green in the curve given here.

Noise / efficiency curve

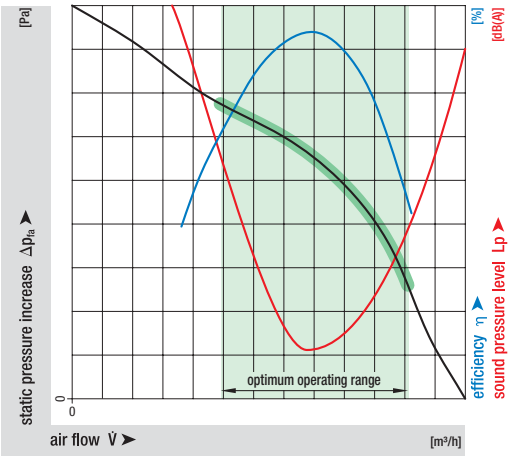

Dimensioning of the scroll

The dimensions of a typical scroll can be calculated with the following formulae, subject to the impeller diameter D:

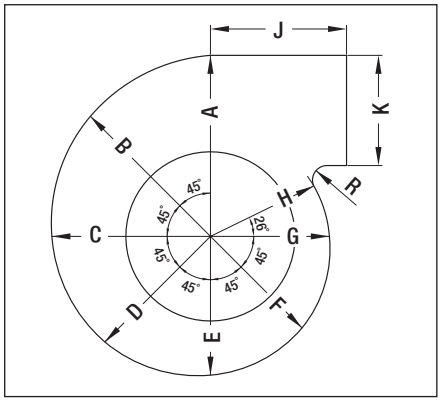

A = 1.062 · D
B = 0.992 · D
C = 0.922 · D
D = 0.853 · D
E = 0.784 · D
F = 0.715 · D
G = 0.646 · D
H = 0.612 · D
J = 0.720 · D
K = 0.689 · D
R = 0.073 · D

Adjusting the dimensions to diminished mounting spaces is possible.

Effects of step diffusers

A diffuser mounted on the exhaust side with connected exhaust tunnel increases air performance and efficiency of the centrifugal blower.

① without step diffuser

② with step diffuser

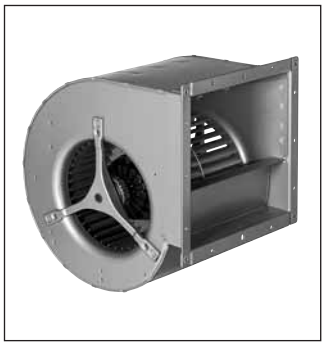

Curve

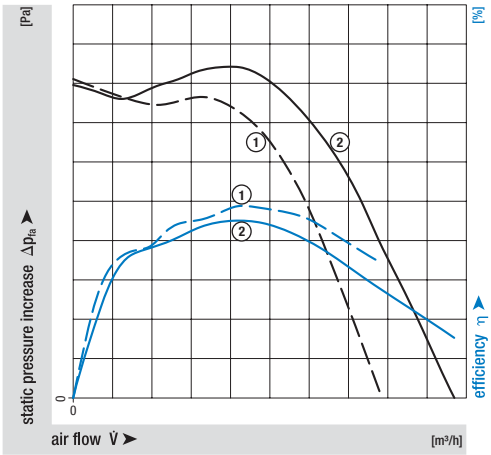

Effects of obstructions on the intake side

Obstructions on the air intake side reduce the air performance of the centrifugal blower.

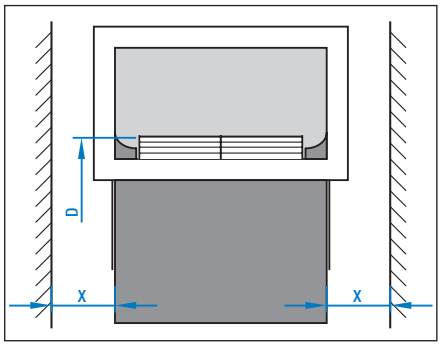

① x / D = ∞
② x / D = 30 %
③ x / D = 23 %
④ x / D = 15 %
⑤ x / D = 7.5 %

Curve

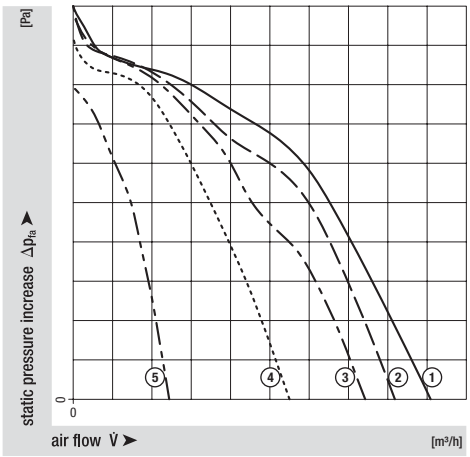

Effects caused by obstructions on the inlet side for constant air flow EC centrifugal blowers

Constant air flow is attained with unimpaired inflow only.
An obstructed (e. g. asymmetrical or partially blocked) air flow can have a significant effect on the curve behaviour and cause large deviations from a constant air flow curve.

Examples of obstructed inflows

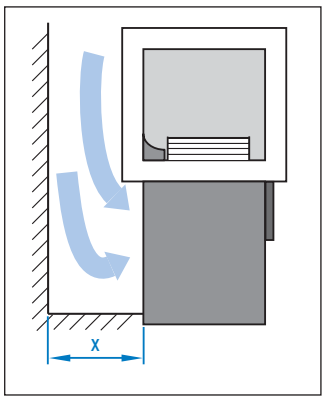

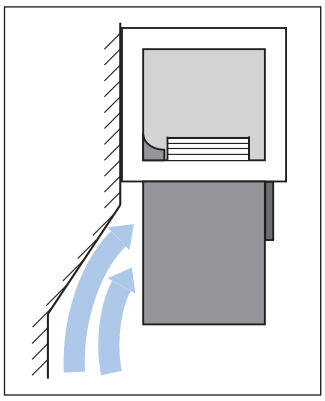

Instructions for designing a sufficiently unobstructed inflow:

- The distance x between the blower intake and neighbouring walls or obstructions should be at least 25 % of the impeller diameter.
- Inflows with angular momentum or asymmetrical rotation should be avoided.
- The inflow can be made more uniform using resistances such as those from filters or grilles.

On request, we offer calibrated blower designs that incorporate a specific installation situation.

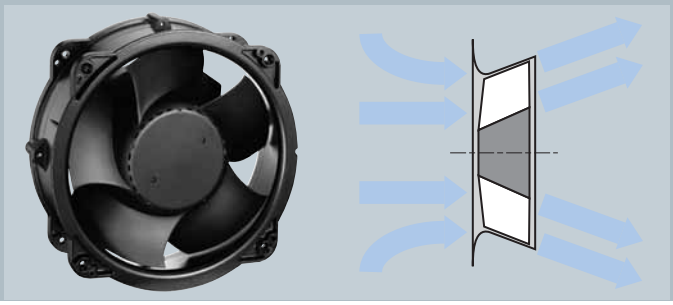

Diagonal fans (axial design)

Operating range

Directly to the right of the "saddle" (right part of the air performance curve):

- Maximum efficiency
- Minimal noise

To the left of the "saddle" (left part of the air performance curve):

- Stall area
- Drop in efficiency
- Soaring noise

The saddle of the diagonal/mixed flow fan is slightly higher than that of the axial fan. This means that the technical ratings in the optimal operating range are better than those of the axial fan.
The optimum operating range of the fan is shaded in green in the curve given here.

Mounting information

The conical housing (part of delivery) makes sure the necessary gap dimension is kept.

Effects

The effects of the diagonal/mixed flow fan are similar to those listed for the axial fan (p. 397-400).

Noise / efficiency curve

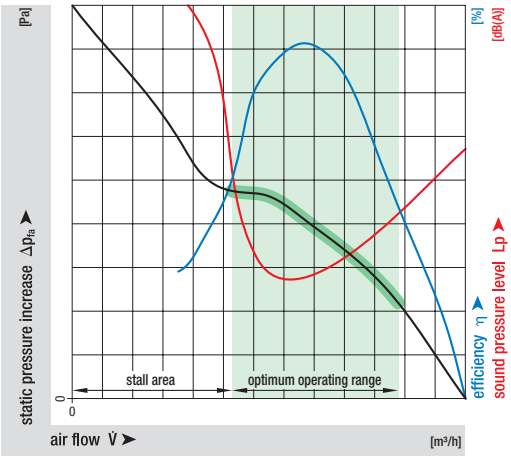

Dimensioning / change in speed

Influence of speed n

A change in speed influences:

– Air flow $\dot{V}$

$\dot{V} \sim n$

– Static pressure increase Δp_{fa}

$\Delta p_{fa} \sim n^2$

– Requirement of energy P_1

$P_1 \sim n^3$

Curve

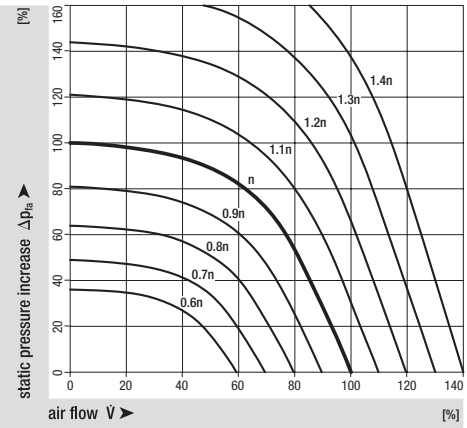

Influence of the speed n on the sound level Lw

When the speed changes, the approximate sound level can be determined using the diagram to the right and the following formula:

$Lw_2 - Lw_1 = 50\ dB \cdot \log (n_2 : n_1)$

Lw_1 = Sound level after speed change

Lw_2 = Sound level before speed change

n_1 = Changed speed

n_2 = Starting speed

Curve

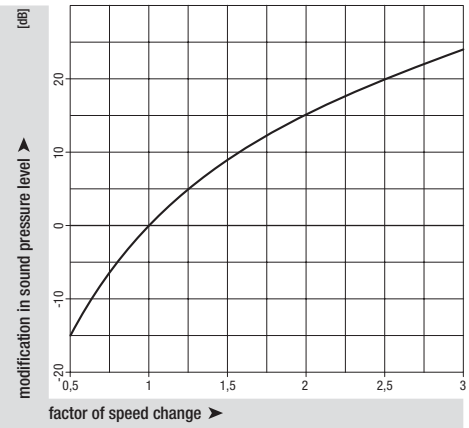

ebmpapst

Influence of impeller diameter D

A change in impeller diameter influences:

– Air flow $\dot{V}$

$\dot{V} \sim D^3$

– Static pressure increase Δp_{fa}

$\Delta p_{fa} \sim D^2$

– Requirement of energy P_1

$P_1 \sim D^5$

Curve

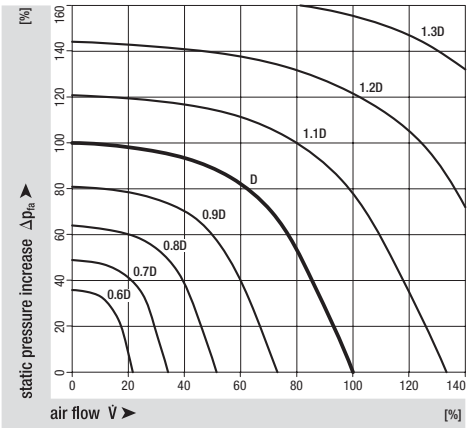

Influence of width of air discharge b (only for centrifugal impellers)

A change in width of the air discharge influences, in approximation:

– Air flow $\dot{V}$

$\dot{V} \sim b$

– Static pressure increase Δp_{fa}

$\Delta p_{fa} = \text{const}$

– Requirement of energy P_1

$P_1 \sim b$

Curve

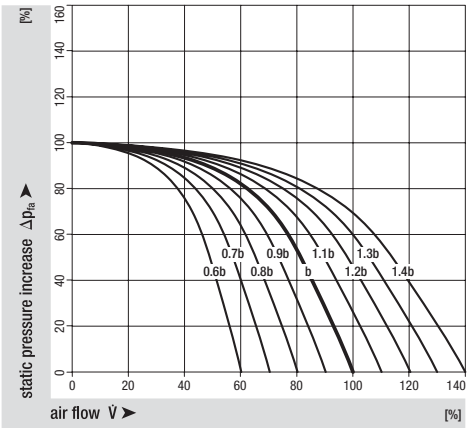

Motors

Motors made by ebm-papst

In AC and EC technology, ebm-papst relies on the proven external-rotor motor principle, with the rotor turning around the stator within. Advantages of the ebm-papst external-rotor principle are:

- *Space saving design due to integrated bearings and direct installation inside the impeller*
- *Lower load and more precise balancing of the bearing due to the fixed connection of all rotating elements*
- *Prolonged service life due to the motor-impeller unit placed right within the air flow*

The ebm-papst motors achieve very good results in efficiency and acoustic behaviour when used in EC technology.

Features	AC motors			EC motors	
	Shaded-pole motor	Single-phase capacitor motor	3-phase motor	Single-core motor	3-core motor
1 ~ AC voltage connector	Yes	Yes	Limited use (Steinmetz circuit)	Yes	Yes
3 ~ AC voltage connector	No	No	Yes	No	Yes
DC voltage connector	No	No	No	Yes	Yes
Design of circuit diagram - Stator -	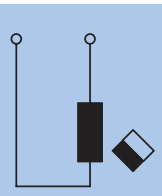	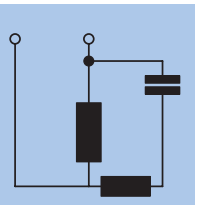	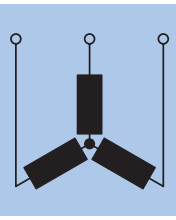 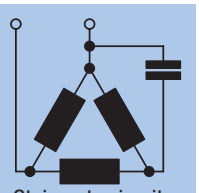 Steinmetz circuit	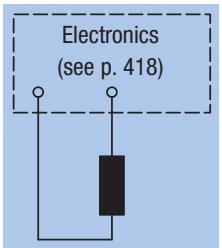	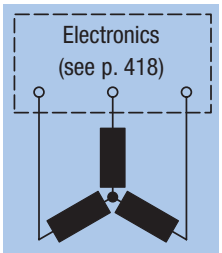
Rotor principle	Squirrel cage	Squirrel cage	Squirrel cage	Magnetic rotor	Magnetic rotor
Efficiency	Low	Medium	Good	Excellent	Excellent
Continuous speed setting integrated	No	No	No	Yes	Yes
Noise behaviour	Medium	Good	Excellent	Medium	Excellent

AC motors

AC motors (induction motors) are based in their function on the principle of the asynchronous rotation of the stator rotating field and rotor.

Torque curves of the motor types

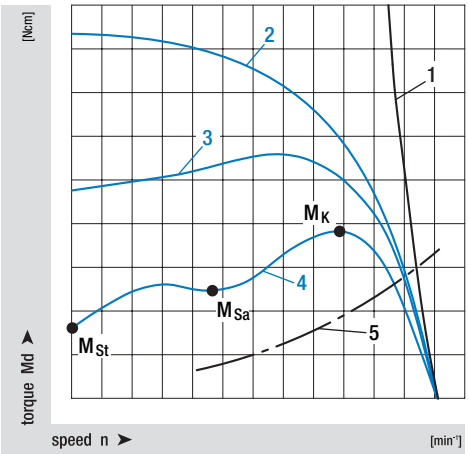

Key:

1	- EC motor	5	- System characteristic
2	- 3-phase motor	M_{St}	- Starting torque
3	- Single-phase motor	M_{Sa}	- Saddle torque
4	- Shaded-pole motor	M_K	- Breakdown torque

Start-up current

The start-up current of our AC motors is maximally 4x higher than the nominal current given.

Shaded-pole motor

Each pole of the motor is divided electro-magnetically into a main and auxiliary pole (split) via a cage winding in order to generate a starting torque.

At ebm-papst, shaded-pole motors are available as 2 or 4-pole symmetrical external or internal rotor designs.

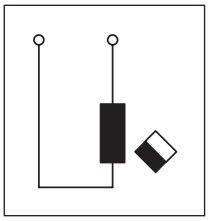

Advantages:

- Extremely robust motor design due to cast squirrel cage rotor and stable bearing system
- Cost-efficient motor
- Extremely easy to connect
- Long service life

Single-phase capacitor motor

Two cores (main winding MW and auxiliary winding AW) generate the rotating field of the single-phase capacitor motor via a capacitor connected in series to form an auxiliary winding.

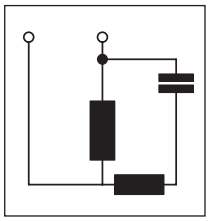

Advantages:

- Extremely robust motor design due to cast squirrel cage rotor and stable bearing system
- Diverse options for setting speed
- Efficiency between 30 % and 75 % (depending on motor size)
- Long service life
- Good vibration and noise behaviour

3-phase motor

The three motor cores are offset by 120° and generate a circular rotating field when connected to the 3-phase mains.

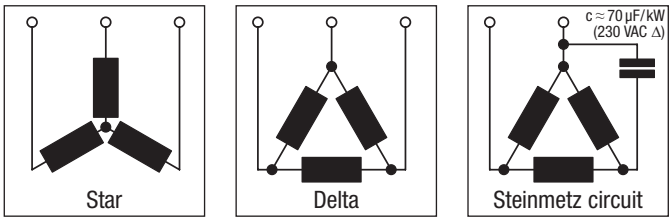

Advantages:

- Extremely robust motor design due to cast squirrel cage rotor and stable bearing system
- Very good vibration and noise behaviour
- Efficiency between 40 % and 80 % (depending on the motor size)
- Long service life

Torque curves of 3-phase motors

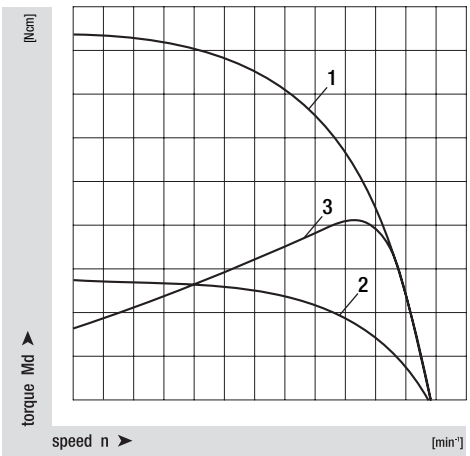

Key:

1 - Delta
2 - Star
3 - Steinmetz circuit

EC motors

EC motors are based in their function on the principle of the synchronous rotation of stator rotating field and rotor.

Torque curves of the motor types

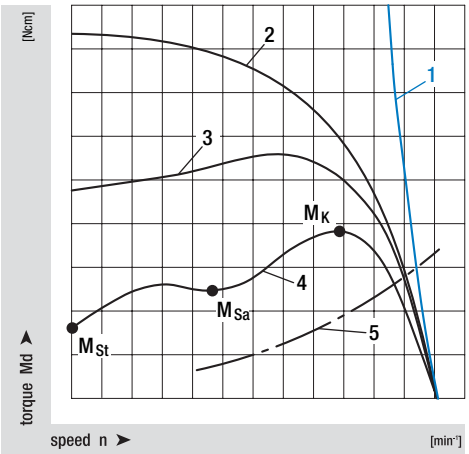

Key:

1	- EC motor	5	- System characteristic
2	- 3-phase motor	M_{St}	- Starting torque
3	- Single-phase motor	M_{Sa}	- Saddle torque
4	- Shaded-pole motor	M_K	- Breakdown torque

Single-core motor

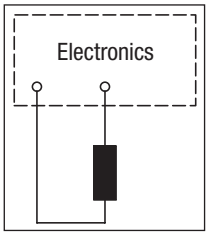

Advantages:

- Integrated speed setting
- Efficiency between 50 % and 80 % (depending on the motor size)
- Long service life

3-core motor

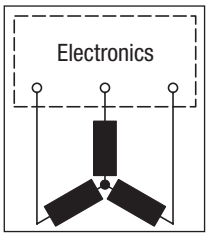

Advantages:

- Integrated speed setting
- Good efficiency between 60 % and 90 % (depending on the motor size)
- Long service life
- Very good vibration and noise behaviour even in controlled operation
- Can be used as drive motor

Control technology

Open and closed loop control using ebm-papst technology

Depending on the field of application, fan speed has to be adjusted. In AC technology, the speed setting option can result in an increase in installation expenditure and, typically, a less favourable noise performance and an increase in power input.

Here, ebm-papst EC technology is a more eco-friendly and cost-efficient alternative. The EC motor with integrated commutation electronics offers high efficiency across the entire speed range and optimal acoustic performance at minimal installation expenditure.

Features	AC							EC commutating electronics		
	Series resistance	Transformer	Speed stepping	Phase-angle control	Phase-angle control with sine filter	Frequency inverter	Frequency inverter with sine filter	Integrated	Integrated with switch power supply	External
Installation	+	–	+	–	–	–	–	++	–	–
Noise behaviour	+	++	–	––	–	–	+	++	+	+
Power input	––	–	–	–	–	+	+	++	+	+
Service life	+	+	–	–	+	–	+	+	+	+

+ = positive ++ = very positive – = negative –– = very negative

Acoustic performance of controlled motors

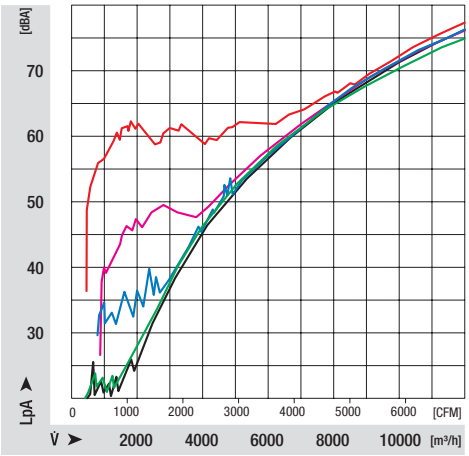

Key:
- ebm-papst EC controls
- Frequency inverter with sine filter
- Phase-angle control without sine filter
- Phase-angle control with sine filter
- Transformer

Power input of controlled motors

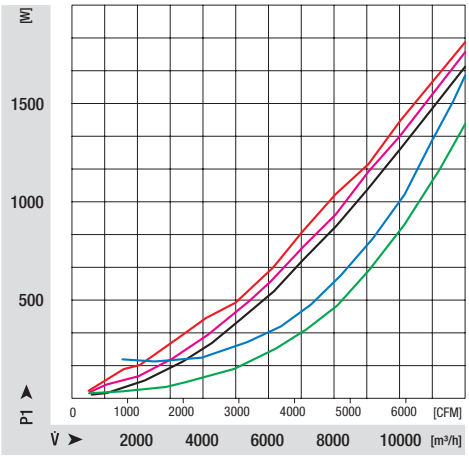

Key:
- ebm-papst EC controls
- Frequency inverter with sine filter
- Phase-angle control without sine filter
- Phase-angle control with sine filter
- Transformer

ebmpapst

Speed setting with AC motors

Speed setting helps to optimise power input and the flow noise as requested.

When selecting a voltage controller, note that the nominal current in the partial load range can be up to 20 % (depending on the controller) above the specified maximum current.

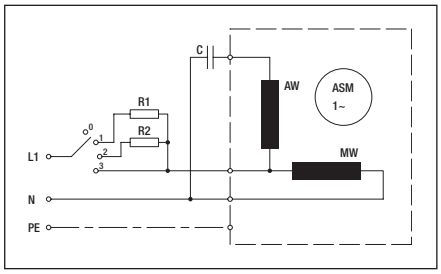

Series resistance

- Fixed speed steps
- Speed setting via change in motor voltage
- Cost-efficient
- Small capacities

Note: Capacitors or chokes reduce the loss capacity.

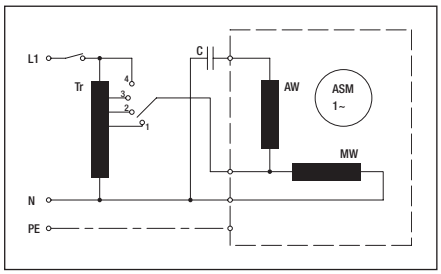

Transformer

- Fixed speed steps
- Speed setting via change in motor voltage

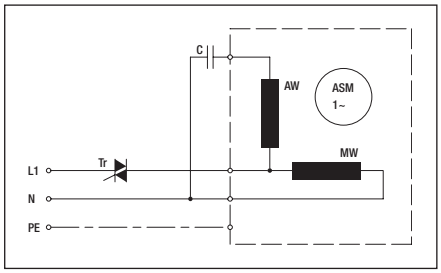

Phase-angle control

- Continuous speed setting
- Speed setting via change in motor voltage
- Cost-efficient
- Acoustic performance and warming has to be reviewed in the application

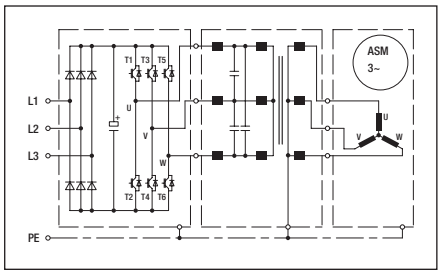

Frequency inverter with sine filter

- Continuous speed setting
- Speed setting via change in frequency of rotating field
- High efficiency

Note: An all-pole sine filter (phase-phase and phase-earth) has to be used.

Electrical connections AC

Fans (1~ 230 VAC power line)

A1) Single-phase capacitor motor
with TOP wired internally

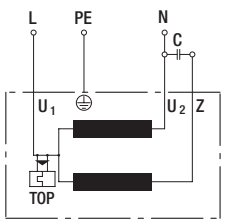

U_1 = blue
U_2 = black
Z = brown
⏚ = green/yellow

B) Shaded pole motor
with TOP wired internally

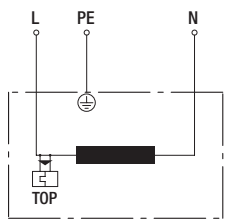

L = blue
N = brown
⏚ = green/yellow

A2a) Single-phase capacitor motor
with connection for external TOP

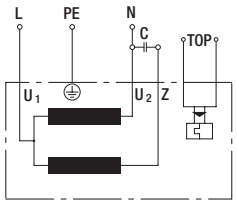

U_1 = blue
U_2 = black
Z = brown
⏚ = green/yellow

A2b) Single-phase capacitor motor
with connection for external TOP

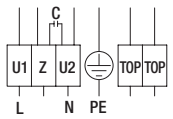

U_1 = blue
U_2 = black
Z = brown
⏚ = green/yellow

Fans
with terminal box

Fans, 1 speed (3~ 230 VAC power line)

C1) Delta connection (3~ 230 VAC power system)
without TOP

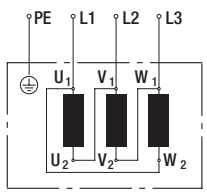

U_1 = black
U_2 = green
V_1 = blue
V_2 = white
W_1 = brown
W_2 = yellow
⏚ = green/yellow

D1) Delta connection (3~ 230 VAC power line)
with TOP

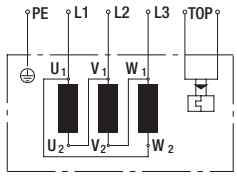

U_1 = black
U_2 = green
V_1 = blue
V_2 = white
W_1 = brown
W_2 = yellow
⏚ = green/yellow

Direction of rotation is reversed by swapping two line phases.

Fans, 1 speed (3~ 400 VAC power line)

C2) Star connection (3~ 400 VAC power system) without TOP

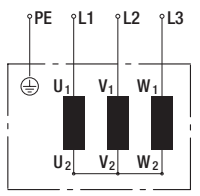

U_1 = black
U_2 = green
V_1 = blue
V_2 = white
W_1 = brown
W_2 = yellow
⏚ = green/yellow

D2) Star connection (3~ 400 VAC power line) with TOP

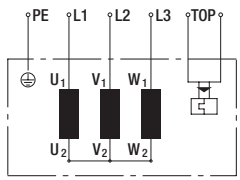

U_1 = black
U_2 = green
V_1 = blue
V_2 = white
W_1 = brown
W_2 = yellow
⏚ = green/yellow

Direction of rotation is reversed by swapping two line phases.

Fans, 2 speeds via Δ/Y-switch (3~ 400 VAC power line)

E1) Delta connection (high speed) without TOP

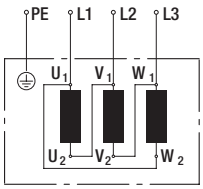

U_1 = black
U_2 = green
V_1 = blue
V_2 = white
W_1 = brown
W_2 = yellow
⏚ = green/yellow

E2) Star connection (low speed) without TOP

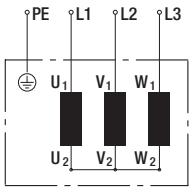

U_1 = black
U_2 = green
V_1 = blue
V_2 = white
W_1 = brown
W_2 = yellow
⏚ = green/yellow

F1a) Delta connection (high speed) with TOP

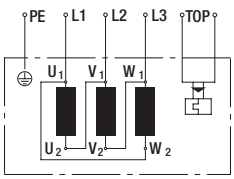

U_1 = black
U_2 = green
V_1 = blue
V_2 = white
W_1 = brown
W_2 = yellow
⏚ = green/yellow

F2a) Star connection (low speed) with TOP

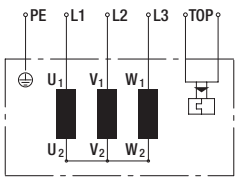

U_1 = black
U_2 = green
V_1 = blue
V_2 = white
W_1 = brown
W_2 = yellow
⏚ = green/yellow

F1b) Delta connection (high speed) with TOP

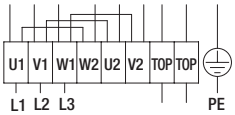

Fans with terminal box

U_1 = black
U_2 = green
V_1 = blue
V_2 = white
W_1 = brown
W_2 = yellow
⏚ = green/yellow

F2b) Star connection (low speed) with TOP

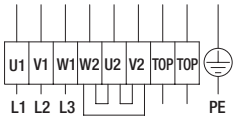

Fans with terminal box

U_1 = black
U_2 = green
V_1 = blue
V_2 = white
W_1 = brown
W_2 = yellow
⏚ = green/yellow

Direction of rotation is reversed by swapping two line phases.

Speed setting with EC motors

The speed of EC motors is set via commutation electronics. Via electronic circuits and depending on the rotor position, this commutation switches the motor currents on and off.

Principle of AC-fed commutation electronics

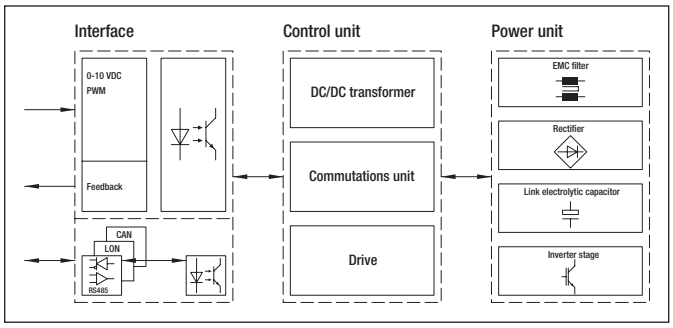

(with electrically isolated interface)

Principle of DC-fed commutation electronics

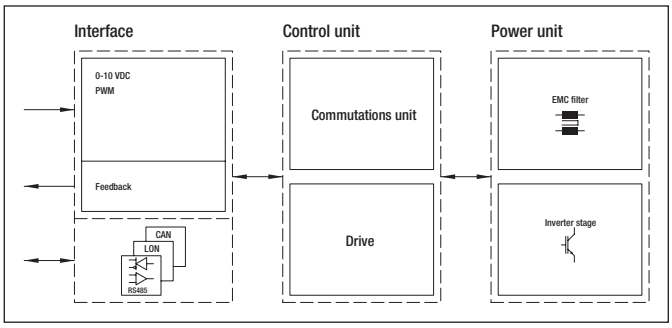

Integrated commutation electronics

- Compact unit
- Easy to install
- Low installation expenditure
- Can be operated all over the world

Note: Motors with 12-72 VDC supply voltage have to be fed via electrically isolated supply unit.

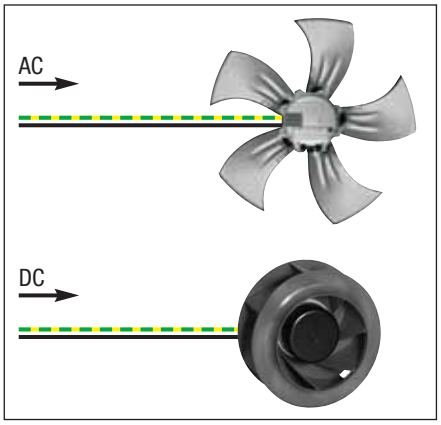

Integrated commutation electronics with switch power supply

- Protective extra-low voltage 24 / 48 VDC

Note: Switch power supply is not included but has to be ordered as accessory.

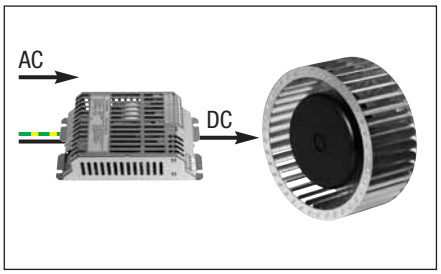

Typical features of the ebm-papst commutation electronics:

- Input for analogue and digital signals
- Open and closed loop control as well as monitoring of the motor
- Integrated EMC filter
- High efficiency throughout the entire speed range
- Speed setting via linear set value (0-10 VDC) or PWM signal
- Low-noise operation across the entire speed range
- Minimal extra costs for additional functions (open/closed loop control)
- Optional BUS interface

Types of alarms and reactions with EC motors

With DC-fed EC motors, certain faults in modes of operation are recognised by the electronics, and the motor is automatically restarted.
With AC-fed EC motors, certain faults in modes of operation are recognised by the electronics, and the motor is switched off.
The motor restarts automatically after the following failures have been diagnosed:

- Line failure
- Phase failure
- Line under-voltage
- DC link voltage too high or too low
- Locked rotor

With the following types of failures, there is no automatic restart.
Here, hardware or software reset is required:

- Motor temperature too high
- Temperature of cooling element or ambient temperature of electronics too high
- Hall failure

Hardware reset

Switching off the fan and restarting it after one minute results in hardware reset.

Software reset

Software reset is via ebmBUS and LISA software, hand-held control terminal, or PDA with Fan Control Software.

G) EC motors (nominal voltage 24 / 48 VDC)

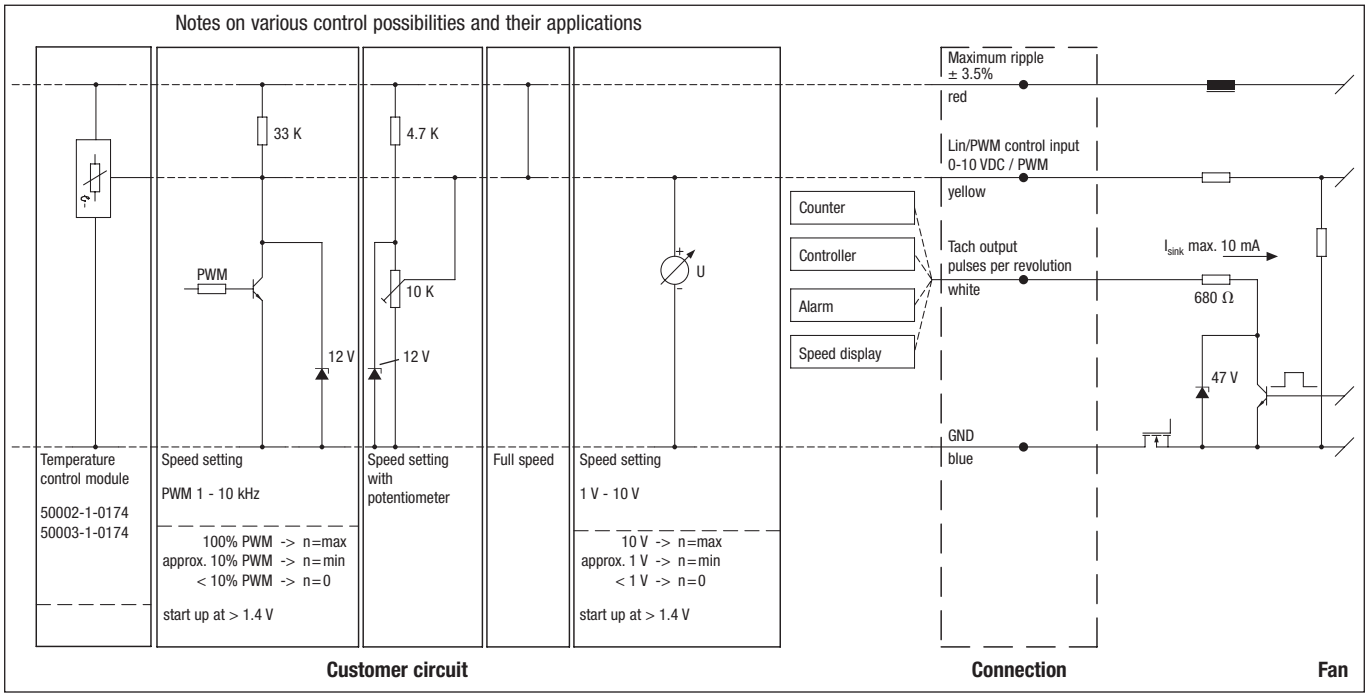

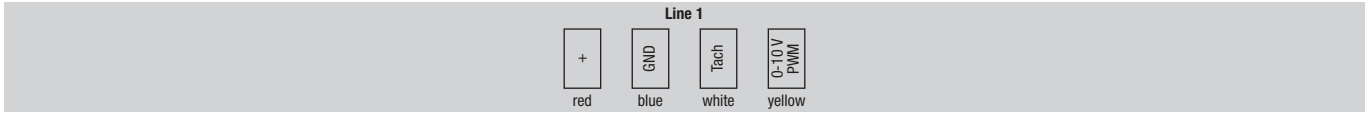

Line	Connection	Colour	Assignment / function
1	+	red	Maximum ripple ± 3.5 %
	GND	blue	GND

Line	Connection	Colour	Assignment / function
1	Tach	white	Tach output:
			2 pulses / revolution (M1G045/M1G055)
			3 pulses / revolution (M1G074/M3G084)
	0-10 V / PWM	yellow	Control input (Impedance 100 kΩ)

H1) EC motors (size 055, line-fed)

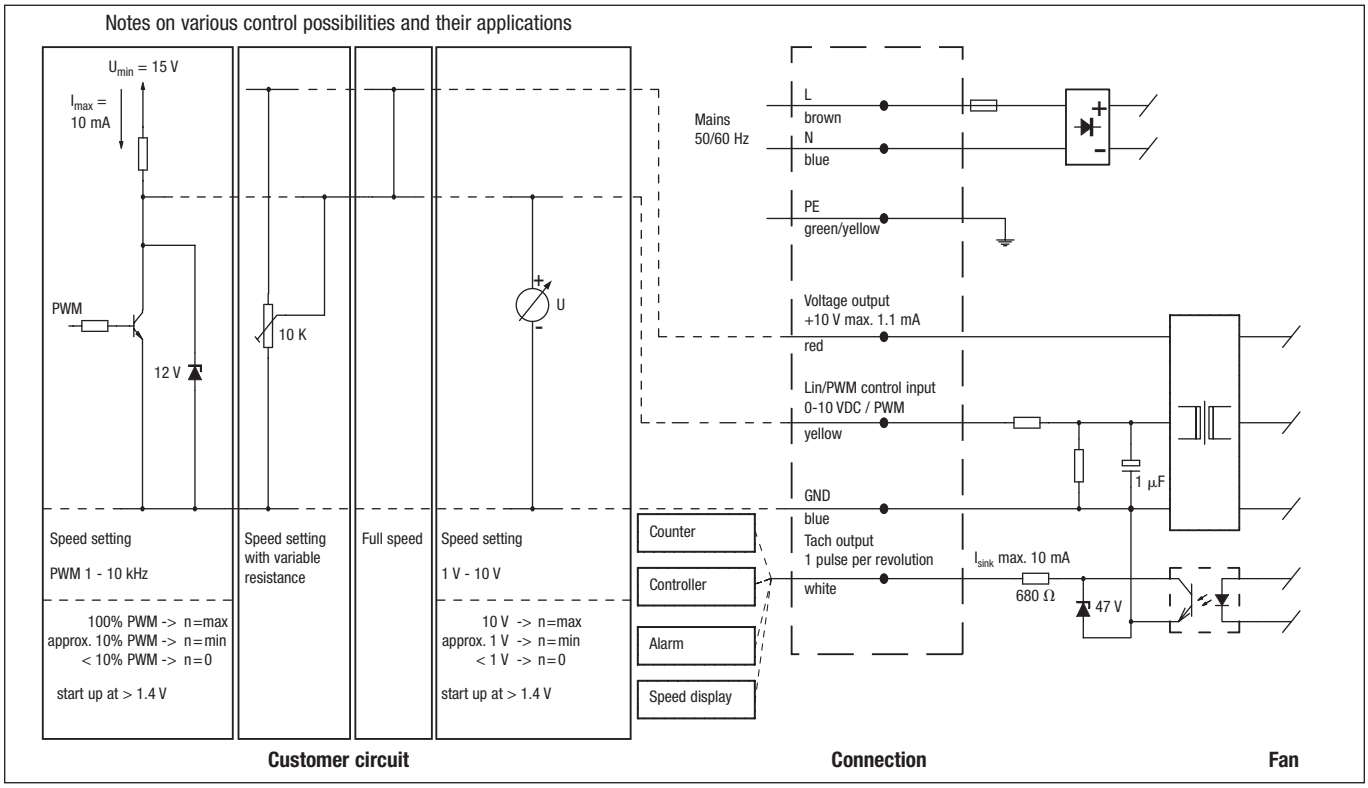

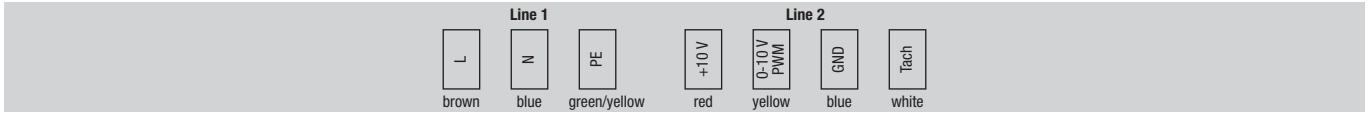

Line	Connection	Colour	Assignment / function
1	L	brown	Mains 50/60 Hz, phase
	N	blue	Mains 50/60 Hz, neutral
	PE	green/yel	Protective earth

Line	Connection	Colour	Assignment / function
2	+10 V	red	Voltage output +10 V max. 1.1 mA
	0-10 V / PWM	yellow	Control input (Impedance 100 kΩ)
	GND	blue	GND
	Tach	white	Tach output: 1 pulse per revolution

H2) EC motors (size 055, line-fed and constant air flow)

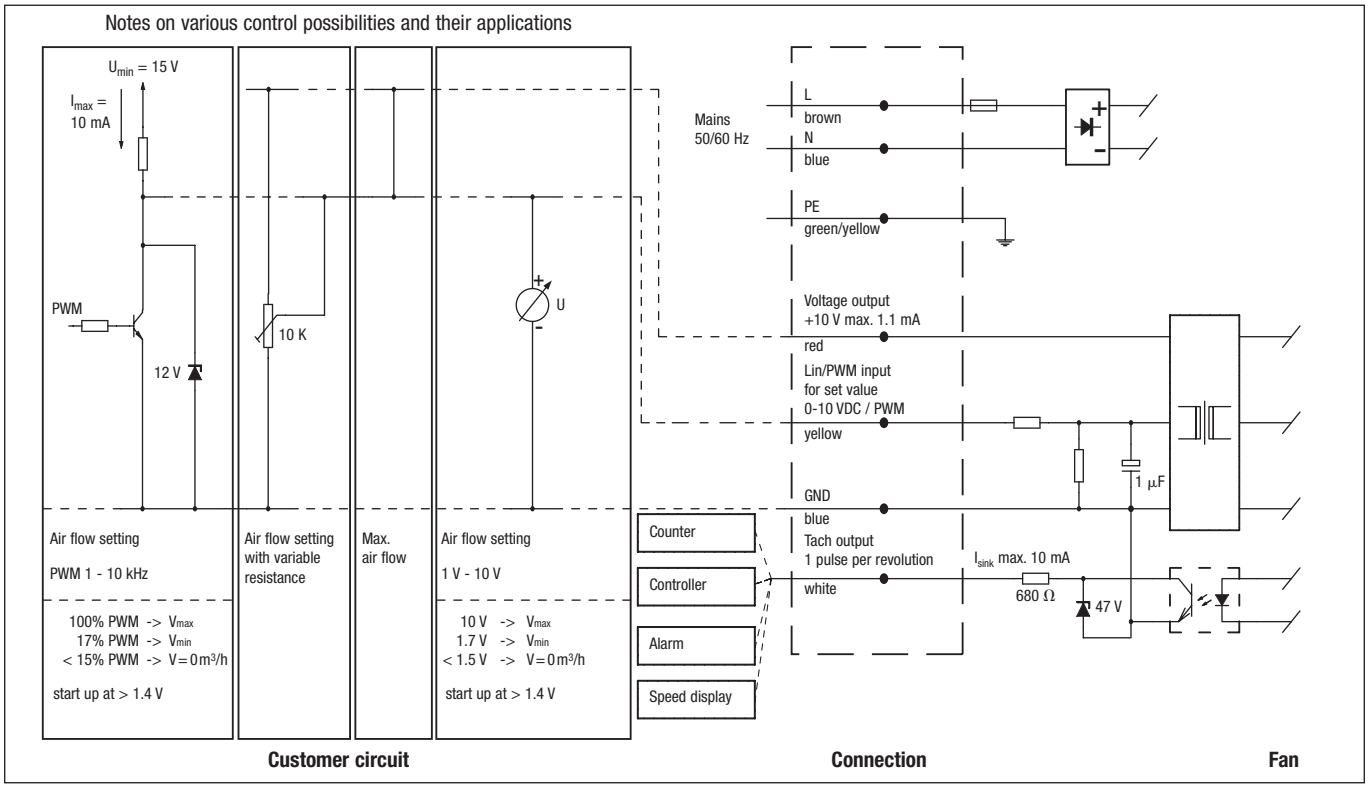

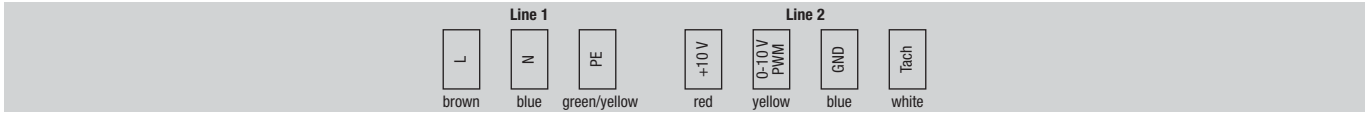

Line	Connection	Colour	Assignment / function
1	L	brown	Mains 50/60 Hz, phase
	N	blue	Mains 50/60 Hz, neutral
	PE	green/yel	Protective earth

Line	Connection	Colour	Assignment / function
2	+10 V	red	Voltage output +10 V max. 1.1 mA
	0-10 V / PWM	yellow	Input for set value (impedance 100 kΩ)
	GND	blue	GND
	Tach	white	Tach output: 1 pulse per revolution

J1) EC motors (size 074, line-fed)

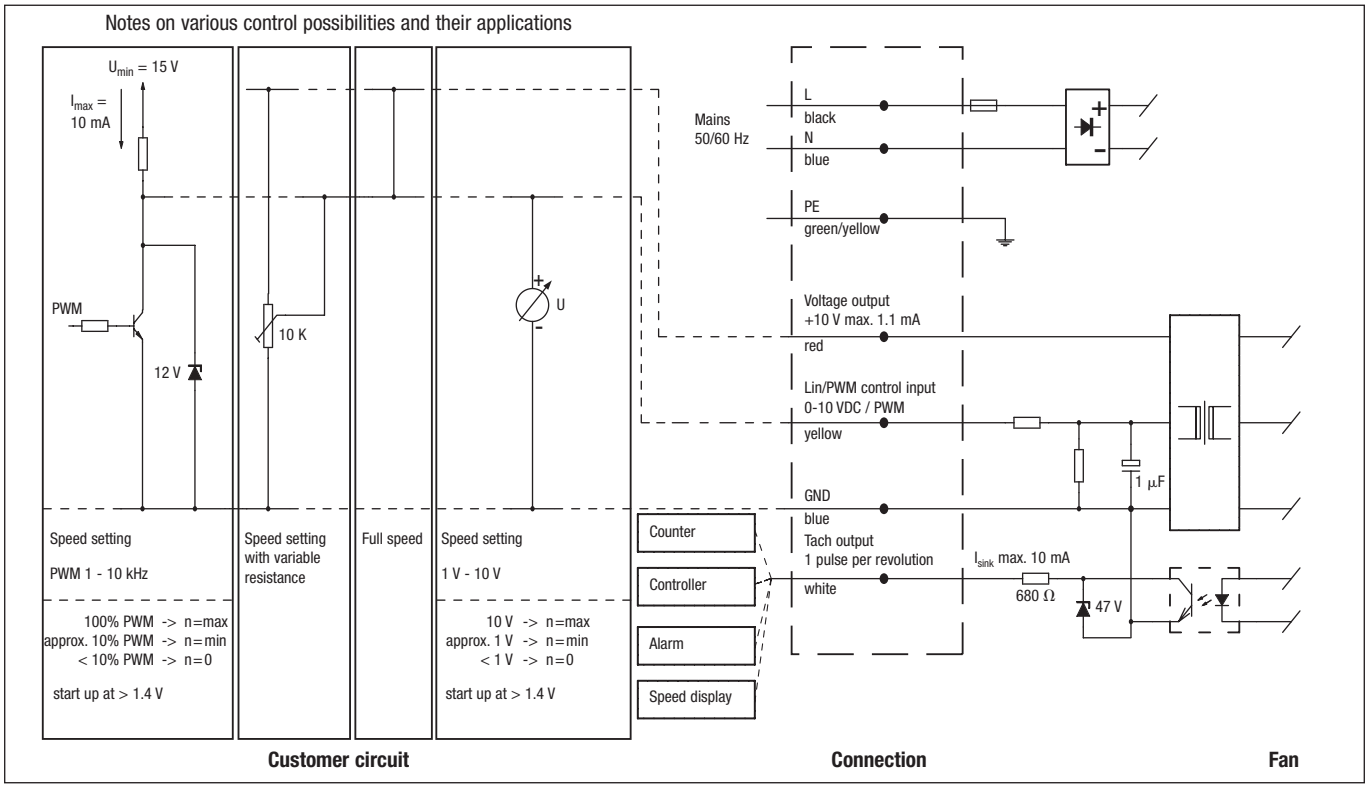

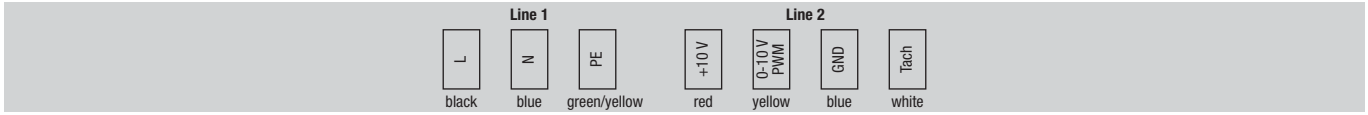

Line	Connection	Colour	Assignment / function
1	L	black	Mains 50/60 Hz, phase
	N	blue	Mains 50/60 Hz, neutral
	PE	green/yel	Protective earth

Line	Connection	Colour	Assignment / function
2	+10 V	red	Voltage output +10 V max. 1.1 mA
	0-10 V / PWM	yellow	Control input (Impedance 100 kΩ)
	GND	blue	GND
	Tach	white	Tach output: 1 pulse per revolution

J2) EC motors (size 074, line-fed and constant air flow)

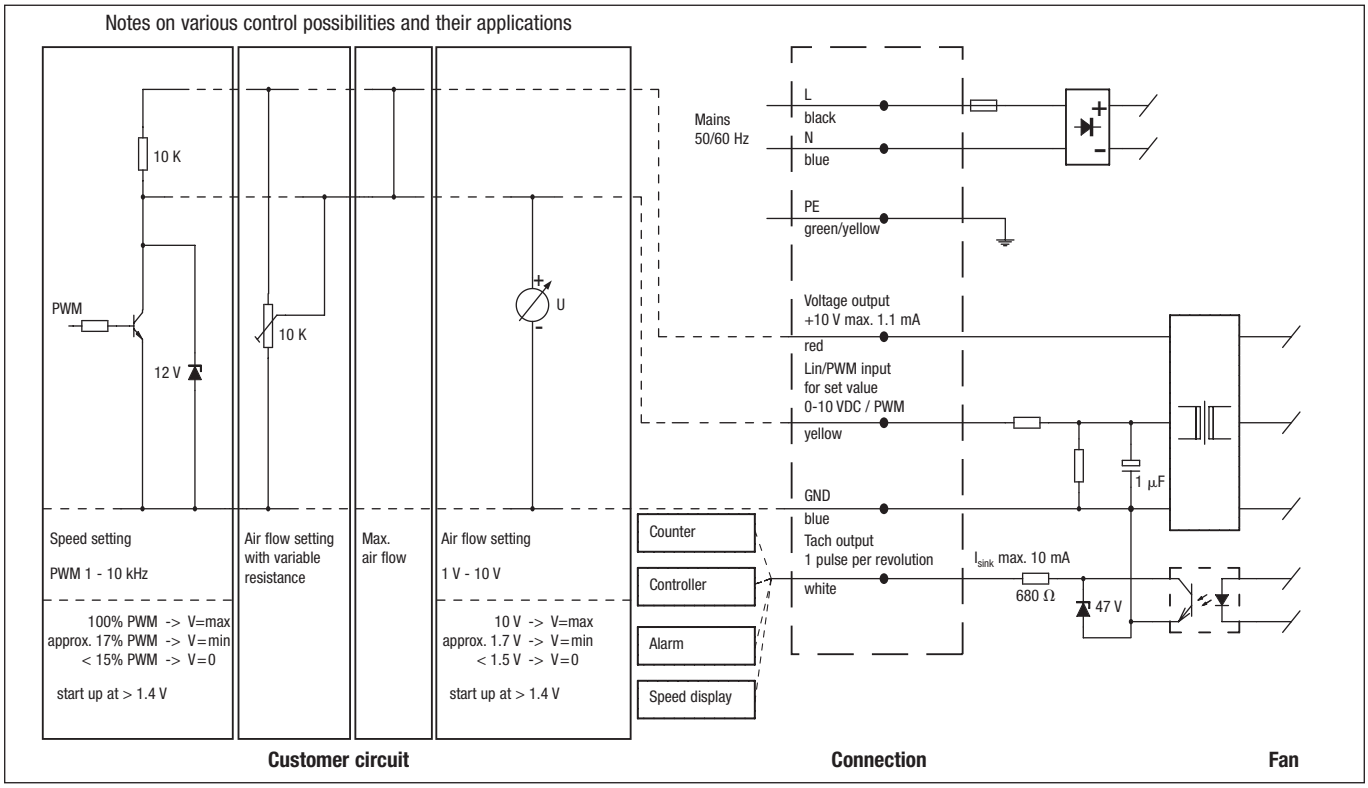

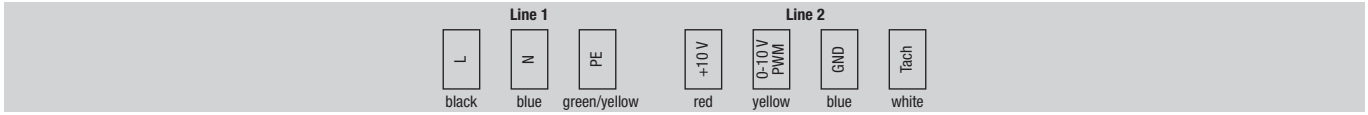

Line	Connection	Colour	Assignment / function
1	L	black	Mains 50/60 Hz, phase
	N	blue	Mains 50/60 Hz, neutral
	PE	green/yel	Protective earth

Line	Connection	Colour	Assignment / function
2	+10 V	red	Voltage output +10 V max. 1.1 mA
	0-10 V / PWM	yellow	Input for set value (impedance 100 kΩ)
	GND	blue	GND
	Tach	white	Tach output: 1 pulse per revolution

K1) EC motors (size 084, line-fed)

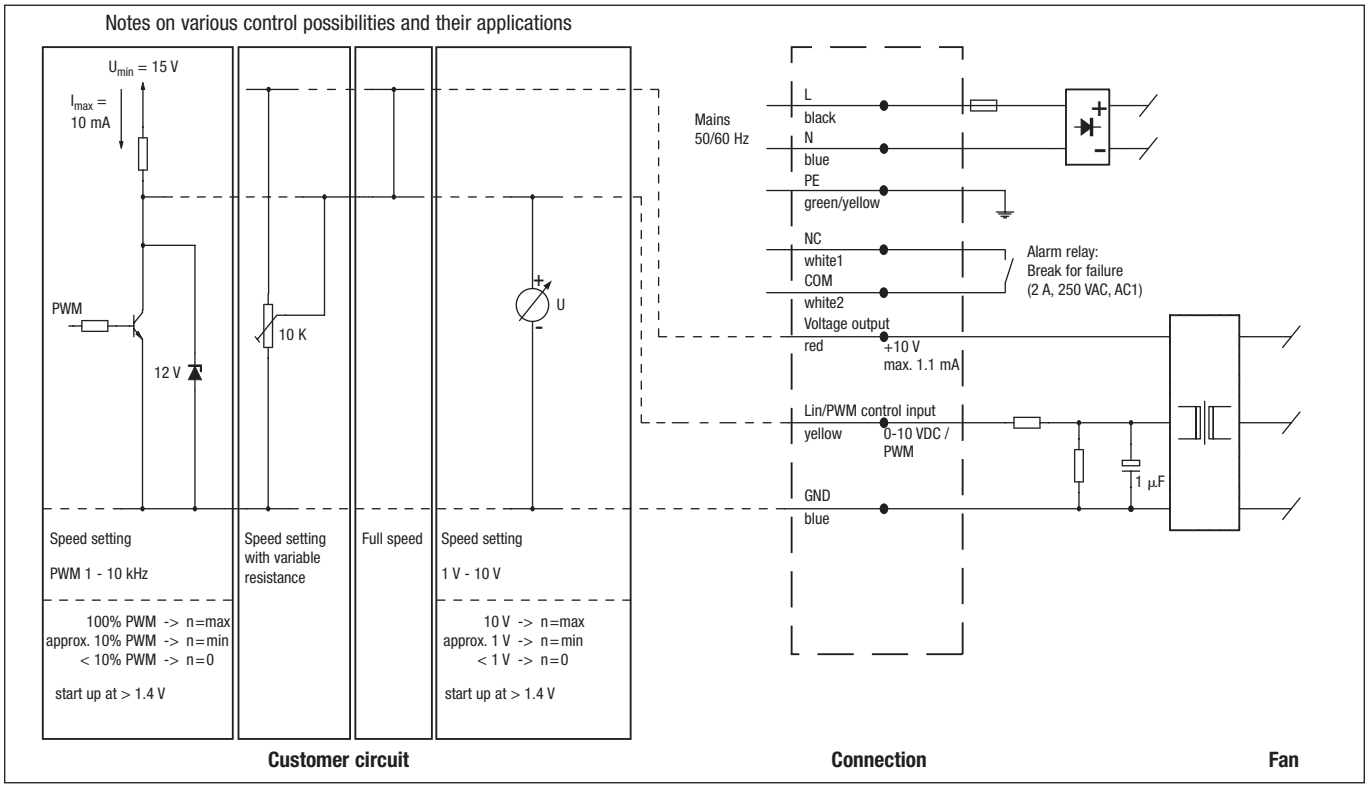

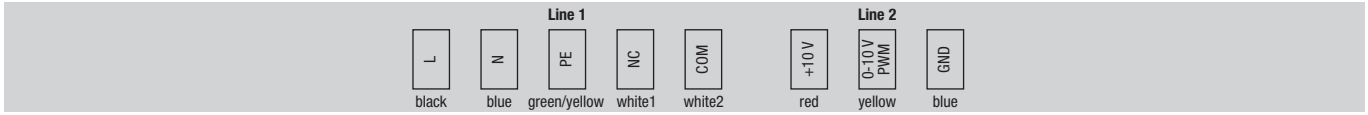

Line	Connection	Colour	Assignment / function
1	L	black	Mains 50/60 Hz, phase
	N	blue	Mains 50/60 Hz, neutral
	PE	green/yel	Protective earth
	NC	white1	Alarm relay, break for failure
	COM	white2	Alarm relay, COMMON

Line	Connection	Colour	Assignment / function
2	+10 V	red	Voltage output +10 V max. 1.1 mA
	0-10 V / PWM	yellow	Control input (Impedance 100 kΩ)
	GND	blue	GND

K2) EC motors (size 084/112 with ebmBUS, mains-powered)

Connector	Connection	Assignment / function
KL1	PE	Protective earth
	N	Mains 50/60 Hz, neutral
	L	Mains 50/60 Hz, phase

Connector	Connection	Assignment / function
KL2	RS B	RS485 interface for ebmBUS; RS B
	RS A	RS485 interface for ebmBUS; RS A
	+15 V	Operation: +15 V (50 mA); Alarm: 0 V
	0 V	Operation: 0 V; Alarm: +15 V (50 mA)

L1) EC motors (size 112, single-phase mains-powered)

Connector	Connection	Assignment / function
PE	PE	Protective earth
KL1	N	Mains 50/60 Hz, neutral
	L	Mains 50/60 Hz, phase
KL2	NC	Alarm relay, break for failure
	COM	Alarm relay, COMMON (2A, 250 VAC, AC1)
	NO	Alarm relay, make for failure

Connector	Connection	Assignment / function
KL3	OUT	Master output 0-10 V max. 3 mA
	GND	GND
	0-10 V / PWM	Control / Actual value input (Impedance 100 kΩ)
	+10 V	Supply for external potentiometer,
		10 VDC (+10 %) @ 10 mA
	+20 V	Supply for external sensor,
		20 VDC (±20 %) @ 50 mA
	4-20 mA	Control / Actual value input
	0-10 V / PWM	Control / Actual value input
	GND	GND
	RSB	RS485 interface for ebmBUS; RS B
	RSA	RS485 interface for ebmBUS; RS A
	RSB	RS485 interface for ebmBUS; RS B
	RSA	RS485 interface for ebmBUS; RS A

L2) EC motors (size 112, three-phase mains-powered)

Connector	Connection	Assignment / function
PE	PE	Protective earth
KL1	L3	Mains; L3
	L2	Mains; L2
	L1	Mains; L1
KL2	NC	Alarm relay, break for failure
	COM	Alarm relay, COMMON (2A, 250 VAC, AC1)
	NO	Alarm relay, make for failure

Connector	Connection	Assignment / function
KL3	OUT	Master output 0-10 V max. 3 mA
	GND	GND
	0-10 V / PWM	Control / Actual value input (Impedance 100 kΩ)
	+10 V	Supply for external potentiometer,
		10 VDC (+10 %) @ 10 mA
	+20 V	Supply for external sensor,
		20 VDC (±20 %) @ 50 mA
	4-20 mA	Control / Actual value input
	0-10 V / PWM	Control / Actual value input
	GND	GND
	RSB	RS485 interface for ebmBUS; RS B
	RSA	RS485 interface for ebmBUS; RS A
	RSB	RS485 interface for ebmBUS; RS B
	RSA	RS485 interface for ebmBUS; RS A

M) EC motors (size 150, three-phase mains-powered)

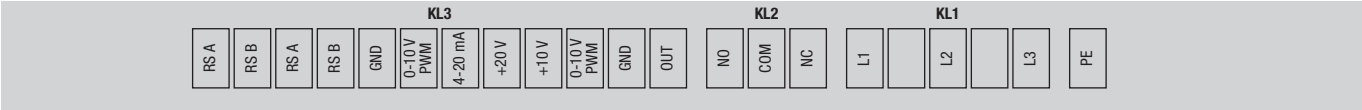

Connector	Connection	Assignment / function
PE	PE	Protective earth
KL1	L3	Mains; L3
	L2	Mains; L2
	L1	Mains; L1
KL2	NC	Alarm relay, break for failure
	COM	Alarm relay, COMMON (2A, 250 VAC, AC1)
	NO	Alarm relay, make for failure

Connector	Connection	Assignment / function
KL3	OUT	Master output 0-10 V max. 3 mA
	GND	GND
	0-10 V / PWM	Control / Actual value input (Impedance 100 kΩ)
	+10 V	Supply for external potentiometer,
		10 VDC (+10 %) @ 10 mA
	+20 V	Supply for external sensor,
		20 VDC (±20 %) @ 50 mA
	4-20 mA	Control / Actual value input
	0-10 V / PWM	Control / Actual value input
	GND	GND
	RSB	RS485 interface for ebmBUS; RS B
	RSA	RS485 interface for ebmBUS; RS A
	RSB	RS485 interface for ebmBUS; RS B
	RSA	RS485 interface for ebmBUS; RS A

Connection diagram: Condensing pressure control with master-slave fans

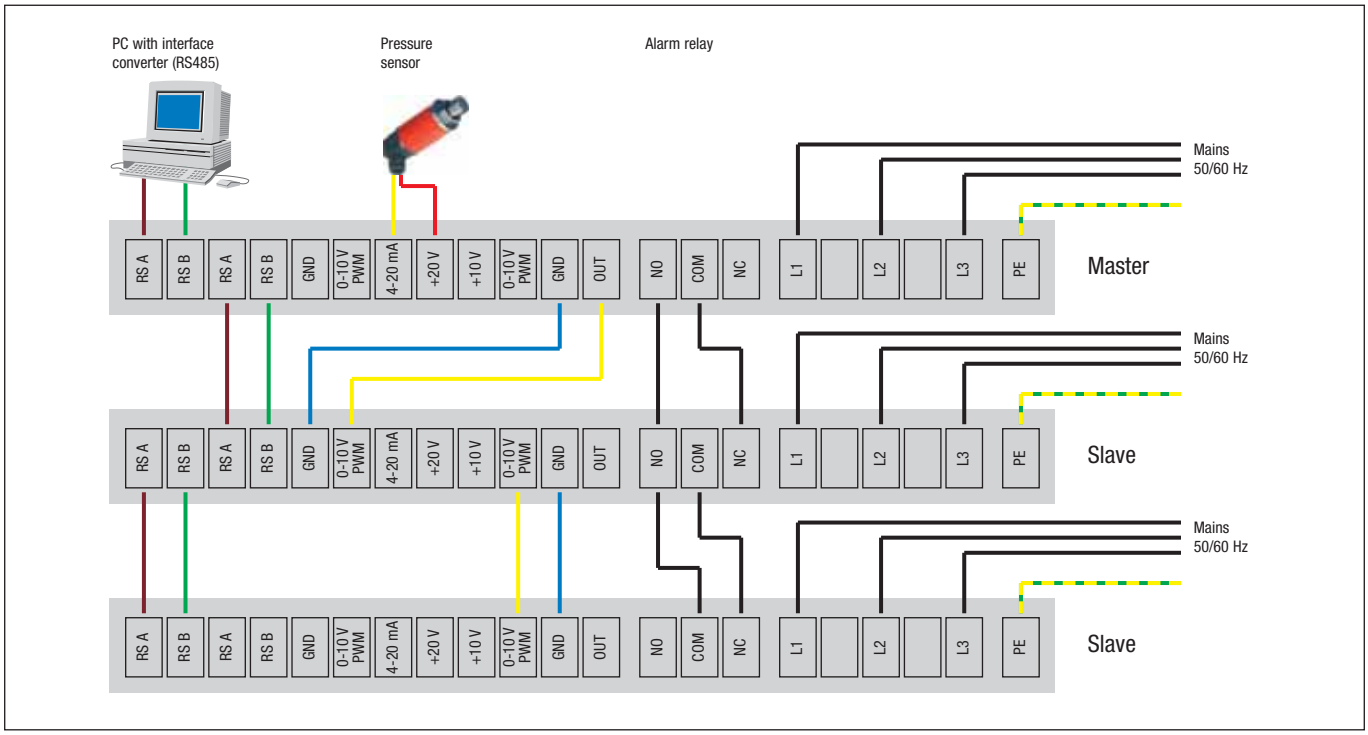

fan agent
compact fan agent
motor specialist
motor agent

Distributors, agencies and subsidiaries

Germany

ebm-papst
Mulfingen GmbH & Co. KG

Bachmühle 2
D-74673 Mulfingen
Phone +49 (0) 79 38 / 81-0
Fax +49 (0) 79 38 / 81-110
info1@de.ebmpapst.com

www.ebmpapst.com

ebm-papst
St. Georgen GmbH & Co. KG

Hermann-Papst-Straße 1
D-78112 St. Georgen
Phone +49 (0) 77 24 / 81-0
Fax +49 (0) 77 24 / 81-13 09
info2@de.ebmpapst.com

www.ebmpapst.com

ebm-papst
Landshut GmbH

Hofmark-Aich-Straße 25
D-84030 Landshut
Phone +49 (0) 8 71 / 707-0
Fax +49 (0) 8 71 / 707-465
info3@de.ebmpapst.com

www.ebmpapst.com

Contacts

Berlin
Dipl.-Ing. (TH) Jens Duchow
Händelstraße 7
D-16341 Panketal
Phone +49 (0) 30 / 94 41 49 62
Fax +49 (0) 30 / 94 41 49 63
Jens.Duchow@de.ebmpapst.com

Dortmund
Dipl.-Ing. (FH) Hans-Joachim Pundt
Auf den Steinern 3
D-59519 Möhnesee-Völlinghausen
Phone +49 (0) 29 25 / 80 04 07
Fax +49 (0) 29 25 / 80 04 08
Hans-Joachim.Pundt@de.ebmpapst.com

Frankfurt
Dipl.-Ing. Christian Kleffmann
Dr. Hermann-Krause Straße 23
D-63452 Hanau
Phone +49 (0) 61 81 / 18 98 12
Fax +49 (0) 61 81 / 18 98 13
Christian.Kleffmann@de.ebmpapst.com

Halle
Dipl.-Ing. (TU) Michael Hanning
Lerchenweg 4
D-06120 Lieskau
Phone +49 (0) 3 45 / 5 51 24 56
Fax +49 (0) 3 45 / 5 51 24 57
Michael.Hanning@de.ebmpapst.com

Hamburg
Ingenieurbüro Breuell GmbH
Dirk Kahl
Elektroingenieur
Grützmühlenweg 40
D-22339 Hamburg
Phone +49 (0) 40 / 53 80 92 10
Fax +49 (0) 40 / 53 80 92 84
Dirk.Kahl@de.ebmpapst.com

Kassel
Dipl.-Ing. (FH) Ralph Brück
Hoherainstraße 38
D-35075 Gladenbach
Phone +49 (0) 64 62 / 40 71 10
Fax +49 (0) 64 62 / 40 71 11
Ralph.Brueck@de.ebmpapst.com

Koblenz
Winfried Schaefer
Hinter der Kirch 10
D-56767 Uersfeld
Phone +49 (0) 26 57 / 16 96
Fax +49 (0) 26 57 / 16 76
Winfried.Schaefer@de.ebmpapst.com

Munich
Dipl.-Wirt.-Ing. (FH) Jens Peter
Steinbergweg 6
D-82285 Hattenhofen
Phone +49 (0) 81 45 / 80 92 25
Fax +49 (0) 81 45 / 80 92 26
Jens.Peter@de.ebmpapst.com

Nuremberg
Friedrich Klein
Adlerstraße 49/1
D-73540 Heubach
Phone +49 (0) 71 73 / 49 83
Fax +49 (0) 71 73 / 80 53
Friedrich.Klein@de.ebmpapst.com

Offenburg
Dipl.-Ing (FH) Ralf Braun
Hubeneck 21
D-77704 Oberkirch
Phone +49 (0) 78 02 / 98 22 52
Fax +49 (0) 78 02 / 98 22 53
Ralf.Braun@de.ebmpapst.com

Stuttgart
Dipl.-Ing. (FH) Rudi Weinmann
Mühlhaldenweg 13
D-73207 Plochingen
Phone +49 (0) 71 53 / 92 89 80
Fax +49 (0) 71 53 / 92 89 81
Rudi.Weinmann@de.ebmpapst.com

Ulm
Günter Wilhelm
Allgäuer Straße 7
D-89269 Vöhringen
Phone +49 (0) 73 06 / 92 46 08
Fax +49 (0) 73 06 / 92 46 48
Guenter.Wilhelm@de.ebmpapst.com

Distributors

Frankfurt
R.E.D. Handelsgesellschaft mbH
Gutenbergstraße 3
D-63110 Rodgau - Jügesheim
Phone +49 (0) 61 06 / 84 10
Fax +49 (0) 61 06 / 84 11 11
info@red-elektromechanik.de
www.red-elektromechanik.de

Hamburg
Breuell + Hilgenfeldt GmbH
Grützmühlenweg 40
D-22339 Hamburg
Phone +49 (0) 40 / 53 80 92 20
Fax +49 (0) 40 / 53 80 92 84
info@breuell.de

Munich
A. Schweiger GmbH
Ohmstraße 1
D-82054 Sauerlach
Phone +49 (0) 81 04 / 8 97 0
Fax +49 (0) 81 04 / 8 97 90
info@schweiger-gmbh.de
www.schweiger-gmbh.com

● *Express* **Service-Center** (1 to 5 pieces)

North
Breuell + Hilgenfeldt GmbH
Grützmühlenweg 40
D-22339 Hamburg
Phone +49 (0) 40 / 53 80 92 20
Fax +49 (0) 40 / 53 80 92 84
ebm@breuell.de

South
HDS Ventilatoren Vertriebs GmbH
Glaswiesenstraße 1
D-74677 Dörzbach
Phone +49 (0) 79 37 / 80 29 68
Fax +49 (0) 79 37 / 80 25 78
info@hds-gmbh.net

Europe

Austria
ebm-papst Motoren & Ventilatoren GmbH
Westbahnstraße 5
A-4490 St. Florian
Phone +43 / 72 24 / 66 01 10
Fax +43 / 72 24 / 66 01 120
info@at.ebmpapst.com
www.ebmpapst.at

Belarus
ebm-papst Bel AgmbH
Prospekt Nesavisimosti 11/2 Zimmer 325, 512
BY-220050 Minsk
Phone +375 / 17 / 209 95 61
Fax +375 / 17 / 209 95 61
info@by.ebmpapst.com

Belgium
VIBO Benelux B. V.
Sales office Belgium-Luxembourg
Romeinsestraat 6/0101
Research Park Haasrode
B-3001 Heverlee-Leuven
Phone +32 / 16 / 39 62 00
Fax +32 / 16 / 39 62 20
info@vibobenelux.com
www.vibobenelux.com

Bulgaria
ebm-papst Romania S.R.L.
Str. Tirnavei Nr. 20
RO-500327 Brasov
Phone +40 / 268 / 312 805
Fax +40 / 268 / 312 805
dudasludovic@xnet.ro

Croatia
ebm-papst Industries Kft.
Mátyás u. 1/A
H-2220 Vecsés
Phone +36 / 29 / 55 01 90
Fax +36 / 29 / 55 01 94
office@hu.ebmpapst.com
www.ebmpapst.hu

Cyprus
MATERO LTD
37, St. Kyriakides Avenue
P.O. Box 51744
CY-3080 Limassol
Phone +357 / 25 / 87 00 30
Fax +357 / 25 / 38 13 66
matero@cytanet.com.cy
www.matero.com.cy

Czech Republic / Slovakia
ebm-papst CZ s.r.o.
Krátká 379
CZ-66461 Rajhradice u Brna
Phone +420 / 5 / 47 23 26 16
Fax +420 / 5 / 47 23 26 22
info@ebmpapst.cz
www.ebmpapst.cz

Denmark
Jenk A/S
Vallensbækvej 21
DK-2605 Brøndby
Phone +45 / 43 / 63 11 11
Fax +45 / 43 / 63 05 05
jenk@jenk.dk
www.jenk.dk

Estonia
ebm-papst Oy
Eesti Filiaal
Kadaka tee 3
EST-10621 Tallinn
Phone +372 / 655 / 6978
Fax +372 / 655 / 6979

Finland
ebm-papst Oy
Puistotie 1
FIN-02760 Espoo
Phone +358 / 9 / 88 70 22 0
Fax +358 / 9 / 88 70 22 13
mailbox@ebmpapst.fi
www.ebmpapst.fi

France
ebm-papst SARL
ZI Nord - rue A. Mohler
BP 62
F-67212 Obernai-Cedex
Phone +33 / 820 326 266
Fax +33 / 3 / 88 67 38 83
info@ebmpapst.fr
www.ebmpapst.fr

Greece
Helcoma
Th. Rotas & Co OE
Davaki 65
GR-17672 Kallithea-Attiki
Phone +30 / 210 / 951 37 05
Fax +30 / 210 / 951 34 90
contact@helcoma.gr
www.helcoma.gr

Hungary
ebm-papst Industries Kft.
Mátyás u. 1/A
H-2220 Vecsés
Phone +36 / 29 / 55 01 90
Fax +36 / 29 / 55 01 94
office@hu.ebmpapst.com
www.ebmpapst.hu

Iceland
RJ Engineers
Stangarhyl 1A
IS-110 Reykjavik
Phone +354 / 567 80 30
Fax +354 / 567 80 15
rj@rj.is
www.rj.is

Ireland
ebm-papst Limited
Portlaoise Business & Technology Park
Mountrath Road
IRL-Portlaoise, Co. Laois
Phone +353 / 57 86 / 643 43
Fax +353 / 57 86 / 643 46
sales@ie.ebmpapst.com
www.ebmpapst.ie

Italy
ebm-papst Srl
Via Cornaggia 108
I-22076 Mozzate (Co)
Phone +39 / 03 31 / 83 62 01
Fax +39 / 03 31 / 82 15 10
info@it.ebmpapst.com
www.ebmpapst.it

Macedonia
ebm-papst Industries Kft.
Mátyás u. 1/A
H-2220 Vecsés
Phone +36 / 29 / 55 01 90
Fax +36 / 29 / 55 01 94
office@hu.ebmpapst.com
www.ebmpapst.hu

Netherlands
VIBO Benelux B. V.
Engelseweg 127
Postbus 230
NL-5705 AC Helmond
Phone +31 / 4 92 / 50 29 00
Fax +31 / 4 92 / 50 29 50
verkoop@vibobenelux.com
www.vibobenelux.com

fan agent
compact fan agent
motor specialist
motor agent

Distributors, agencies and subsidiaries

Norway
ebm-papst AS
P.B. 173 Holmlia
N-1203 Oslo
Phone +47 / 22 / 76 33 40
Fax +47 / 22 / 61 91 73
mailbox@ziehl-ebm.no
www.ziehl-ebm.no

Poland
ebm-papst Polska Sp. z o.o.
ul. Annopol 4A
PL-03236Warszawa
Phone +48 / 22 / 675 78 19
Fax +48 / 22 / 676 95 87
office@ebmpapst.pl
www.ebmpapst.pl

Portugal
ebm-papst (Portugal), Lda
Av. Marechal Gomes da Costa, 35 e
Rua Conselheiro Emidio Navarro
P-1800-255 Lisboa
Phone +351 / 21 / 839 48 80
Fax +351 / 21 / 839 47 59
info@pt.ebmpapst.com

Romania
ebm-papst Romania S.R.L.
Str. Tirnavei Nr. 20
RO-500327 Brasov
Phone +40 / 268 / 312 805
Fax +40 / 268 / 312 805
dudasludovic@xnet.ro

Russia
ebm-papst Ural GmbH
Rosa Luxembourg Strasse 59
RU-620026 Jekaterinburg
Phone +7 / 343 / 378 31 75
Fax +7 / 343 / 378 31 89
Konstantin.Molokov@ru.ebmpapst.com
www.ebmpapst.ur.ru

ebm-papst Rus GmbH
Nizhegorodskaya 32, str. 15 office 420
RU-109029 Moskau
Phone +7 / 495 / 671 53 93
Fax +7 / 495 / 671 53 95
info@ebmpapst.ru
www.ebmpapst.ru

ebm-papst Rus
Saint-Petersburg´s Filial
Zastavskaya 7
RU-196084 Sankt-Petersburg
Phone +7 / 812 / 449 96 07
Fax +7 / 812 / 449 96 07
spb@ru.ebmpapst.com

Serbia & Montenegro
ebm-papst Industries Kft.
Mátyás u. 1/A
H-2220 Vecsés
Phone +36 / 29 / 55 01 90
Fax +36 / 29 / 55 01 94
office@hu.ebmpapst.com
www.ebmpapst.hu

Spain
ebm-papst Ibérica S.L.
Avda. del Sistema Solar, 29
E-28830 San Fernando de Henares (Madrid)
Phone +34 / 91 / 678 08 94
Fax +34 / 91 / 678 15 30
ventas@ebmpapst.es

Sweden
Ziehl-ebm AB
Äggelundavägen 2
S-17562 Järfälla
Phone +46 / 8 / 761 94 00
Fax +46 / 8 / 36 23 06
info@ebmpapst.se
www.ebmpapst.se

Switzerland
ebm-papst AG
Rütisbergstraße 1
CH-8156 Oberhasli
Phone +41 / 44 / 732 20 70
Fax +41 / 44 / 732 20 77
verkauf@ebmpapst.ch
www.ebmpapst.ch

Turkey
Akantel Elektronik San. Tic. LTD. Sti.
Atatürk Organize Sanayi
Bölgesi 10007 SK. No.:6
TR-35620 Cigli-Izmir
Phone +90 / 2 32 / 32 82 090 -91
Fax +90 / 2 32 / 32 80 270
akantel@akantel.com.tr
www.akantel.com.tr

Ukraine
ebm-papst Ukraine LLC
Lepse Boulevard, 4, Building 47
UA-03067 Kiev
Phone +38 / 044 / 206 30 91
Fax +38 / 044 / 206 30 91
mail@ebmpapst.ua
www.ebmpapst.ua

United Kingdom
ebm-papst UK Ltd.
Chelmsford Business Park
GB-Chelmsford Essex CM2 5EZ
Phone +44 / 12 45 / 46 85 55
Fax +44 / 12 45 / 46 63 36
sales@uk.ebmpapst.com
www.ebmpapst.co.uk

ebm-papst Automotive & Drives (UK) Ltd.
The Smithy
Fidlers Lane, East Ilsley
GB-Berkshire RG20 7LG
Phone +44 / 87 07 / 66 51 70
Fax +44 / 87 07 / 66 51 80
A&Dsales@uk.ebmpapst.com
www.ebmpapst-ad.com

America

Argentinia
ebm-papst de Argentina S.A.
Hernandarias 148 Lomas del Mirador
Pcia. de Buenos Aires (1752)
Phone +54 / 11 46 57 61 35
Fax +54 / 11 46 57 20 92
ventas@ar.ebmpapst.com

Brasil
ebm-papst Motores Ventiladores Ltda.
Rua Francisco D´Amico, 155
Bairro Pirajussara
BR-06785-290 Taboão da Serra-SP
Phone +55 /11 / 41 38 50 90
Fax +55 /11 / 41 38 50 86
vendas@br.ebmpapst.com
www.ebmpapst.com.br

Canada
ebm-papst Canada Inc.
1800 Ironstone Manor, Unit 2
CDN-Pickering, Ontario, L1W3J9
Phone +1 / 905 / 420 / 35 33
Fax +1 / 905 / 420 / 37 72
sales@ca.ebmpapst.com
www.ebmpapst.ca

Mexico
ebm Industrial S.de R.L. de C.V.
Paseo de Tamarindos 400-A-5to Piso
Col. Bosques de las Lomas
MEX-Mexico 05120, D.F.
Phone +52 / 55 / 50 91 44 44
Fax +52 / 55 / 50 91 44 43
sales@mx.ebmpapst.com
www.ebmpapst.com.mx

USA
ebm-papst Inc.
P.O. Box 4009
100 Hyde Road
USA-Farmington, CT 06034
Phone +1 / 860 / 674 15 15
Fax +1 / 860 / 674 85 36
sales@us.ebmpapst.com
www.ebmpapst.us

ebm-papst Automotive & Drives, Inc.
3200 Greenfield, Suite 255
USA-Dearborn, MI 48120
Phone +1 / 313 / 406 80 80
Fax +1 / 313 / 406 80 81
automotive@us.ebmpapst.com
www.ebmpapst-automotive.us

Africa

South Africa
ebm-papst South Africa (Pty) Ltd.
P.O. Box 3124
1119 Yacht Avenue
ZA-2040 Honeydew
Phone +27 / 11 / 794 34 34
Fax +27 / 11 / 794 50 20
info@za.ebmpapst.com
www.ebmpapst.co.za

fan agent
compact fan agent
motor specialist
motor agent

Distributors, agencies and subsidiaries

Asia

China
ebm-papst Ventilator (Shanghai) Co., Ltd.
No. 418, Huajing Road
WaiGaoQiao Free Trade Zone
No. 2001, Yang Gao (N) Road
VRC-200131 Shanghai, P.R. of China
Phone +86 / 21 / 50 46 01 83
Fax +86 / 21 / 50 46 11 19
sales@cn.ebmpapst.com

Hong Kong
ebm-papst Ventilator (Shanghai) Co., Ltd.
Hong Kong Representative Office
Unit Nos. 13, 9/F, Technology Park
18 On Lai Street, Sha Tin, N.T.
HK-Hong Kong P.R. of China
Phone +852 / 21 45 / 86 78
Fax +852 / 21 45 / 76 78
chenghong@cn.ebmpapst.com

India
ebm NADI International Pvt Ltd.
26/3, G.N.T. Road, Erukkencherry
IND-Chennai-600118
Phone +91 / 44 / 25 37 25 56
Fax +91 / 44 / 25 37 11 49
ebmnadi@md2.vsnl.net.in
www.ebmnadi.com

Indonesia
ebm-papst Indonesia
Representative Office
Jalan Puri Kencana, Blok K7/3T
RI-Jakarta 11610
Phone +62 / 21 / 582 / 31 18
Fax +62 / 21 / 582 / 31 17
sonny.sanjaya@id.ebmpapst.com

Israel
Polak Bros. Import Agencies Ltd.
9 Hamefalsim Street
IL-Kiryat Arie, Petach-Tikva 49514
Phone +972 / 3 / 910 03 00
Fax +972 / 3 / 579 66 79
polak@polak.co.il

Japan
ebm-papst Industries Japan K.K.
12 Floor, Benex S-3 Bldg.
3-20-8 Shinyokohama, Kohoku-ku
J-222-0033 Yokohama
Phone +81 / 45 / 470 / 57 51
Fax +81 / 45 / 470 / 57 52
info@jp.ebmpapst.com
www.ebmpapst.jp

Korea
ebm-papst Korea Co. Ltd.
6F, Trutec Bldg.
B 6-2, Digital Media City (DMC)
Sangam-Dong, Mapo-Gu
ROK-Seoul 121-270
Phone +82 / 2 / 36 62 / 13 24
Fax +82 / 2 / 36 62 / 13 26
info@kr.ebmpapst.com
www.ebmpapst.co.kr

Malaysia
ebm-papst Malaysia
Representative Office
Block F1, 9A-4, Jalan PJU 1/42
Dataran Prima
MAL-47301 Petaling Jaya
Phone +60 / 3 / 78 06 54 40
Fax +60 / 3 / 78 06 54 41
john.bulder@my.ebmpapst.com

Singapore
ebm-papst SEA Pte. Ltd.
23 Ubi Road 4, #05-00
Olympia Industrial Building
SGP-Singapore 408620
Phone +65 / 68 42 84 38
Fax +65 / 68 42 84 39
salesdept@sg.ebmpapst.com

Taiwan
ETECO Engineering & Trading Corp.
10F-I, No. 92, Teh-Wei Str.
RC-Tsow-Inn District, Kaohsiung
Phone +886 / 7 / 557 42 68
Fax +886 / 7 / 557 27 88
eteco@ms22.hinet.net

Thailand
ebm-papst Thailand Co. Ltd.
Representative Office
99/349 Chaeng Wattana Road, Laksi
Bangkok 10210, Thailand
Phone +66 / 2 / 576 / 15 24-5
Fax +66 / 2 / 576 / 15 42
salesdept@th.ebmpapst.com

United Arab Emirates
ebm-papst Middle East FZE
PO Box 17755
Jebel Ali Free Zone / FZS1 / AP05
UAE-Dubai
Phone +971 / 4 / 886 08 26
Fax +971 / 4 / 886 08 27
info@ae.ebmpapst.com

Australia

Australia
ebm-papst Australia Pty Ltd.
2 Silverton Close
AUS-Laverton North, Victoria, 3026
Phone +61 / 3 / 83 25 64 00
Fax +61 / 3 / 83 25 64 64
sales@ebmpapst.com.au
www.ebmpapst.com.au

New Zealand
ebm-papst Australia Pty Ltd.
102 Henderson Valley Road
NZ-Henderson, Auckland 1230
Phone +64 / 9 / 837 18 84
Fax +64 / 9 / 837 18 99
sales@ebmpapst.com.au
www.ebmpapst.com.au

37779-7-8811 • KO-08/07-10,8'
Printed in Germany

ebm-papst
Mulfingen GmbH & Co. KG

Bachmühle 2
D-74673 Mulfingen
Phone +49 (0) 7938 / 81-0
Fax +49 (0) 7938 / 81-110
info1@de.ebmpapst.com

ebm-papst
St. Georgen GmbH & Co. KG

Hermann-Papst-Straße 1
D-78112 St. Georgen
Phone +49 (0) 7724 / 81-0
Fax +49 (0) 7724 / 81-1309
info2@de.ebmpapst.com

ebm-papst
Landshut GmbH

Hofmark-Aich-Straße 25
D-84030 Landshut
Phone +49 (0) 871 / 707-0
Fax +49 (0) 871 / 707-465
info3@de.ebmpapst.com

www.ebmpapst.com

ebmpapst