	PARTS NAME	MATERIAL	UL FLAME GRADE
1	Sensing cap	Aluminum	
2	Actuating pin	Ceramic	
3	Bimetal disc	Bimetal	
4	Retainer	PPS	
5	Stationary arm	Brass tin plated	
6	Solder	Tin	
7	Glue	Epoxy	
8	Terminal	Brass tin plated	
9	Movable arm	Beryllium copper	
10	Terminal-J	Brass tin plated	
11	Case	PPS	
12	Contact-R	Silver alloy	
13	Contact-F	Silver alloy	
14	Bracket	Steel Nickel plated	

SPECIFICATIONS

* CONTACT TYPE : Normally Open
* ACTION TEMP : 60°C ± 3K
* RESET TEMP : 45°C ± 4K
* TERMINAL SIZE : Amp #250 TAB
* CIRCUIT RESISTANCE : 50mΩ MAX.
* INSULATION RESISTANCE : 100MΩ min. at DC 500V
* DIELECTRIC STRENGTH : AC 1000V For One Minute
  Or AC 1800V For One Sec
* APPROVALS: VDE UL CUL
* ELECTRICAL RATING & OPERATING LIFE :
  VDE - 15A 240VAC 100,000 Cycles (Resistive Load
  16A 250VAC 10,000 Cycles (Resistive Load)
  Licence No. 127475
  (By Standard Differential:10k~15k)
  UL CUL - 15A 120VAC 100,000 Cycles (Resistive Load)
  Licence No. E192925
  (By Standard Differential:10k~15k)

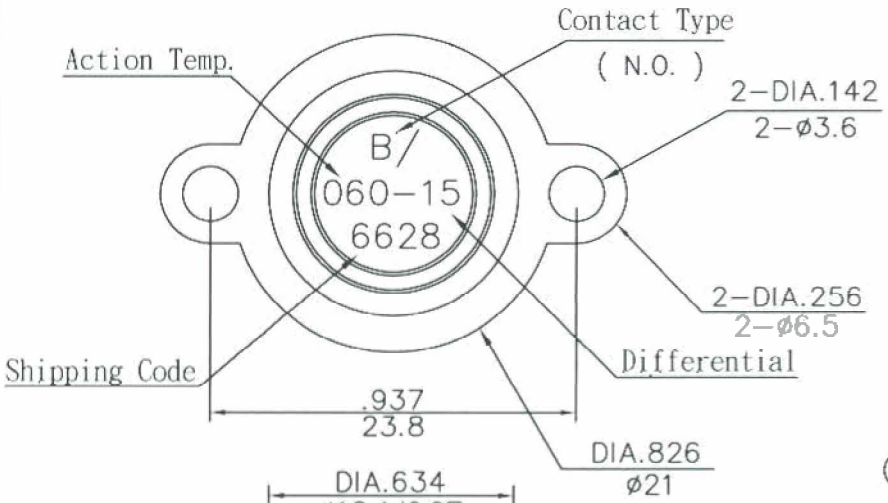

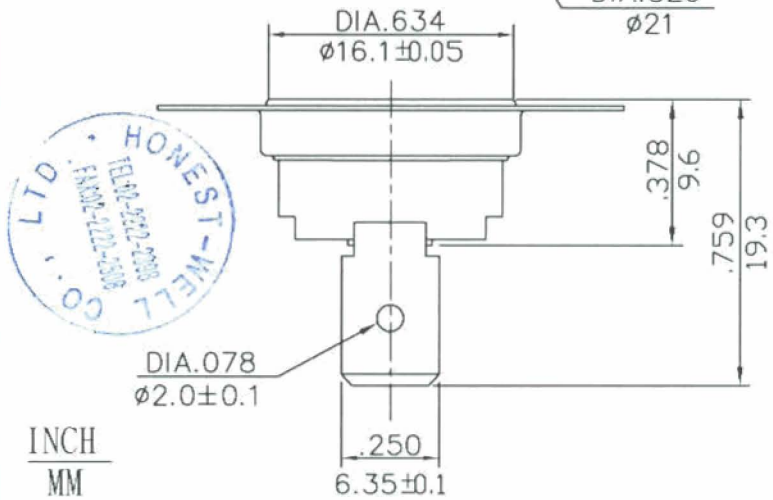

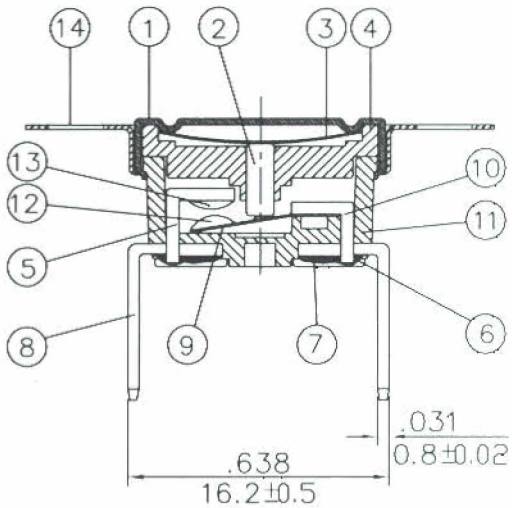

SCALE	2:1 (mm)

The size remains unchanged, but other technical modification will be made without notice.

REV	DESCRIPTION	DFTG.	DATE
4			
3			
2			
1			

TITLE	3B-SR2
FULL CODE	T23B060ASR2-15
MATERIAL NO.	1006852
CUSTOMER	PREMIER
DRAWING NO.	782020

DFTG	CHKD	SALES	MFG.	APRVL
FALCO		洪青雲	洪基淳	廖大光

HONEST-WELL CO., LTD.