KEMET Part Number: M39003/11-3032U

(T266D157M015CS0100, CSS21D157MCU)

T266 CSS21, Tantalum, MnO2 Tantalum, Space, 150 uF, 20%, 15 VDC, 100 mOhms

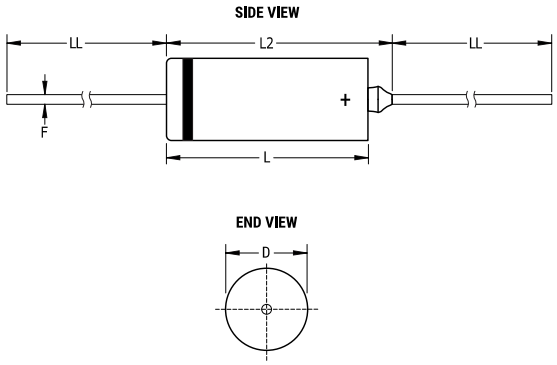

Dimensions	
D	8.66mm +0.41/-0.38mm
L	19.05mm +/-0.79mm
L2	23.42mm MAX
LL	38.1mm +/-6.35mm
F	0.64mm +/-0.05mm

Packaging Specifications	
Packaging:	Tray
Packaging Quantity:	20

General Information	
Series:	T266 CSS21
Dielectric:	MnO2 Tantalum
Style:	Axial Hermetic
Description:	Axial, Solid Tantalum, Hermetically Sealed, Military, CSS21 Style
RoHS:	No
Prop 65:	**WARNING:** Cancer and reproductive harm - www.p65warnings.ca.gov.
REACH:	SVHC (Pb – CAS 7439-92-1)
Termination:	Lead (SnPb)
Lead:	Wire Leads
Qualifications:	CSS21
AEC-Q200:	No
Construction:	Hermetic

Specifications	
Capacitance:	150 uF
Capacitance Tolerance:	20%
Voltage DC:	15 VDC (85C)
Temperature Range:	-55/+125°C
Rated Temperature:	85°C
Dissipation Factor:	8% 1kHz 25C
Failure Rate:	C (0.01%/1000 Hrs)
Resistance:	0.1 Ohms (100kHz)
Leakage Current:	10 uA

Statements of suitability for certain applications are based on our knowledge of typical operating conditions for such applications, but are not intended to constitute - and we specifically disclaim - any warranty concerning suitability for a specific customer application or use. This Information is intended for use only by customers who have the requisite experience and capability to determine the correct products for their application. Any technical advice inferred from this Information or otherwise provided by us with reference to the use of our products is given gratis, and we assume no obligation or liability for the advice given or results obtained.

© 2006 - 2020 KEMET