FIBOX MNX PCM 125/125 G

Sample photo

Order symbol:	PCM 125/125 G	**EAN:**	6418074038067
Product nbr:	6016310	**El. number:**	
		Finland	3421638
Description:	Enclosure, PC	Denmark	8212027129
Remarks:	Grey cover	Italy	7341035
		Sweden	2535321

Including: Base with metric knock-outs and TPE gasket and screws for mounting plate/DIN-rail, cover with polyamide cover screws and wing heads for cover screws.

Dimensions:

	L	W	H
mm:	130	130	125
inch:	5.1	5.1	4.9

Materials:

Material:	PC
Base colour:	RAL 7035
Cover colour:	RAL 7035
Cover screws material:	Polyamide
Cover screws colour:	Grey
Gasket material:	TPE

Temperatures:

Short term:	-40 … 120 °C
Continuous:	-40 … 80 °C
Short term:	-40 … 250 °F
Continuous:	-40 … 175 °F

Accessories:

MIV 125	Mounting plate
MIN 10	DIN-15 Mounting rail
MIV 10	DIN-35 Mounting rail
FP A 125/130	Front plate
HFP 130	Front plate hinge series

Rating:

Ingress Protection (EN 60529): IP 66/67
Impact Resistance (EN 50102): IK 08
Electrical insulation: Totally insulated
Halogen free (DIN/VDE 0472, Part 815): Yes
UV resistance: UL 508
Flammability Rating (UL 746 C 5): UL 94 5V
Glow Wire Test (IEC 695-2-1) °C: 960
NEMA Class: NEMA 1, 4, 4X, 6

Certificates:

Germanischer Lloyd (GL)
Underwriters Laboratories
Det Norske Veritas
Fimko
Europe EN 50298 1998
UL Canada
Gost R

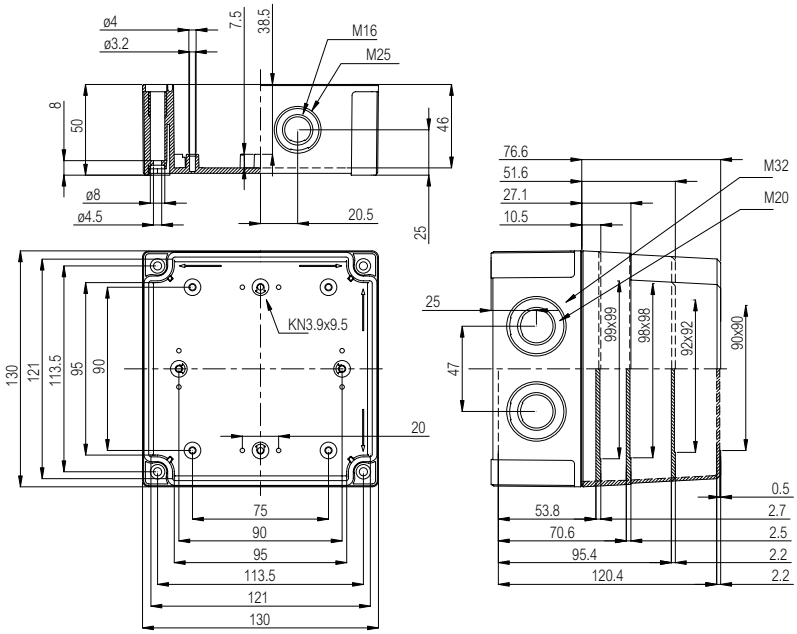

(c) Fibox OY, Data subject to change without notice