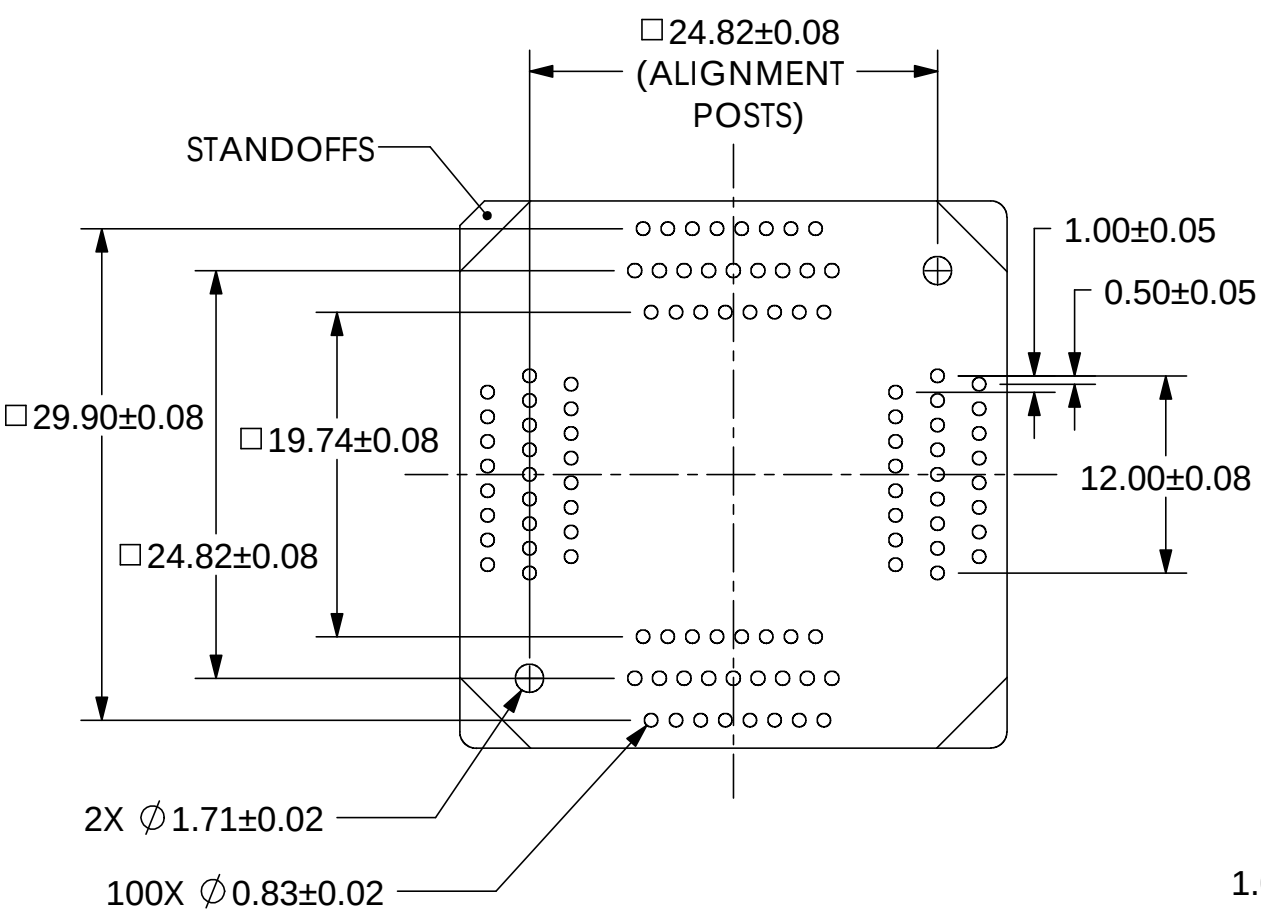

RECOMMENDED PCB HOLE PATTERN LAYOUT
(TOP VIEW LOOKING DOWN THROUGH SOCKET)

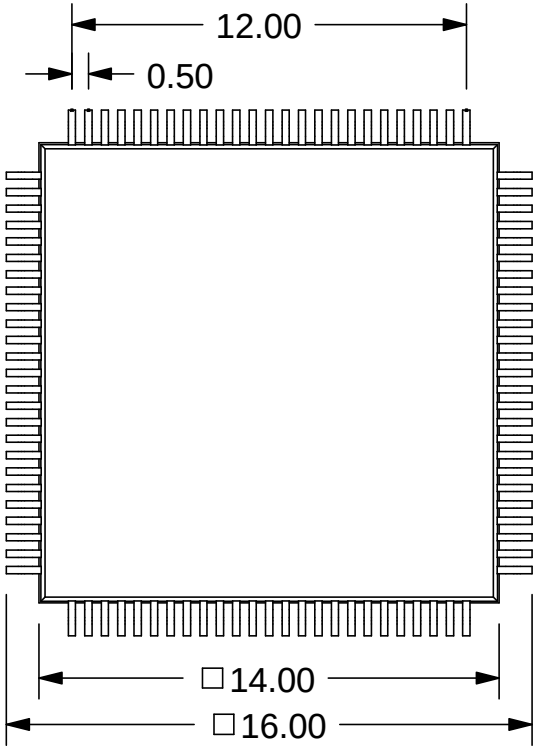

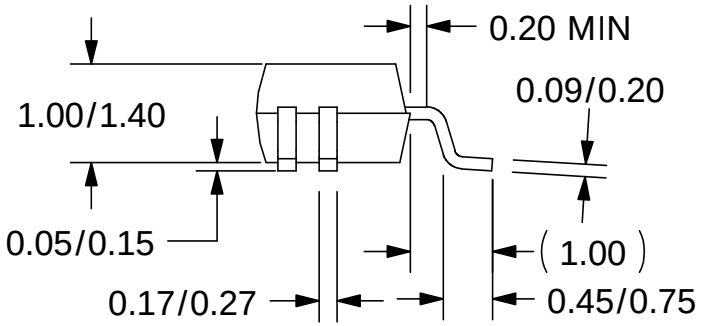

REV	DATE	BY	ECN #
A	9/17/01	PH	DR. & REL.
A1	1/11/02	PH	02-0006

A	C	P
-	-	X

LEGEND

◇ CRITICAL

0 TOTAL NO. OF ◇ USED

SIZE: A

PROJECTION

THIS DOCUMENT CONTAINS PROPRIETARY INFORMATION THAT IS THE SOLE PROPERTY OF WELLS-CTI. THIS INFORMATION IS TO BE HELD BY ITS RECIPENT ON A CONFIDENTAL BASIS , AND IS NOT TO BE DISCLOSED TO OTHERS OR USED WITHOUT WRITTEN CONSENT OF WELLS-CTI.

DO NOT SCALE

MATERIAL / FINISH

REFERENCE: -

PROJECT / SERIES: 3000

TOLERANCES
X.X ± 0.3
X.XX ± 0.08
X.XXX ---
ANGLE ± 1°

DRAWN	PH	DATE	9/17/01
CHECKED	EP	DATE	9/17/01
ENGINEER	PH	DATE	9/17/01

WELLS-CTI
A subsidiary of PCD inc.
PHOENIX ARIZONA USA

PART NAME
SOCKET FOOTPRINT & DEVICE
14mm, 100 ld., 0.50 c/c

PART NUMBER: F3014-100
REV.: A1

SCALE: 2:1
UNITS: mm [in]

CAD NUMBER: F3014-100.SLDDRW
SHEET 1 OF 1