ABP2 SERIES

32350268
Issue A

Board Mount Pressure Sensors

High Accuracy, Compensated/Amplified
4 bar to 12 bar | 400 kPa to 1.2 MPa | 60 psi to 175 psi
Digital Output, Liquid Media Capable

DESCRIPTION

The ABP2 Series are piezoresistive silicon pressure sensors offering a digital output for reading pressure over the specified full scale pressure span and temperature range. They are calibrated and temperature compensated for sensor offset, sensitivity, temperature effects and accuracy errors (which include non-linearity, repeatability and hysteresis) using an on-board Application Specific Integrated Circuit (ASIC). Calibrated output values for pressure and temperature are updated at approximately 200 Hz. All products are designed and manufactured according to ISO 9001 standards. The liquid media option includes an additional silicone-based gel coating to protect the electronics under port P1, which enables use with non-corrosive liquids (e.g. water and saline) and in applications where condensation can occur. The ABP2 Series is available in tube packaging. Pocket tape and reel packaging is available upon request.

VALUE TO CUSTOMERS

- Simplifies design-in: Small size saves room on the PC board (PCB), simplifying design in smaller and lower power devices. Meets IPC/JEDEC J-STD-020E Moisture Sensitivity Level 1 requirements :
  - Allows avoidance of thermal and mechanical damage during solder reflow attachment and/or repair that lesser rated sensors may incur.
  - Allows unlimited floor life when stored as specified (simplifying storage and reducing scrap).
  - Eliminates lengthy bakes prior to reflow.
  - Allows for lean manufacturing due to stability and usability shortly after reflow.
- Cost-effective: Small size helps engineers reduce design and manufacturing costs while maintaining enhanced performance and reliability of the systems they design.
- Accurate: Total Error Band (TEB) and wide pressure range enable engineers to optimize system performance by improving resolution and system accuracy.
- Flexible: Supply voltage range, variety of pressure units, types and ranges, output options, and wide operating temperature range simplify use in the application
- Versatile: Wet-media compatibility, low power, and temperature output options make the sensor a versatile choice for Internet of Things applications

DIFFERENTIATION

- Application-specific design ensures suitability for a wide array of customer requirements.
- Digital output allows the sensor to be directly plugged into the customer's circuitry without requiring major design changes
- Total Error Band (See Figure 1.):
  - Provides true performance over the compensated temperature range, minimizing the need to test and calibrate every sensor, thereby potentially reducing manufacturing costs
  - Improves sensor accuracy
  - Offers ease of sensor interchangeability due to minimal part-to-part variation

POTENTIAL APPLICATIONS

- **Medical:** Ventilators/portable ventilators, CPAP, blood analysis, blood pressure monitoring, breast pumps, drug dosing, hospital beds, massage machines, oxygen concentrators, patient monitoring, sleep apnea equipment, urine analyzers and wound therapy
- **Industrial:** HVAC transmitters, life sciences, material handling, pneumatic control and regulation, process gas monitoring and valve positioning/ positioners
- **Commercial:** Air beds, coffee makers, washing machines, level measurement, dish washers, vacuum cleaners, hand dryers and rice cookers
- **Transportation:** Air brakes, CNG monitoring, fork lifts and fuel level measurement

FEATURES

- Total Error Band (see Figure 1): As low as ±1.5 %FSS
- Liquid media option: Compatible with a variety of liquid media
- Long-term stability: ±0.25 %FSS
- Accuracy: ±0.25 %FSS BFSL
- Wide pressure range: 4 bar to 12 bar | 400 kPa to 1.2 MPa | 60 psi to 175 psi
- High burst pressures (see Table 9.)
- Wide operating temperature range of -40°C to 110°C [-40°F to 230°F]
- Calibrated over wide temperature range of -40°C to 110°C [-40°F to 230°F]
- 24-bit digital I^2C or SPI-compatible output
- IoT (Internet of Things) ready interface
- Ultra-low power consumption (as low as 0.01 mW typ. average power, 1 Hz measurement frequency)
- Meets IPC/JEDEC J-STD-020E Moisture Sensitivity Level 1
- REACH and RoHS compliant
- Food grade compatible
- NSF-169, LFGB and BPA compliant materials
- Temperature output available

Honeywell offers a variety of board mount pressure sensors for use in potential medical and industrial applications. To view the entire product portfolio, click here.

Honeywell

Table of Contents

Total Error Band 2
General Specifications 3-4
Power Consumption and Standby Mode 5-6
Nomenclature and Order Guide 7
Pressure Range Specifications 8
Dimensional Drawings 9
1.0 General Information 10
2.0 Pinout and Functionality 10
3.0 Start-Up Timing 10
4.0 Power Supply Requirement 10
5.0 Reference Circuit Design
5.1 I²C and SPI Circuit Diagrams 11
5.2 Bypass Capacitor Use 11
6.0 I²C Communications
6.1 I²C Bus Configuration 12
6.2 I²C Data Transfer 12
6.3 I²C Sensor Address 12
6.4 I²C Pressure and Temperature Reading 12
6.5 I²C Status Byte 13
6.6 I²C Communications 13
6.6.1 Output Measurement Command 13
6.6.2 I²C Sensor Address of 0x28 14
6.7 I²C Timing and Level Parameters 14
6.8 Reference Code (Arduino/Genuino Uno) for I²C Interface 15
7.0 SPI Communications
7.1 SPI Definition 16
7.2 SPI Data Transfer 16
7.3 SPI Pressure and Temperature Reading 16
7.4 SPI Status Byte 17
7.5 SPI Communications 17
7.6 SPI Timing and Level Parameters 18
7.7 Reference Code (Arduino/Genuino Uno) for SPI Interface 19
8.0 ABP2 Series Calculations
8.1 Pressure Ouput 20
8.2 Temperature Output 21
Additional Information ..... back

TOTAL ERROR BAND

Total Error Band (TEB) is a single specification that includes the major sources of sensor error, as shown in Figure 1. TEB should not be confused with accuracy, which is actually a component of TEB. TEB is the maximum error that the sensor could experience.

Honeywell uses the TEB specification in its datasheet because it is the most comprehensive measurement of a sensor's true accuracy. Honeywell also provides the accuracy specification in order to provide a common comparison with competitors' literature that does not use the TEB specification.

Many competitors do not use TEB—they simply specify the accuracy of their device. Their accuracy specification, however, may exclude certain parameters. On their datasheet, the errors are listed individually. When combined, the total error (or what would be TEB) could be significant.

FIGURE 1. TOTAL ERROR BAND

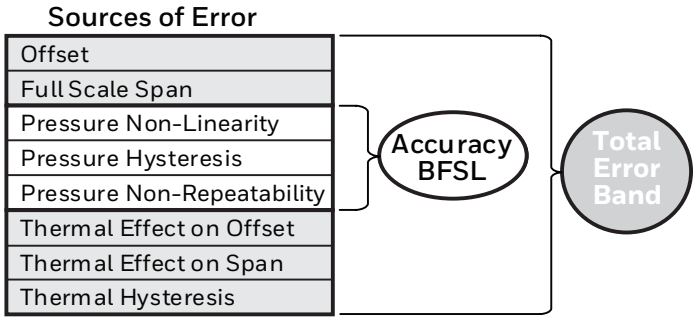

TABLE 1. ABSOLUTE MAXIMUM SPECIFICATIONS[1]

CHARACTERISTIC	MINIMUM	MAXIMUM	UNIT
Supply voltage (V_{supply})	-0.3	3.6	Vdc
Voltage on any pin	-0.3	V_{supply} + 0.3	Vdc
Digital clock frequency: I²C SPI	 100 50	 400 800	kHz
ESD susceptibility (human body model)	—	4	kV
Storage temperature range	-40 [-40]	125 [257]	°C [°F]
Soldering time and temperature, peak reflow temperature (Leadless SMT)	15 s max. at 250 °C [482 °F]		

[1]Absolute maximum ratings are the extreme limits the device will withstand without damage.

TABLE 2. OPERATING SPECIFICATIONS

CHARACTERISTIC	MINIMUM	TYPICAL	MAXIMUM	UNIT
Supply voltage (V_{supply})[1]	1.8	3.3	3.6	Vdc
Current consumption: I²C sleep/standby mode SPI sleep/standby mode	 3.0 13.0	 33.8 43.8	 211.0 221.0	nA
Power consumption	—	3.1	—	mW
Operating temperature range[2]	-40 [-40]	—	110 [230]	°C [°F]
Compensated temperature range[3]	-40 [-40]	—	110 [230]	°C [°F]
Startup time (power up to data ready)[4]	—	7.5	—	ms
Data rate (assumes command AA_{HEX})	161	204	—	samples/s
SPI/I²C voltage level: low high	 — 80	 — —	 20 —	$\%V_{supply}$
Pull up on SDA, SCL	1	—	—	kOhm
Total Error Band[5]: 0°C to 50°C -20°C to 85°C -40°C to 110°C	 — — —	 — — —	 ±1.5 ±3.0 ±4.5	 %FSS[6] %FSS[6] %FSS[6]
Accuracy[7]	—	—	±0.25	%FSS BFSL
Resolution	14	—	—	bits
Temperature output error[8]	—	±5	—	°C

[1]Sensors are not reverse polarity protected. Incorrect application of supply voltage or ground to the wrong pin may cause electrical failure.

[2]**Operating temperature range:** The temperature range over which the sensor will produce an output proportional to pressure.

[3]**Compensated temperature range:** The temperature range over which the sensor will produce an output proportional to pressure within the specified performance limits (see Total Error Band).

[4]**Startup time:** Based on 2.5 ms for power up to receive the first measurement command and average measurement time of 5 ms (data rate of 204 samples per second). Refer to Section 3.0, Tables 13, 14 and 17 for further details of communication timing.

[5]**Total Error Band:** The maximum deviation from the ideal transfer function over the entire compensated temperature and pressure range. Includes all errors due to offset, full scale span, pressure non-linearity, pressure hysteresis, repeatability, thermal effect on offset, thermal effect on span and thermal hysteresis.

[6]**Full Scale Span (FSS):** The algebraic difference between the output signal measured at the maximum (Pmax.) and minimum (Pmin.) limits of the pressure range. (See Figure 2.)

[7]**Accuracy:** The maximum deviation in output from a Best Fit Straight Line (BFSL) fitted to the output measured over the pressure range at 25°C [77°F]. Includes all errors due to pressure non-linearity, pressure hysteresis and non-repeatability.

[8]**Temperature Output Error:** The error in Temperature Output reading relative to a thermal reference standard over a temperature range of -40°C to 125°C.

TABLE 3. ENVIRONMENTAL SPECIFICATIONS

CHARACTERISTIC	PARAMETER
Humidity: all external surfaces internal surfaces of liquid media option "T"	 0 %RH to 95 %RH, non-condensing 0 %RH to 100 %RH, condensing
Vibration	15 g, 10 Hz to 2 kHz
Shock	75 g, 6 ms duration
Life[1]	1 million full scale pressure cycles minimum
Solder reflow	J-STD-020-E Moisture Sensitivity Level 1 (unlimited shelf life when stored at <30°C/85 %RH)

[1]Life may vary depending on specific application in which the sensor is utilized.

TABLE 4. WETTED MATERIALS[1]

COMPONENT	MATERIAL[1]
Ports and covers	high temperature polyamide, 304 SST
Substrate	—
Adhesives	epoxy, silicone gel
Electronic components	—

[1]Contact Honeywell customer service for detailed material information.

TABLE 5. SENSOR PRESSURE TYPES

PRESSURE TYPE	DESCRIPTION
Gage	Output is proportional to the difference between applied pressure and atmospheric (ambient) pressure.

TABLE 6. SENSOR OUTPUT AT SIGNIFICANT PERCENTAGES

%OUTPUT	DIGITAL COUNTS	
	DECIMAL	HEX
0	0	0X000000
10	1677722	0X199999
50	8388608	0X800000
90	15099494	0XE66666
100	16777215	0XFFFFFF

FIGURE 2. TRANSFER FUNCTION LIMITS

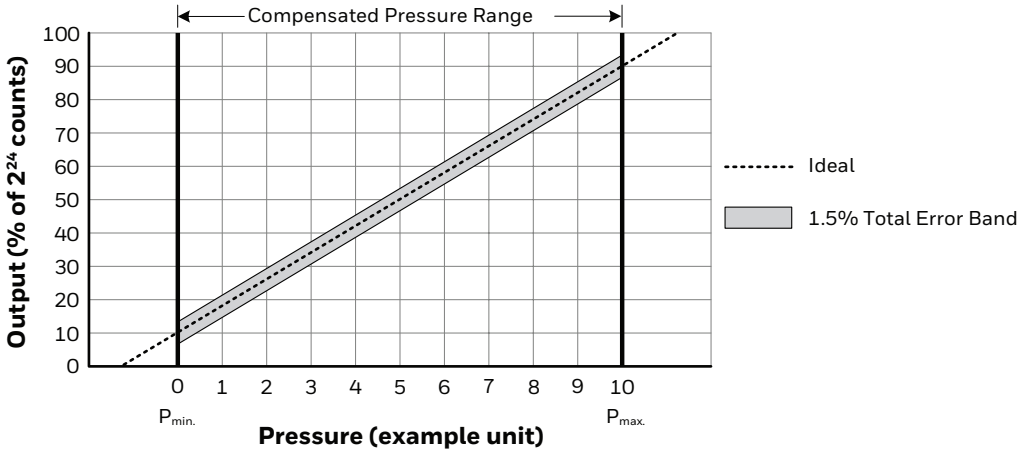

$$\text{Output (\% of } 2^{24} \text{ counts)} = \frac{80\%}{P_{max.} - P_{min.}} \times (\text{Pressure}_{applied} - P_{min.}) + 10\%$$

POWER CONSUMPTION AND STANDBY MODE

The sensor is normally in Standby Mode and is only turned on in response to a user command, thus minimizing power consumption. Upon receiving the user command, the sensor wakes up from Standby Mode, runs a measurement in Active State, and automatically returns to Standby Mode, awaiting the next command. The resulting sensor power consumption is a function of the sampling rate (samples per second) as shown in Tables 7 and 8 and Figures 3 and 4.

TABLE 7. AVERAGE POWER CONSUMPTION AT 1.8 V_{SUPPLY} (ASSUMES COMMAND AA_{HEX})

SAMPLING RATE (samples per second)	AVERAGE POWER (mW)	ACTIVE TIME (ms)	ACTIVE POWER (mW)	IDLE TIME (ms)	IDLE POWER (mW)
Minimum Average Power					
1	0.0068	3.625	1.884	996.375	0.0000054
2	0.0137	7.25	1.884	992.75	0.0000054
5	0.0341	18.125	1.884	981.875	0.0000054
10	0.0683	36.25	1.884	963.75	0.0000054
20	0.1366	72.5	1.884	927.5	0.0000054
50	0.3414	181.25	1.884	818.75	0.0000054
100	0.6829	362.5	1.884	637.5	0.0000054
160	1.0926	580	1.884	420	0.0000054
Typical Average Power					
1	0.0094	4.157	2.248	995.843	0.00006084
2	0.0187	8.314	2.248	991.686	0.00006084
5	0.0468	20.785	2.248	979.215	0.00006084
10	0.0935	41.57	2.248	958.43	0.00006084
20	0.1870	83.14	2.248	916.86	0.00006084
50	0.4673	207.85	2.248	792.15	0.00006084
100	0.9345	415.7	2.248	584.3	0.00006084
160	1.4592	665.12	2.248	334.88	0.00006084
Maximum Average Power					
1	0.0129	4.839	2.588	995.161	0.0003798
2	0.0254	9.678	2.588	990.322	0.0003798
5	0.0630	24.195	2.588	975.805	0.0003798
10	0.1256	48.39	2.588	951.61	0.0003798
20	0.2508	96.78	2.588	903.22	0.0003798
50	0.6264	241.95	2.588	758.05	0.0003798
100	1.2524	483.9	2.588	516.1	0.0003798
160	2.0036	774.24	2.588	225.76	0.0003798

FIGURE 3. AVERAGE POWER CONSUMPTION VS SAMPLING RATE AT 1.8 V_{SUPPLY}

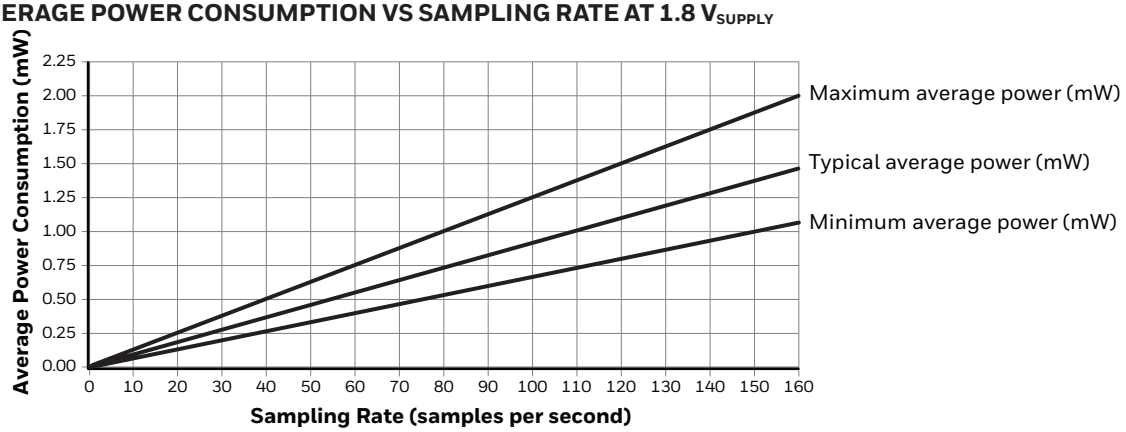

TABLE 8 . AVERAGE POWER CONSUMPTION AT 3.3 V_{SUPPLY} (ASSUMES COMMAND AA_{HEX})

SAMPLING RATE (samples per second)	AVERAGE POWER (mW)	ACTIVE TIME (ms)	ACTIVE POWER (mW)	IDLE TIME (ms)	IDLE POWER (mW)
Minimum Average Power					
1	0.0114	3.625	3.134	996.375	0.0000099
2	0.0227	7.25	3.134	992.75	0.0000099
5	0.0568	18.125	3.134	981.875	0.0000099
10	0.1136	36.25	3.134	963.75	0.0000099
20	0.2272	72.5	3.134	927.5	0.0000099
50	0.5680	181.25	3.134	818.75	0.0000099
100	1.1361	362.5	3.134	637.5	0.0000099
160	1.8177	580	3.134	420	0.0000099
Typical Average Power					
1	0.0156	4.157	3.729	995.843	0.00011154
2	0.0311	8.314	3.729	991.686	0.00011154
5	0.0776	20.785	3.729	979.215	0.00011154
10	0.1551	41.57	3.729	958.43	0.00011154
20	0.3101	83.14	3.729	916.86	0.00011154
50	0.7751	207.85	3.729	792.15	0.00011154
100	1.5501	415.7	3.729	584.3	0.00011154
160	2.4800	665.12	3.729	334.88	0.00011154
Maximum Average Power					
1	0.0214	4.839	4.275	995.161	0.0006963
2	0.0421	9.678	4.275	990.322	0.0006963
5	0.1041	24.195	4.275	975.805	0.0006963
10	0.2075	48.39	4.275	951.61	0.0006963
20	0.4144	96.78	4.275	903.22	0.0006963
50	1.0349	241.95	4.275	758.05	0.0006963
100	2.0692	483.9	4.275	516.1	0.0006963
160	3.3103	774.24	4.275	225.76	0.0006963

FIGURE 4. AVERAGE POWER CONSUMPTION VS SAMPLING RATE AT 3.3 V_{SUPPLY}

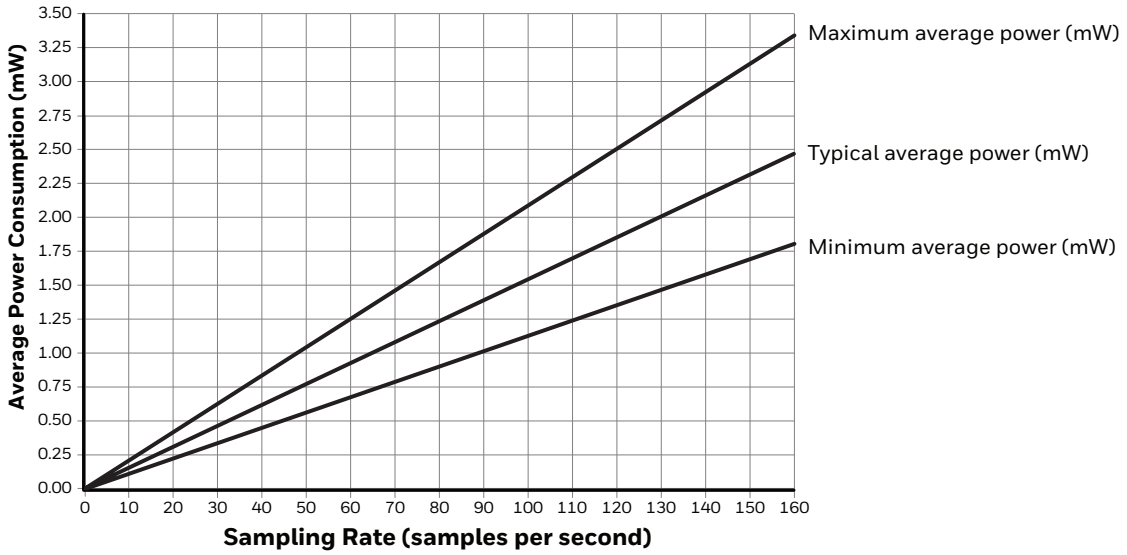

BASIC BOARD MOUNT PRESSURE SENSORS, ABP2 SERIES

FIGURE 5. NOMENCLATURE AND ORDER GUIDE

For example, **ABP2LANT060PG2A3XX** defines an ABP2 Series Amplified Basic pressure sensor, leadless SMT, plastic single axial barbed port, liquid media, food grade gel, no diagnostics, 60 psi gage pressure range, digital I²C output, address 0x28, 10% to 90% of 2^{24} counts transfer function, 1.8 Vdc to 3.6 Vdc supply voltage

ABP2 L AN T 060PG 2 A 3 XX

Product Series

ABP2	Amplified Basic

Package

L	Leadless SMT

Pressure Port

Leadless SMT

Plastic	AN	Single axial, barbed port 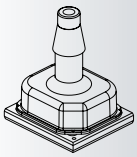
Metal	SN	Single axial, barbless port 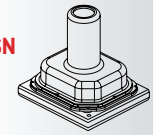

Option

T	Liquid media, food grade gel, no diagnostics

Future

XX	

Supply Voltage

3	1.8 Vdc to 3.6 Vdc

Transfer Function

A	10% to 90% of 2^{24} counts

Output Type

S	SPI	4	I²C, Address 0x48
0	I²C, Address 0x08	5	I²C, Address 0x58
1	I²C, Address 0x18	6	I²C, Address 0x68
2	I²C, Address 0x28	7	I²C, Address 0x78
3	I²C, Address 0x38		

Pressure Range

	Gage		*Gage*		*Gage*
004BG	0 bar to 4 bar	400KG	0 kPa to 400 kPa	060PG	0 psi to 60 psi
008BG	0 bar to 8 bar	800KG	0 kPa to 800 kPa	100PG	0 psi to 100 psi
010BG	0 bar to 10 bar	001GG	0 MPa to 1 MPa	150PG	0 psi to 150 psi
012BG	0 bar to 12 bar	1.2GG	0 MPa to 1.2 MPa	175PG	0 psi to 175 psi

BASIC BOARD MOUNT PRESSURE SENSORS, ABP2 SERIES

TABLE 9. PRESSURE RANGE SPECIFICATIONS (GAGE)

PRESSURE RANGE (SEE FIGURE 5.)	PRESSURE RANGE		UNIT	OVERPRESSURE[1]	BURST PRESSURE[2]
	$P_{MIN.}$	$P_{MAX.}$			
4 bar to 12 bar					
004BG	0	4	bar	16	65
008BG	0	8	bar	16	65
010BG	0	10	bar	16	65
012BG	0	12	bar	16	65
400 kPa to 1.2 MPa					
400KG	0	400	kPa	1600	6500
800KG	0	800	kPa	1600	6500
001GG	0	1	MPa	1.6	6.5
1.2GG	0	1.2	MPa	1.6	6.5
1 psi to 175 psi					
060PG	0	60	psi	250	1000
100PG	0	100	psi	250	1000
150PG	0	150	psi	250	1000
175PG	0	175	psi	250	1000

[1] **Overpressure:** The maximum pressure which may safely be applied to the product for it to remain in specification once pressure is returned to the operating pressure range. Exposure to higher pressures may cause permanent damage to the product. The customer's pressure connection system (tubing or O-rings) must be specified to be equal to, or greater than, the rated overpressure limit. Due to the possibility of light sensitivity, opaque tubing is recommended.

[2] **Burst Pressure:** The maximum pressure that may be applied to any port of the product without causing escape of pressure media. Product should not be expected to function after exposure to any pressure beyond the burst pressure.

FIGURE 6. DIMENSIONAL DRAWINGS (FOR REFERENCE ONLY: MM/[IN])

Leadless SMT AN:
Plastic single axial barbed port

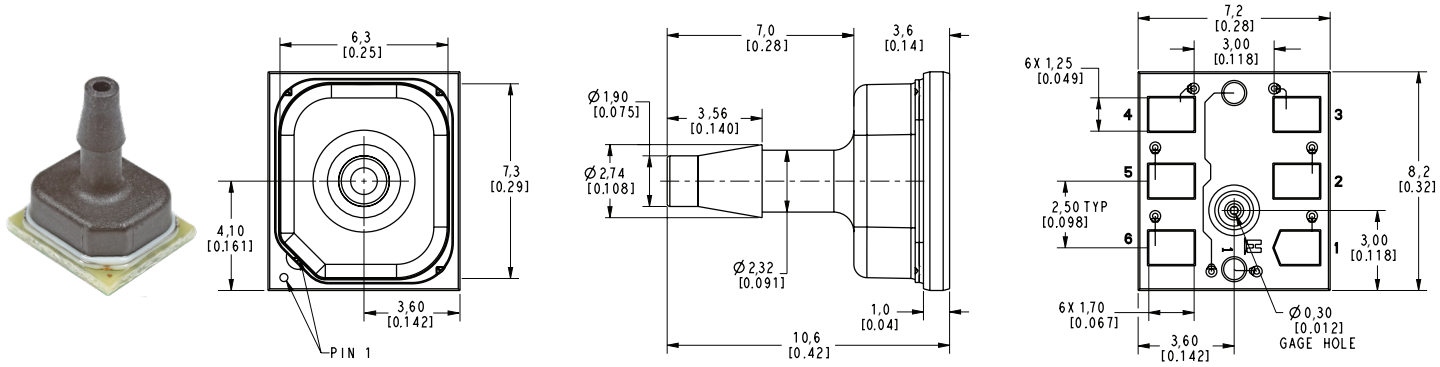

Leadless SMT SN:
Metal single axial barbless port

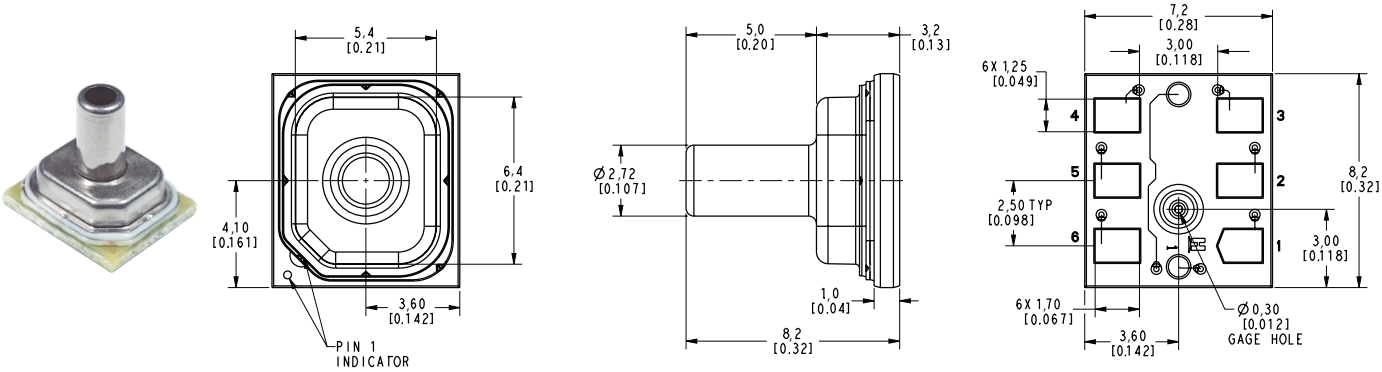

FIGURE 7. RECOMMENDED LEADLESS SMT PCB LAYOUT (FOR REFERENCE ONLY: MM/[IN]

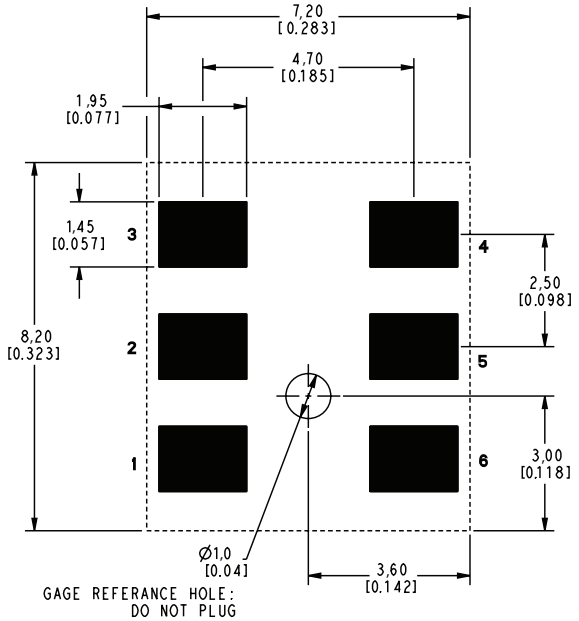

TABLE 10. PINOUT

PAD NUMBER	I²C SENSOR	SPI SENSOR
1	GND	GND
2	V_{DD}	V_{DD}
3	EOC	MISO
4	NC	SS
5	SDA	MOSI
6	SCL	SCLK

1.0 GENERAL INFORMATION

Please see Figures 6 and 7 for product dimensions and pinout details.

2.0 PINOUT AND FUNCTIONALITY (SEE TABLE 11.)

TABLE 11. PINOUT AND FUNCTIONALITY

PAD NUMBER	I²C SENSOR		SPI SENSOR	
	NAME	DESCRIPTION	NAME	DESCRIPTION
1	GND	Ground reference voltage signal	GND	Ground reference voltage signal
2	V_{DD}	Positive supply voltage	V_{DD}	Positive supply voltage
3	EOC	End-of-conversion indicator: This pin is set high when a measurement and calculation have been completed and the data is ready to be clocked out	MISO	Master In/Sensor Out: Data output
4	NC	No connection	SS	Sensor Select: Chip select
5	SDA	Data in/out	MOSI	Master Out/Sensor In: Data in
6	SCL	Clock input	SCLK	Clock input

3.0 START-UP TIMING

On power-up, the ABP2 Series digital sensor is able to receive the first command after 2.5 ms from when the V_{DD} supply is within operating specifications.

4.0 POWER SUPPLY REQUIREMENT

Verify that system power to the sensor meets the V_{DD} rising slope requirement (minimum V_{DD} rising slope is at least 10 V/ms).

5.0 REFERENCE CIRCUIT DESIGN

5.1 I²C and SPI Circuit Diagrams (See Figures 8 and 9.)

FIGURE 8. I²C CIRCUIT DIAGRAM

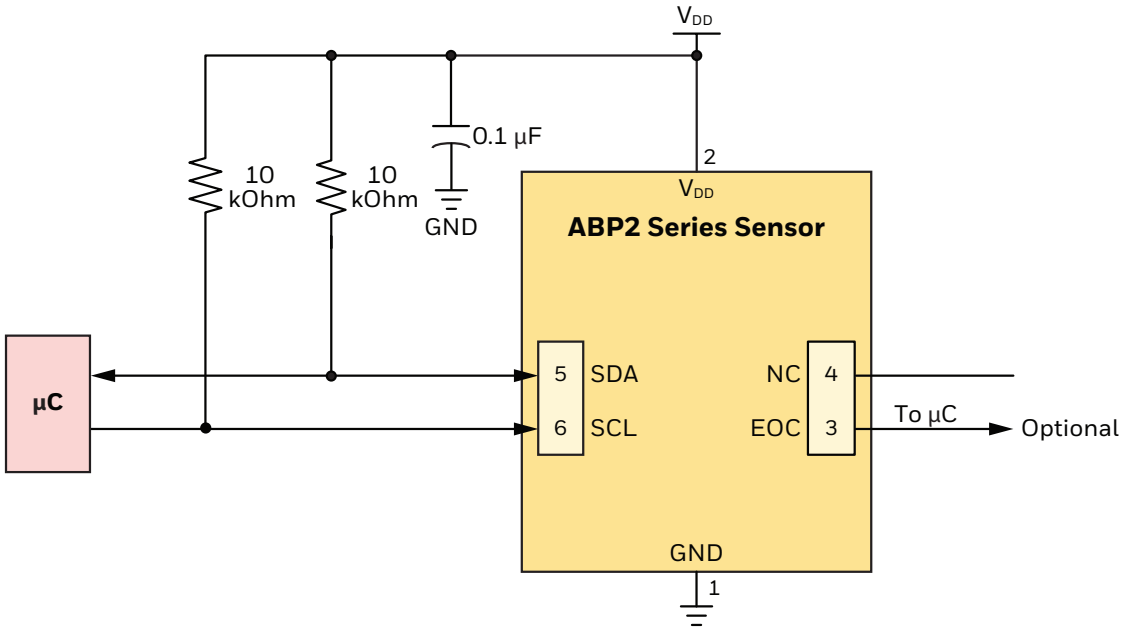

FIGURE 9. SPI CIRCUIT DIAGRAM

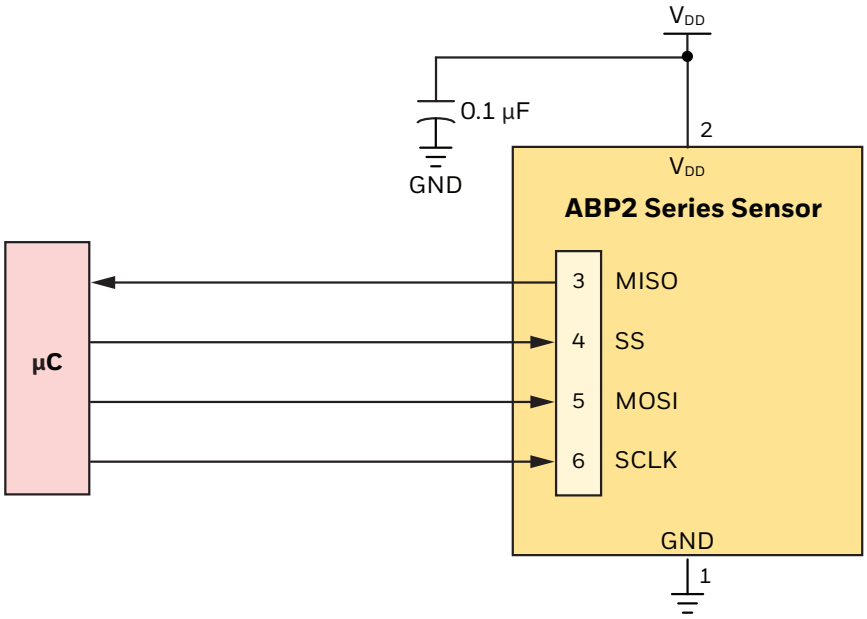

5.2 Bypass Capacitor Use

NOTICE

To ensure output noise suppression, place an external bypass capacitor of 0.1 µF very close to the sensor power supply pin (see Figures 8 and 9) in the end-user design.

6.0 I²C COMMUNICATIONS

6.1 I²C Bus Configuration (See Figure 10.)

The I²C bus is a simple, serial 8-bit oriented computer bus for efficient I²C (Inter-IC) control. It provides good support for communication between different ICs across short circuit-board distances, such as interfacing microcontrollers with various low speed peripheral devices. For detailed specifications of the I²C protocol, see Version 6 (April 2014) of the I²C Bus Specification (source: NXP Semiconductor at https://www.nxp.com/docs/en/user-guide/UM10204.pdf).

Each device connected to the bus is software addressable by a unique address and a simple Master/Sensor relationship that exists at all times. The output stages of devices connected to the bus are designed around an open collector architecture. Because of this, pull-up resistors to $+V_{DD}$ must be provided on the bus. Both SDA and SCL are bidirectional lines, and it is important to system performance to match the capacitive loads on both lines. In addition, in accordance with the I²C specification, the maximum allowable capacitance on either line is 400 pF to ensure reliable edge transitions at 400 kHz clock speeds.

When the bus is free, both lines are pulled up to $+V_{DD}$. Data on the I²C bus can be transferred at a rate up to 100 kbit/s in the standard-mode, or up to 400 kbit/s in the fast-mode.

FIGURE 10. I²C BUS CONFIGURATION

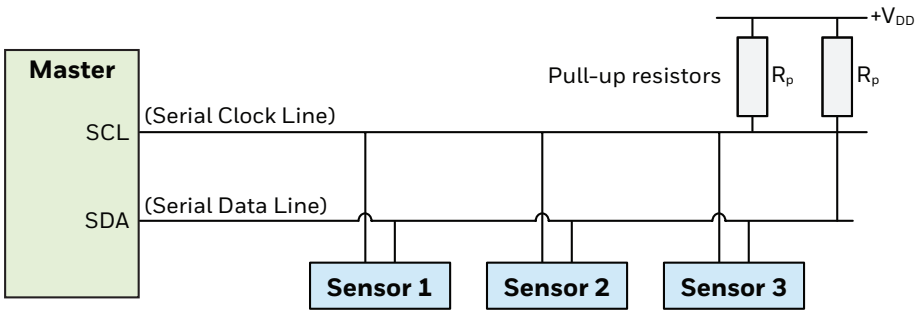

6.2 I²C Data Transfer

The ABP2 Series I²C sensors are designed to respond to requests from a Master device. Following the address and read bit from the Master, the ABP2 Series digital output pressure sensors are designed to output up to 7 bytes of data. The first data byte is the Status Byte (8 bit), the second to fourth bytes are the compensated pressure output (24 bit) and the fifth to seventh bytes are the compensated temperature output (24 bit).

6.3 I²C Sensor Address

Each ABP2 Series I²C sensor is referenced on the bus by a 7-bit Sensor address. The default address for the ABP2 Series is 40 (28 hex). Other available standard addresses are: 08 (08 hex), 24 (18 hex), 56 (38 hex), 72 (48 hex), 88 (58 hex), 104 (68 hex), 120 (78 hex). (Other custom values are available. Please contact Honeywell Customer Service with questions regarding custom Sensor addresses.)

6.4 I²C Pressure and Temperature Reading

To read out the compensated pressure and temperature reading, the Master generates a START condition and sends the Sensor address followed by a read bit (1). After the Sensor generates an acknowledge, it will transmit up to 7 bytes of data. The first data byte is the Status Byte (8-bit) and the second to fourth bytes are the compensated pressure output (24 bit) and the fifth to seventh bytes are the compensated temperature output (24 bit). The Master must acknowledge the receipt of each byte, and can terminate the communication by sending a Not Acknowledge (NACK) bit followed by a Stop bit after receiving the required bytes of data.

6.5 I²C Status Byte (See Table 12.)

TABLE 12. I²C STATUS BYTE EXPLANATION

BIT (MEANING)	STATUS	COMMENT
7	always 0	—
6 (Power indication)	1 = device is powered 0 = device is not powered	—
5 (Busy flag)	1 = device is busy	Indicates that the data for the last command is not yet available. No new commands are processed if the device is busy.
4	always 0	—
3	always 0	—
2 (Memory integrity/error flag)	0 = integrity test passed 1 = integrity test failed	Indicates whether the checksum-based integrity check passed or failed; the memory error status bit is calculated only during the power-up sequence.
1	always 0	—
0 (Math saturation)	1 = internal math saturation has occurred	—

6.6 I²C Communications

6.6.1 I²C Output Measurement Command

To communicate with the ABP2 Series I²C output sensor using an Output Measurement Command of "0xAA", followed by "0x00" "0x00", follow the steps shown in Table 13. This command will cause the device to exit Standby Mode and enter Operating Mode. At the conclusion of the measurement cycle, the device will automatically re-enter Standby Mode.

TABLE 13. I²C OUTPUT MEASUREMENT COMMAND

STEP	ACTION			NOTES
1	S | SensorAddr | 0 | A | Command | A | CmdData <15:8> | A | CmdData <7:0> | A | P 7-bit Write bit			Master to Sensor Sensor to Master S Start condition P Stop condition A Acknowledge N Not acknowledge
2	**Option 1:** Wait until the busy flag in the Status Byte clears. S | SensorAddr | 1 | A | Status | N | P 7-bit Read bit	**Option 2:** Wait for at least 5 ms for the data conversion to occur.	**Option 3:** Wait for the EOC indicator.	
3	To read only the 24-bit pressure output along with the 8-bit Status Byte:t S | SensorAddr | 1 | A | Status | A | PressData <23:16> | A | PressData <15:8> | A | PressData <7:0> | N | P 7-bit Read bit To read the 24-bit pressure output and 24-bit temperature output along with the 8-bit Status Byte: S | SensorAddr | 1 | A | Status | A | PressData <23:16> | A | PressData <15:8> | A | PressData <7:0> | A | TempData <23:16> | A | TempData <15:8> | A | TempData <7:0> | N | P 7-bit Read bit			

6.6.2 I²C Sensor Address of 0x28

To communicate with the ABP2 Series I²C output sensor with an I²C Sensor Address of 0x28 (hex), follow the steps shown in Table 14.

TABLE 14. I²C SENSOR ADDRESS OF 0X28 COMMUNICATIONS

STEP	ACTION			NOTES
1	0x28 | 0 S | SensorAddr | 0 | A | Command | A | CmdData <15:8> | A | CmdData <7:0> | A | P 0x50 (Write bit) | 0xAA | 0x00 | 0x00			Master to Sensor Sensor to Master S Start condition P Stop condition A Acknowledge N Not acknowledge
2	**Option 1:** Wait until the busy flag in the Status Byte clears. 0x28 | 1 S | SensorAddr | 1 | A | Status | N | P 0x51 (Read bit)	**Option 2:** Wait for at least 5 ms for the data conversion to occur.	**Option 3:** Wait for the EOC indicator.	
3	To read the 24-bit pressure output along with the 8-bit Status Byte: 0x28 | 1 S | SensorAddr | 1 | A | Status | A | PressData <23:16> | A | PressData <15:8> | A | PressData <7:0> | N | P 0x51 (Read bit) To read the 24-bit pressure output and the 24-bit temperature output along with the 8-bit Status Byte: 0x28 | 1 S | SensorAddr | 1 | A | Status | A | PressData <23:16> | A | PressData <15:8> | A | PressData <7:0> | A | TempData <23:16> | A | TempData <15:8> | A | TempData <7:0> | N | P 0x51 (Read bit)			

6.7 I²C Timing and Level Parameters (See Table 15.)

TABLE 15. I²C BUS TIMING DIAGRAM AND PARAMETERS

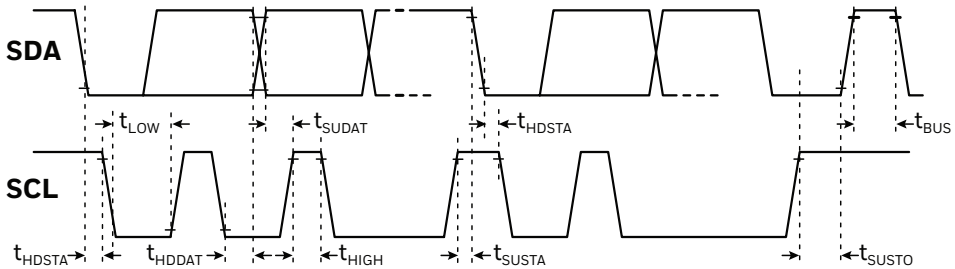

CHARACTERISTIC	ABBREVIATION	MIN.	TYP.	MAX.	UNIT
SCL clock frequency	f_{SCL}	100	—	400	kHz
Start condition hold time relative to SCL edge	t_{HDSTA}	0.1	—	—	µs
Minimum SCL clock low width[1]	t_{LOW}	0.6	—	—	µs
Minimum SCL clock high width[1]	t_{HIGH}	0.6	—	—	µs
Start condition setup time relative to SCL edge	t_{SUSTA}	0.1	—	—	µs
Data hold time on SDA relative to SCL edge	t_{HDDAT}	0	—	—	µs
Data setup time on SDA relative to SCL edge	t_{SUDAT}	0.1	—	—	µs
Stop condition setup time on SCL	t_{SUSTO}	0.1	—	—	µs
Bus free time between stop condition and start condition	t_{BUS}	2	—	—	µs
Output level low	Out_{low}	—	0	0.2	V_{DD}
Output level high	Out_{high}	0.8	1	—	V_{DD}
Pull-up resistance on SDA and SCL	R_p	1	—	50	kOhm

[1] Combined low and high widths must equal or exceed minimum SCL period.

6.8 Reference Code (Arduino/Genuino Uno) for I²C Interface

See also Section 8.0 for details and examples of ABP2 Series Pressure and Temperature output calculations.

```
#include<Arduino.h>
#include<Wire.h>

uint8_t id = 0x28; // i2c address

uint8_t data[7]; // holds output data
uint8_t cmd[3]; = {0xAA, 0x00, 0x00}; // command to be sent
double press_counts = 0; // digital pressure reading [counts]
double temp_counts = 0; // digital temperature reading [counts]
double pressure = 0; // pressure reading [bar, psi, kPa, etc.]
double temperature = 0; // temperature reading in deg C
double outputmax = 15099494; // output at maximum pressure [counts]
double outputmin = 1677722; // output at minimum pressure [counts]
double pmax = 1; // maximum value of pressure range [bar, psi, kPa, etc.]
double pmin = 0; // minimum value of pressure range [bar, psi, kPa, etc.]
double percentage = 0; // holds percentage of full scale data
char printBuffer[200], cBuff[20], percBuff[20], pBuff[20] tBuff[20];

void setup() {
  Serial.begin(9600);
  while (!Serial) {
   delay(10);
  }
  Wire.begin();
  sprintf(printBuffer, "\nStatus Register, 24-bit Sensor data, Digital Pressure Counts, Percentage of full scale
pressure, Pressure Output, Temperature\n");
  Serial.println(printBuffer);
}

void loop() {
  Wire.beginTransmission(id);
  int stat = Wire.write (cmd, 3); // write command to the sensor
  stat |= Wire.endTransmission();
  delay(10);
  Wire.requestFrom(id, 7); // read back Sensor data 7 bytes
  int i = 0;
  for (i = 0; i < 7; i++){
  data [i] = Wire.read();
}
  press_counts = data[3] + data[2] * 256 + data[1] * 65536; // calculate digital pressure counts
  temp_counts = data[6] + data[5] * 256 + data[4] * 65536; // calculate digital temperature counts
  temperature = (temp_counts * 200 / 16777215) - 50; // calculate temperature in deg c
  percentage = (press_counts / 16777215) * 100; // calculate pressure as percentage of full scale
  pressure = ((press_counts - outputmin) * (pmax - pmin)) / (outputmax - outputmin) + pmin; //
calculation of pressure value according to equation 2 of datasheet
  dtostrf(press_counts, 4, 1, cBuff);
  dtostrf(percentage, 4, 3, percBuff);
  dtostrf(pressure, 4, 3, pBuff;
  dtostrf(temperature, 4, 3, tBuff);
  /*
  The below code prints the raw data as well as the processed data
  Data format : Status Register, 24-bit Sensor Data, Digital Counts, percentage of full scale pressure,
pressure output, temperature
  /*
  sprintf(printBuffer, "%x\t%2x %2x %2x\t%s\t%s\t%s\t%s \n", data[0], data[1], data[2], data[3],
cBuff, percBuff, pBuff, tBuff);
  Serial.print(printBuffer);
  delay(10);
  }
```

7.0 SPI COMMUNICATIONS

7.1 SPI Definition

The Serial Peripheral Interface (SPI) is a simple bus system for synchronous serial communication between one Master and one or more Sensors. It operates either in full-duplex or half-duplex mode, allowing communication to occur in either both directions simultaneously, or in one direction only. The Master device initiates an information transfer on the bus and generates clock and control signals. Sensor devices are controlled by the Master through individual Sensors Select (SS) lines and are active only when selected. The ABP2 Series SPI sensors operate in full-duplex mode only, with data transfer from the Sensors to the Master. This data transmission uses four, unidirectional bus lines. The Master controls SCLK, MOSI and SS; the Sensor controls MISO. (See Figure 11.)

FIGURE 11. SPI BUS CONFIGURATION

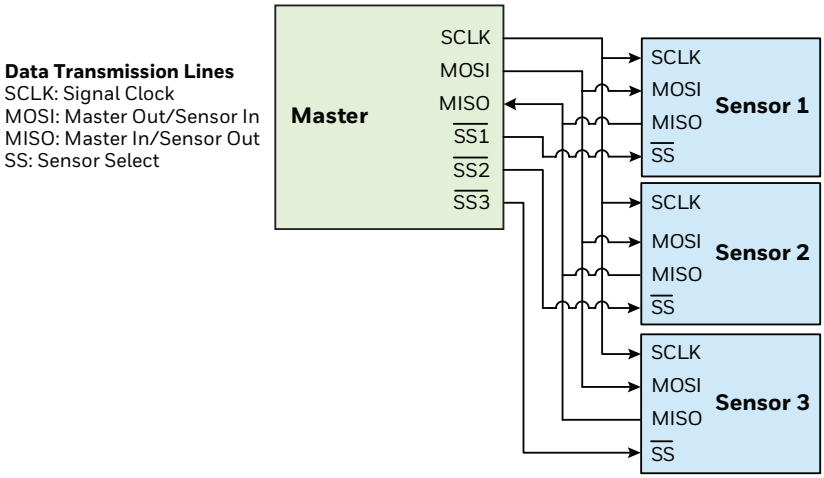

7.2 SPI Data Transfer

Communicate with the ABP2 Series SPI sensors by de-asserting the Sensor Select (SS) line. At this point, the sensor is no longer idle, and will begin sending data once a clock is received. ABP2 Series SPI sensors are configured for SPI operation in mode 0 (clock polarity is 0 and clock phase is 0). (See Figure 12.)

FIGURE 12. EXAMPLE OF 1 BYTE SPI DATA TRANSFER

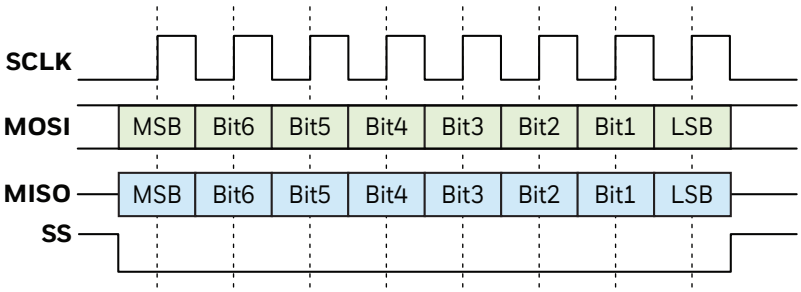

Once the clocking begins, the ABP2 Series SPI sensor is designed to output up to 7 bytes of data. The first data byte is the Status Byte (8-bit), the second to fourth bytes are the compensated pressure output (24-bit) and the fifth to seventh bytes are the compensated temperature output (24-bit).

7.3 SPI Pressure and Temperature Reading

To read out the compensated pressure and temperature reading, the Master generates the necessary clock signal after activating the sensor with the Sensor Select (SS) line. The sensor will transmit up to 7 bytes of data. The first data byte is the Status Byte (8-bit), the second to fourth bytes are the compensated pressure output (24-bit) and the fifth to seventh bytes are the compensated temperature output (24-bit). The Master can terminate the communication by stopping the clock and deactivating the SS line.

7.4 SPI Status Byte

The SPI status byte contains the bits shown in Table 16.

TABLE 16. SPI STATUS BYTE EXPLANATION

BIT (MEANING)	STATUS	COMMENT
7	always 0	—
6 (Power indication)	1 = device is powered 0 = device is not powered	—
5 (Busy flag)	1 = device is busy	Indicates that the data for the last command is not yet available. No new commands are processed if the device is busy.
4	always 0	—
3	always 0	—
2 (Memory integrity/error flag)	0 = integrity test passed 1 = integrity test failed	Indicates whether the checksum-based integrity check passed or failed; the memory error status bit is calculated only during the power-up sequence.
1	always 0	—
0 (Math saturation)	1 = internal math saturation has occurred	—

7.5 SPI Communication

To communicate with the ABP2 Series SPI output sensor using an Output Measurement Command of "0xAA", followed by "0x00" "0x00", follow the steps shown in Table 17. This command will cause the device to exit Standby Mode and enter Operating Mode. At the conclusion of the measurement cycle, the device will automatically re-enter Standby Mode.

TABLE 17. SPI OUTPUT MEASUREMENT COMMAND

STEP	ACTION	NOTES
1	The data on MISO depend on the preceding command. Discard the data on the MISO line. **MOSI**: 0xAA | 0x00 | 0x00 Measurement Command | CmdData <15:8> | CmdData <7:0> **MISO**: Status | Data | Data	Master to Sensor Sensor to Master • NOP Command is "0xF0".
2	**Option 1:** Wait until the busy flag in the Status Byte clears. **MOSI**: 0xF0 Command = NOP **MISO**: Status **Option 2:** Wait for at least 5 ms for the data conversion to occur.	
3	To read only the 24-bit pressure output along with the 8-bit Status Byte: **MOSI**: 0xF0 | 0x00 | 0x00 | 0x00 Command = NOP | 00_{Hex} | 00_{Hex} | 00_{Hex} **MISO**: Status | PressData <24:16> | PressData <15:8> | PressData <7:0> To read the 24-bit pressure output and the 24-bit temperature output along with the 8-bit Status Byte: **MOSI**: 0xF0 | 0x00 | 0x00 | 0x00 | 0x00 | 0x00 | 0x00 Command = NOP | 00_{Hex} | 00_{Hex} | 00_{Hex} | 00_{Hex} | 00_{Hex} | 00_{Hex} **MISO**: Status | PressData <24:16> | PressData <15:8> | PressData <7:0> | TempData <24:16> | TempData <15:8> | TempData <7:0>	

7.6 SPI Timing and Level Parameters (See Table 18.)

TABLE 18. SPI BUS TIMING DIAGRAM AND PARAMETERS

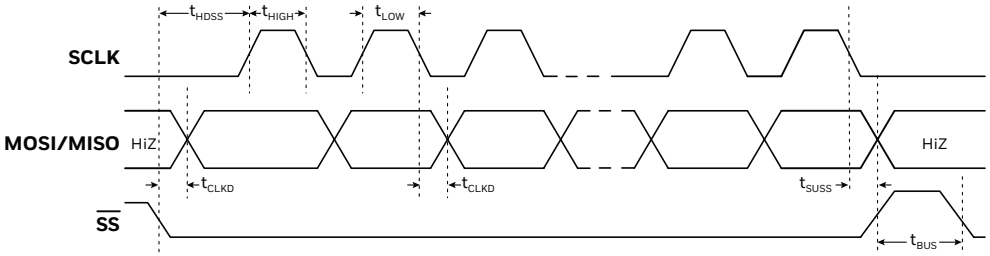

CHARACTERISTIC	ABBREVIATION	MIN.	TYP.	MAX.	UNIT
SCLK clock frequency	f_{SCLK}	50	—	800	kHz
SS drop to first clock edge	t_{HDSS}	2.5	—	—	µs
Minimum SCLK clock low width[1]	t_{LOW}	0.6	—	—	µs
Minimum SCLK clock high width[1]	t_{HIGH}	0.6	—	—	µs
Clock edge to data transition	t_{CLKD}	0	—	—	µs
Rise of SS relative to last clock edge	t_{SUSS}	0.1	—	—	µs
Bus free time between rise and fall of SS	t_{BUS}	2	—	—	µs
Output level low	Out_{low}	—	0	0.2	V_{DD}
Output level high	Out_{high}	0.8	1	—	V_{DD}

[1]Combined low and high widths must equal or exceed minimum SCLK period.

7.7 Reference Code (Arduino/Genuino Uno) for SPI Interface

See also Section 8.0 for details and examples of ABP2 Series Pressure and Temperature output calculations.

```
#include<Arduino.h>
#include<SPI.h>

double press_counts = 0; // digital pressure reading [counts]
double temp_counts = 0; // digital temperature reading [counts]
double pressure = 0; // pressure reading [bar, psi, kPa, etc.]
double temperature = 0; // temperature reading in deg C
double outputmax = 15099494; // output at maximum pressure [counts]
double outputmin = 1677722; // output at minimum pressure [counts]
double pmax = 1; // maximum value of pressure range [bar, psi, kPa, etc.]
double pmin = 0; // minimum value of pressure range [bar, psi, kPa, etc.]
double percentage = 0; // holds percentage of full scale data
char printBuffer[200], cBuff[20], percBuff[20], pBuff[20] tBuff[20];

void setup() {
  Serial.begin(9600);
  while (!Serial) {
   delay(10);
  }
  sprintf(printBuffer, "\nStatus Register, 24-bit Sensor data, Digital Pressure Counts, Percentage of full scale pressure,
Pressure Output, Temperature\n");
  Serial.println(printBuffer);
  SPI.begin();
  pinMode(10, OUTPUT); // pin 10 as SS
  digitalWrite(10, HIGH); // set SS High
}

void loop() {
  delay(1);
  while (1) {
    uint8_t data[7] = {0xFA, 0x00, 0x00, 0x00, 0x00, 0x00, 0x00}; // holds output data
    uint8_t cmd[3] = {0xAA, 0x00, 0x00}; // command to be sent
    SPI.begin Transaction (SPISettings(200000, MSBFIRST. SPI_MODE0)); //SPI at 200kHz
    digitalWrite(10, LOW); // set SS Low
    SPI.transfer(cmd, 3); // send Read Command
    digitalWrite(10, HIGH); // set SS High
    delay(10); // wait for conversion
    digitalWrite(10, LOW);
    SPI.transfer(data, 7);
    digitalWrite(10, HIGH);
    SPI.endTransaction();
}
    press_counts = data[3] + data[2] * 256 + data[1] * 65536; // calculate digital pressure counts
    temp_counts = data[6] + data[5] * 256 + data[4] * 65536; // calculate digital temperature counts
    temperature = (temp_counts * 200 / 16777215) - 50; // calculate temperature in deg c
    percentage = (press_counts / 16777215) * 100; // calculate pressure as percentage of full scale
    pressure = ((press_counts - outputmin) * (pmax - pmin)) / (outputmax - outputmin) + pmin; //
calculation of pressure value according to equation 2 of datasheet
    dtostrf(press_counts, 4, 1, cBuff);
    dtostrf(percentage, 4, 3, percBuff);
    dtostrf(pressure, 4, 3, pBuff);
    dtostrf(temperature, 4, 3, tBuff);
  /*
  The below code prints the raw data as well as the processed data
  Data format : Status Register, 24-bit Sensor Data, Digital Counts, percentage of full scale pressure, pressure output,
temperature
  */
  sprintf(printBuffer, "%x\t%2x %2x %2x\t%s\t%s\t%s\t%s \n", data[0], data[1], data[2], data[3],
cBuff, percBuff, pBuff, tBuff);
  Serial.print(printBuffer);
  delay(10);
  }
}
```

8.0 ABP2 SERIES CALCULATIONS

8.1 Pressure Output

The ABP2 Series sensor pressure output may be be expressed by the transfer function of the device as shown in Equation 1:

Equation 1: Pressure Sensor Transfer Function

$$\text{Output} = \frac{\text{Output}_{max.} - \text{Output}_{min.}}{P_{max.} - P_{min.}} * (\text{Pressure} - P_{min.}) + \text{Output}_{min.}$$

Rearranging this equation to solve for Pressure provides Equation 2:

Equation 2: Pressure Output Function

$$\text{Pressure} = \frac{(\text{Output} - \text{Output}_{min.}) * (P_{max.} - P_{min.})}{\text{Output}_{max.} - \text{Output}_{min.}} + P_{min.}$$

Where:

$\text{Output}_{max.}$ = output at maximum pressure [counts]
$\text{Output}_{min.}$ = output at minimum pressure [counts]
$P_{max.}$ = maximum value of pressure range [bar, psi, kPa, etc.]
$P_{min.}$ = minimum value of pressure range [bar, psi, kPa, etc.]
Pressure = pressure reading [bar, psi, kPa, etc.]
Output = digital pressure reading [counts]

Example: Calculate the pressure for a -1 psi to 1 psi gage sensor with a 10% to 90% calibration, and a pressure output of 14260634 (decimal) counts:

$\text{Output}_{max.}$ = 15099494 counts (90% of 2^{24} counts or 0xE66666)
$\text{Output}_{min.}$ = 1677722 counts (10% of 2^{24} counts or 0x19999A)
$P_{max.}$ = 1 psi
$P_{min.}$ = -1 psi
Pressure = calculated pressure in psi
Output = 14260634 counts

$$\text{Pressure} = \left(\frac{(14260634 - 1677722) * (1 - (-1))}{15099494 - 1677722}\right) + (-1)$$

$$\text{Pressure} = \left(\frac{25165824}{13421772}\right) + (-1)$$

$$\text{Pressure} = 0.875 \text{ psi}$$

8.2 Temperature Output

The ABP2 Series sensor temperature output may be expressed by the transfer function of the device as shown in Equation 3:

Equation 3: Temperature Output Transfer Function

$$\text{Temperature} = \frac{T_{out} * (T_{max.} - T_{min.})}{(2^{(24)} - 1)} + T_{min.}$$

Where:

Temperature = calculated temperature output in °C

T_{out} = digital temperature output in counts (decimal)

$T_{max.}$ = 150°C

$T_{min.}$ = -50°C

Example: Calculate the temperature for a temperature output of 6291456 (decimal) counts.

$$\text{Temperature} = \frac{T_{out} * (150 - (-50))}{(2^{(24)} - 1)} + T_{min.}$$

$$\text{Temperature} = \frac{6291456 * 200}{16777215} - 50$$

$$\text{Temperature} = 25°C$$

WARRANTY/REMEDY

Honeywell warrants goods of its manufacture as being free of defective materials and faulty workmanship during the applicable warranty period. Honeywell's standard product warranty applies unless agreed to otherwise by Honeywell in writing; please refer to your order acknowledgment or consult your local sales office for specific warranty details. If warranted goods are returned to Honeywell during the period of coverage, Honeywell will repair or replace, at its option, without charge those items that Honeywell, in its sole discretion, finds defective. **The foregoing is buyer's sole remedy and is in lieu of all other warranties, expressed or implied, including those of merchantability and fitness for a particular purpose. In no event shall Honeywell be liable for consequential, special, or indirect damages.**

⚠ WARNING
PERSONAL INJURY

DO NOT USE these products as safety or emergency stop devices or in any other application where failure of the product could result in personal injury.

Failure to comply with these instructions could result in death or serious injury.

⚠ WARNING
MISUSE OF DOCUMENTATION

- The information presented in this product sheet is for reference only. Do not use this document as a product installation guide.
- Complete installation, operation, and maintenance information is provided in the instructions supplied with each product.

Failure to comply with these instructions could result in death or serious injury.

While Honeywell may provide application assistance personally, through our literature and the Honeywell web site, it is buyer's sole responsibility to determine the suitability of the product in the application.

Specifications may change without notice. The information we supply is believed to be accurate and reliable as of this writing. However, Honeywell assumes no responsibility for its use.

FOR MORE INFORMATION

Honeywell Sensing and Internet of Things services its customers through a worldwide network of sales offices and distributors. For application assistance, current specifications, pricing or the nearest Authorized Distributor, visit sensing.honeywell.com or call:

USA/Canada	+1 302 613 4491
Latin America	+1 305 805 8188
Europe	+44 1344 238258
Japan	+81 (0) 3-6730-7152
Singapore	+65 6355 2828
Greater China	+86 4006396841

Honeywell
Sensing and Internet of Things
830 East Arapaho Road
Richardson, TX 75081
sensing.honeywell.com

32350268-A-EN | A | 05/20
© 2020 Honeywell International Inc. All rights reserved.

Honeywell