THIS DRAWING IS UNPUBLISHED. RELEASED FOR PUBLICATION -.-.-
© COPYRIGHT - BY TYCO ELECTRONICS CORPORATION. ALL RIGHTS RESERVED.

LOC	DIST
ES	00

REVISIONS

P	LTR	DESCRIPTION	DATE	DRN	APVD
	A	REVISED FB00-0215-04	16DEC04	G.Z.	I.E.

1. MATERIAL:
   SHELL & CONTACTS- COPPER ALLOY.
   HOUSING- UL 94V-0 RATED, THERMOPLASTIC, SEE TABLE.
2. PLATING:
   CONTACTS- 0.076um MINIMUM GOLD OVER 0.76um MINIMUM PALLADIUM-NICKEL ON MATING AREA. OR CONTACT ALTRENATE PLATING 0.76um MINIMUM GOLD ON MATING AREA. 3.80um MINIMUM MATTE TIN ON SOLDER TAILS. BOTH OVER 1.27um MINIMUM NICKEL.
   SHELL: 2-5um MINIMUM BRIGHT TIN
3. DATUM AND BASIC DIMENSIONS ESTABLISHED BY CUSTOMER.
4. RECOMMENDED PC BOARD THICKNESS OF 1.57.
5. PLATING:
   CONTACTS- 0.127um MINIMUM GOLD ON MATING AREA, 3.80um MINIMUM MATTE TIN ON SOLDER TAILS. ALL OVER .76um MINIMUM NICKEL ON ENTIRE CONTACT.
   SHELL: 2-5um MINIMUM BRIGHT TIN
6. PACKAGED IN TRAYS

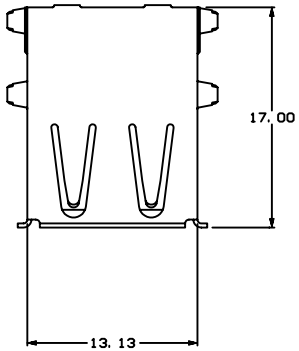

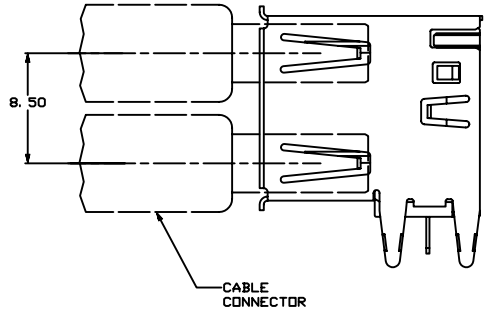

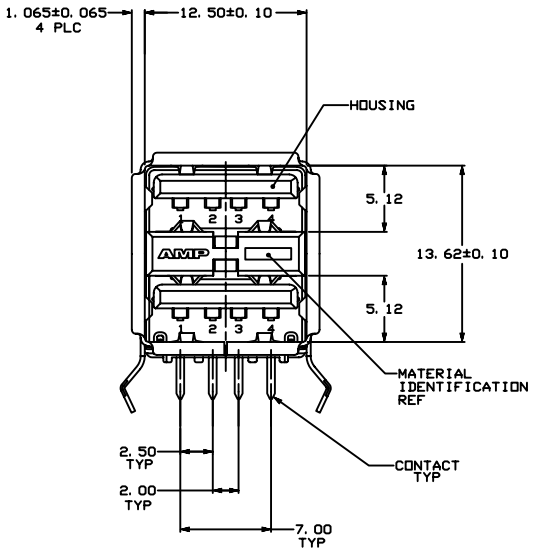

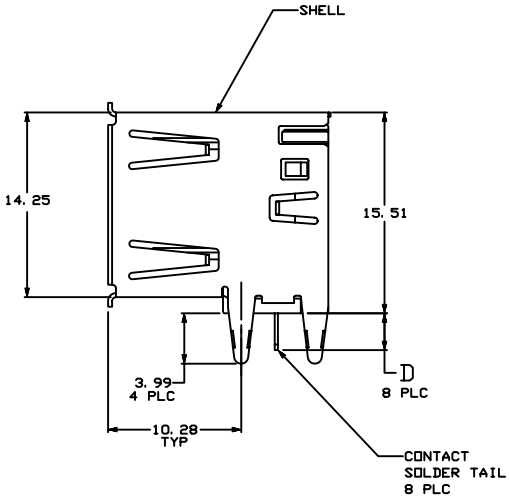

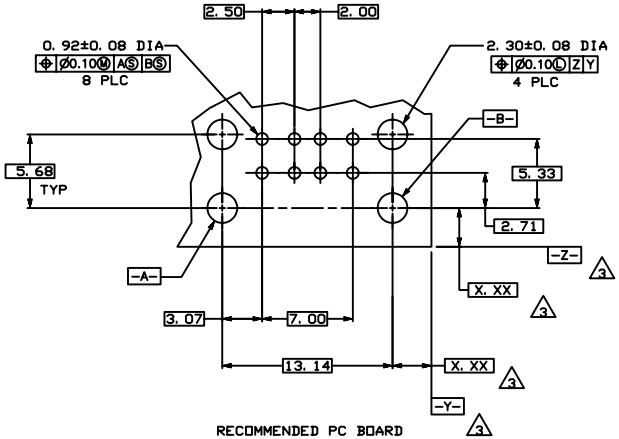

RECOMMENDED PC BOARD MOUNTING DIMENSIONS

PACKAGING	PLATING	HIGH TEMPERATURE COMPATIBLE	D	HOUSING COLOR	PART NUMBER
6	5	NO	2.84±0.25	BLACK	5787617-7
6	6 2	YES	2.84±0.25	NATURAL	5787617-6
6	2	YES	2.29±0.25	BLACK	5787617-5
6	6 2	YES	2.84±0.25	BLACK	5787617-4
6	2	NO	2.84±0.25	NATURAL	5787617-3
6	6 2	NO	2.29±0.25	BLACK	5787617-2
6	2	NO	2.84±0.25	BLACK	5787617-1

THIS DRAWING IS A CONTROLLED DOCUMENT.

DIMENSIONS: mm

TOLERANCES UNLESS OTHERWISE SPECIFIED:
0 PLC ± --
1 PLC ± --
2 PLC ± 0.13
3 PLC ± --
4 PLC ± --
ANGLES ± --

MATERIAL 1

FINISH SEE CHART

DRN	J.JIANG	13APR2004
CHK	S.YAO	13APR04
APVD	J.OU	13APR04
PRODUCT SPEC	—	
APPLICATION SPEC	—	
WEIGHT	—	

CUSTOMER DRAWING

Tyco Electronics Corporation
Shanghai, P.R.China, 200233

RECEPTACLE ASSEMBLY, RIGHT ANGLE, STACKED, THRU-HOLE, USB LEAD FREE VERSION

SIZE	CAGE CODE	DRAWING NO	RESTRICTED TO
A1	00779	C-5787617	—

SCALE 5:1 SHEET 1 OF 1 REV A