Product Change Notice

June 2020

Tadiran Batteries has decided to change the insulation disc of TL(H)-2450.
This will affect the whole model range of the product and will be put into production from the second half-year 2020 onwards.

Models: TL-2450/P with disc; Catalogue No. 11 1 13763 02 and
TLH-2450/P with disc; Catalogue No. 11 1 15763 02.

Data sheets are available

The new insulation disc is up to 0.8mm thicker. This also effects the available length of the pins by 0.8mm.

old Version

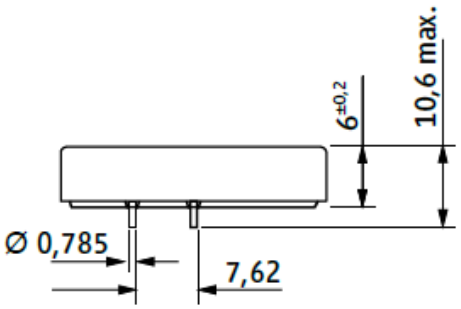

new Version

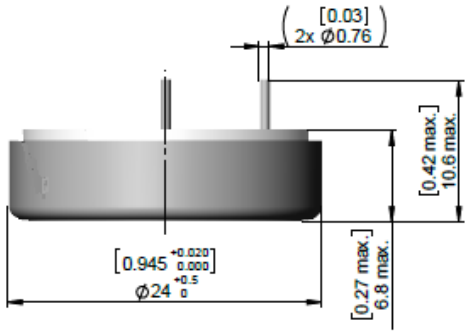

The appearance could either be with or without visible extraction points

Tadiran Batteries GmbH

Marc Henn, MBA Eng.
Application Engineering Manager and Sales