USB2.0 A-B FEEDTHROUGH CONNECTOR

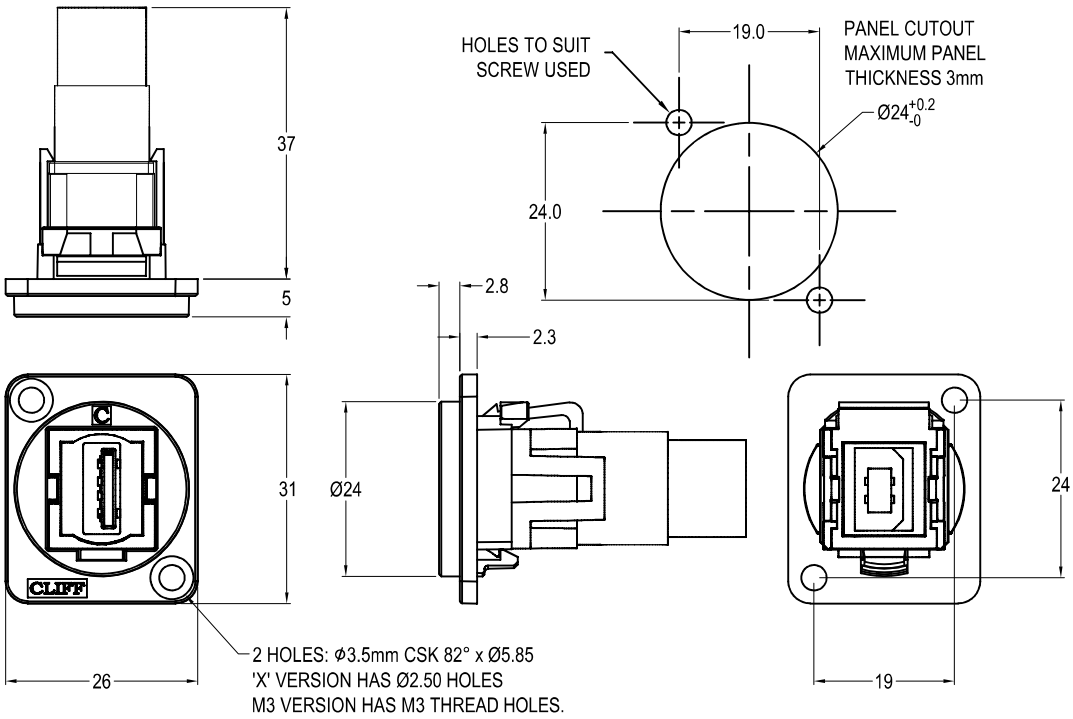

Feedthrough Features

- Fits standard XLR Ø24mm cutout.
- No soldering or punch termination. Use standard cable for each connector style.
- Front or rear mounted.
- Low rear profile

General:

Please note: Functionality is affected by cable quality, length and cable wiring configuration.

VARIANTS

Part No.	
CP30209N	USB2.0 A-B Black plastic frame, CSK holes
CP30209NW	USB2.0 A-B White plastic frame, CSK holes
CP30209NM	USB2.0 A-B Nickel plated metal frame, CSK holes
CP30209NM3	USB2.0 A-B Nickel plated metal frame, M3 holes
CP30209NMB	USB2.0 A-B Black metal frame, CSK holes
CP30209NM3B	USB2.0 A-B Black metal frame, M3 holes
CP30209NX	USB2.0 A-B Black plastic frame, PLAIN holes
CP30209NWX	USB2.0 A-B White plastic frame, PLAIN holes

Material:

1. Insert: ABS
2. Plastic Frame: Polyamide UL94 V-2
3. Metal Frame: Diecast, Black or Nickel plated
4. Inner Overmouldings: PE + PVC
5. Shell: Nickel plated steel
6. Contacts: Gold Plated

Notes:

1. Voltage rating: 30V AC
2. Current rating: 1.5 A max
3. Contact resistance: 50mΩ max
4. Insulation resistance: 20MΩ min
5. Dielectric withstanding voltage: 500V AC
6. Operating Temperature: -20°C to 50°C

© CLIFF 05/2020 ISS.1

For further information, contact sales@cliffuk.co.uk

Cliff Electronic Components Limited,
76 Holmethorpe Avenue, Holmethorpe Ind. Estate,
Redhill, Surrey RH1 2PF U.K.
Tel: +44 (0)1737 771375 Fax: +44 (0)1737 766012

Visit us online at:
www.cliffuk.co.uk