PIC32CM1216MC00048

PIC32CM MC00 Curiosity Pro User Guide

Preface

The Microchip™ PIC32CM MC00 Curiosity Pro evaluation kit is a hardware platform to evaluate the PIC32CM1216MC00048 microcontroller (MCU), which is supported by the MPLAB® X Integrated Development Environment (IDE). The evaluation kit provides an easy access to the features of the PIC32CM1216MC00048 MCU and explains how to integrate the device in a custom design.

The PIC32CM MC00 Curiosity Pro MCU series evaluation kits include an on-board Embedded Debugger, hence external tools are not required to program or debug the PIC32CM1216MC00048 MCU. The PIC32CM MC00 Curiosity Pro extension series evaluation kits offer additional peripherals to extend the features of the board and ease the development of custom designs.

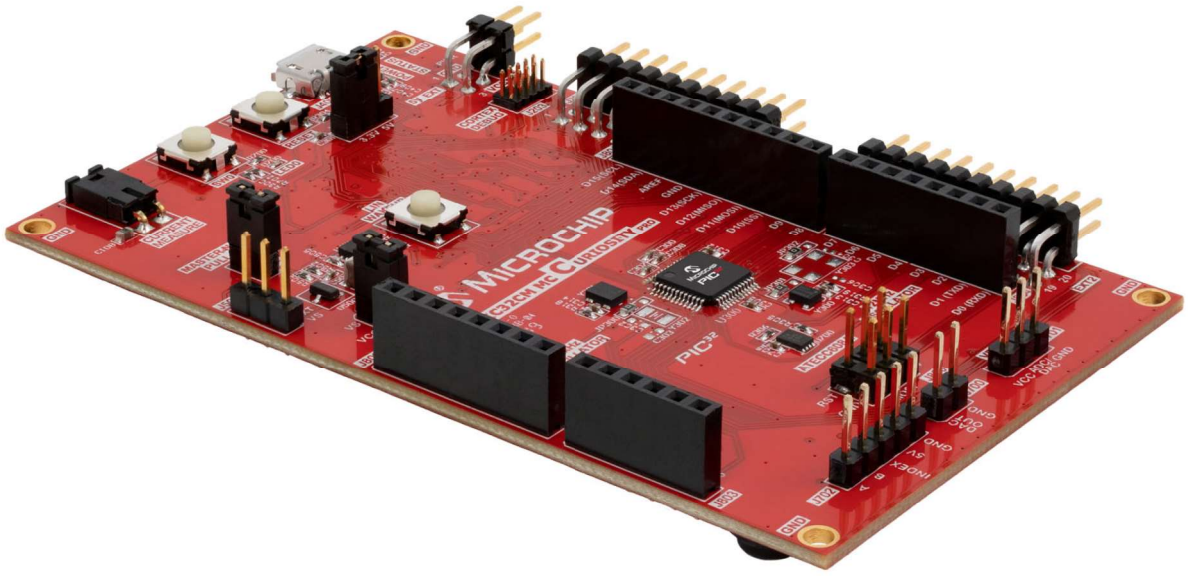

Table of Contents

Preface 1

1. Introduction 3
   - 1.1. PIC32CM MC00 Curiosity Pro Evaluation Kit Features 3
   - 1.2. Kit Overview 3

2. Getting Started 5
   - 2.1. Curiosity Pro Quick Start 5

3. Curiosity Pro 6
   - 3.1. Embedded Debugger 6
   - 3.2. Hardware Identification System 6
   - 3.3. Power Sources 7
   - 3.4. Curiosity Pro Headers and Connectors 7

4. Hardware Users Guide 9
   - 4.1. Power Distribution 9
   - 4.2. Connectors 9
   - 4.3. Peripherals 15
   - 4.4. Kit Modifications 17
   - 4.5. Embedded Debugger Implementation 22

5. Appendix 24
   - 5.1. Getting Started with IAR 24
   - 5.2. Identifying Product ID and Revision 28
   - 5.3. Relevant Links 28
   - 5.4. Schematics 29
   - 5.5. Bill of Materials 38

6. Revision History 41

The Microchip Website 42

Product Change Notification Service 42

Customer Support 42

Microchip Devices Code Protection Feature 42

Legal Notice 42

Trademarks 43

Quality Management System 43

Worldwide Sales and Service 44

1. Introduction

1.1 PIC32CM MC00 Curiosity Pro Evaluation Kit Features

The following are key features of the PIC32CM MC00 Curiosity Pro evaluation kit:

- PIC32CM1216MC00048 microcontroller
- Embedded Debugger
  - USB interface
  - Auto-ID for board identification in MPLAB X IDE
  - One yellow status LED
  - One green board power LED
  - Symbolic debug of complex data types including scope information
  - Programming and debugging of on board PIC32CM MC00 through Serial Wire Debug (SWD)
  - Data Gateway Interface: SPI, I^2C, and four GPIOs
  - Virtual COM port (CDC)
  - Control of on-board power switch to protect connected extensions against high voltage
- Digital I/O
  - Two mechanical buttons (user and reset button)
  - One yellow user LED
  - Two Curiosity Pro extension headers
- Two selectable target voltages
  - 3.3V
  - 5.0V
- Level converters between target section and EDBG section
- 32.768 kHz oscillator mounted
- 12 MHz oscillator mounted
- LIN transceiver
  - Wake-up button
  - Master node pull-up enable
  - Alternate LIN power jumper
- DAC output connector
- Analog voltage reference connector with filtered power supply
  - SDADC VREF
  - ADC/DAC VREF
- Supported with application examples in MPLAB Harmony v3 Framework

1.2 Kit Overview

The PIC32CM MC00 Curiosity Pro evaluation kit is a hardware platform to evaluate the PIC32CM1216MC00048 MCUs. The evaluation kit offers a set of features that enables the user to get started with the PIC32CM MC00 peripherals immediately and to understand how to integrate the device in their designs.

Figure 1-1. PIC32CM MC00 Curiosity Pro Evaluation Kit Overview

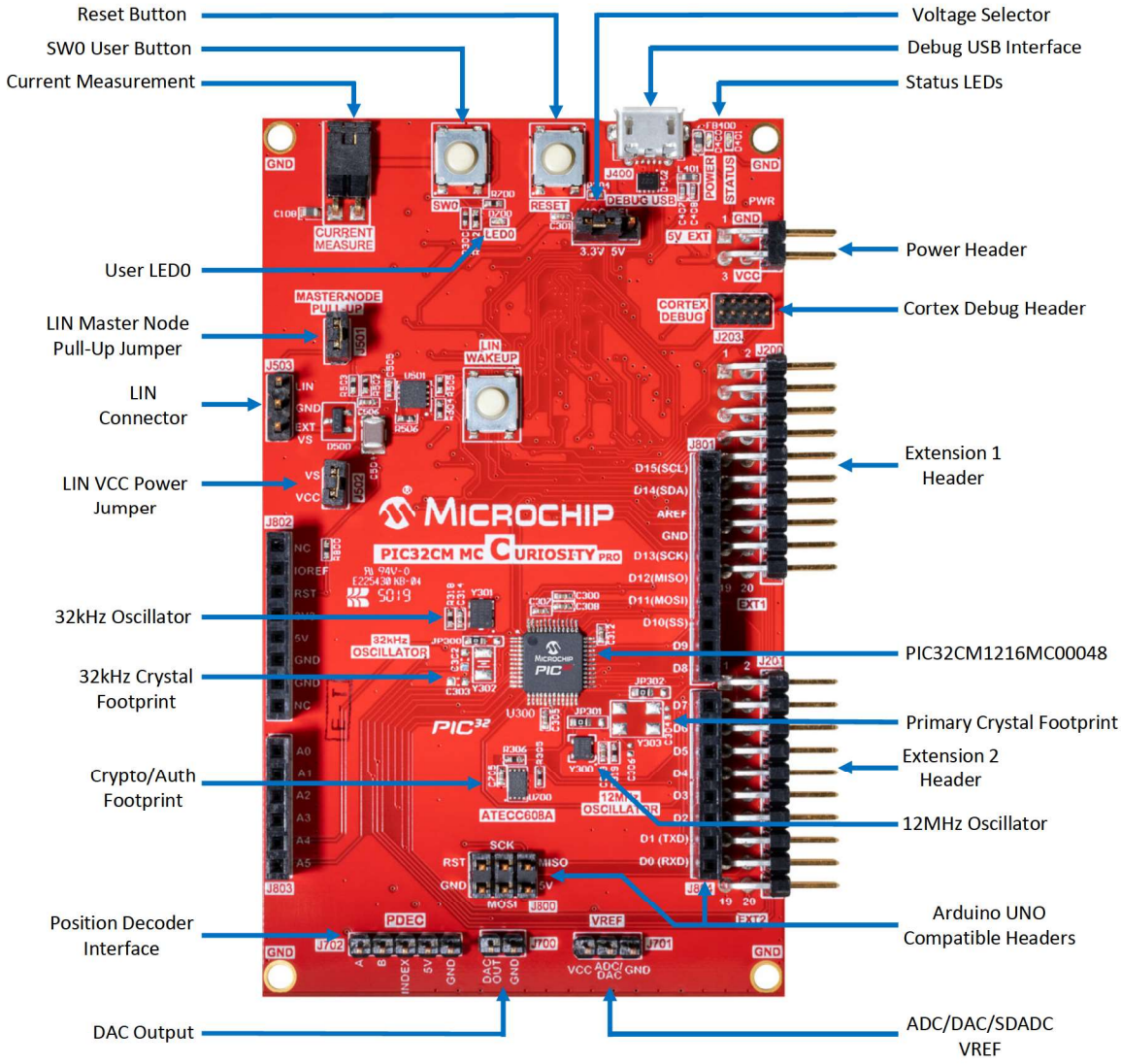

2. Getting Started

2.1 Curiosity Pro Quick Start

Follow these steps to exploring the PIC32CM MC00 Curiosity Pro platform:

1. Download MPLAB X IDE.
2. Launch MPLAB X IDE.
3. Connect the DEBUG USB port on the evaluation kit to the PC using a USB cable (Standard-A to Micro-B, or Micro-AB).

When the PIC32CM MC00 Curiosity Pro evaluation kit is connected to the computer for the first time, operating system will install the software driver. The driver file supports both 32-bit and 64-bit versions of Microsoft® Windows® XP, Windows Vista®, Windows 7, Windows 8, Windows 10, and Windows Server 2012.

When the Curiosity Pro MCU board is powered, the green power LED will glow and MPLAB X IDE will auto detect the specific Curiosity Pro MCU board and extension boards that are connected. MPLAB X IDE will present relevant information, such as data sheets and kit documentation. The kit landing page in MPLAB X IDE also has an option to launch the MPLAB Harmony v3 Framework example applications for the kit. The PIC32CM MC00 device is programmed and debugged by the on-board Embedded Debugger, hence external programmer or debugger tool is not required.

3. Curiosity Pro

The Curiosity Pro is an evaluation platform that provides the full Microchip microcontroller experience. The platform consists of a series of MCU boards and extension boards, which are integrated with MPLAB X IDE, have MPLAB Harmony v3 Framework drivers and demo code, support data streaming, and so on. The Curiosity Pro MCU boards support a wide range of Curiosity Pro extension boards, which are connected through a set of standardized headers and connectors. Each extension board has an identification (ID) chip to uniquely identify which boards are connected to a Curiosity Pro MCU board. This information is used to present relevant user guides, application notes, data sheets, and example code through MPLAB X IDE.

3.1 Embedded Debugger

The PIC32CM MC00 Curiosity Pro contains the Embedded Debugger (EDBG) for on-board debugging. The EDBG is a composite USB device of three interfaces; a debugger, Virtual COM Port, and Data Gateway Interface (DGI).

Together with MPLAB X IDE, the EDBG debugger interface can program and debug the PIC32CM MC00. On the PIC32CM MC00 Curiosity Pro, the SWD interface is connected between the EDBG and the PIC32CM1216MC00048.

The Virtual COM Port is connected to a UART on the PIC32CM1216MC00048 and provides an easy way to communicate with the target application through terminal software. It offers variable baud rate, parity, and stop bit settings. The settings on the PIC32CM1216MC00048 must match the settings given in the terminal software.

Info: The virtual COM port in the EDBG requires the terminal software to set the data terminal ready (DTR) signal to enable the UART pins connected to the PIC32CM1216MC00048. If the DTR signal is not enabled the UART pins on the EDBG is kept in high-z (tristate) rendering the COM port unusable. The DTR signal is set automatically by some terminal software, but it may have to be manually enabled in your terminal.

The DGI consists of several physical interfaces for communication with the host computer. Communication over the interfaces is bidirectional. It can be used to send events and values from the PIC32CM1216MC00048 or as a generic printf-style data channel. Traffic over the interfaces can be timestamped on the EDBG for accurate tracing of events. The timestamping imposes an overhead that reduces maximal throughput. The Data Visualizer is used to send and receive data through DGI.

The EDBG controls two LEDs on the PIC32CM MC00 Curiosity Pro: a power LED and a status LED. The table below provides how the LEDs are controlled in different operation modes.

Table 3-1. EDBG LED Control

Operation mode	Power LED	Status LED
Normal operation	Power LED is lit when power is applied to the board.	Activity indicator, LED flashes when any communication happens to the EDBG.
Bootloader mode (idle)	The power LED and the status LED blinks simultaneously.	
Bootloader mode (firmware upgrade)	The power LED and the status LED blinks in an alternating pattern.	

For additional documentation on the EDBG, refer to the EDBG User Guide.

3.2 Hardware Identification System

All Curiosity Pro compatible extension boards have a ATSHA204 CryptoAuthentication™ chip mounted. This chip contains information that identifies the extension with its name and some extra data. When a Curiosity Pro extension is connected to an Curiosity Pro MCU board the information is read and sent to MPLAB X IDE. The evaluation kits extension, installed with MPLAB X IDE, will give relevant information, code examples, and links to relevant documents. The table below shows the data fields stored in the ID chip with example content.

Table 3-2. Curiosity Pro ID Chip Content

Data field	Data type	Example content
Manufacturer	ASCII string	Microchip'\0'
Product Name	ASCII string	Segment LCD1 Curiosity Pro'\0'
Product Revision	ASCII string	02'\0'
Product Serial Number	ASCII string	1774020200000010'\0'
Minimum Voltage [mV]	uint16_t	3000
Maximum Voltage [mV]	uint16_t	3600
Maximum Current [mA]	uint16_t	30

3.3 Power Sources

The PIC32CM MC00 Curiosity Pro kit can be powered by several power sources as listed in the table below.

Table 3-3. Power Sources for PIC32CM MC00 Curiosity Pro

Power input	Voltage requirements	Current requirements	Connector marking
External power	5V ±2% (±100 mV) for USB host operation. 4.3V to 5.5V if USB host operation is not required.	Recommended minimum is 1A to be able to provide enough current for connected USB devices and the board itself. Recommended maximum is 2A due to the input protection maximum current specification.	PWR
Embedded debugger USB	4.4V to 5.25V (according to USB spec.)	500 mA (according to USB spec.)	DEBUG USB

The evaluation kit will automatically detect which power sources are available, and choose which one to use according to the following priority:

1. External power.
2. Embedded Debugger USB.

Info: External power is required when 500 mA from a USB connector is not enough to power the board with possible extension boards.

3.4 Curiosity Pro Headers and Connectors

3.4.1 Curiosity Pro Standard Extension Header

All Curiosity Pro evaluation kits have many dual-row, 20-pin, 100 mil extension headers. Curiosity Pro MCU boards have male headers, while Curiosity Pro extensions have their female counterparts.

Note: All pins are not always connected. All connected pins follow the defined pin-out description provided in the following table.

The extension headers can be used to connect a variety of Curiosity Pro extensions to Curiosity Pro MCU boards or to access the pins of the target MCU on Curiosity Pro MCU boards directly.

Table 3-4. Curiosity Pro Standard Extension Header

Pin Number	Name	Description
1	ID	Communication line to the ID chip on an extension board
2	GND	Ground
3	ADC(+)	Analo-to-Digital converter, alternatively positive part of differential ADC
4	ADC(-)	Analog-to-Digital converter, alternatively negative part of differential ADC
5	GPIO1	General purpose I/O
6	GPIO2	General purpose I/O
7	PWM(+)	Pulse-Width Modulation (PWM), alternatively positive part of differential PWM
8	PWM(-)	Pulse-Width Modulation, alternatively negative part of differential PWM
9	IRQ/GPIO	Interrupt request line and general purpose I/O
10	SPI_SS_B/GPIO	Slave select for SPI and general purpose I/O
11	I^2C_SDA	Data line for I^2C interface. Always implemented, bus type.
12	I^2C_SCL	Clock line for I^2C interface. Always implemented, bus type.
13	UART_RX	Receiver line of target device UART
14	UART_TX	Transmitter line of target device UART
15	SPI_SS_A	Slave select for SPI. must preferably be unique.
16	SPI_MOSI	Master out slave in line of serial peripheral interface. Always implemented, bus type.
17	SPI_MISO	Master in slave out line of serial peripheral interface (SPI). Always implemented, bus type.
18	SPI_SCK	Clock for serial peripheral interface. Always implemented, bus type.
19	GND	Ground
20	VCC	Power for extension board

3.4.2 Curiosity Pro Power Header

The power header can be used to connect external power to the PIC32CM MC00 Curiosity Pro kit. The kit will automatically detect and switch to any external power if supplied. The power header can also be used as supply for external peripherals or extension boards. Care must be taken not to exceed the total current limitation of the on-board regulator when using the 3.3V or 5.0V pin.

Table 3-5. Curiosity Pro Power Header

Pin number	Pin name	Description
1	VEXT_P5V0	External 5V input
2	GND	Ground
3	VCC_P5V0	Unregulated 5V (output, derived from one of the input sources)
4	VCC_P3V3_P5V0	Regulated 3.3V or 5.0V (output, used as main power supply for the kit)

4. Hardware Users Guide

4.1 Power Distribution

The PIC32CM MC00 Curiosity Pro has two power sources. The following figure shows a block diagram of the power supply circuitry. The evaluation kit can be powered from the EDBG USB and an external 5.0V source. The kit will automatically select which source to draw power from.

Figure 4-1. Power Supply Block Diagram

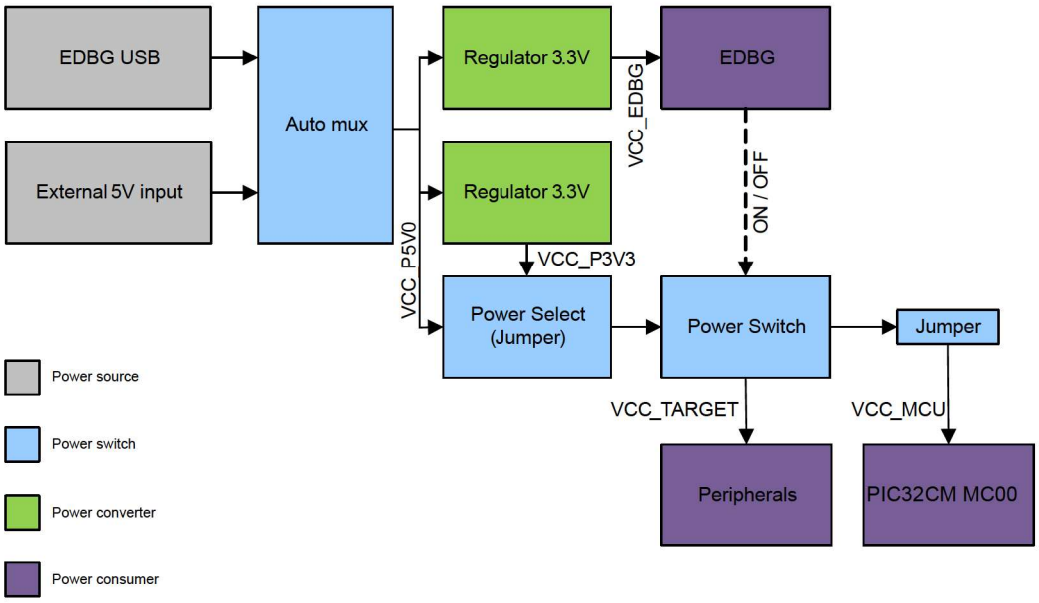

The EDBG controls an on-board power switch to the PIC32CM1216MC00048, the on-board peripherals, and extension connectors. When the kit is powered up, the EDBG reads the ID chip information from all connected Curiosity Pro extension boards and checks whether they are compatible with the voltage selected by the power selection jumper. If the selected voltage is within the connected extensions ranges the switch will open. If not, the EDBG power LED will blink rapidly and the switch will stay closed resulting in power is not provided to the PIC32CM1216MC00048, on-board peripherals, and connectors.

⚠ CAUTION As the PIC32CM MC00 Curiosity Pro can be powered by 5.0V care must be taken not to connect any Curiosity Pro extensions that does not support this voltage, doing so may result in permanent damage. Check the respective extension kit's user guide to see which voltages are acceptable.

Info: The EDBG reads only the ID information and controls the power switch when the kit is powered up. This mechanism does not check hot-plugging of extension boards.

4.2 Connectors

The following sections describes the implementation of the relevant connectors and headers on the PIC32CM MC00 Curiosity Pro and their connection to the PIC32CM1216MC00048. The tables of connections in the sections also describes which signals are shared between the headers and on-board functionality. The following figure shows all available connectors and jumpers on the PIC32CM MC00 Curiosity Pro.

Figure 4-2. PIC32CM MC00 Curiosity Pro Connector Overview

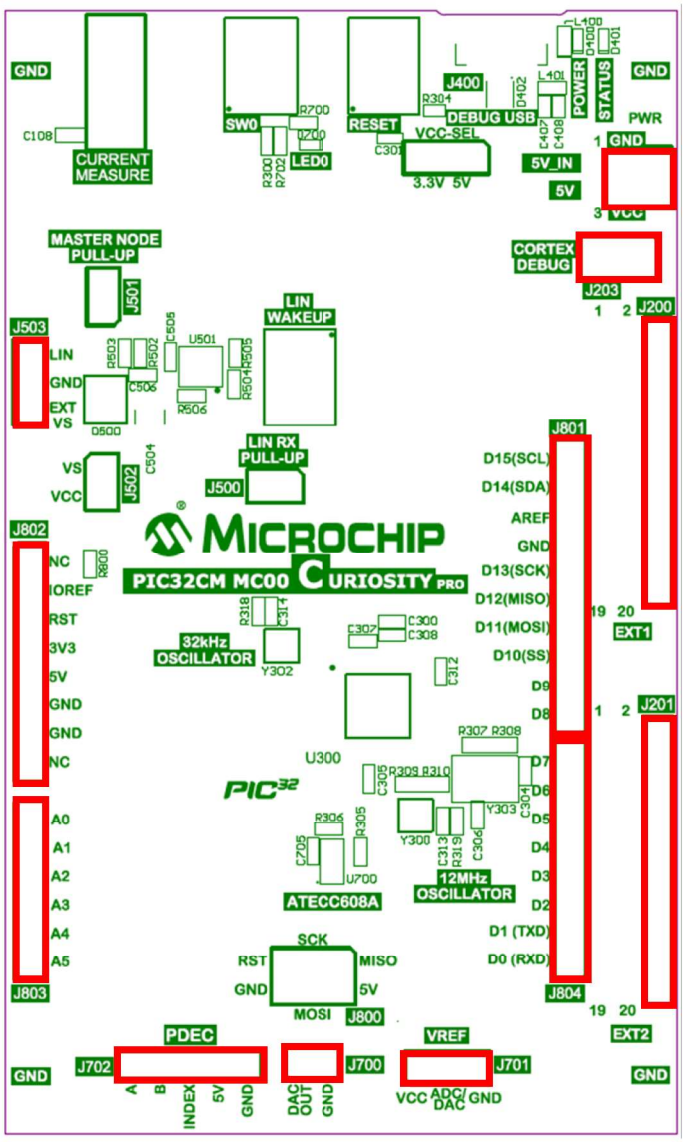

4.2.1 Curiosity Pro Extension Headers

The PIC32CM MC00 Curiosity Pro headers EXT1 and EXT2 offers access to the I/O of the microcontroller to expand the board, for example, by connecting the extensions to the board. These headers are based on the standard extension header specified in the Curiosity Pro Standard Extension Header. The headers have a pitch of 2.54 mm.

Table 4-1. Extension Header EXT1

Pin on EXT1	PIC32CM MC00 pin	Function	Shared Functionality
1	-	ID	-
2	-	GND	-
3	PB09	ADC(+)	Shield
4	PB08	ADC(-)	Shield
5	PA20	GPIO1	Shield

.....continued

Pin on EXT1	PIC32CM MC00 pin	Function	Shared Functionality
6	PA21	GPIO2	Shield
7	PB10	PWM(+)	-
8	PB11	PWM(-)	-
9	PB02	IRQ/GPIO	Shield
10	PB03	SPI_SS/GPIO	Shield
11	PA12	TWI_SDA	EXT2, Shield, DGI, Crypto
12	PA13	TWI_SCL	EXT2, Shield, DGI, Crypto
13	PA23	USART_RX	EXT2, Shield
14	PA22	USART_TX	EXT2, Shield
15	PA17	SPI_SS_A	DGI, PDEC
16	PA18	SPI_MOSI	EXT2, Shield, DGI, PDEC
17	PA16	SPI_MISO	EXT2, Shield, DGI, PDEC
18	PA19	SPI_SCK	EXT2, Shield, DGI
19	-	GND	-
20	-	VCC	-

Table 4-2. Extension Header EXT2

Pin on EXT2	PIC32CM MC00 pin	Function	Shared Functionality
1	-	ID	-
2	-	GND	-
3	PA08	ADC(+)	Shield
4	PA09	ADC(-)	Shield
5	PA10	GPIO1	Shield, LIN, DGI
6	PA11	GPIO2	Shield, LIN, DGI
7	PB22	PWM(+)	Shield
8	PB23	PWM(-)	Shield
9	PA28	IRQ/GPIO	-
10	PA27	SPI_SS_B/GPIO	Shield
11	PA12	TWI_SDA	EXT1, Shield, DGI, Crypto
12	PA13	TWI_SCL	EXT1, Shield, DGI, Crypto
13	PA23	USART_RX	EXT1, Shield
14	PA22	USART_TX	EXT1, Shield
15	PA15	SPI_SS_A	-
16	PA18	SPI_MOSI	EXT1, Shield, DGI, PDEC
17	PA16	SPI_MISO	EXT1, Shield, DGI, PDEC
18	PA19	SPI_SCK	EXT1, Shield, DGI
19	-	GND	-

.....continued

Pin on EXT2	PIC32CM MC00 pin	Function	Shared Functionality
20	-	VCC	-

4.2.2 Arduino Connectors

The PIC32CM MC00 Curiosity Pro implements Arduino shield connectors based on the Arduino Uno. All references to Arduino pin names are taken from the official Arduino schematics of the Arduino Uno.

⚠ CAUTION The target section of the PIC32CM MC00 Curiosity Pro can be powered by 3.3V or 5.0V. The maximum voltage the I/O pins can tolerate depends on the supply voltage. Providing higher voltages like 5V to an I/O pin when the PIC32CM1216MC00048 is powered by 3.3V could damage the board.

Info: All pins do not have same functionality as on the Arduino Uno on the shield connectors. Each shield must be checked for compatibility before it is connected.

Table 4-3. J802 - Power

Pin on J802	PIC32CM MC00 pin	Arduino pin name	Function	Shared functionality
1	-	RFU	-	-
2	-	IOREF	VCC_TARGET_P3V3_P5V0	-
3	RESETN	RESET	TARGET_RESET	-
4	-	3.3V	VCC_P3V3	-
5	-	5V	VCC_P5V0	-
6	-	GND	GND	-
7	-	GND	GND	-
8	-	VIN	VCC_EXT_P5V0	-

Table 4-4. J803 - Analog

Pin on J803	PIC32CM MC00 pin	Arduino pin name	Function	Shared functionality
1	PB08	ADC0	INN1	EXT1
2	PB09	ADC1	INP1	EXT1
3	PA04	ADC2	AIN4	
4	PA05	ADC3	AIN5	LIN
5	PA08	ADC4	AIN8	EXT2
6	PA09	ADC5	AIN9	EXT2

Table 4-5. J804 - Digital Low

Pin on J804	PIC32CM MC00 pin	Arduino pin name	Function	Shared functionality
1	PA23	D0/RX0	SERCOM3 PAD1 UART RX	EXT1, EXT2
2	PA22	D1/TX0	SERCOM3 PAD0 UART TX	EXT1, EXT2
3	PA20	D2	GPIO	EXT1, DGI

.....continued				
Pin on J804	**PIC32CM MC00 pin**	**Arduino pin name**	**Function**	**Shared functionality**
4	PB02	D3	TC2_W0	EXT1
5	PA21	D4	GPIO	EXT1, DGI
6	PB03	D5	TC2_W1	EXT1
7	PB22	D6	TC3_W0	EXT2
8	PA10	D7	GPIO	EXT2, LIN, DGI

Table 4-6. J801 - Digital High

Pin on J801	PIC32CM MC00 pin	Arduino pin name	Function	Shared functionality
1	PA11	D8	GPIO	EXT2, LIN, DGI
2	PB23	D9	TC3_W1	EXT2
3	PA27	D10 / SPI-SS	GPIO	EXT2
4	PA18	D11 / SPI-MOSI	SERCOM1 PAD2	EXT1, EXT2, DGI
5	PA16	D12 / SPI-MISO	SERCOM1 PAD0	EXT1, EXT2, DGI
6	PA19	D13 / SPI-SCK	SERCOM1 PAD3	EXT1, EXT2, DGI
7	-	GND	-	-
8	PA03	AREF	ADC / DAC VREFA	VREF (J701)
9	PA12	D14/SDA	SERCOM2 PAD0	EXT1, EXT2, Crypto, and DGI
10	PA13	D15/SCL	SERCOM2 PAD1	EXT1, EXT2, Crypto, and DGI

Table 4-7. J800 - SPI

Pin on J800	PIC32CM MC00 pin	Arduino pin name	Function	Shared functionality
1	PA16	MISO	SERCOM5 PAD0	EXT1, EXT2, DGI, PDEC
2	-	**5V**	VCC_TARGET_P3V3_P5V0	-
3	PA19	SCK	SERCOM5 PAD3	EXT1, EXT2, DGI
4	PA18	MOSI	SERCOM5 PAD2	EXT1, EXT2, DGI, PDEC
5	RESETN	RESET	TARGET_RESET	-
6	-	GND	GND	-

4.2.3 VCC Selection Header (J102)

The PIC32CM MC00 Curiosity Pro has a 3-pin header labeled VCC_SEL on the board. This header can be used to select between 3.3V and 5.0V as the supply voltage for the PIC32CM1216MC00048, peripherals, and extension headers by placing a jumper on pin 1-2 or pin 2-3. Selecting 5.0V will supply the kit from the USB or an external 5.0V source. Selecting 3.3V will supply the kit from an on-board regulator.

Table 4-8. VCC_SEL Header (J102)

VCC_SEL header pin	Function
1	VCC_P5V0
2	VCC_TARGET
3	VCC_P3V3

4.2.4 VREF Header (J701)

The PIC32CM MC00 Curiosity Pro has a 3-pin header labeled VREF on the board. This header can be used to select/apply a voltage reference to the ADC, DAC, and SDADC. Jumpers can be used to tie ADC/DAC VREF to the kit target voltage from pin 1-2, or external voltages can be applied across pin 2-3.

Table 4-9. VREF Header (J701)

VREF header pin	Pin / Net	Function
1	VCC_AREF_P3V3_P5V0	Filtered kit target voltage
2	VREFA	ADC/DAC External VREF
3	GND	Ground

4.2.5 DAC Header (J700)

The PIC32CM MC00 Curiosity Pro has a 2-pin header labeled DAC-OUT on the board that is connected to the DAC output of the PIC32CM1216MC00048 and ground.

Table 4-10. DAC Header (J700)

DAC header pin	Pin / Net	Function	Shared functionality
1	PA02	DAC0 output	-
2	GND	Ground	-

4.2.6 Current Measurement Header (J101)

An angled 1x2, 100 mil pin-header marked with MCU current measurement is located at the upper edge of the PIC32CM MC00 Curiosity Pro. All power to the PIC32CM1216MC00048 is routed through this header. To measure the power consumption of the device, remove the jumper and replace it with an ammeter.

⚠ CAUTION Removing the jumper from the pin-header while the kit is powered may cause the PIC32CM1216MC00048 to be powered through its I/O pins. This may cause permanent damage to the device.

4.2.7 Cortex Debug Connector (J203)

The PIC32CM MC00 Curiosity Pro has a 10-pin 50-mil Cortex® Debug Connector that can be used to attach external debuggers to the PIC32CM1216MC00048.

Table 4-11. Cortex Debug Connector

Cortex Debug Connector pin	Pin / Net	Function
1	VCC_TARGET_P3V3_P5V0	PIC32CM1216MC00048 voltage
2	SWDIO	SWD data signal
3	GND	Ground
4	SWCLK	SWD clock signal
5	GND	Ground
6	-	-
7	-	-
8	-	-
9	GND	Ground
10	RESETN	Target reset signal

4.3 Peripherals

4.3.1 LED

There is one yellow LED available on the PIC32CM MC00 Curiosity Pro board that can be turned on and off. The LED is activated by driving the connected I/O line to low.

Table 4-12. LED Connection

PIC32CM MC00 pin	Function	Shared functionality
PA24	Yellow LED0	-

4.3.2 Mechanical Buttons

PIC32CM MC00 Curiosity Pro contains two mechanical buttons connected to the PIC32CM MC00. One button is the RESET button connected to the reset line and the other is a generic user configurable button. When a button is pressed it will drive the I/O line to GND.

Info: No pull-up resistor is connected to the generic user button. User must enable the internal pull-up in the PIC32CM MC00 to use the button.

Table 4-13. Mechanical Buttons

PIC32CM MC00 pin	Function	Shared functionality
RESETN	RESET	Shield and EDBG
PA25	SW0	-

4.3.3 Crystals

The PIC32CM MC00 Curiosity Pro kit contains one mounted 32.768 kHz oscillator and a footprint for higher frequency crystals that can be used as clock sources for the PIC32CM MC00. The crystals have zero-ohm resistor jumpers next to them that can be used to isolate the oscillator in the event both crystal and oscillator are simultaneously populated. Information about clock calibration and compensation can be found in the Application Note AT03155.

The footprint for the external crystal is based on the Epson® TSX-3225 series.

Table 4-14. External 32.768 kHz Crystal

PIC32CM MC00 pin	Function	Shared functionality
PA00	XIN32	-
PA01	XOUT32	-

Table 4-15. External 12 MHz Oscillator Footprint

PIC32CM MC00 pin	Function	Shared functionality
PA14	XIN	-
PA15	XOUT	EXT2

4.3.4 LIN

An ATA663211 LIN transceiver is mounted on the kit to convert the LIN signals from the SERCOM module in the PIC32CM MC00 device. The LIN compatible signals are available at a 3-pin header.

Table 4-16. LIN Transceiver

PIC32CM MC00 pin	Function	ATA663211 function	Shared functionality
PA10	SERCOM0 PAD[2] LIN TX	LIN TXD	EXT2, Shield, DGI
PA11	SERCOM0 PAD[3] LIN RX	LIN RXD	EXT2, Shield, DGI
PA05	GPIO	LIN EN	Shield

Table 4-17. LIN Header (J503)

LIN header pin	Function
1	EXT VS
2	GND
3	LIN

Table 4-18. Master Node Pull-up Enable Header (J501)

LIN header pin	Function
1	LIN
2	1kΩ pull-up to VS

Table 4-19. LIN VCC Power J502

LIN header pin	Function
1	VS
2	VCC_TARGET_P3V3_P5V0

4.3.5 Crypto Footprint

Several of the Microchip security devices, including CryptoAuthentication devices like the ATECC608A, requires only an I^2C interface to work, and they share the same packages and pinouts. The PIC32CM MC00 Curiosity Pro has implemented an SOIC-8 footprint for these devices, hence the user may solder them on themselves. The following table shows all the connections between the footprints and the PIC32CM1216MC00048.

Table 4-20. Crypto Footprint

Pin on footprint	PIC32CM MC00 pin	Function	Shared functionality
1	-	NC	-
2	-	NC	-
3	-	NC	-
4	-	GND	-
5	PA12 [SDA]	I^2C data line	EXT1, EXT2, Shield, and DGI
6	PA13 [SCL]	I^2C clock line	EXT1, EXT2, Shield, and DGI
7	-	NC	-
8	-	VCC_Target_P3V3_P5V0	-

4.4 Kit Modifications

The PIC32CM MC00 Curiosity Pro has several resistors and jumpers that can be removed or cut to disconnect I/O pins of the PIC32CM1216MC00048 from connectors and on-board ICs and to disconnect or measure power to different sections.

Table 4-21. Resistors

Designator	From	To	Comment
R609	RESETN	RESET NET	Remove to disconnect the RESETN pin from the reset system
R607	PA07 RX	CDC RX	Remove to disconnect pins from the EDBG level shifters
R610	RESET NET	EDBG RESET	
R611	PA31 SWDIO	DGI SWDIO	
R612	PA30 SWCLK	DGI SWCLK	
R614	PA16 MISO	DGI MISO	
R618	PA10	DGI GPIO0	
R619	PA11	DGI GPIO1	
R620	PA20	DGI GPIO2	
R621	PA21	DGI GPIO3	
R800	RESETN	Arduino shield RESET	Remove to disconnect the reset system from the Arduino shield connectors

Figure 4-3. Resistors Top

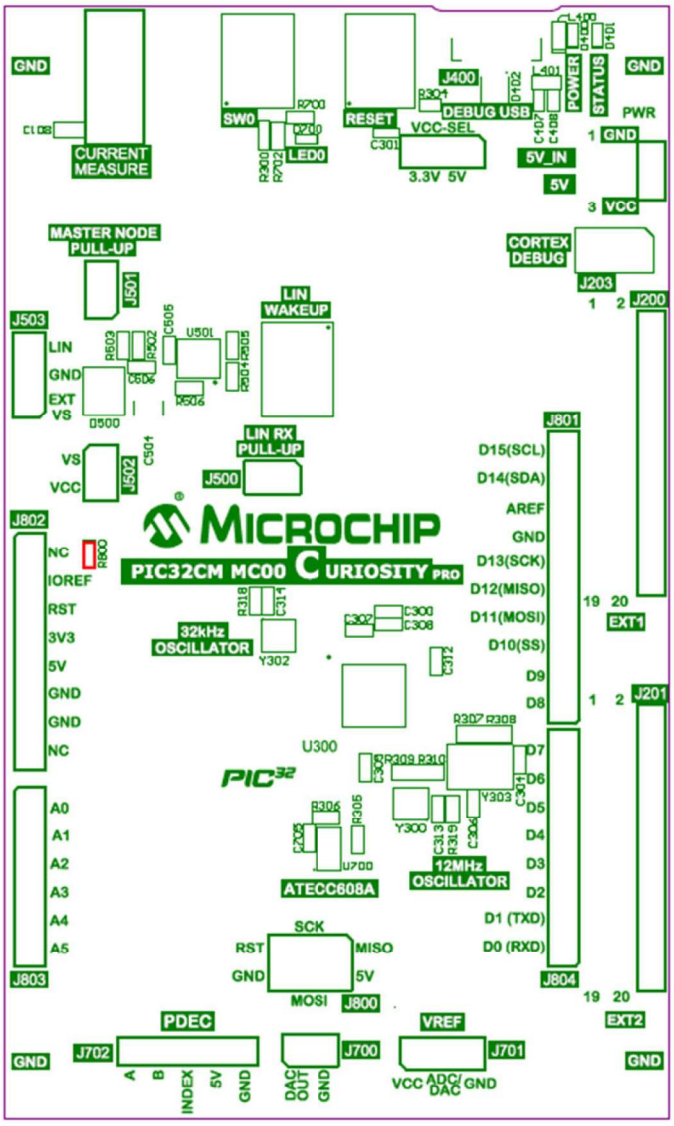

Figure 4-4. Resistors Bottom

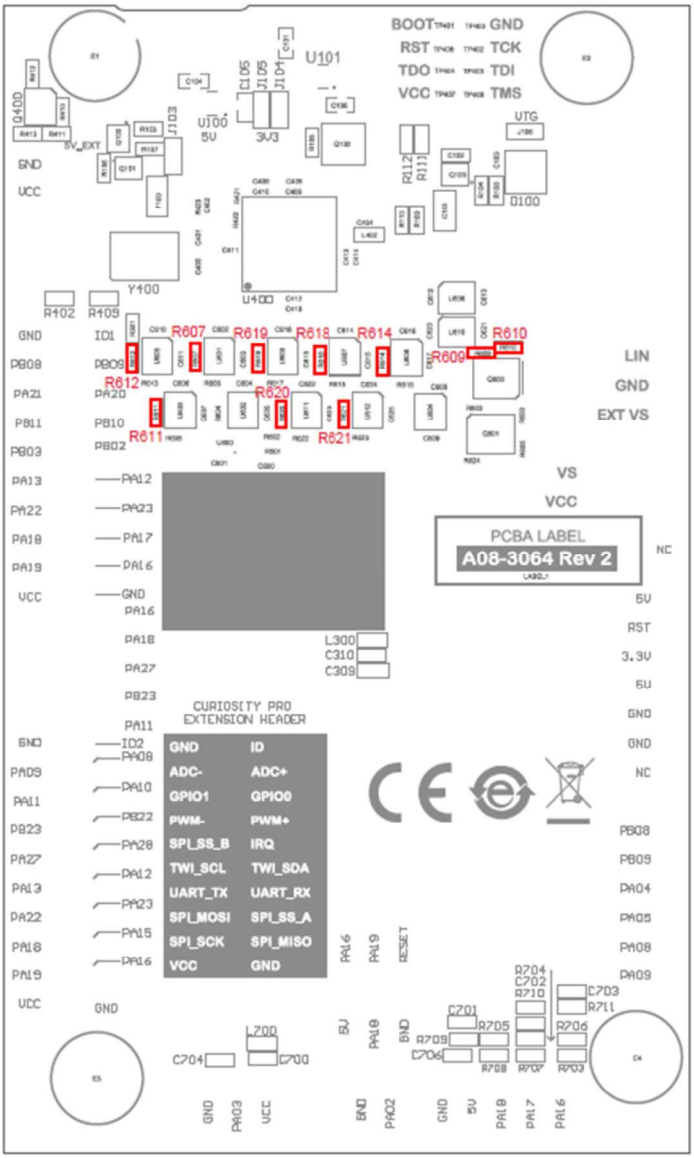

Table 4-22. Jumpers

Designator	From	To	Comment
J101	VCC_TARGET_X_P3V3_P5V0	VCC_TARGET_P3V3_P5V0	Remove this jumper (JS100) to measure current to the MCU section
J102	VCC_IN_P5V0 (pin 1) and VCC_P3V3_TARGET (pin 3)	VCC_TARGET_SWITCH_P3V3_P5V0	Use this jumper (JS101) to select either 5.0V or 3.3V voltage to the Target section. Default setting in production is 3.3V.

.....continued

Designator	From	To	Comment
J103	VCC_IN_P5V0	VCC_P5V0	Cut this jumper to measure current from the 5.0V input MUX section. The footprint is 0603 sized.
J104	3.3V linear regulator output for Target and MCU sections	VCC_P3V3	Cut this jumper to measure current to the Target and MCU sections. The footprint is 0603 sized.
J105	3.3V linear regulator output for EDBG selection	VCC_EDBG_P3V3	Cut this jumper to measure current to the EDBG section. The footprint is 0603 sized.
J106	VCC_TARGET_X_P3V3_P5V0	VCC_TARGET_P3V3_P5V0	Cut this jumper to measure current to the Target section. The footprint is 0603 sized.
R307/R308	PA15_XOUT	12 MHz crystal pin	Relocate zero-ohm resistor to connect XOUT to external crystal. The footprint is 0603 sized.
R309/R310	PA14_XIN	12 MHz crystal pin	Relocate zero-ohm resistor to connect XOUT to external crystal. The footprint is 0603 sized.
J501	LIN signal	Pull-up resistor to VS voltage	Mount this jumper (JS501) to set the LIN transceiver as Master node. Default setting in production is mounted.
J502	VS_LIN	VCC_TARGET_P3V3_P5V0	Mount this jumper (JS502) to power the LIN transceiver from VCC_TARGET_P3V3_P5V0. Remove this jumper when the LIN transceiver is powered from the LIN bus. Default setting in production is DNP.

Figure 4-5. Jumpers Top

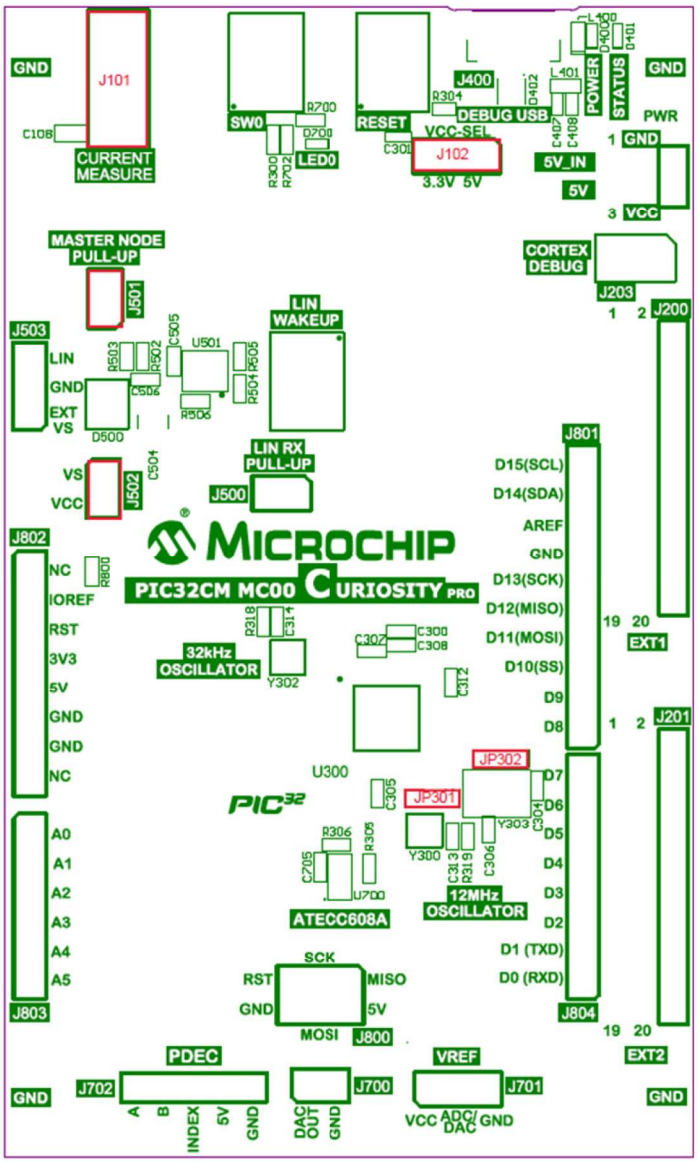

Figure 4-6. Jumpers Bottom

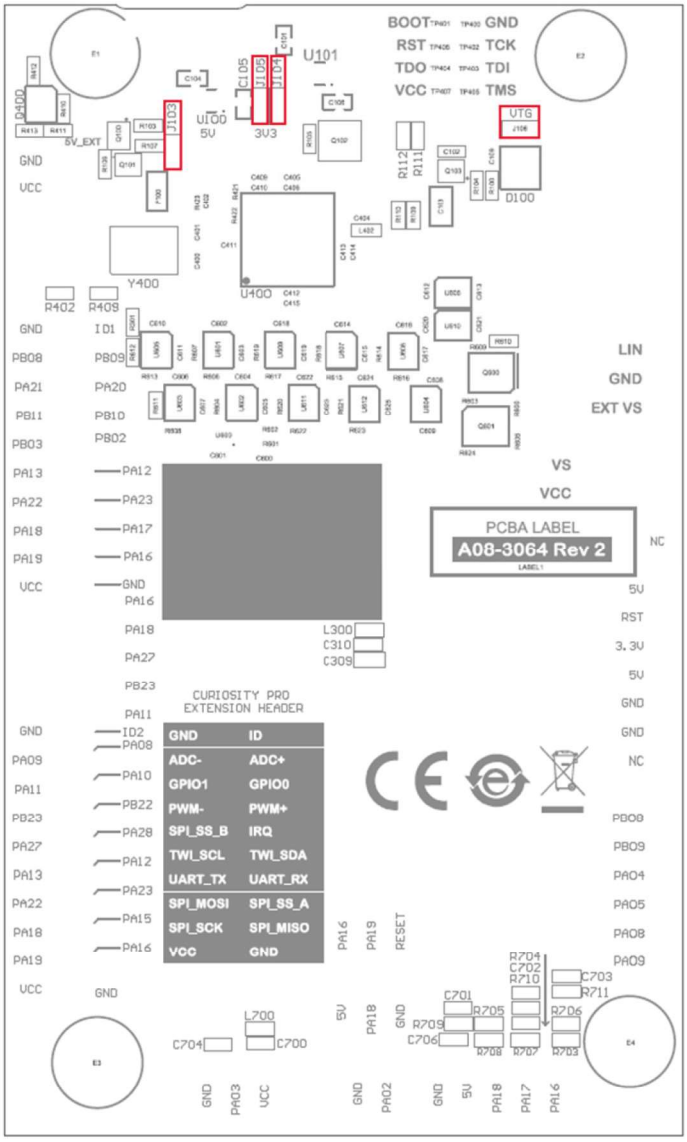

4.5 Embedded Debugger Implementation

The PIC32CM MC00 Curiosity Pro contains an Embedded Debugger (EDBG) that can be used to program and debug the PIC32CM1216MC00048 using Serial Wire Debug (SWD). The Embedded Debugger also include a Virtual Com port interface over UART, a Data Gateway Interface (DGI) over SPI, and TWI, and it includes four of the PIC32CM MC00 GPIOs. MPLAB X IDE can be used as a front end for the Embedded Debugger.

4.5.1 Serial Wire Debug

The Serial Wire Debug (SWD) uses two pins to communicate with the target. For further information on how to use the programming and debugging capabilities of the EDBG, refer to “Embedded Debugger”.

Table 4-23. SWD Connections

PIC32CM MC00 pin	Function
PA30	SWD clock
PA31	SWD data

4.5.2 Virtual COM Port

The Embedded Debugger acts as a Virtual Com Port gateway by using one of the PIC32CM1216MC00048 UARTs. For further information on how to use the Virtual COM port, refer to “Embedded Debugger”.

Table 4-24. Virtual COM Port Connections

PIC32CM MC00 pin	Function	Shared functionality
PA06	SERCOM0 PAD[2] UART TXD	-
PA07	SERCOM0 PAD[3] UART RXD	-

4.5.3 Data Gateway Interface

The Embedded Debugger features an Data Gateway Interface (DGI) by using either an SPI or I²C. The DGI can be used to send a variety of data from the PIC32CM MC00 to the host PC. For further information on how to use the DGI interface, refer to the “Data Visualizer” and the “EDBG User Guide”.

Table 4-25. DGI Interface Connections when using SPI

PIC32CM MC00 pin	Function	Shared functionality
PA17	GPIO/SPI SS (Slave select) (PIC32CM MC00 is Master)	PDEC
PA16	SERCOM1 PAD[0] SPI MISO (Master In, Slave Out)	EXT1, EXT2, Shield, and PDEC
PA18	SERCOM1 PAD[2] SPI MOSI (Master Out, Slave In)	EXT1, EXT2, Shield, and PDEC
PA19	SERCOM1 PAD[3] SPI SCK (Clock Out)	EXT1, EXT2, Shield

Table 4-26. DGI Interface Connections when using I²C

PIC32CM MC00 pin	Function	Shared functionality
PA12	SERCOM2 PAD[0] SDA (Data line)	EXT1, EXT2, Shield, and Crypto Footprints
PA13	SERCOM2 PAD[1] SCL (Clock line)	EXT1, EXT2, Shield, and Crypto Footprints

Four GPIO lines are connected to the Embedded Debugger. The EDBG can monitor these lines and time stamp pin value changes. This makes it possible to accurately time stamp events in the PIC32CM MC00 application code. For additional information on how to configure and use the GPIO monitoring features, refer to the Data Visualizer and the EDBG User Guide.

Table 4-27. GPIO Lines Connected to the EDBG

PIC32CM MC00 pin	Function	Shared functionality
PA10	GPIO0	Shield and EXT2
PA11	GPIO1	Shield and EXT2
PA20	GPIO2	Shield and EXT1
PA21	GPIO3	Shield and EXT1

5. Appendix

5.1 Getting Started with IAR

IAR Embedded Workbench® for ARM® is a proprietary high efficiency compiler which is not based on GCC. Programming and debugging of the Curiosity Pro kits are supported in IAR™ Embedded Workbench for ARM using the common CMSIS-DAP interface. Some initial settings must be set up in the project to get the programming and debugging to work.

The following steps describe how to get project ready for programming and debugging:

1. Open the project to configure, and then open the **OPTIONS** dialog for the project.
2. In the Category section, select **General Options**.
3. Click the **Target** tab, and then select the device for the project or the core of the device (if not listed).

Figure 5-1. Select Target Device

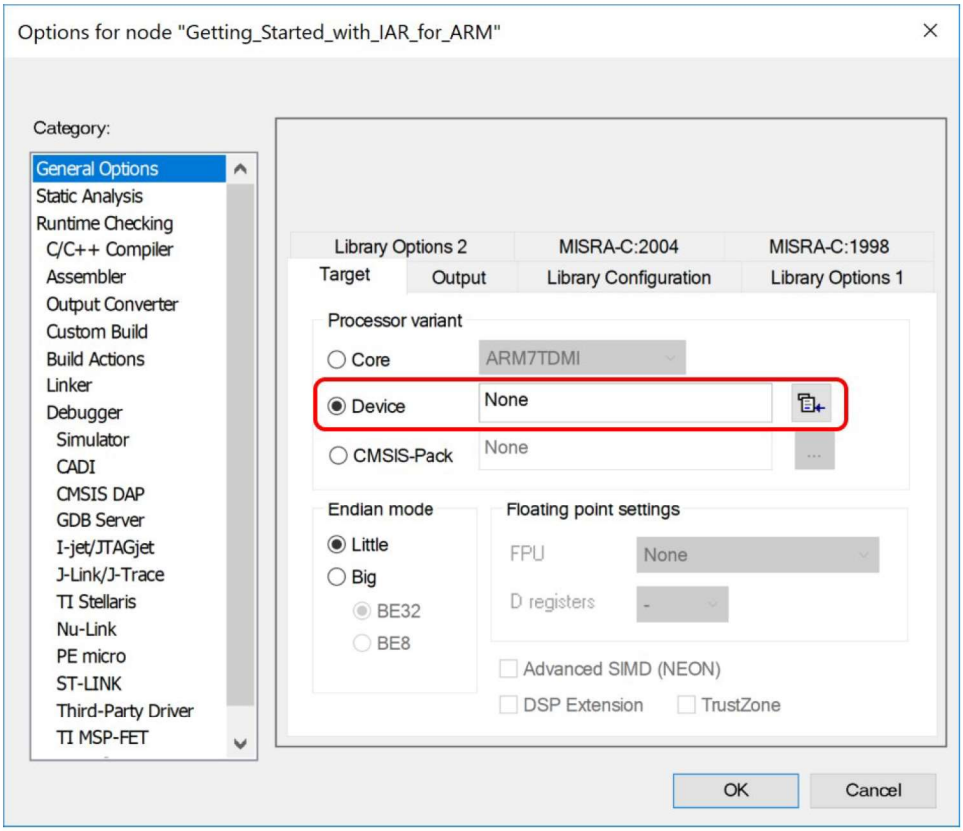

4. In the Category section, select **Debugger**.
5. Click the **Setup** tab, and then select **CMSIS DAP** as the driver.

Figure 5-2. Select Debugger

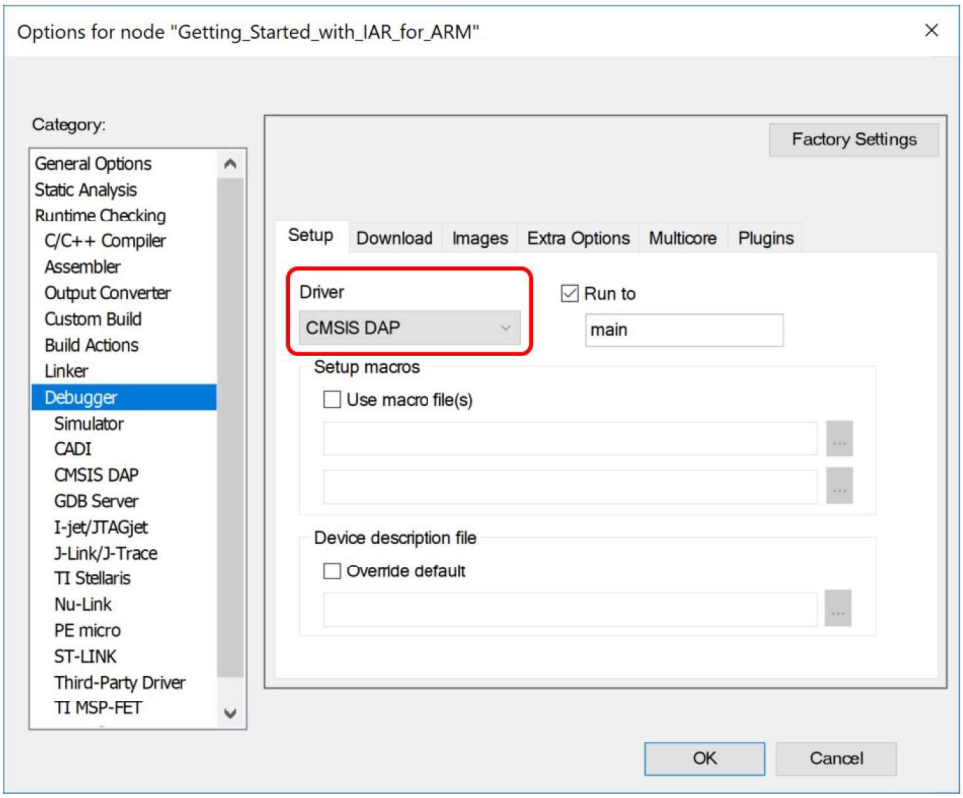

6. In the Category section, select **Debugger**.
7. Click the **Download** tab, and then select the check box for **Use flash loader(s)**.

Figure 5-3. Configure Flash Loader

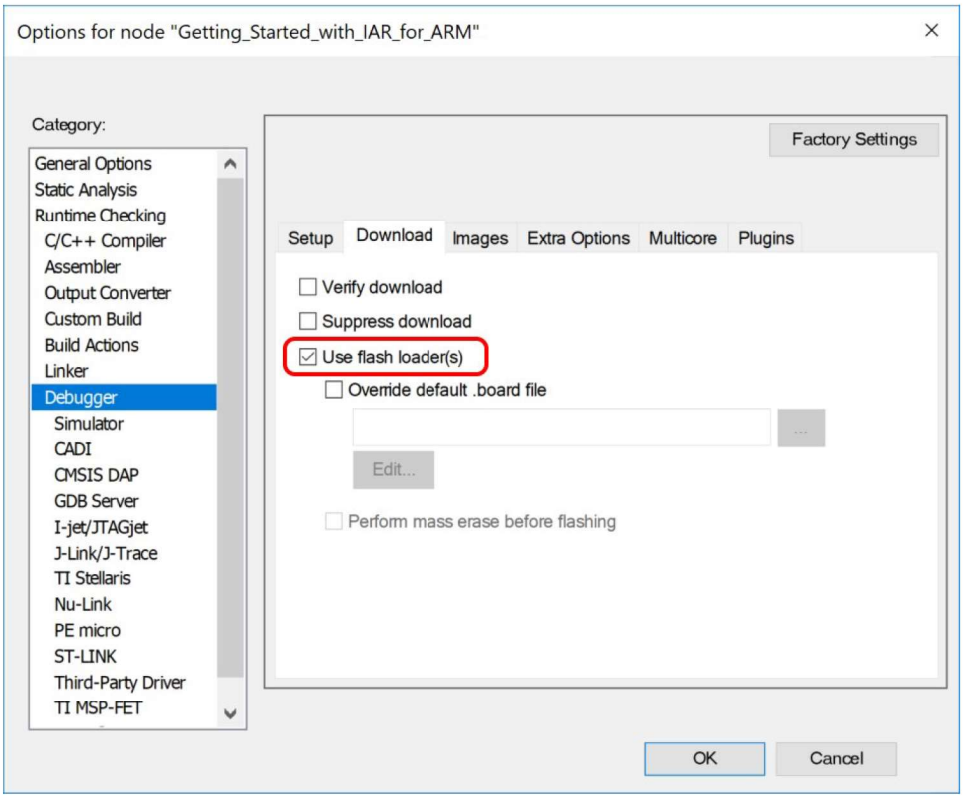

8. In the Category section, *Debugger* > *CMSIS DAP*.
9. Click the **Setup** tab, and then select **System (default)** as the Reset method.

Figure 5-4. Configure Reset

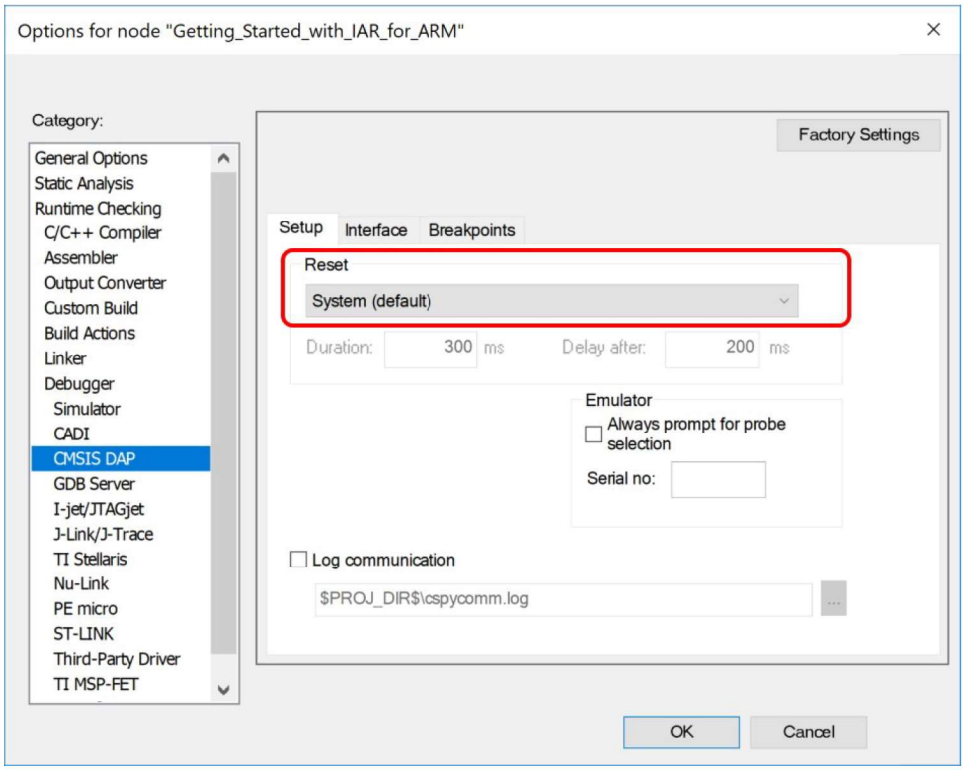

10. In the Category section, *Debugger* > *CMSIS DAP*.
11. Click the **Interface** tab, and then select **SWD** as the interface, and optionally select the **Interface speed**.

Figure 5-5. Configure Interface

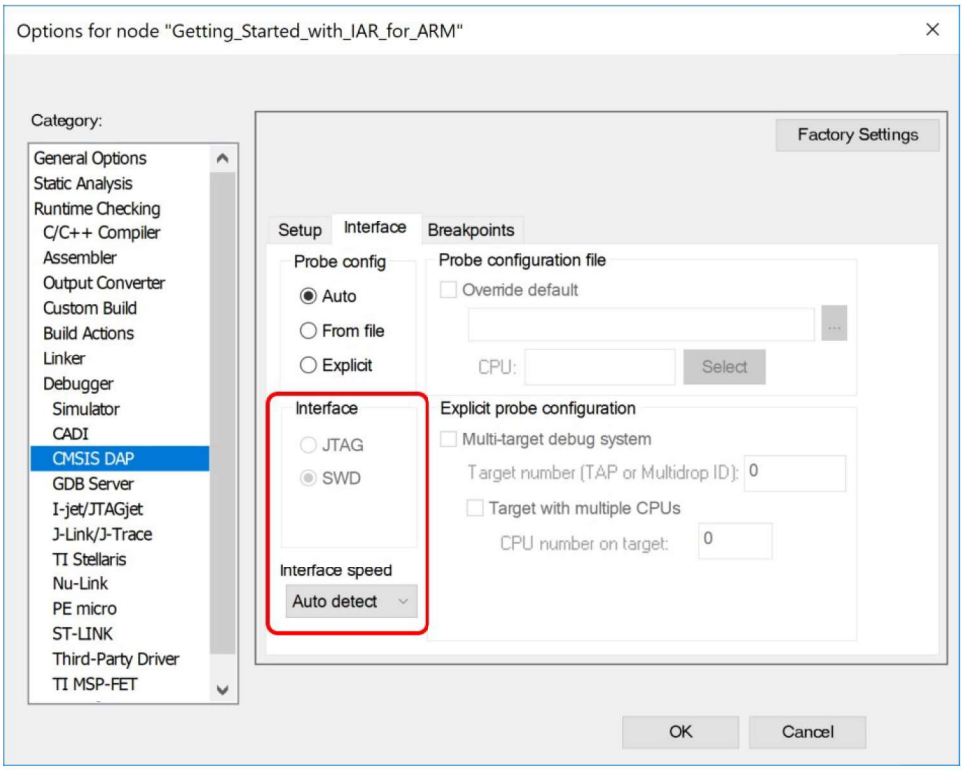

5.2 Identifying Product ID and Revision

The revision and product identifier of the Curiosity Pro boards can be found in two ways: either through MPLAB X IDE or by looking at the sticker on the bottom of the PCB.

By connecting an Curiosity Pro MCU board to a computer with MPLAB X IDE running, an information window will pop up. The first six digits of the serial number, which is listed under kit details, contain the product identifier and revision. Information about connected Curiosity Pro extension boards will also appear in the evaluation kit's window.

The same information can be found on the sticker on the bottom of the PCB. Most of the evaluation kits will print the identifier and revision in plain text as A09-nnnn\rr, where nnnn is the identifier and rr is the revision. Boards with limited space have a sticker with only a QR-code, which contains a serial number string.

The serial number string has the following format:

"nnnnrrssssssssss"

n = product identifier

r = revision

s = serial number

The product identifier for PIC32CM MC00 Curiosity Pro is A09-3343.

5.3 Relevant Links

- MPLAB X IDE: Free IDE for the development of C/C++ and assembler code for microcontrollers.
- Microchip Sample Store: Microchip sample store where you can order samples of devices.
- EDBG User Guide: User guide containing more information about the on-board Embedded Debugger.

- IAR Embedded Workbench® for ARM®: This is a commercial C/C++ compiler that is available for Arm®. There is a 30-day evaluation version as well as a code-size-limited kick-start version available from their website. The code size limit is 16 KB for devices with M0, M0+, and M1 cores and 32 KB for devices with other cores.
- MPLAB Data Visualizer: This is a program used for processing and visualizing data. The Data Visualizer can receive data from various sources, such as serial ports and on-board debugger's Data Gateway Interface, as found on the Curiosity Nano and Curiosity Pro boards.

5.4 Schematics

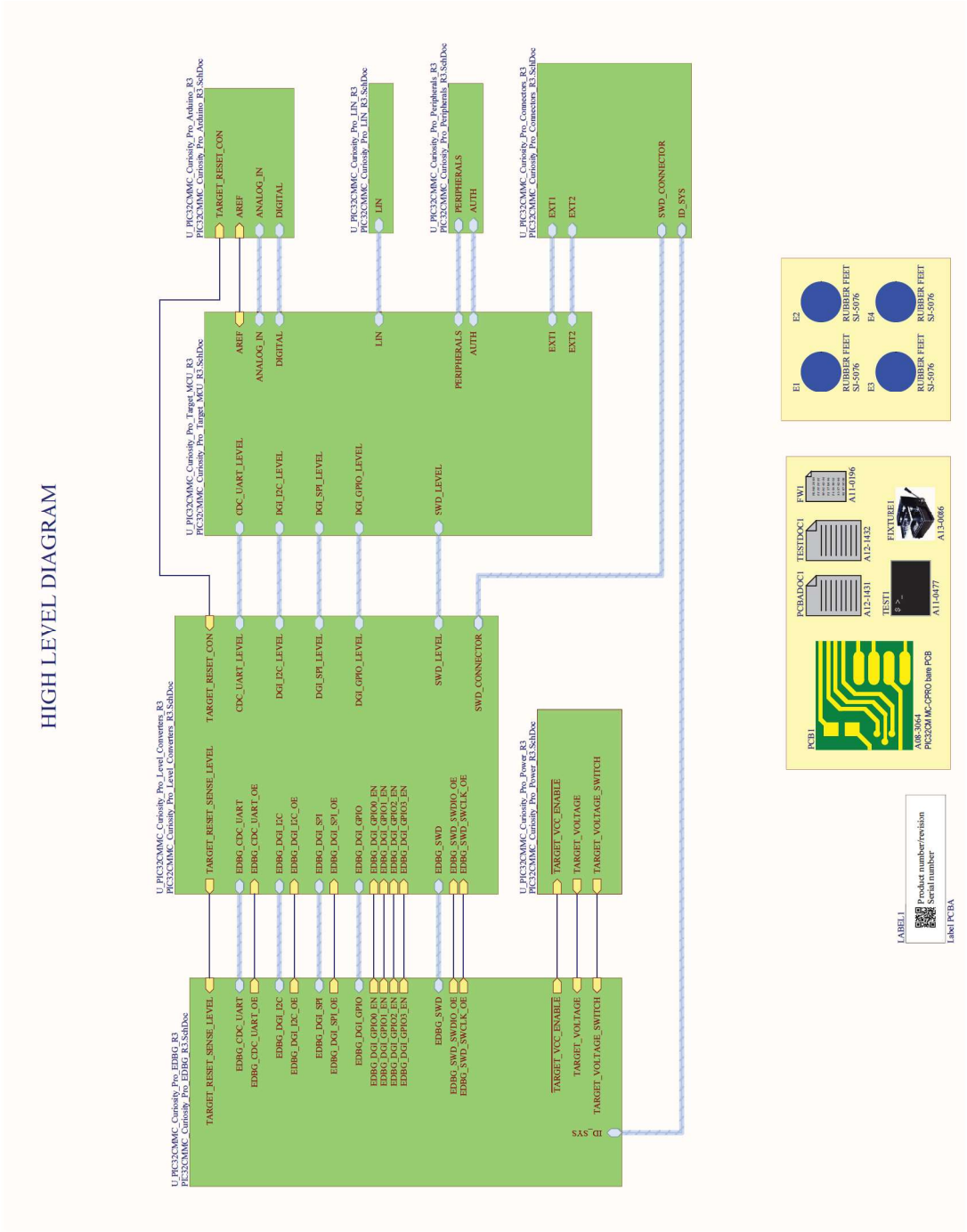

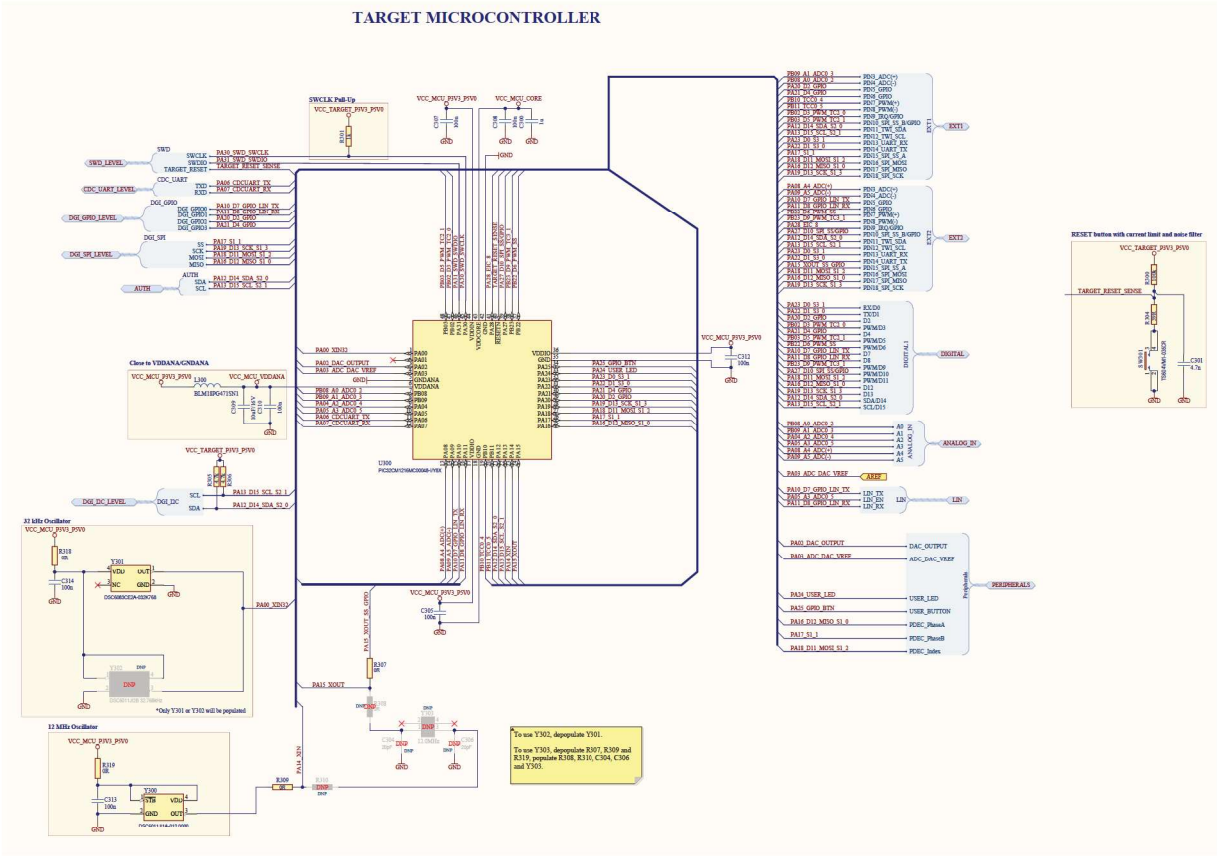
TARGET MICROCONTROLLER
SWCLK Pull-Up
VCC_TARGET_P3V3_P5V0
VCC_MCU_P3V3_P5V0
VCC_MCU_CORE
SWD
SWD_LEVEL
CDC_UART
CDC_UART_LEVEL
DGI_GPIO
DGI_GPIO_LEVEL
DGI_SPI
DGI_SPI_LEVEL
AUTH
Close to VDDANA/GNDANA
VCC_MCU_VDDANA
DGI_I2C_LEVEL
DGI_I2C
32 kHz Oscillator
*Only Y301 or Y302 will be populated
12 MHz Oscillator
RESET button with current limit and noise filter
TARGET_RESET_SENSE
To use Y302, depopulate Y301.
To use Y303, depopulate R307, R309 and R319, populate R308, R310, C304, C306 and Y303.
EXT1
EXT2
DIGITAL
ANALOG_IN
LIN
PERIPHERALS

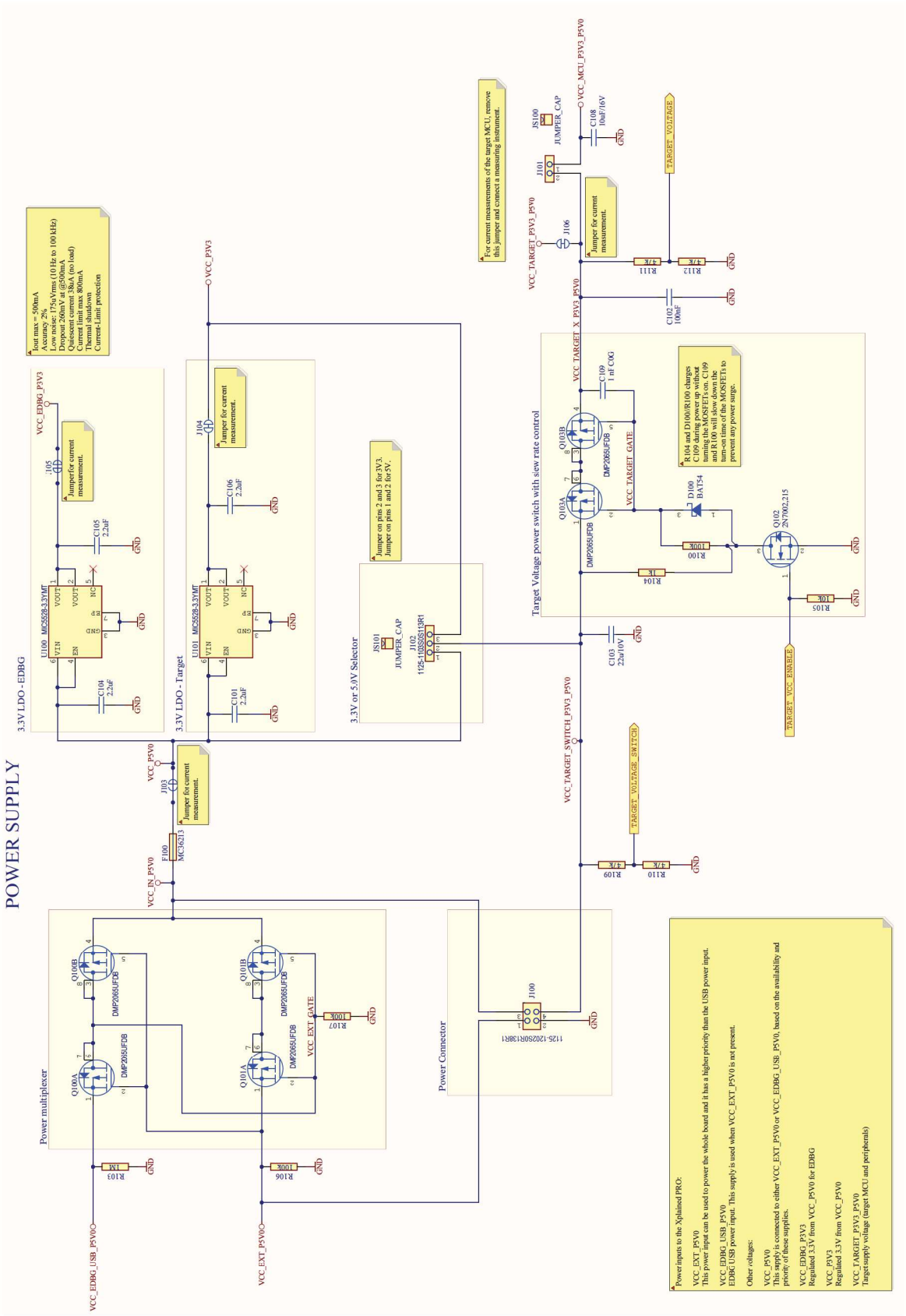
POWER SUPPLY
3.3V LDO - EDBG
3.3V LDO - Target
3.3V or 5.0V Selector
Target Voltage power switch with slew rate control
Power multiplexer
Power Connector
VCC_EDBG_P3V3
VCC_P3V3
VCC_P5V0
VCC_IN_P5V0
VCC_TARGET_SWITCH_P3V3_P5V0
VCC_TARGET_X_P3V3_P5V0
VCC_MCU_P3V3_P5V0
VCC_TARGET_P3V3_P5V0
VCC_EDBG_USB_P5V0
VCC_EXT_P5V0
VCC_EXT_GATE
VCC_TARGET_GATE
TARGET_VOLTAGE
TARGET_VOLTAGE_SWITCHED
TARGET_VCC_ENABLE
Jumper for current measurement.
Jumper on pins 2 and 3 for 3V3.
Jumper on pins 1 and 2 for 5V.
For current measurements of the target MCU, remove this jumper and connect a measuring instrument.
R100 and D100/R100 charges C109 during power up without turning the MOSFETs on. C109 and R100 will slow down the turn-on time of the MOSFETs to prevent any power surge.
Power inputs to the Xplained PRO:
VCC_EXT_P5V0
This power input can be used to power the whole board and it has a higher priority than the USB power input.
VCC_EDBG_USB_P5V0
EDBG USB power input. This supply is used when VCC_EXT_P5V0 is not present.
Other voltages:
VCC_P5V0
This supply is connected to either VCC_EXT_P5V0 or VCC_EDBG_USB_P5V0, based on the availability and priority of these supplies.
VCC_EDBG_P3V3
Regulated 3.3V from VCC_P5V0 for EDBG
VCC_P3V3
Regulated 3.3V from VCC_P5V0
VCC_TARGET_P3V3_P5V0
Target supply voltage (target MCU and peripherals)

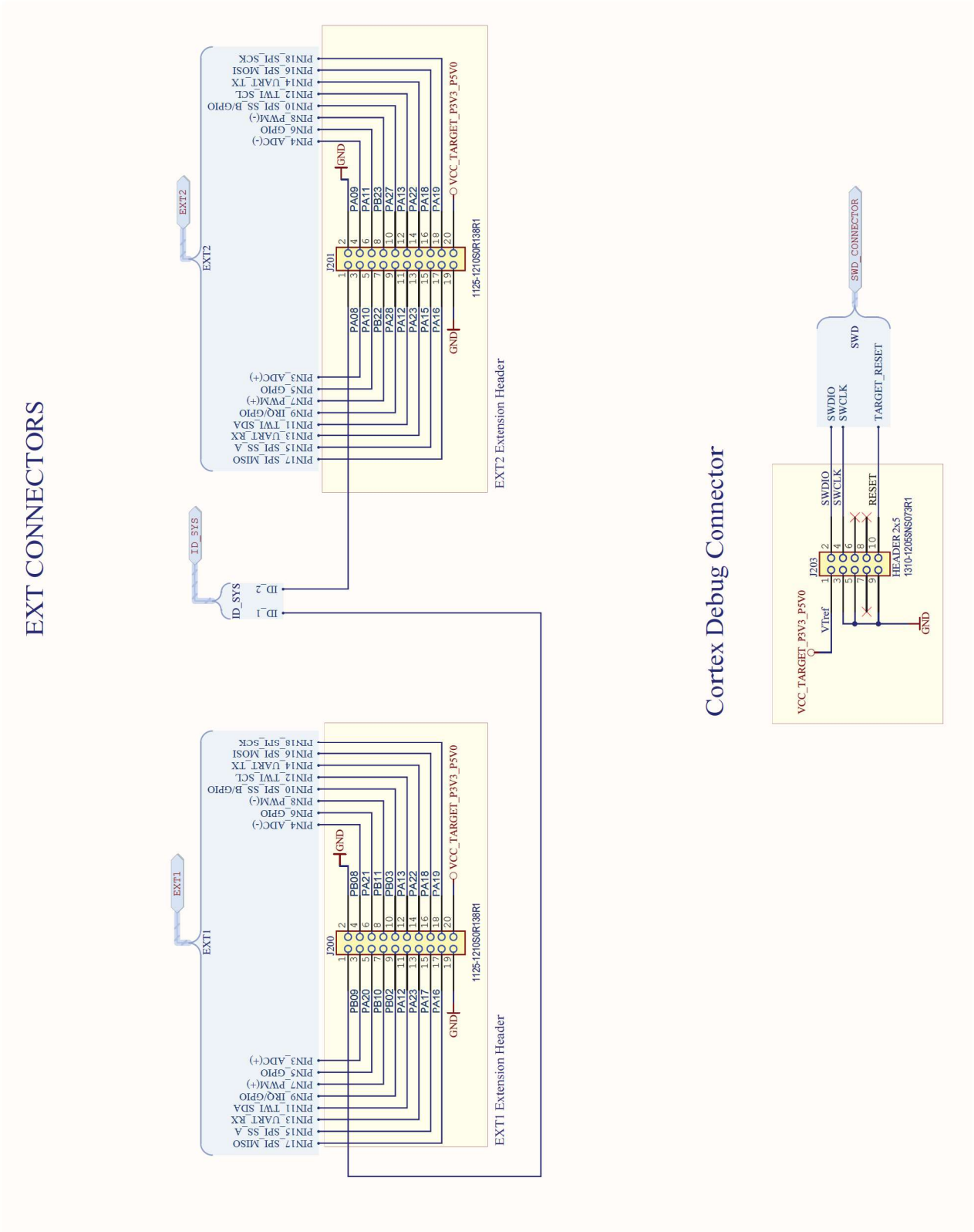
EXT CONNECTORS
EXT2 Extension Header
EXT1 Extension Header
Cortex Debug Connector
SWD_CONNECTOR
SWD
SWDIO
SWCLK
TARGET_RESET
RESET
HEADER 2x5
1310-1205NS073R1
VCC_TARGET_P3V3_P5V0
VTref
GND
J201
J200
J203
1125-1210S0R138R1
ID_SYS
ID_1
ID_2
EXT1
EXT2

EMBEDDED DEBUGGER (EDBG)

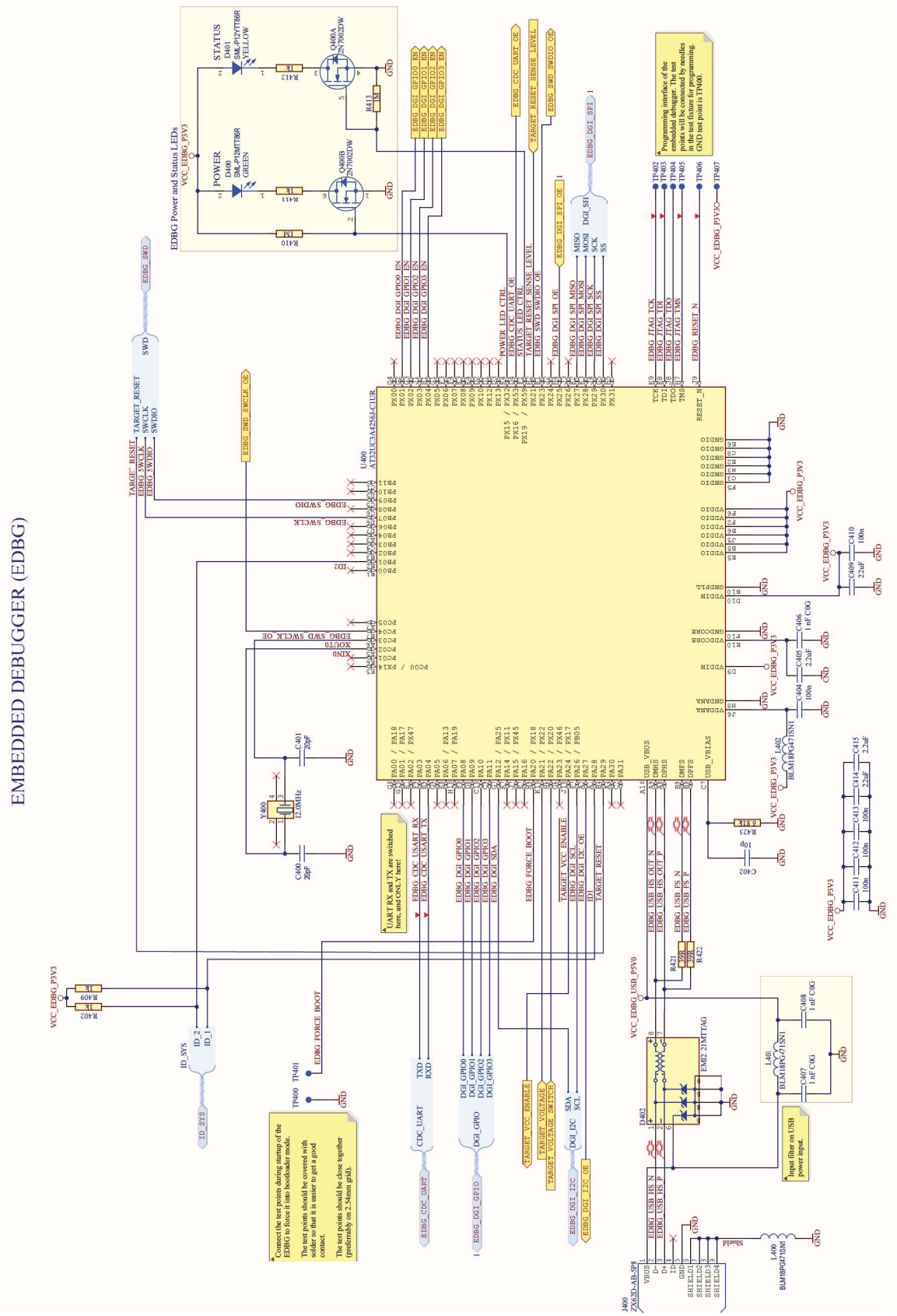

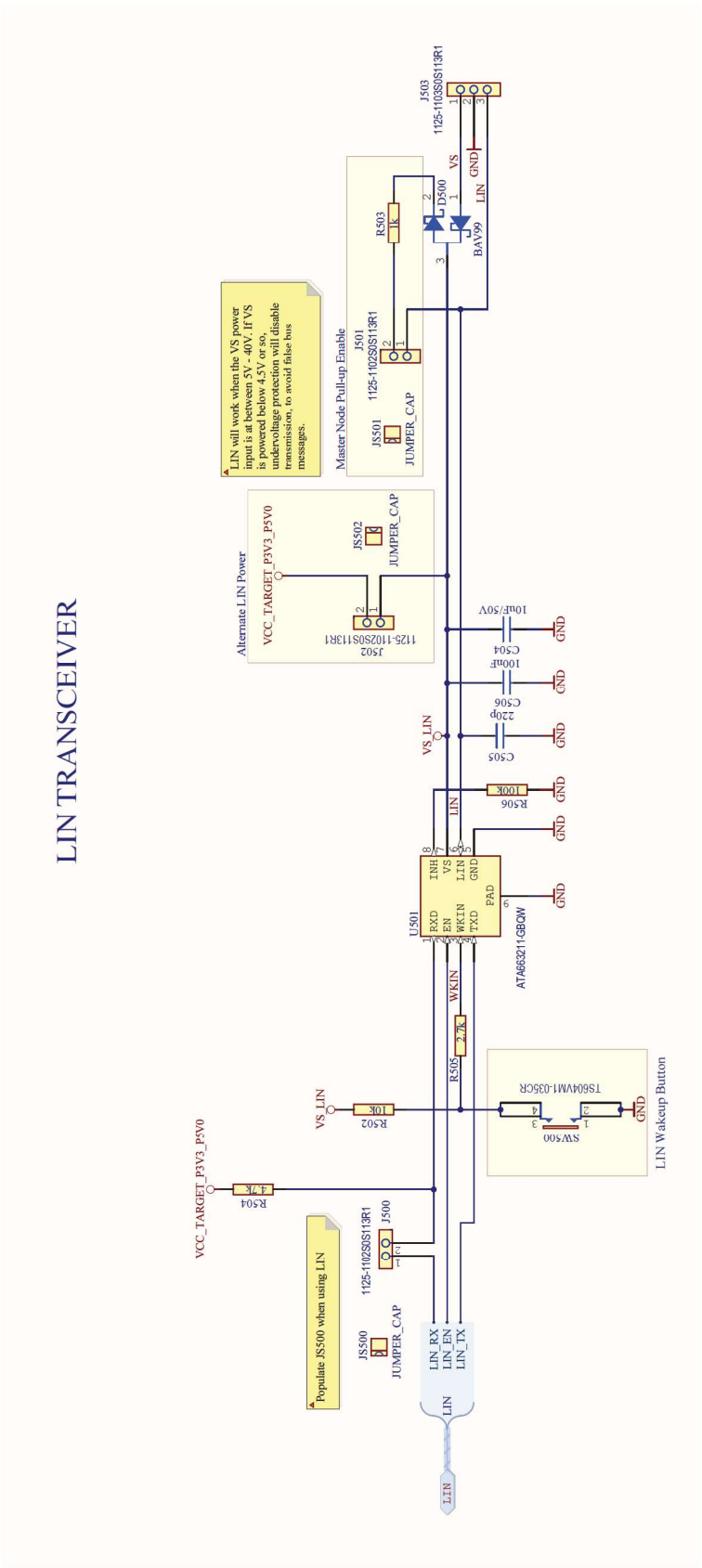
LIN TRANSCEIVER
J503
1125-1103S0S113R1
VS
GND
LIN
D500
BAV99
R503
1k
Master Node Pull-up Enable
J501
1125-1102S0S113R1
JS501
JUMPER_CAP
LIN will work when the VS power input is at between 5V - 40V. If VS is powered below 4.5V or so, undervoltage protection will disable transmission, to avoid false bus messages.
Alternate LIN Power
VCC_TARGET_P3V3_P5V0
JS502
JUMPER_CAP
J502
1125-1102S0S113R1
10uF/50V
C504
100nF
C506
220p
C505
VS_LIN
R506
100K
LIN
U501
INH
VS
LIN
GND
PAD
RXD
EN
WKIN
TXD
ATA663211-GBQW
WKIN
R505
2.2K
TS604VM1-035CR
SW500
LIN Wakeup Button
VS_LIN
R502
10K
VCC_TARGET_P3V3_P5V0
R504
4.7K
Populate JS500 when using LIN
J500
1125-1102S0S113R1
JS500
JUMPER_CAP
LIN_RX
LIN_EN
LIN_TX
LIN
LIN

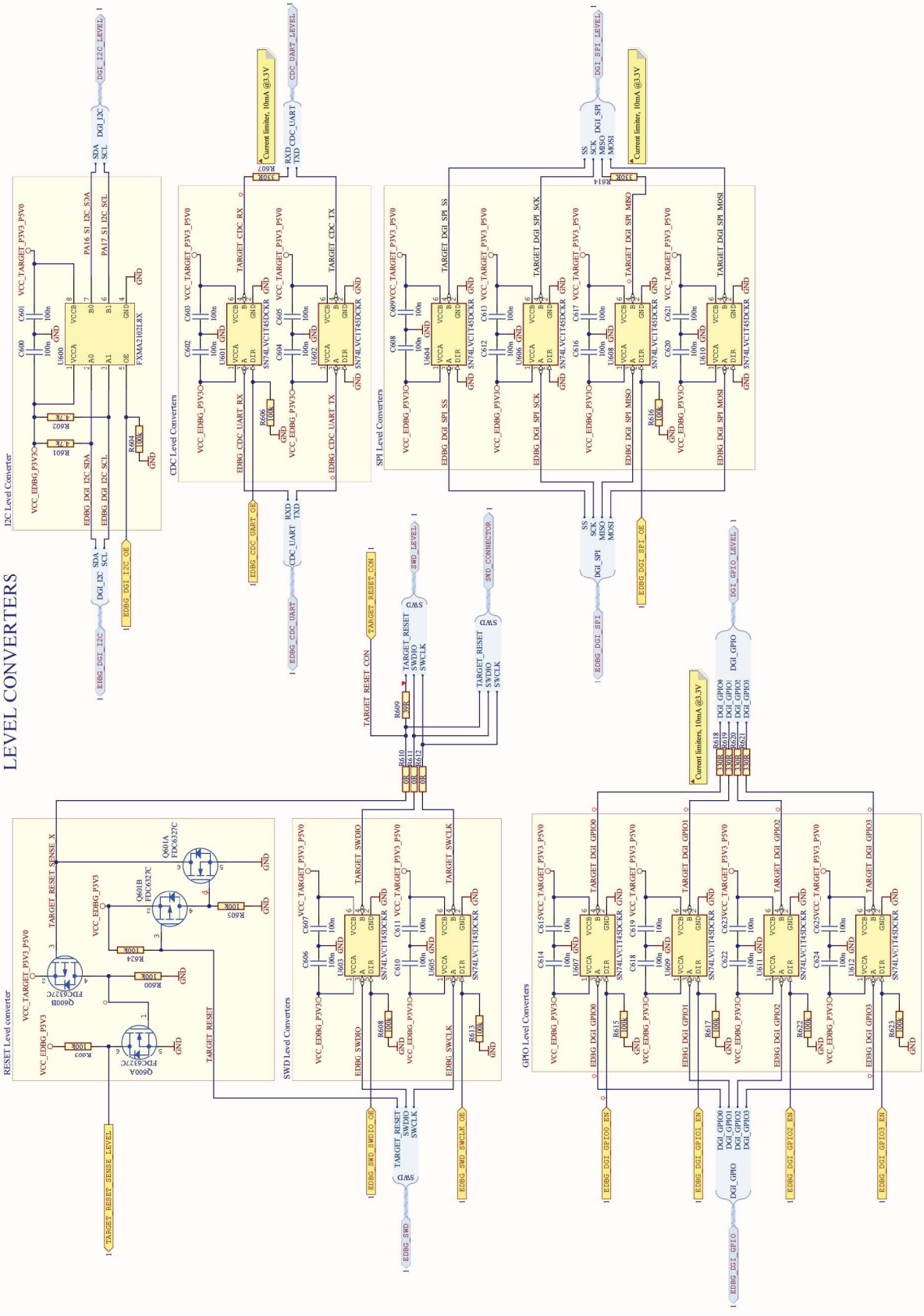
LEVEL CONVERTERS
I2C Level Converter
CDC Level Converters
SPI Level Converters
RESET Level converter
SWD Level Converters
GPIO Level Converters

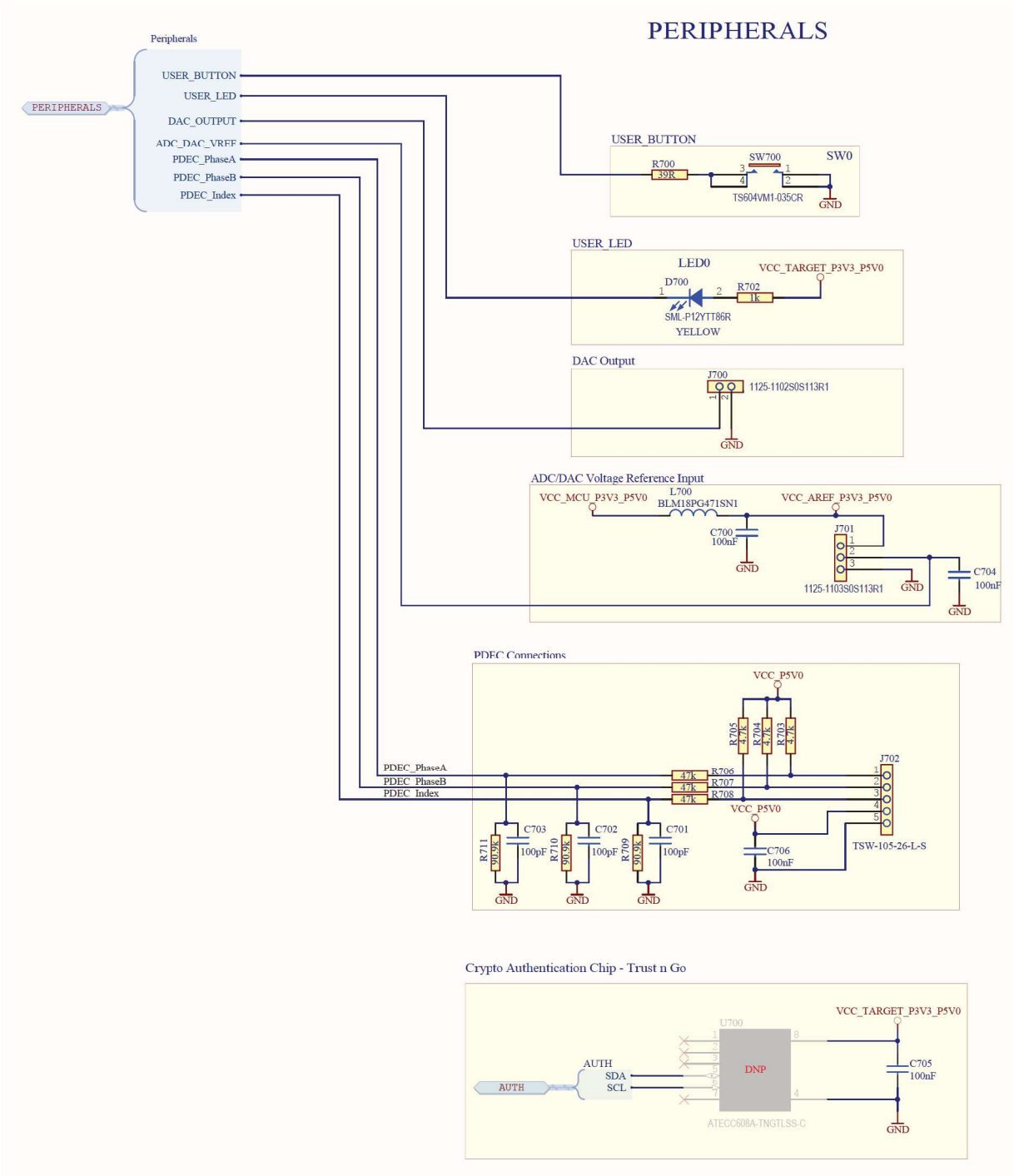
PERIPHERALS
Peripherals
PERIPHERALS
USER_BUTTON
USER_LED
DAC_OUTPUT
ADC_DAC_VREF
PDEC_PhaseA
PDEC_PhaseB
PDEC_Index
USER_BUTTON
R700
39R
SW700
SW0
TS604VM1-035CR
GND
USER_LED
LED0
VCC_TARGET_P3V3_P5V0
D700
R702
1k
SML-P12YTT86R
YELLOW
DAC Output
J700
1125-1102S0S113R1
GND
ADC/DAC Voltage Reference Input
VCC_MCU_P3V3_P5V0
L700
BLM18PG471SN1
VCC_AREF_P3V3_P5V0
C700
100nF
J701
1125-1103S0S113R1
C704
100nF
GND
PDEC Connections
VCC_P5V0
R705
4.7k
R704
4.7k
R703
4.7k
PDEC_PhaseA
PDEC_PhaseB
PDEC_Index
47k
R706
47k
R707
47k
R708
J702
TSW-105-26-L-S
C703
100pF
C702
100pF
C701
100pF
R711
90.9k
R710
90.9k
R709
90.9k
C706
100nF
Crypto Authentication Chip - Trust n Go
VCC_TARGET_P3V3_P5V0
U700
AUTH
SDA
SCL
DNP
C705
100nF
ATECC608A-TNGTLSS-C

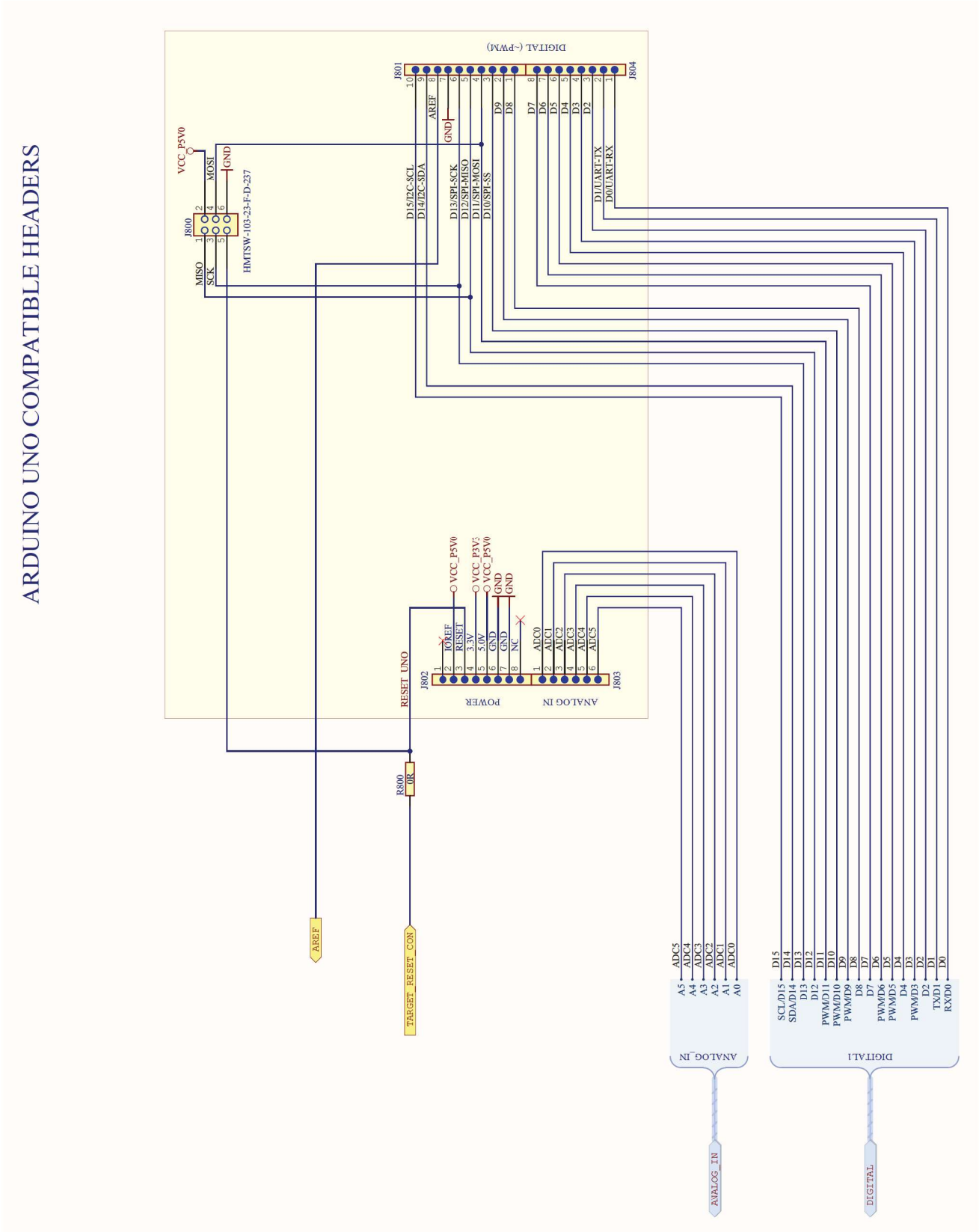
ARDUINO UNO COMPATIBLE HEADERS
DIGITAL (~PWM)
J801
J804
AREF
GND
D15/I2C-SCL
D14/I2C-SDA
D13/SPI-SCK
D12/SPI-MISO
D11/SPI-MOSI
D10/SPI-SS
D9
D8
D7
D6
D5
D4
D3
D2
D1/UART-TX
D0/UART-RX
VCC_P5V0
MOSI
GND
J800
MISO
SCK
HMTSW-103-23-F-D-237
POWER
ANALOG IN
J802
J803
RESET_UNO
IOREF
RESET
3.3V
5.0V
GND
NC
ADC0
ADC1
ADC2
ADC3
ADC4
ADC5
R800
0R
AREF
TARGET_RESET_CON
ANALOG_IN
DIGITAL
SCL/D15
SDA/D14
PWM/D11
PWM/D10
PWM/D9
PWM/D6
PWM/D5
PWM/D3
TX/D1
RX/D0
ANALOG_IN
DIGITAL

5.5 Bill of Materials

Quantity	Designator	Manufacturer	MPN	Value	Description
4	C101, C104, C105, C106	Murata	GRM188R71A225KE15D	2.2uF	Ceramic capacitor, SMD 0603, X7R, 10V, 10%
13	C102, C305, C307, C308, C310, C312, C313, C314, C506, C700, C704, C705, C706	Kemet	C0402C104K4RACTU	100nF	Ceramic capacitor, SMD 0402, X7R, 16V, +/-10%
1	C103	tdk	C2012X5R1A226M/0.85	22u/10V	Ceramic capacitor, SMD 0805, X5R, 10V, Â±20%
2	C108, C309	Taiyo Yuden	EMK107BBJ106MA-T	10uF/16V	Ceramic capacitor, SMD 0603, X5R, 16V, 10UF ± 20% (High Density)
4	C109, C406, C407, C408	Murata	GRM1555C1H102JA01D	1 nF C0G	Ceramic capacitor, SMD 0402, C0G, 50V, +/-5%
1	C300	Kemet	C0402C105K9PAC	1u	Ceramic capacitor, SMD 0402, X5R, 6.3V, +/-10% (de26942)
1	C301	Kemet	C0402C472K4RECAUTO	4.7n	Ceramic capacitor, SMD 0402, X7R, 25V, +/-10% (de35287)
2	C400, C401	TDK	C1005C0G1H200JT	20pF	Ceramic capacitor, SMD 0402, C0G, 50V, +/-5%
1	C402	Yageo	CC0402JRNPO9BN100	10p	Ceramic capacitor, SMD 0402, NP0, 50V, +/-5%
5	C404, C410, C411, C412, C413	Kemet	C0402C104K4RACTU	100n	Ceramic capacitor, SMD 0402, X7R, 16V, +/-10%
4	C405, C409, C414, C415	Kemet	C0402C225M9PAC	2.2uF	Ceramic capacitor, SMD 0402, X5R, 6.3V, +/-20%
1	C504	tdk	CGA6P3X7S1H106K	10uF/50V	Ceramic capacitor, SMD 1210, X7S , 50V, Â±10%
1	C505	Murata Electronics	GCM1555C1H221JA16D	220p	Ceramic capacitor, SMD 0402, X7R, 50V, +/-10%
26	C600, C601, C602, C603, C604, C605, C606, C607, C608, C609, C610, C611, C612, C613, C614, C615, C616, C617, C618, C619, C620, C621, C622, C623, C624, C625	Kemet	C0402C104K4RACTU	100n	Ceramic capacitor, SMD 0402, X7R, 16V, +/-10%
3	C701, C702, C703	Murata	GRM1555C1H101JA01D	100pF	Ceramic Capacitor, SMD 0402, COG, 50V, +/-5%
1	D100	Philips	BAT54	BAT54	Schottky diode, V(rrm)=30V, I(f)=0.1A, V(f)=0.4V (at If = 0.01A), I(r)=0.5uA (at Vrrm), t(rr)=5ns, SMD SOT23
1	D400	ROHM	SML-P12MTT86R	GREEN LED	LED, SMD 0402, Green, Wave length=569nm, 2.1mcd @ (1mA, 1.9Vf)rohm
2	D401, D700	ROHM	SML-P12YTT86R	YELLOW LED	LED, SMD 0402, Yellow, Wave length=586nm, 7.6mcd @ (1mA, 1.9Vf)
1	D402	ON Semiconductor	EMI2121MTTAG	EMI2121MTTAG	EMI2121, SZEMI2121 Single Pair Common Mode Filter with ESD Protection
1	D500	Philips	BAV99	BAV99	High-speed Double Diode
4	E1, E2, E3, E4	3M	SJ-5076	SJ-5076	2.8mm adhesive feet,diam 8.0mm
1	F100	Multicomp	MC36213	MC36213	Resetable PTC fuse, Ih = 0.5A, It = 1.0A, 0805 package
1	J100	WCON	1125-1202S0R138R1	1125-1202S0R138R1	Pin header, 2x2, Right Angle, 2.54mm, THT, Pin In Paste
1	J101	WCON	1125-1102S0R138R1	Pin header 1x2 right angle	1x2 pin header, right angle, 2.54 mm pitch, through-hole
3	J102, J503, J701	WCON	1125-1103S0S113R1	1125-1103S0S113R1	1x3 pin header, 2.54mm pitch, Pin-in-Paste THM
2	J200, J201	WCON	1125-1210S0R138R1	1125-1210S0R138R1	Pin header, 2x10, Right Angle, 2.54mm, THM, Pin In Paste

.....continued

Quantity	Designator	Manufacturer	MPN	Value	Description
1	J203	WCON	1310-1205SNS073R1	1310-1205SNS073R1	2x5 pin header, 1.27mm pitch, THM
1	J400	Hirose Electric Co Ltd	ZX62D-AB-5P8(30)	ZX62D-AB-5P8	Micro USB AB Connector, Standard SMT + DIP
4	J500, J501, J502, J700	WCON	1125-1102S0S113R1	1125-1102S0S113R1	1x2 pin header, 2.54mm pitch, Pin-in-Paste THM
1	J702	Samtec	TSW-105-26-L-S	PIN HEADER 1x5 THM	1x5 pin header, 2.54 mm pitch, THM
1	J800	SAMTEC	HMTSW-103-23-F-D-237	HMTSW-103-23-F-D-237	2x3 pin header, 2.54mm pitch, Pin-in-Paste THM
1	J801	SAMTEC	SSQ-110-21-F-S	SSQ-110-21-F-S	1x10 receptacle pin header, low insertion force, 2.54mm pitch THM, Pin in Paste
2	J802, J804	SAMTEC	SSQ-108-21-F-S	SSQ-108-21-F-S	1x8 receptacle pin header, low insertion force, 2.54mm pitch THM, Pin in Paste
1	J803	Samtec	SSW-106-03-F-S	Arduino Stackable 1x6 header and receptacle	Samtec 2.5mm 1x6 Female Header Straight, THM, H=8.5mm, 10mm Pins, Black insulator
5	JS100, JS101, JS500, JS501, JS502	WCON	3710-6001OS0B01	3710-6001OS0B01	Jumper cap for 2.54mm pinheader
4	L300, L401, L402, L700	Murata	BLM18PG471SN1	BLM18PG471SN1	SMD RF inductor 0603. Z=470Ohm (@100MHz), Max R(dc)=0.65Ohm, Max current=1A
1	L400	Murata	BLM18PG471SN1	BLM18PG471SN1	SMD RF inductor 0603. Z=470Ohm (@100MHz), Max R(dc)=0.20Ohm, Max current=1A
1	LABEL1	ACT Logimark AS	505462	Label PCBA	PCBA identification label PP Top White Gloss
3	Q100, Q101, Q103	Diodes Incorporated	DMP2065UFDB-7	DMP2065UFDB	MOSFET 20V 4.5A DUAL P-CHAN, Rds 50 mOhms, Vgs 12V, Vds -20
1	Q102	NXP	2N7002,215	2N7002,215	N-Channel MOSFET. 60V, 0.300A continuous, 1.2A Peak. RDS(ON) = 3.8Ohm@VGS=4.5V, VGS(th)<2.5V
1	Q400	Fairchild	2N7002DW	2N7002DW	Dual N-Channel MOSFET, 60V, 115mA cont,RDS(ON) < 7.5 Ohm @50mA@5V, SOT-363
2	Q600, Q601	Fairchild	FDC6327C	FDC6327C	Dual N/P-ch MOSFET, 20V, 2.7A/-1.9A cont, 8A/-8A pulse, RDS(ON)<0.08/0.17Ohm@VGS=4.5V, VGS(th)<1.5/-1.5V, SSOT6
4	R100, R106, R107, R506	Panasonic Electronic Components	ERJ-2RKF1003X	100k	Thick film resistor, SMD 0402, 1/16W, 1%
3	R103, R410, R413	Yageo	RC0402FR-071ML	1M	Thick film resistor, SMD 0402, 1/16W, 1%
8	R104, R301, R402, R409, R411, R412, R503, R702	Yageo	RT0402FRE071KL	1k	Thick film resistor, SMD 0402, 1/16W, 1%
2	R105, R502	Vishay	CRCW040210K0FKED	10k	Thick film resistor, SMD 0402, 1/16W, 1%
7	R109, R110, R111, R112, R706, R707, R708	Yageo	RC0402FR-0747KL	47k	Thick film resistor, SMD 0402, 1/16W, 1%
14	R300, R600, R603, R604, R605, R606, R608, R613, R615, R616, R617, R622, R623, R624	Panasonic Electronic Components	ERJ-2RKF1003X	100k	Thick film resistor, SMD 0402, 1/16W, 1%
4	R304, R421, R422, R609	Yageo	RC0402FR-0739RL	39R	Thick film resistor, SMD 0402, 1/16W, 1%
6	R305, R306, R504, R703, R704, R705	Yageo	RC0402FR-074K7L	4.7k	Thick film resistor, SMD 0402, 1/16W, 1%
2	R307, R309	Yageo	RC0603JR-070RL	0R	Thick film resistor, SMD 0603, 1/10W, 1%

.....continued

Quantity	Designator	Manufacturer	MPN	Value	Description
2	R318, R319	Stackpole Electronics Inc	RMCF0402ZT0R00	0R	RES 0.0 OHM 1/16W 0402 SMD
1	R423	Yageo	RC0402FR-076K81L	6.81k	Thick film resistor, SMD 0402, 1/16W, 1%
1	R505	Yageo	RC0402FR-072K7L	2.7k	Thick film resistor, SMD 0402, 1/16W, 1%
2	R601, R602	Yageo	RC0402FR-074K7L	4.7k	Thick film resistor, SMD 0402, 1/16W, 1%
6	R607, R614, R618, R619, R620, R621	Yageo	RC0402FR-07330RL	330R	Thick film resistor, SMD 0402, 1/16W, 1%
4	R610, R611, R612, R800	Yageo	RC0402JR-070RL	0R	Thick film resistor, SMD 0402, 1/16W, 1%, Thick film resistor, SMD 0402, 1/16W, 1%, Thick film resistor, SMD 0402, 1/16W, 1%, RES 0.0 OHM 1/16W 0402 SMD
1	R700	Yageo	RC0402FR-0739RL	39R	Thick film resistor, SMD 0402, 1/16W, 1%
3	R709, R710, R711	Vishay	CRCW040290K9FKEDC	90.9k	RES SMD 90.9K 1% 1/16W 0402
3	SW301, SW500, SW700	Dailywell Electronics Co.LTD	TS604VM1-035CR-R	TS604VM1-035CR	SWITCH, SMD, 260gf, 6.4mm X 6.2mm
2	U100, U101	Microchip	MIC5528-3.3YMT-T5	MIC5528-3.3YMT	LDO 3.3V 0.5A 6TDFN
1	U300	Microchip	PIC32CM1216MC00048-I/Y8X	PIC32CM1216MC00048-I/Y8X	PIC32CM 5V MC 128kB Flash 16kB SRAM 48TQFP 7Lx7Wx1H
1	U400	ATMEL	AT32UC3A4256J-C1UR	AT32UC3A4256J-C1UR	AVR 32-bit RISC MCU
1	U501	Microchip	ATA663211-GBQW	ATA663211-GBQW	LIN Transceiver
1	U600	Fairchild	FXMA2102L8X	FXMA2102L8X	Dual supply, 2-bit, voltage translator, buffer, repeater, isolator for I2C applications
12	U601, U602, U603, U604, U605, U606, U607, U608, U609, U610, U611, U612	Texas Instruments	SN74LVC1T45DCKR	SN74LVC1T45DCKR	Single-Bit Dual-Supply Bus Transceiver with Configurable Voltage Translation and 3-State Outputs
1	Y300	Microchip	DSC6011JI1A-012.0000	DSC6011JI1A 12 MHz	Standard Clock 2520 pkg MEMS OSCILLATOR, 25PPM 024.0000MHz
1	Y301	Microchip	DSC6083CE2A-032K768	OSCILLATOR 32.768KHz DSC60xxL3.2xW2.5H0.90	OSCILLATOR 32.768KHz 1.71-3.3V DSC60xxL3.2xW2.5H0.9
1	Y400	Fox Electronics	FQ5032B-12-C-C-C-200-1	12.0MHz	Fox FQ5032B 12.0MHz SMD crystal 738B-12

6. Revision History

Revision A - November 2020
This is the initial release of this document.

The Microchip Website

Microchip provides online support via our website at www.microchip.com/. This website is used to make files and information easily available to customers. Some of the content available includes:

- **Product Support** – Data sheets and errata, application notes and sample programs, design resources, user's guides and hardware support documents, latest software releases and archived software
- **General Technical Support** – Frequently Asked Questions (FAQs), technical support requests, online discussion groups, Microchip design partner program member listing
- **Business of Microchip** – Product selector and ordering guides, latest Microchip press releases, listing of seminars and events, listings of Microchip sales offices, distributors and factory representatives

Product Change Notification Service

Microchip's product change notification service helps keep customers current on Microchip products. Subscribers will receive email notification whenever there are changes, updates, revisions or errata related to a specified product family or development tool of interest.

To register, go to www.microchip.com/pcn and follow the registration instructions.

Customer Support

Users of Microchip products can receive assistance through several channels:

- Distributor or Representative
- Local Sales Office
- Embedded Solutions Engineer (ESE)
- Technical Support

Customers should contact their distributor, representative or ESE for support. Local sales offices are also available to help customers. A listing of sales offices and locations is included in this document.

Technical support is available through the website at: www.microchip.com/support

Microchip Devices Code Protection Feature

Note the following details of the code protection feature on Microchip devices:

- Microchip products meet the specification contained in their particular Microchip Data Sheet.
- Microchip believes that its family of products is one of the most secure families of its kind on the market today, when used in the intended manner and under normal conditions.
- There are dishonest and possibly illegal methods used to breach the code protection feature. All of these methods, to our knowledge, require using the Microchip products in a manner outside the operating specifications contained in Microchip's Data Sheets. Most likely, the person doing so is engaged in theft of intellectual property.
- Microchip is willing to work with the customer who is concerned about the integrity of their code.
- Neither Microchip nor any other semiconductor manufacturer can guarantee the security of their code. Code protection does not mean that we are guaranteeing the product as "unbreakable."

Code protection is constantly evolving. We at Microchip are committed to continuously improving the code protection features of our products. Attempts to break Microchip's code protection feature may be a violation of the Digital Millennium Copyright Act. If such acts allow unauthorized access to your software or other copyrighted work, you may have a right to sue for relief under that Act.

Legal Notice

Information contained in this publication regarding device applications and the like is provided only for your convenience and may be superseded by updates. It is your responsibility to ensure that your application meets with

your specifications. MICROCHIP MAKES NO REPRESENTATIONS OR WARRANTIES OF ANY KIND WHETHER EXPRESS OR IMPLIED, WRITTEN OR ORAL, STATUTORY OR OTHERWISE, RELATED TO THE INFORMATION, INCLUDING BUT NOT LIMITED TO ITS CONDITION, QUALITY, PERFORMANCE, MERCHANTABILITY OR FITNESS FOR PURPOSE. Microchip disclaims all liability arising from this information and its use. Use of Microchip devices in life support and/or safety applications is entirely at the buyer's risk, and the buyer agrees to defend, indemnify and hold harmless Microchip from any and all damages, claims, suits, or expenses resulting from such use. No licenses are conveyed, implicitly or otherwise, under any Microchip intellectual property rights unless otherwise stated.

Trademarks

The Microchip name and logo, the Microchip logo, Adaptec, AnyRate, AVR, AVR logo, AVR Freaks, BesTime, BitCloud, chipKIT, chipKIT logo, CryptoMemory, CryptoRF, dsPIC, FlashFlex, flexPWR, HELDO, IGLOO, JukeBlox, KeeLoq, Kleer, LANCheck, LinkMD, maXStylus, maXTouch, MediaLB, megaAVR, Microsemi, Microsemi logo, MOST, MOST logo, MPLAB, OptoLyzer, PackeTime, PIC, picoPower, PICSTART, PIC32 logo, PolarFire, Prochip Designer, QTouch, SAM-BA, SenGenuity, SpyNIC, SST, SST Logo, SuperFlash, Symmetricom, SyncServer, Tachyon, TempTrackr, TimeSource, tinyAVR, UNI/O, Vectron, and XMEGA are registered trademarks of Microchip Technology Incorporated in the U.S.A. and other countries.

APT, ClockWorks, The Embedded Control Solutions Company, EtherSynch, FlashTec, Hyper Speed Control, HyperLight Load, IntelliMOS, Libero, motorBench, mTouch, Powermite 3, Precision Edge, ProASIC, ProASIC Plus, ProASIC Plus logo, Quiet-Wire, SmartFusion, SyncWorld, Temux, TimeCesium, TimeHub, TimePictra, TimeProvider, Vite, WinPath, and ZL are registered trademarks of Microchip Technology Incorporated in the U.S.A.

Adjacent Key Suppression, AKS, Analog-for-the-Digital Age, Any Capacitor, AnyIn, AnyOut, BlueSky, BodyCom, CodeGuard, CryptoAuthentication, CryptoAutomotive, CryptoCompanion, CryptoController, dsPICDEM, dsPICDEM.net, Dynamic Average Matching, DAM, ECAN, EtherGREEN, In-Circuit Serial Programming, ICSP, INICnet, Inter-Chip Connectivity, JitterBlocker, KleerNet, KleerNet logo, memBrain, Mindi, MiWi, MPASM, MPF, MPLAB Certified logo, MPLIB, MPLINK, MultiTRAK, NetDetach, Omniscient Code Generation, PICDEM, PICDEM.net, PICkit, PICtail, PowerSmart, PureSilicon, QMatrix, REAL ICE, Ripple Blocker, SAM-ICE, Serial Quad I/O, SMART-I.S., SQI, SuperSwitcher, SuperSwitcher II, Total Endurance, TSHARC, USBCheck, VariSense, ViewSpan, WiperLock, Wireless DNA, and ZENA are trademarks of Microchip Technology Incorporated in the U.S.A. and other countries.

SQTP is a service mark of Microchip Technology Incorporated in the U.S.A.

The Adaptec logo, Frequency on Demand, Silicon Storage Technology, and Symmcom are registered trademarks of Microchip Technology Inc. in other countries.

GestIC is a registered trademark of Microchip Technology Germany II GmbH & Co. KG, a subsidiary of Microchip Technology Inc., in other countries.

All other trademarks mentioned herein are property of their respective companies.

© 2020, Microchip Technology Incorporated, Printed in the U.S.A., All Rights Reserved.

ISBN: 978-1-5224-7070-0

Quality Management System

For information regarding Microchip's Quality Management Systems, please visit www.microchip.com/quality.

Worldwide Sales and Service

AMERICAS	ASIA/PACIFIC	ASIA/PACIFIC	EUROPE
Corporate Office	**Australia - Sydney**	**India - Bangalore**	**Austria - Wels**
2355 West Chandler Blvd.	Tel: 61-2-9868-6733	Tel: 91-80-3090-4444	Tel: 43-7242-2244-39
Chandler, AZ 85224-6199	**China - Beijing**	**India - New Delhi**	Fax: 43-7242-2244-393
Tel: 480-792-7200	Tel: 86-10-8569-7000	Tel: 91-11-4160-8631	**Denmark - Copenhagen**
Fax: 480-792-7277	**China - Chengdu**	**India - Pune**	Tel: 45-4485-5910
Technical Support:	Tel: 86-28-8665-5511	Tel: 91-20-4121-0141	Fax: 45-4485-2829
www.microchip.com/support	**China - Chongqing**	**Japan - Osaka**	**Finland - Espoo**
Web Address:	Tel: 86-23-8980-9588	Tel: 81-6-6152-7160	Tel: 358-9-4520-820
www.microchip.com	**China - Dongguan**	**Japan - Tokyo**	**France - Paris**
Atlanta	Tel: 86-769-8702-9880	Tel: 81-3-6880- 3770	Tel: 33-1-69-53-63-20
Duluth, GA	**China - Guangzhou**	**Korea - Daegu**	Fax: 33-1-69-30-90-79
Tel: 678-957-9614	Tel: 86-20-8755-8029	Tel: 82-53-744-4301	**Germany - Garching**
Fax: 678-957-1455	**China - Hangzhou**	**Korea - Seoul**	Tel: 49-8931-9700
Austin, TX	Tel: 86-571-8792-8115	Tel: 82-2-554-7200	**Germany - Haan**
Tel: 512-257-3370	**China - Hong Kong SAR**	**Malaysia - Kuala Lumpur**	Tel: 49-2129-3766400
Boston	Tel: 852-2943-5100	Tel: 60-3-7651-7906	**Germany - Heilbronn**
Westborough, MA	**China - Nanjing**	**Malaysia - Penang**	Tel: 49-7131-72400
Tel: 774-760-0087	Tel: 86-25-8473-2460	Tel: 60-4-227-8870	**Germany - Karlsruhe**
Fax: 774-760-0088	**China - Qingdao**	**Philippines - Manila**	Tel: 49-721-625370
Chicago	Tel: 86-532-8502-7355	Tel: 63-2-634-9065	**Germany - Munich**
Itasca, IL	**China - Shanghai**	**Singapore**	Tel: 49-89-627-144-0
Tel: 630-285-0071	Tel: 86-21-3326-8000	Tel: 65-6334-8870	Fax: 49-89-627-144-44
Fax: 630-285-0075	**China - Shenyang**	**Taiwan - Hsin Chu**	**Germany - Rosenheim**
Dallas	Tel: 86-24-2334-2829	Tel: 886-3-577-8366	Tel: 49-8031-354-560
Addison, TX	**China - Shenzhen**	**Taiwan - Kaohsiung**	**Israel - Ra'anana**
Tel: 972-818-7423	Tel: 86-755-8864-2200	Tel: 886-7-213-7830	Tel: 972-9-744-7705
Fax: 972-818-2924	**China - Suzhou**	**Taiwan - Taipei**	**Italy - Milan**
Detroit	Tel: 86-186-6233-1526	Tel: 886-2-2508-8600	Tel: 39-0331-742611
Novi, MI	**China - Wuhan**	**Thailand - Bangkok**	Fax: 39-0331-466781
Tel: 248-848-4000	Tel: 86-27-5980-5300	Tel: 66-2-694-1351	**Italy - Padova**
Houston, TX	**China - Xian**	**Vietnam - Ho Chi Minh**	Tel: 39-049-7625286
Tel: 281-894-5983	Tel: 86-29-8833-7252	Tel: 84-28-5448-2100	**Netherlands - Drunen**
Indianapolis	**China - Xiamen**		Tel: 31-416-690399
Noblesville, IN	Tel: 86-592-2388138		Fax: 31-416-690340
Tel: 317-773-8323	**China - Zhuhai**		**Norway - Trondheim**
Fax: 317-773-5453	Tel: 86-756-3210040		Tel: 47-72884388
Tel: 317-536-2380			**Poland - Warsaw**
Los Angeles			Tel: 48-22-3325737
Mission Viejo, CA			**Romania - Bucharest**
Tel: 949-462-9523			Tel: 40-21-407-87-50
Fax: 949-462-9608			**Spain - Madrid**
Tel: 951-273-7800			Tel: 34-91-708-08-90
Raleigh, NC			Fax: 34-91-708-08-91
Tel: 919-844-7510			**Sweden - Gothenberg**
New York, NY			Tel: 46-31-704-60-40
Tel: 631-435-6000			**Sweden - Stockholm**
San Jose, CA			Tel: 46-8-5090-4654
Tel: 408-735-9110			**UK - Wokingham**
Tel: 408-436-4270			Tel: 44-118-921-5800
Canada - Toronto			Fax: 44-118-921-5820
Tel: 905-695-1980			
Fax: 905-695-2078			