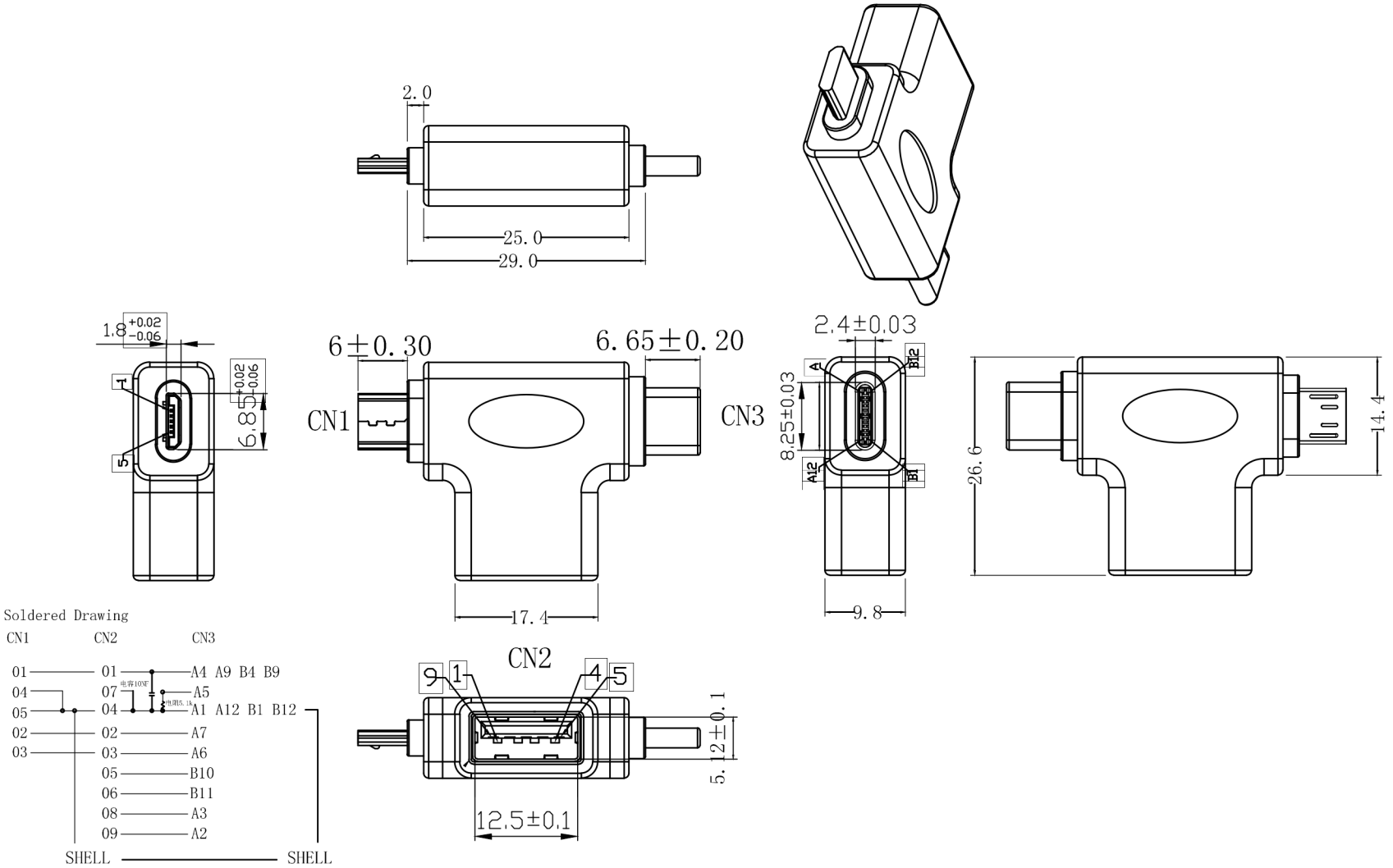

TOLERANCE	SIGNATURES		DATE
0 – 10 ±0.05 10 – 99 ±0.5 100 – 999 ±10.0 1000 – 9999 ±100.00 10000 – 99999 ±1000.00	DRAFT: WU JIA XIN		2020-9-9
	CHECKED:		
	APPROVAL:		
SHEET	SCALE	UNIT	REV
OF	1:1	mm	∅

REV	PART NO.& SAMPLE NO.	DATE	BY
A			
B			

TITLE: USB C Male to Micro Male+USB3.0 Female Adaptor

CUSTOMER: