Dual Stereo Sockets to Stereo Plug Adaptor

pro-SIGNAL

RoHS Compliant

Description

Dual Stereo jack sockets to stereo jack plug adaptor. Ideal for allowing two pairs of headphones to be used on one jack socket. White in colour.

Diagram

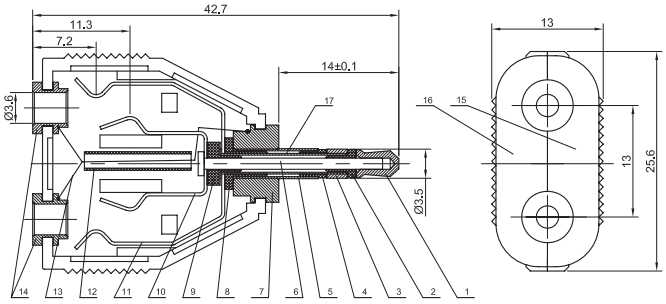

Item	Description	Qty.
1	Tip, brass, gold-plated	1 Pcs
2	Insulation I, ABS, black	
3	Ring, brass, gold-plated	
4	POF	
5	Insulation II, ABS, black	
6	Central axis, brass, nickel-plated	
7	3.5mm STP base, brass, gold-plated	
8	Insulation III, ABS, black	
9	Insulation IV, ABS, black	

Item	Description	Qty.
10	Long contact, phosphor bronze, gold-plated	1 Pcs
11	Short contact, phosphor bronze, gold-plated	
12	Tube, PVC	
13	Internal connection wire	
14	3.5mm ST J base, brass, gold-plated	
15	Top cover, ABS, white	
16	Bottom cover, ABS, white	
17	Central tube, brass, gold-plated	

Part Number Table

Description	Part Number
Dual Stereo Sockets to Stereo Plug Adaptor	PSG02898

Dimensions : Millimetres

Important Notice : This data sheet and its contents (the "Information") belong to the members of the AVNET group of companies (the "Group") or are licensed to it. No licence is granted for the use of it other than for information purposes in connection with the products to which it relates. No licence of any intellectual property rights is granted. The Information is subject to change without notice and replaces all data sheets previously supplied. The Information supplied is believed to be accurate but the Group assumes no responsibility for its accuracy or completeness, any error in or omission from it or for any use made of it. Users of this data sheet should check for themselves the Information and the suitability of the products for their purpose and not make any assumptions based on information included or omitted. Liability for loss or damage resulting from any reliance on the Information or use of it (including liability resulting from negligence or where the Group was aware of the possibility of such loss or damage arising) is excluded. This will not operate to limit or restrict the Group's liability for death or personal injury resulting from its negligence. pro-SIGNAL is the registered trademark of Premier Farnell Limited 2019.