Modular Adaptors
Feedthrough, Right Angle

multicomp PRO

RoHS Compliant

Features

- Fits standard rectangular cutout.
- Front or rear mounting through the panel.
- Various hole mounting options.
- No soldering or punch termination. Use standard cable for each connector style.
- Low rear profile.
- 90° or right angle rear cable entry.

Material

- RJ45 In-Line Coupler: ABS UL94-V2
- RJ45 In-Line Coupler Contact: Phosphor Bronze, gold plating.
- PCB: FR4
- Frame: Polyamide UL94-V2

Diagram

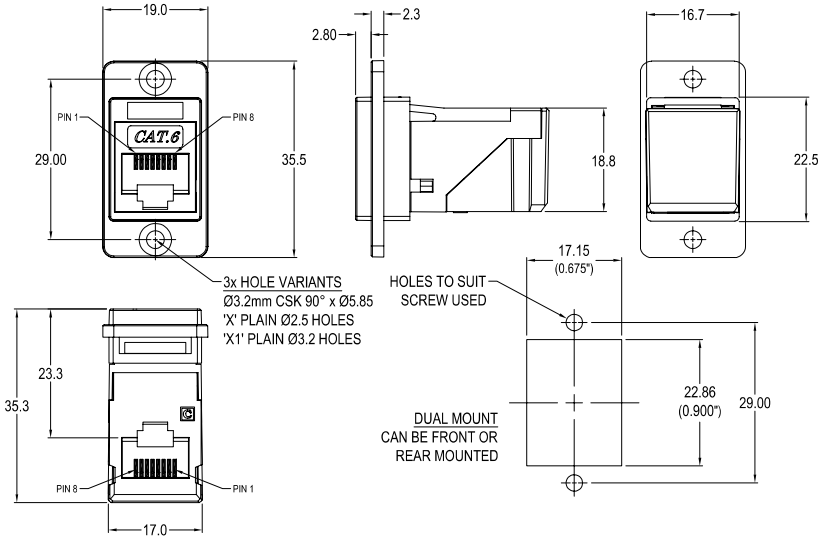

Performance:

- T568A & T568B wiring.
- Meet ISO/IEC 11801 and EN50173
- Meet ANSI/TIA/EIA 568B.2
- Rating: 125VAC RMS 1.5A
- Operating Temperatures: Min -10°C Max +60°C

Note: Functionality is affected by cable quality, length and cable wiring configuration.

Dimensions : Millimetres

Part Number Table

Description	Part Number
Modular Adaptors, Dualslim, Cat6, RJ45, Black Plastic Frame, CSK Holes	MP-CP30752

Important Notice : This data sheet and its contents (the "Information") belong to the members of the AVNET group of companies (the "Group") or are licensed to it. No licence is granted for the use of it other than for information purposes in connection with the products to which it relates. No licence of any intellectual property rights is granted. The Information is subject to change without notice and replaces all data sheets previously supplied. The Information supplied is believed to be accurate but the Group assumes no responsibility for its accuracy or completeness, any error in or omission from it or for any use made of it. Users of this data sheet should check for themselves the Information and the suitability of the products for their purpose and not make any assumptions based on information included or omitted. Liability for loss or damage resulting from any reliance on the Information or use of it (including liability resulting from negligence or where the Group was aware of the possibility of such loss or damage arising) is excluded. This will not operate to limit or restrict the Group's liability for death or personal injury resulting from its negligence. Multicomp Pro is the registered trademark of Premier Farnell Limited 2019.