Murata Power Solutions

NMXU Series

Isolated 5W Single & Dual Output DC/DC Converters

FEATURES

- RoHS compliant
- Single or dual output
- 1kVDC isolation
- Pin compatible with NMXSO series
- Power density 0.85W/cm^3
- UL 94V-0 package material
- Footprint 5.88cm^2
- Industry standard pinout
- 5V & 12V input
- 5V, 12V & 15V output
- No heatsink required
- Internal SMD construction
- Fully encapsulated with toroidal magnetics
- No external components required
- PCB mounting

DESCRIPTION

The NMXU series of DC/DC converters is particularly suited to isolating and/or converting DC power rails. The galvanic isolation allows the device to be configured to provide an isolated negative rail in systems where only positive rails exist. The devices are particularly suited for use in distributed power systems where there is low variation in the bus voltage levels.

SELECTION GUIDE

Order Code	Nominal Input Voltage	Output Voltage	Output Current	Efficiency (Typ.)	Isolation Capacitance (Typ.)	MTTF[1]
	V	V	A	%	pF	kHrs
NMXD0505UC	5	±5	±0.5	75	31.5	779
NMXD0512UC	5	±12	±0.208	75	33	158
NMXD0515UC	5	±15	±0.167	75	34.2	86
NMXD1205UC	12	±5	±0.5	75	34.7	233
NMXD1212UC	12	±12	±0.208	75	52.9	107
NMXD1215UC	12	±15	±0.167	75	59.9	68
NMXS0505UC	5	5	1.0	75	30.6	792
NMXS0512UC	5	12	0.417	75	31.2	158
NMXS0515UC	5	15	0.333	75	32.6	86
NMXS1205UC	12	5	1.0	75	32.5	233
NMXS1212UC	12	12	0.417	75	51.9	107
NMXS1215UC	12	15	0.333	75	54.1	68

When operated **with** additional external load capacitance the rise time of the input voltage will determine the maximum external capacitance value for guaranteed start up. The slower the rise time of the input voltage the greater the maximum value of the additional external capacitance for reliable start up.

INPUT CHARACTERISTICS

Parameter	Conditions	Min.	Typ.	Max.	Units
Voltage range	Continuous operation, 5V input types	4.5	5.0	5.5	V
	Continuous operation, 12V input types	10.8	12.0	13.2	
Reflected ripple voltage	BW=DC to 20MHz, all output types			200	mV

OUTPUT CHARACTERISTICS

Parameter	Conditions	Min.	Typ.	Max.	Units
Rated Power	T_A= 0°C to 70°C			5.0	W
Voltage Set Point Accuracy	See tolerance envelope				
Line regulation	High V_{IN} to low V_{IN}		1.1		%/%
Load Regulation	10% load to rated load, 5V output types		7	12	%
	10% load to rated load, 12V & 15V output types		5	7.5	
Ripple and Noise	BW=DC to 20MHz, all output types			125	mV p-p

ABSOLUTE MAXIMUM RATINGS

Short-circuit protection[2]	1 second
Lead temperature 1.5mm from case for 10 seconds	300°C
Input voltage V_{IN}, NMXU05 types	7V
Input voltage V_{IN}, NMXU12 types	15V

1. Calculated using MIL-HDBK-217F with nominal input voltage at full load.
2. Supply voltage must be disconnected at the end of the short circuit duration.

All specifications typical at T_A=25°C, nominal input voltage and rated output current unless otherwise specified.

RoHS COMPLIANT 2002/95/EC

25

For full details go to www.murata-ps.com/rohs

ISOLATION CHARACTERISTICS

Parameter	Conditions	Min.	Typ.	Max.	Units
Isolation test voltage	Flash tested for 1 second	1000			VDC
Resistance	Viso= 1000VDC	1			GΩ

GENERAL CHARACTERISTICS

Parameter	Conditions	Min.	Typ.	Max.	Units
Switching frequency	All input types		70		kHz

TEMPERATURE CHARACTERISTICS

Parameter	Conditions	Min.	Typ.	Max.	Units
Specification	All output types	0		70	°C
Storage		-55		100	
Case temperature rise above ambient	5V output types		30		
	All other output types		20		
Cooling	Free air convection				

TOLERANCE ENVELOPE

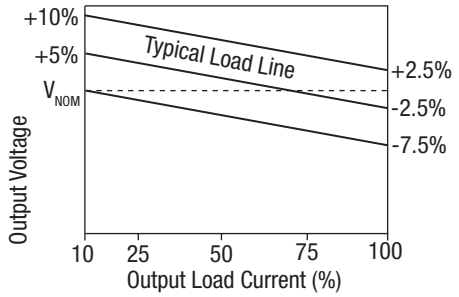

RoHS COMPLIANCE INFORMATION

RoHS COMPLIANT 2002/95/EC

This series is compatible with RoHS soldering systems with a peak wave solder temperature of 300ºC for 10 seconds. The pin termination finish on this product series is Matte Tin over Nickel Preplate. The series is backward compatible with Sn/Pb soldering systems.

For further information, please visit www.murata-ps.com/rohs

TECHNICAL NOTES

ISOLATION VOLTAGE

'Hi Pot Test', 'Flash Tested', 'Withstand Voltage', 'Proof Voltage', 'Dielectric Withstand Voltage' & 'Isolation Test Voltage' are all terms that relate to the same thing, a test voltage, applied for a specified time, across a component designed to provide electrical isolation, to verify the integrity of that isolation.

Murata Power Solutions NMXU series of DC/DC converters are all 100% production tested at their stated isolation voltage. This is 1kVDC for 1 second.

A question commonly asked is, "What is the continuous voltage that can be applied across the part in normal operation?"

For a part holding no specific agency approvals, such as the NMXU series, both input and output should normally be maintained within SELV limits i.e. less than 42.4V peak, or 60VDC. The isolation test voltage represents a measure of immunity to transient voltages and the part should never be used as an element of a safety isolation system. The part could be expected to function correctly with several hundred volts offset applied continuously across the isolation barrier; but then the circuitry on both sides of the barrier must be regarded as operating at an unsafe voltage and further isolation/insulation systems must form a barrier between these circuits and any user-accessible circuitry according to safety standard requirements.

REPEATED HIGH-VOLTAGE ISOLATION TESTING

It is well known that repeated high-voltage isolation testing of a barrier component can actually degrade isolation capability, to a lesser or greater degree depending on materials, construction and environment. The NMXU series has toroidal isolation transformers, with no additional insulation between primary and secondary windings of enameled wire. While parts can be expected to withstand several times the stated test voltage, the isolation capability does depend on the wire insulation. Any material, including this enamel (typically polyurethane) is susceptible to eventual chemical degradation when subject to very high applied voltages thus implying that the number of tests should be strictly limited. We therefore strongly advise against repeated high voltage isolation testing, but if it is absolutely required, that the voltage be reduced by 20% from specified test voltage.

This consideration equally applies to agency recognized parts rated for better than functional isolation where the wire enamel insulation is always supplemented by a further insulation system of physical spacing or barriers.

PACKAGE SPECIFICATIONS

MECHANICAL DIMENSIONS

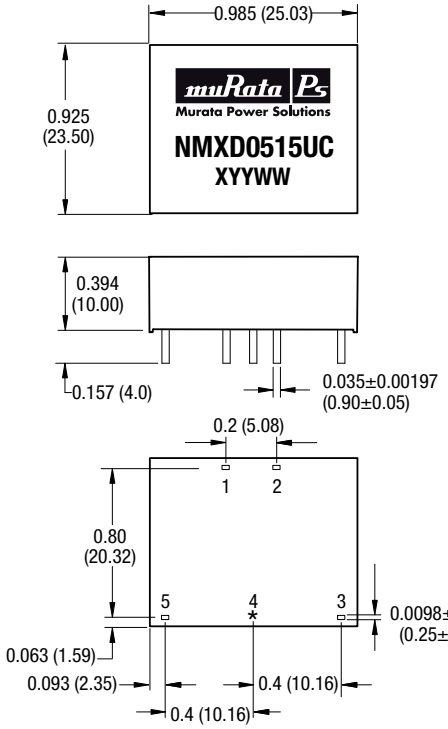

Weight: 10g

* Pin not fitted on single output variants.

All dimensions in inches ±0.01 (mm ±0.25mm). All pins on a 0.1 (2.54) pitch and within ±0.01 (0.25) of true position.

PIN CONNECTIONS

Single Output Variants	
Pin	Function
1	$-V_{IN}$
2	$+V_{IN}$
3	$+V_{OUT}$
4	Not fitted
5	$-V_{OUT}$

Dual Output Variants	
Pin	Function
1	V_{IN}
2	$+V_{IN}$
3	$+V_{OUT}$
4	Common
5	$-V_{OUT}$

RECOMMENDED FOOTPRINT DETAILS

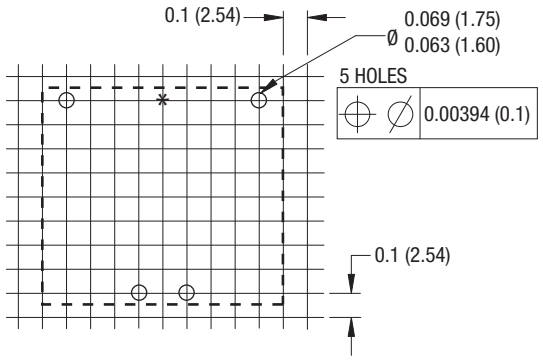

* Hole not required for single output variants

All dimensions in inches ±0.01 (mm ±0.25mm).

TUBE OUTLINE DIMENSIONS

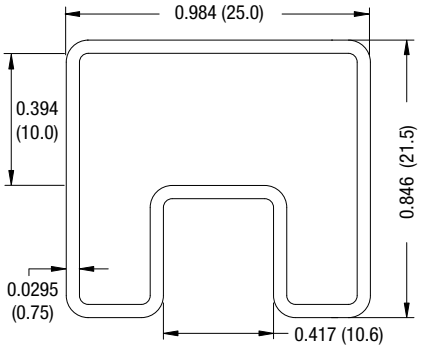

Not to scale.

All dimensions in inches ±0.01 (mm ±0.25mm).

Murata Power Solutions

Murata Power Solutions, Inc.
11 Cabot Boulevard, Mansfield, MA 02048-1151 U.S.A.
Tel: (508) 339-3000 (800) 233-2765 Fax: (508) 339-6356
www.murata-ps.com email: sales@murata-ps.com ISO 9001 & ISO 14001 REGISTERED

Murata Power Solutions, Inc. makes no representation that the use of its products in the circuits described herein, or the use of other technical information contained herein, will not infringe upon existing or future patent rights. The descriptions contained herein do not imply the granting of licenses to make, use, or sell equipment constructed in accordance therewith. Specifications are subject to change without notice.
© 2009 Murata Power Solutions, Inc.

USA: Mansfield (MA), Tel: (508) 339 3000, email: sales@murata-ps.com
Canada: Toronto, Tel: (866) 740 1232, email: toronto@murata-ps.com
UK: Milton Keynes, Tel: +44 (0)1908 615232, email: mk@murata-ps.com
France: Montigny Le Bretonneux, Tel: +33 (0)1 34 60 01 01, email: france@murata-ps.com
Germany: München, Tel: +49 (0)89-544334-0, email: ped.munich@murata-ps.com
Japan: Tokyo, Tel: 3-3779-1031, email: japan@murata-ps.com
Kyoto, Tel: 81-75-955-7269, email: japan@murata-ps.com
China: Shanghai, Tel: +86 215 027 3678, email: shanghai@murata-ps.com
Guangzhou, Tel: +86 208 221 8066, email: guangzhou@murata-ps.com
Singapore: Parkway Centre, Tel: +65 6348 9096, email: singapore@murata-ps.com