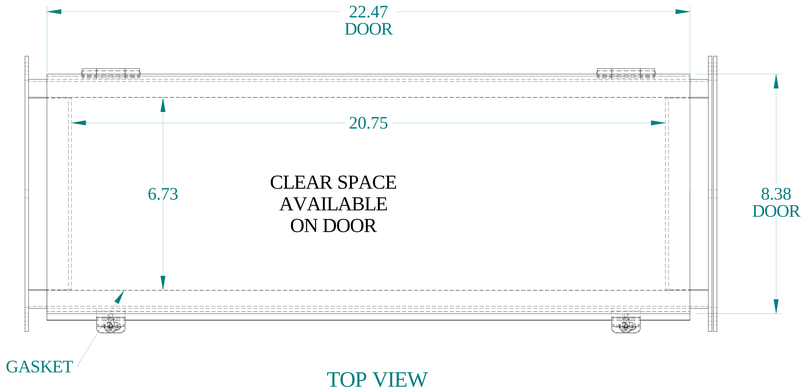

TOP VIEW

BACK VIEW

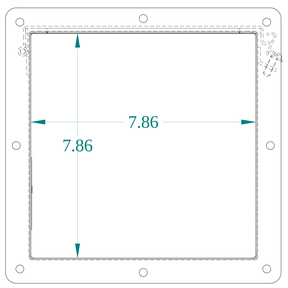

SIDE VIEW

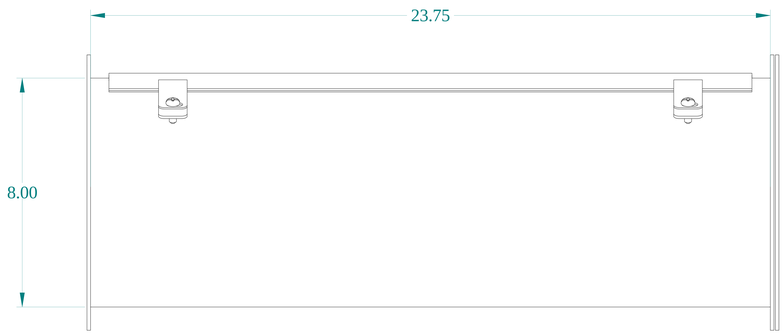

FRONT VIEW

BOTTOM VIEW

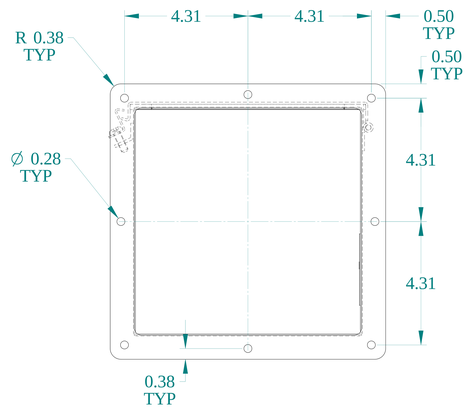

SIDE VIEW

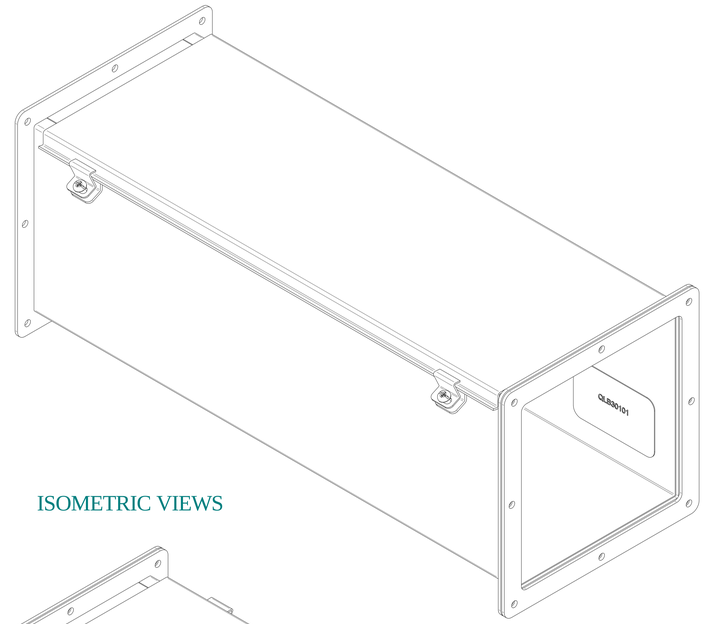

ISOMETRIC VIEWS

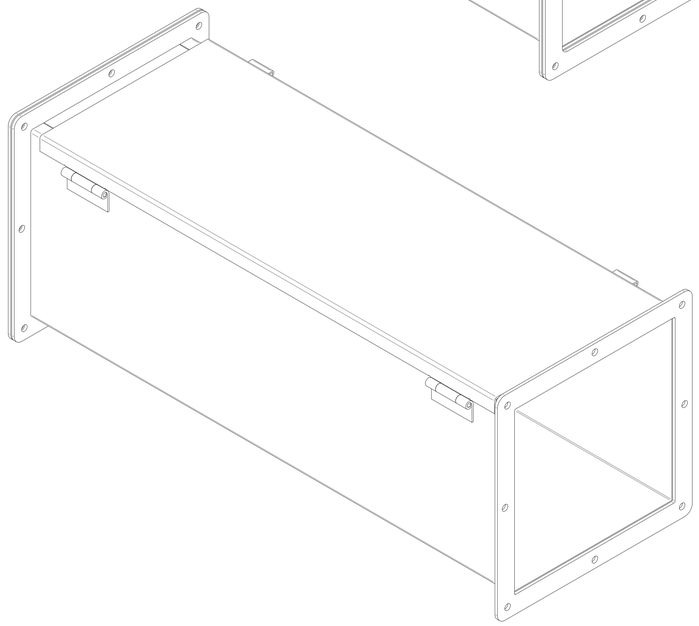

HAMMOND MANUFACTURING®

www.hammondmfg.com

Data subject to change without notice.

Part # : 1487E24SS	Date : Mar. 13, 2023

Link:www.hammfg.com/1487E24SS