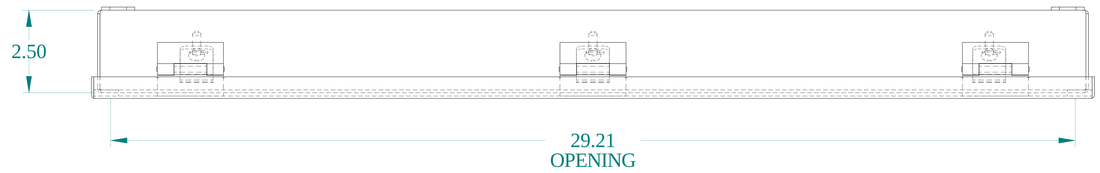

TOP VIEW

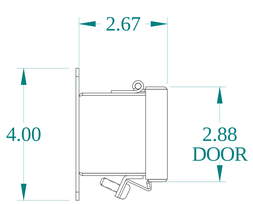

SIDE VIEW

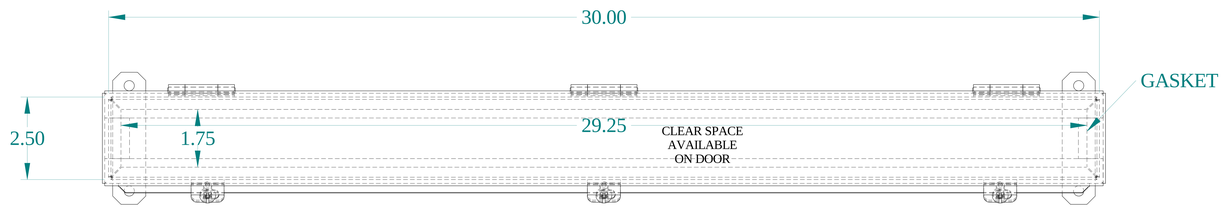

FRONT VIEW

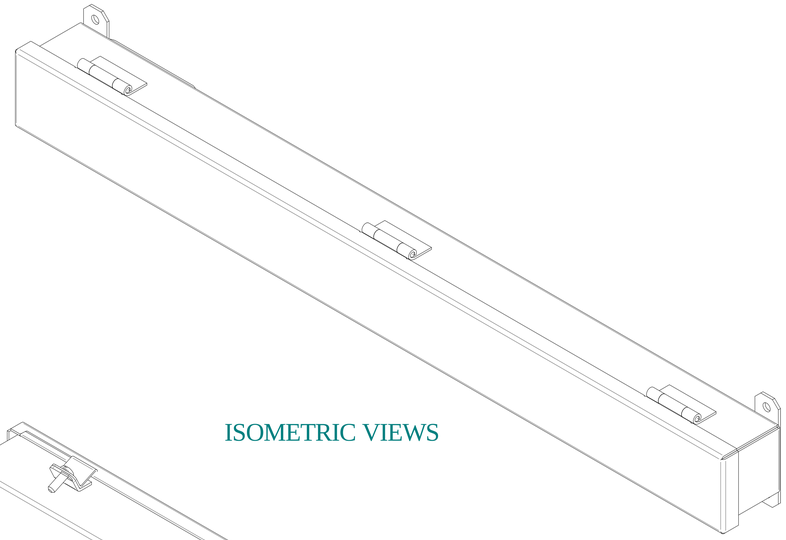

ISOMETRIC VIEWS

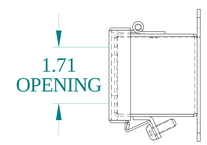

SIDE VIEW

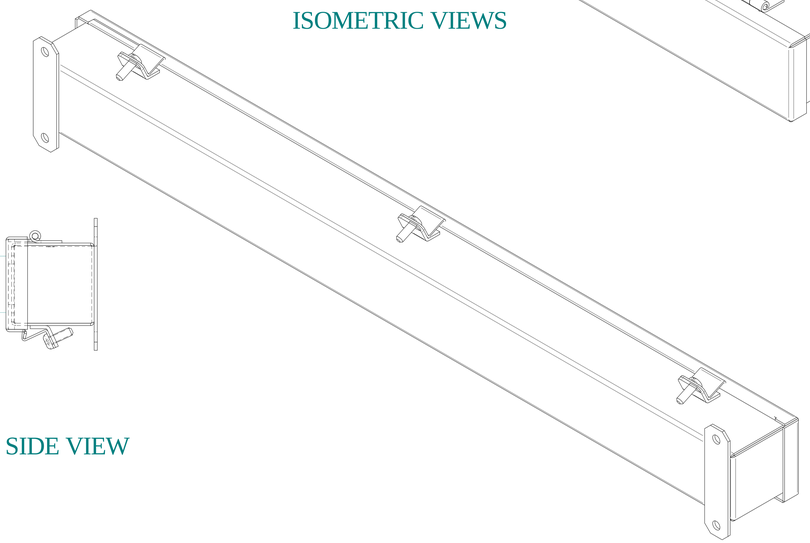

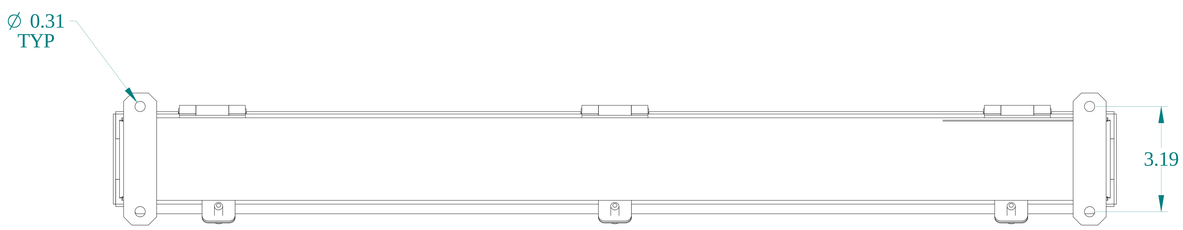

BACK VIEW

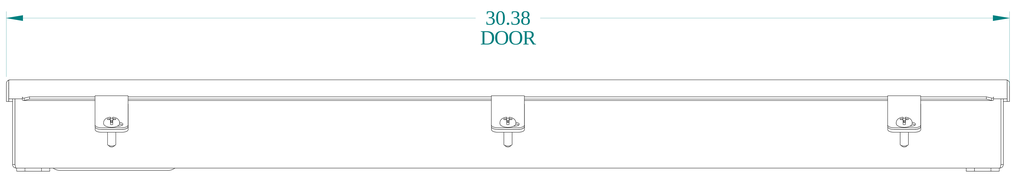

BOTTOM VIEW

HAMMOND MANUFACTURING®

www.hammondmfg.com

Data subject to change without notice.

Part # : 1486B30SS	Date : Aug. 25, 2021

Link:www.hammfg.com/1486B30SS