IRC40

Proximity inductive sensors with rectangular housing and 5 positions rotatable head

Benefits

- Sensing face mountable in 5 different positions
- Easily adaptable to several application needs
- Four corner LEDs to ensure visibility of the switching status and operation from any direction
- Flush or non-flush mountable
- Extended sensing ranges: 22mm (flush), 40mm (Non-flush)
- IP69K protection degree for a certified resistance to frequent high temperature and high pressure washing cycles
- Antivalent output (NO+NC), NPN or PNP
- Easy mounting system (included) for quick installation or replacement of the sensor
- Wide operating temperature range from -25°C to +80°C

Description

Inductive proximity sensors with 40 mm x 40 mm rectangular housings for use in harsh ambient conditions to detect metal objects without contact and wear-free.
The sensors generate an electromagnetic field which interacts with the detected object and are characterized by a long service life and extreme ruggedness.
The long sensing distance of up to 40 mm makes them particularly suitable also for use in conveyor systems, assuring a stable and reliable detection even in harsh environments, also thanks to the integrated advanced electronics which ensures optimal performance with temperature variations.

Applications

- Non contact detection of metal objects in general position-sensing and presence-sensing in industrial applications
- Conveyor systems, material handling and logistic, agriculture, escalators

Main functions

- Easy and quick mounting or replacement without the need of additional tools thanks to the plug-and-play mounting system
- Rotating sensor head in 5 different positions allows maximum flexibility in all applications
- Reliable and accurate detection in the whole extended temperature range, thanks to the integrated advanced microprocessor based electronics
- Safer installation thanks to the long sensing range up to 40 mm
- Reliable switching performance even in harsh environments with low and high temperature, and enclosure rating IP68 and IP69K
- Sensor switching and operating status can be clearly seen from any directions thanks to the 4 corner LEDs
- Integrated diagnostic functions with flashing LEDs in the event of short-circuit or overload

References

Order code

IRC40S □ M1 □

Enter the code option instead of □

Code	Option	Description
I	-	Inductive sensor
R	-	Rectangular housing
C	-	Plastic housing
40S	-	40x40 mm
□	F22	Flush; Sensing distance: 22mm
	N40	Non-flush; Sensing distance: 40mm
M1	-	M12 plug
□	NA	NPN, 1NO+1NC output
	PA	PNP, 1NO+1NC output

Additional characters can be used for customized versions.

Selection guide

Detection principle	Rated operating distance Sn	Output type	Ordering no.
Flush	22 mm	NPN, 1NO + 1NC	**IRC40SF22M1NA**
		PNP, 1NO + 1NC	**IRC40SF22M1PA**
Non-flush	40 mm	NPN, 1NO + 1NC	**IRC40SN40M1NA**
		PNP, 1NO + 1NC	**IRC40SN40M1PA**

Structure

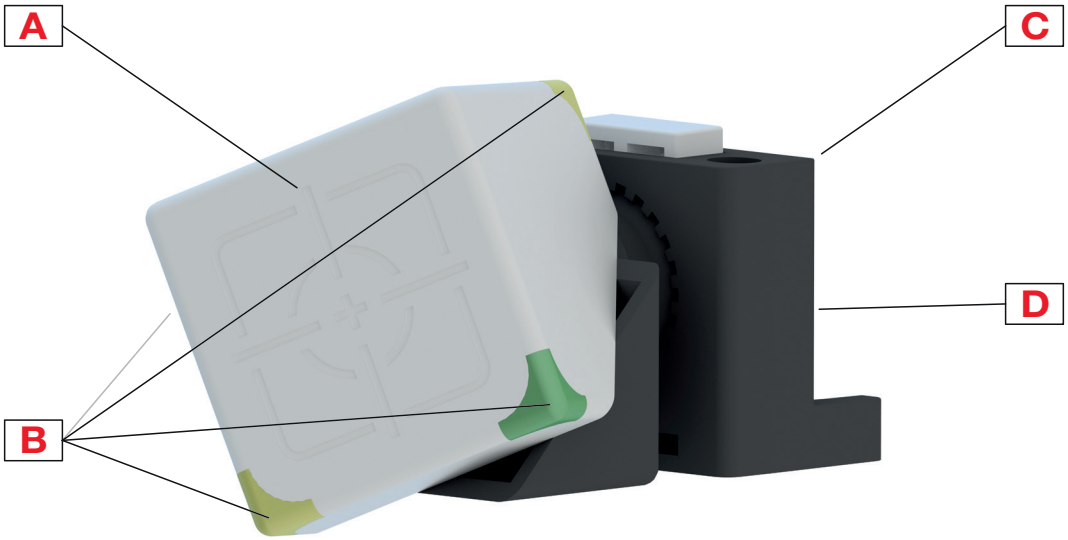

Element	Component	Function
A	Sensing face	Flush or non-flush with rotatable head
B	LED	4 corner, Green and Yellow LED: Output flashing: short circuit or overload indication
C	Mounting bracket	Push-lock mounting system
D	Connector	M12 x 1, 4 pin, male connector

Sensing

Detection

Rated operating distance S_n	22 to 40 mm: depending on version (flush or non-flush)
Reference target	The operating distance is measured according to IEC 60947-5-2, using a standard target moving axially. This target is square shape 1 mm thickness, made of steel e.g. type Fe 360 as defined in ISO 630 and it shall be of the rolled finish. The length of the side of the square is equal to – the diameter of the circle inscribed on the active surface of the sensing face, or – three times the rated operating distance S_n whichever is greater
Assured operating sensing distance (S_a)	$0 \le S_a \le 0.81 \times S_n$ (e.g. with S_n of 40 mm, S_a is 0 ... 32.4 mm)
Effective operating distance (S_r)	$0.9 \times S_n \le S_r \le 1.1 \times S_n$
Usable operating distance (S_u)	$0.9 \times S_r \le S_u \le 1.1 \times S_r$
Hysteresis (H)	1...20%

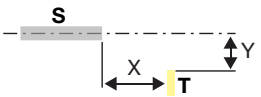

S: sensor
T: target

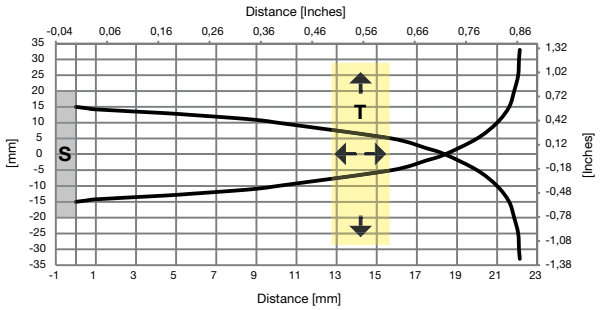

Fig. 1 *Flush*

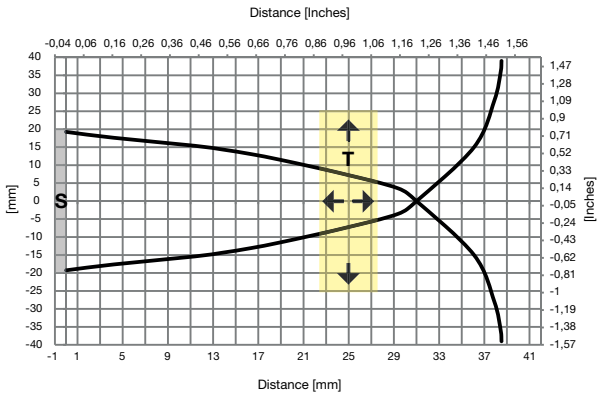

Fig. 2 *Non-flush*

Correction factors

The specific operating distance S_n refers to defined measuring conditions. The following data have to be considered as general guidelines.

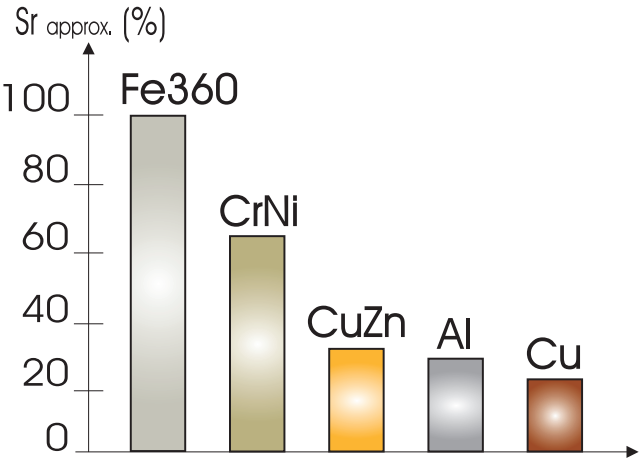

Fig. 3 *Flush*

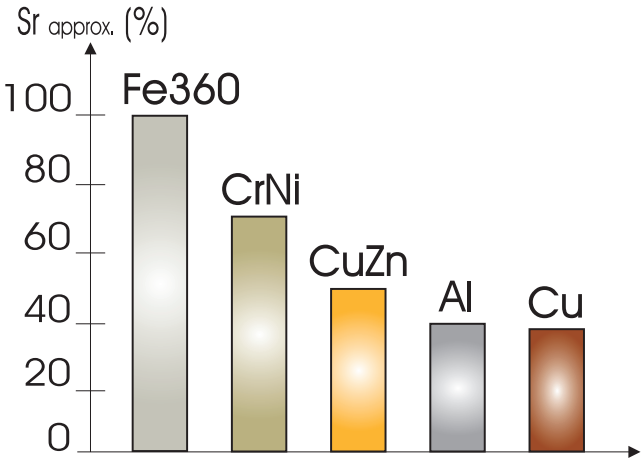

Fig. 4 *Non-flush*

Fe360: Steel; **CrNi:** Chrome-nickel; **CuZn:** Brass; **Al:** Aluminium; **Cu:** Copper; **Sr:** Effective operating distance.

The rated operating distance is reduced by the use of metals and alloys other than Fe360. The most important reduction factors for inductive proximity sensors are shown in the figure.

Accuracy

Repeatability (R)	≤ 5%

Features

Power Supply

Rated operational voltage (U_b)	10 to 30 VDC (ripple included)
Ripple (U_{rpp})	≤ 10%
No load supply current (I_o)	≤ 20 mA
Power ON delay (t_v)	≤ 50 ms

Outputs

Output functions	NPN or PNP by sensor type open collector
Output configuration	N.O. and N.C.
Output current (I_e)	≤ 200 mA
OFF-state current (I_r)	≤ 100 µA
Voltage drop (U_d)	Max. 2.5 VDC @ 200 mA
Protection	Short-circuit, reverse polarity and overload
Voltage transient	1 kV/0.5 J

Response times

Operating frequency (f)	≤ 200 Hz

Indication

Green LED	Yellow LED	Output	Description
ON	OFF	OFF	Target not present
ON	ON	ON	Target present
-	Blinking	f: 2Hz	Short-circuit or overload

Environmental

Ambient temperature	Operating: -25° to +80°C (-13° to +176°F)	
	Storage: -25° to +80°C (-13° to +176°F)	
Ambient humidity	Operating: 35% to 95%	
	Storage: 35% to 95%	
Vibration	10 to 55 Hz, amplitude 1.0 mm; sweep cycle 5 min; in X, Y and Z direction	EN 60068-2-6
Shock	30 G /11 ms. 10 shocks in X, Y and Z direction	EN 60068-2-27
Rough handling shocks	2 times from 1m, 100 times from 0.5m	EN 60068-2-31
Degree of protection	IP67, IP68 (1m submersion for 24h), IP69K	IEC 60529; EN 60947-1

Compatibility and conformity

EMC protection	EN 61000-4-2 Electrostatic discharge (ESD)	8 kV air discharge 4 kV contact discharge
	EN 61000-4-3 Radiated radiofrequency	3 V/m
	EN 61000-4-4 Burst immunity	4 kV
	EN 61000-4-6 Conducted radio frequency	3 V
	EN 61000-4-8 Power frequency magnetic fields	30 A/m
$MTTF_d$	1900 years @50°C (122°F)	
Approvals		
	CCC is not required for products rated ≤ 36 V	

Mechanical data

Weight max. (including mounting bracket)	Flush: 116 g; Non-flush: 128 g
Mounting	Flush or non flush mountable
Material	PBT, Glass fibres. UL94 V-0 classified, with brominated flame retardants, PBB/PBDE free.
Max tightening torque	M12 connector: 3 Nm; Mounting bracket: 1 Nm
Max head rotation torque	1.2 Nm

Electrical connection

Plug	M12 x 1, 4 pin, male connector

Connection Diagrams

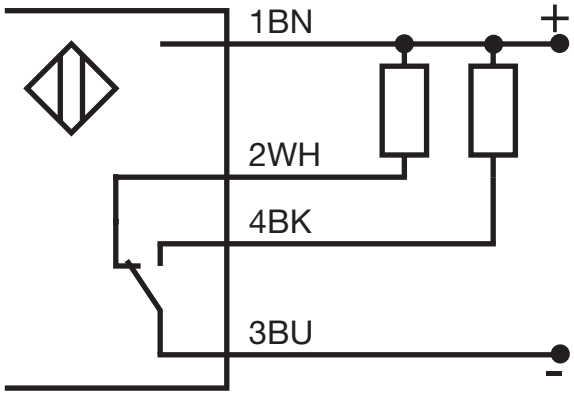

Fig. 5 *NPN*

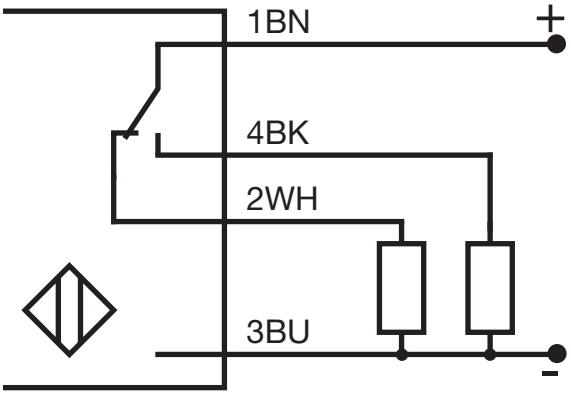

Fig. 6 *PNP*

Colour code							
BN	Brown	WH	White	BK	Black	BU	Blue

Wire colors in accordance with EN 60947-5-2

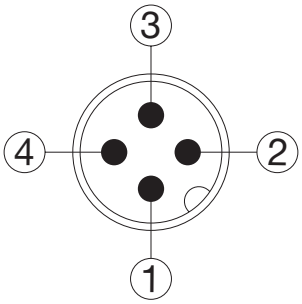

Fig. 7 *Plug*

Dimensions [mm]

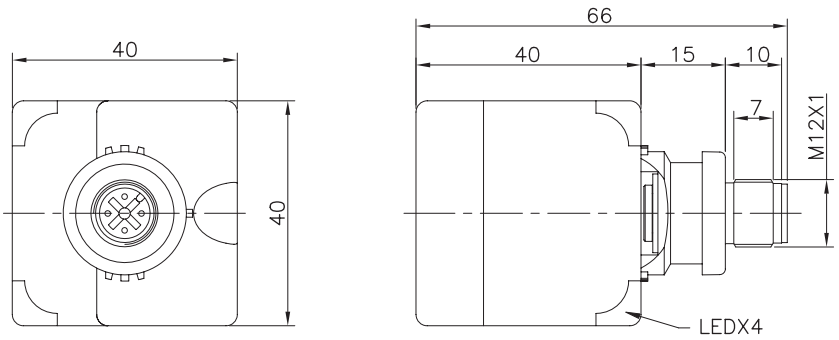

Fig. 8 *Sensor dimensions*

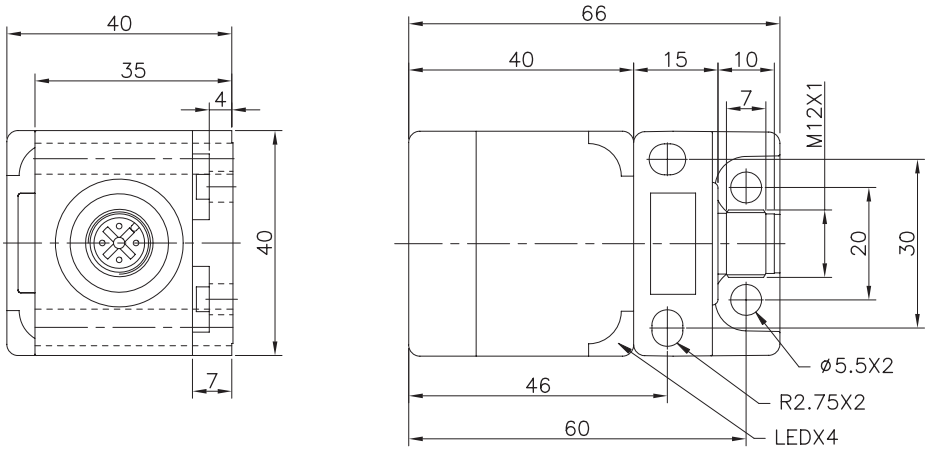

Fig. 9 *Sensor dimensions with bracket*

Installation

Flush

Flush sensor, when installed in damping material

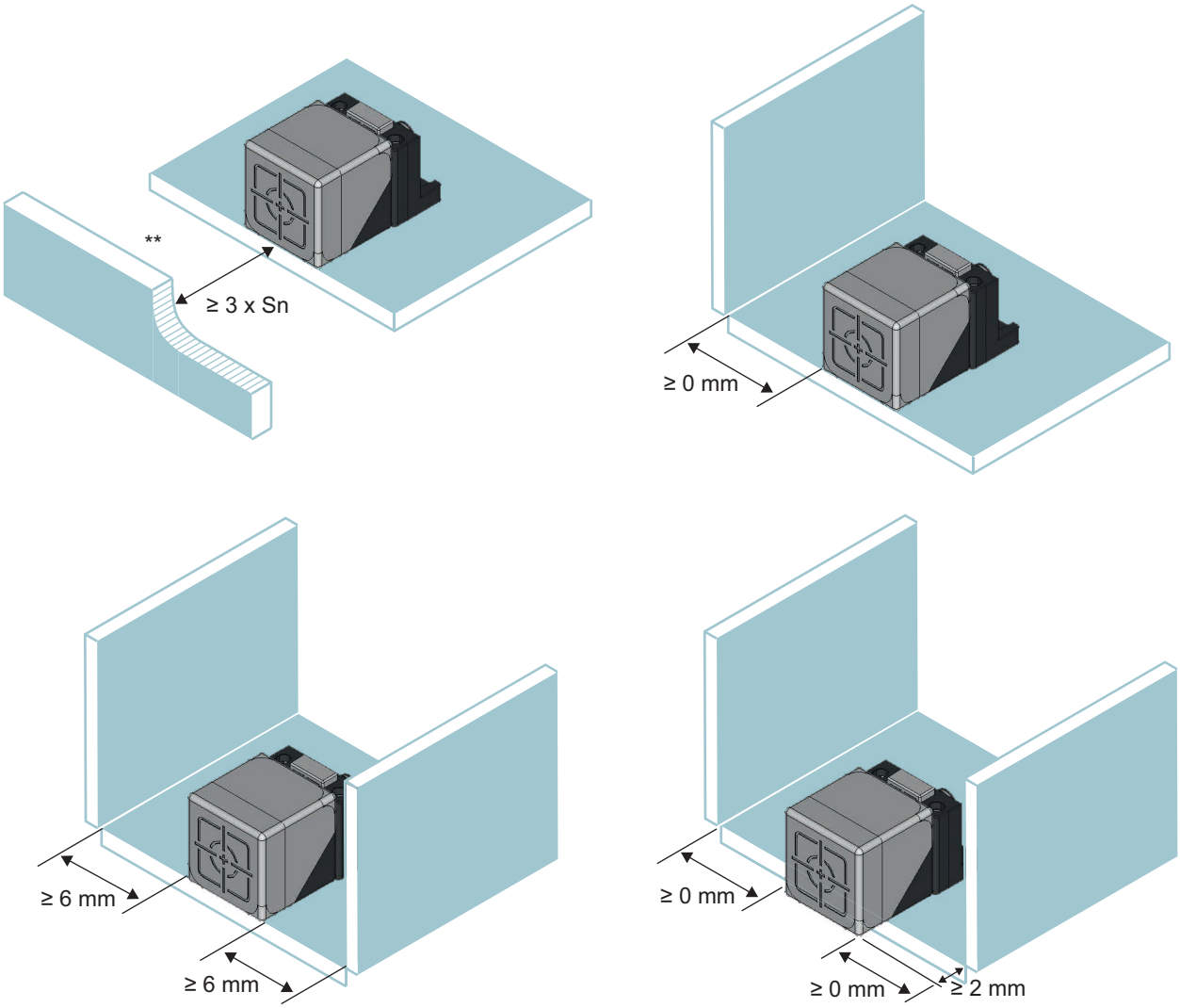

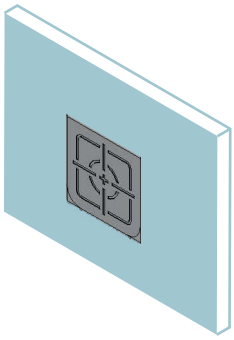

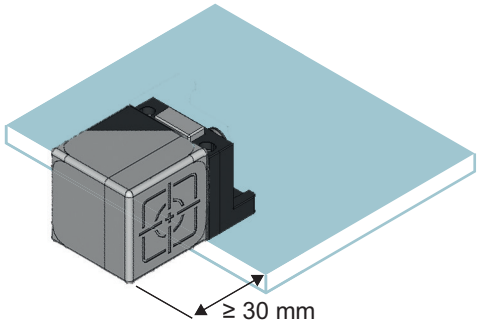
≥ 30 mm

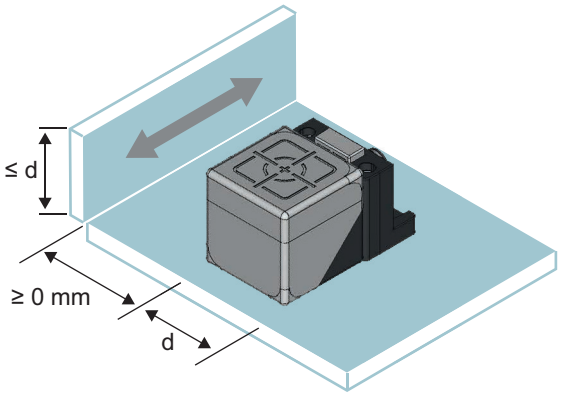
≤ d
≥ 0 mm
d

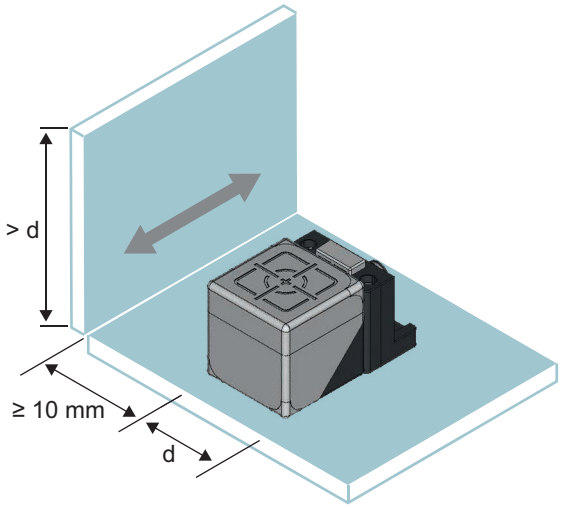
> d
≥ 10 mm
d

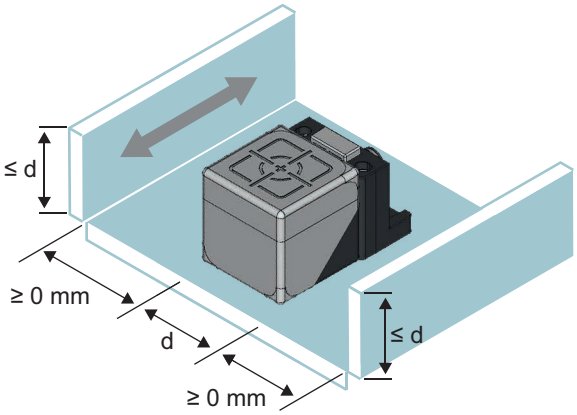
≤ d
≥ 0 mm
d
≥ 0 mm
≤ d

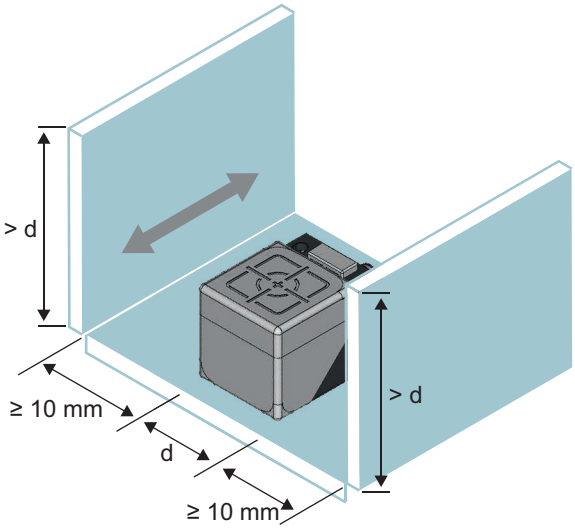
> d
≥ 10 mm
d
≥ 10 mm
> d

Flush sensors, when installed together in damping material

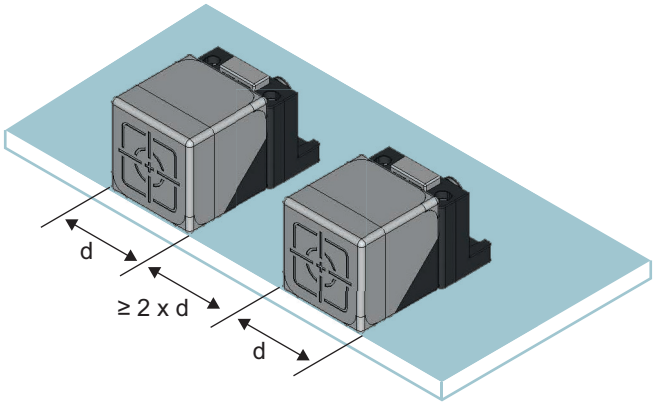

Non-flush

Non-flush sensor, when installed in damping material

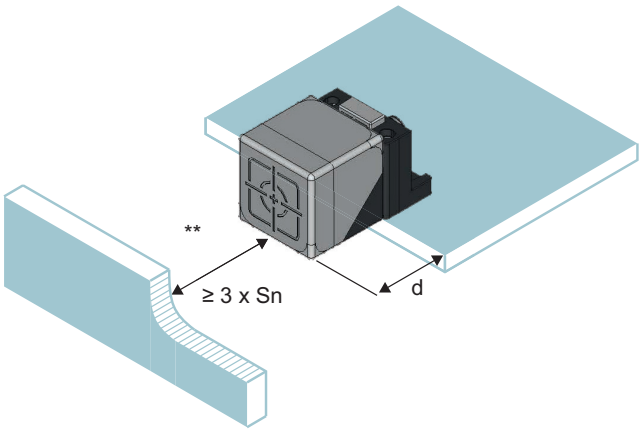

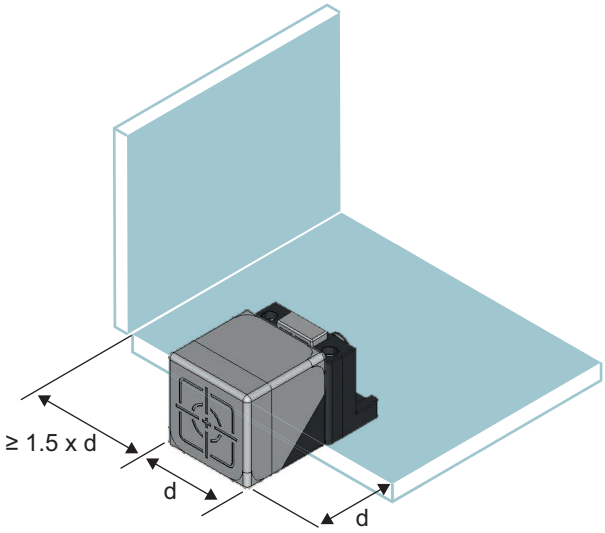

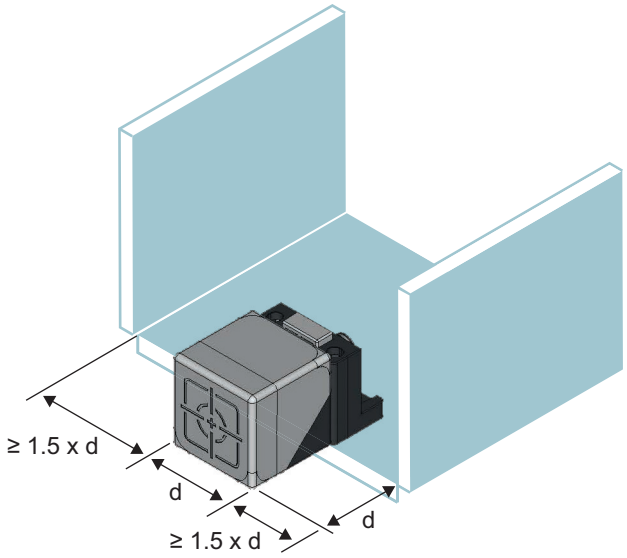
≥ 1.5 x d
d
≥ 1.5 x d
d

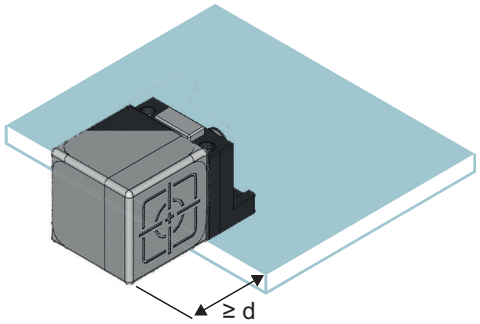
≥ d

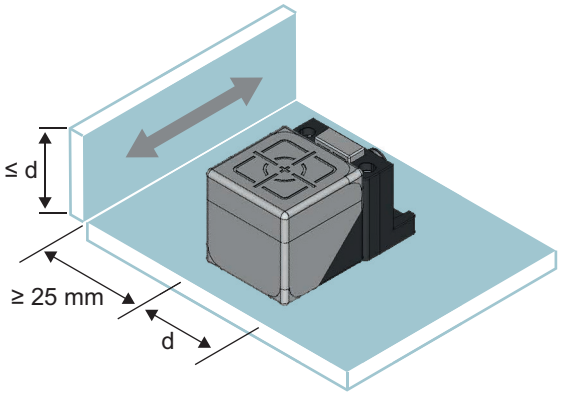
≤ d
≥ 25 mm
d

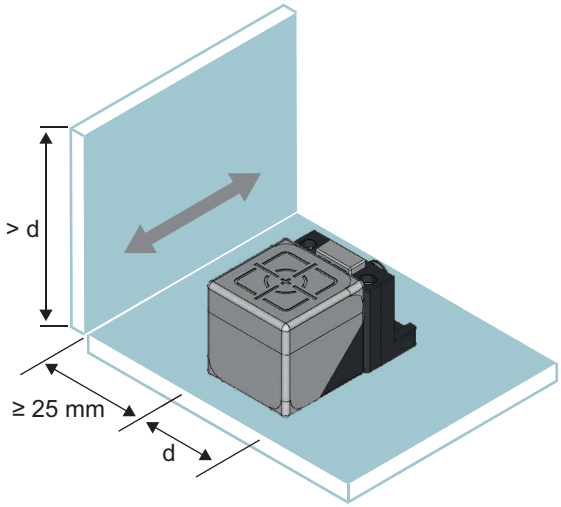
> d
≥ 25 mm
d

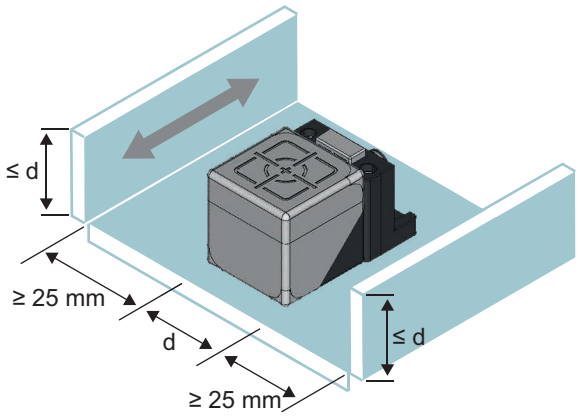
≤ d
≥ 25 mm
d
≥ 25 mm
≤ d

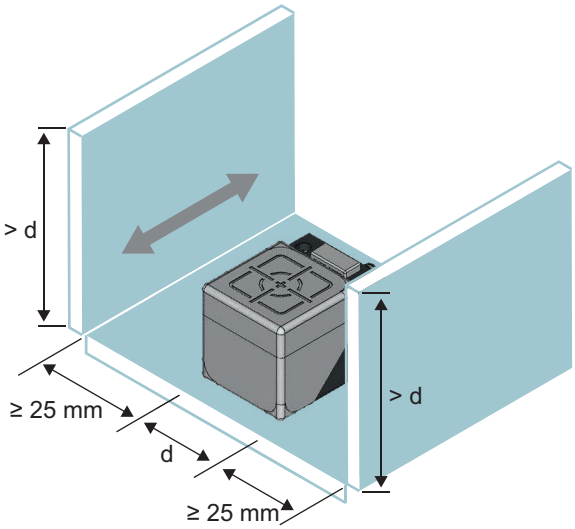
> d
≥ 25 mm
d
≥ 25 mm
> d

Non-flush sensors, when installed together in damping material

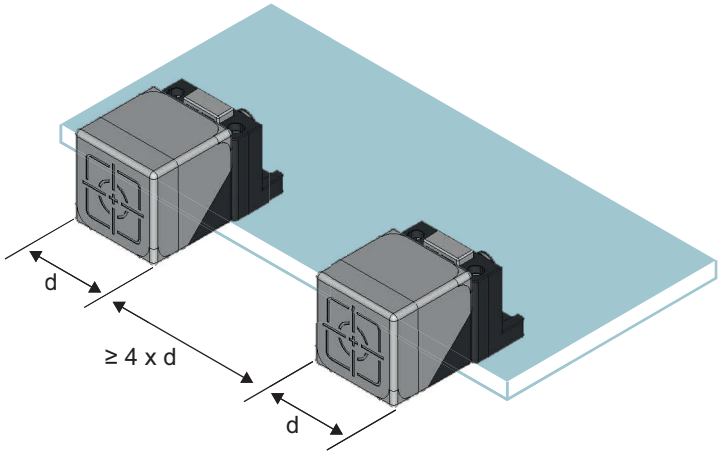

Sensors installed opposite each other

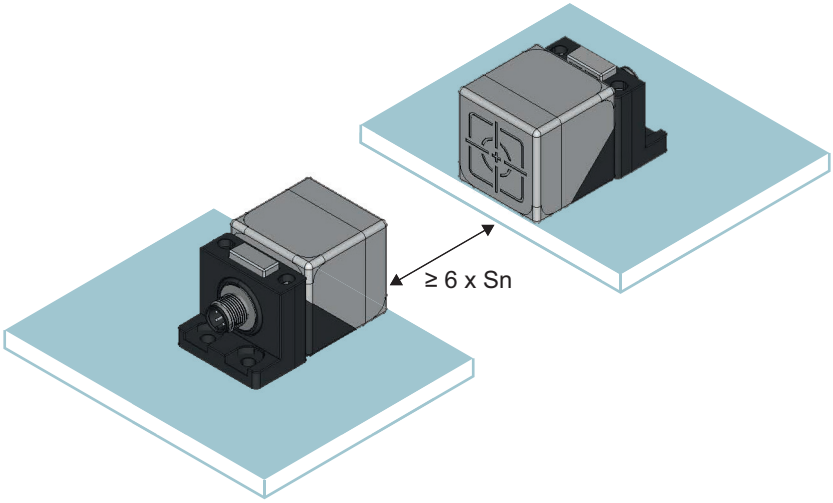

Fig. 10 *For sensors installed opposite each other, a minimum space of 6 x Sn (the nominal sensing distance) must be observed*

** Free zone or non-damping material

S_n: nominal sensing distance
d: 40 mm

Rotatable head

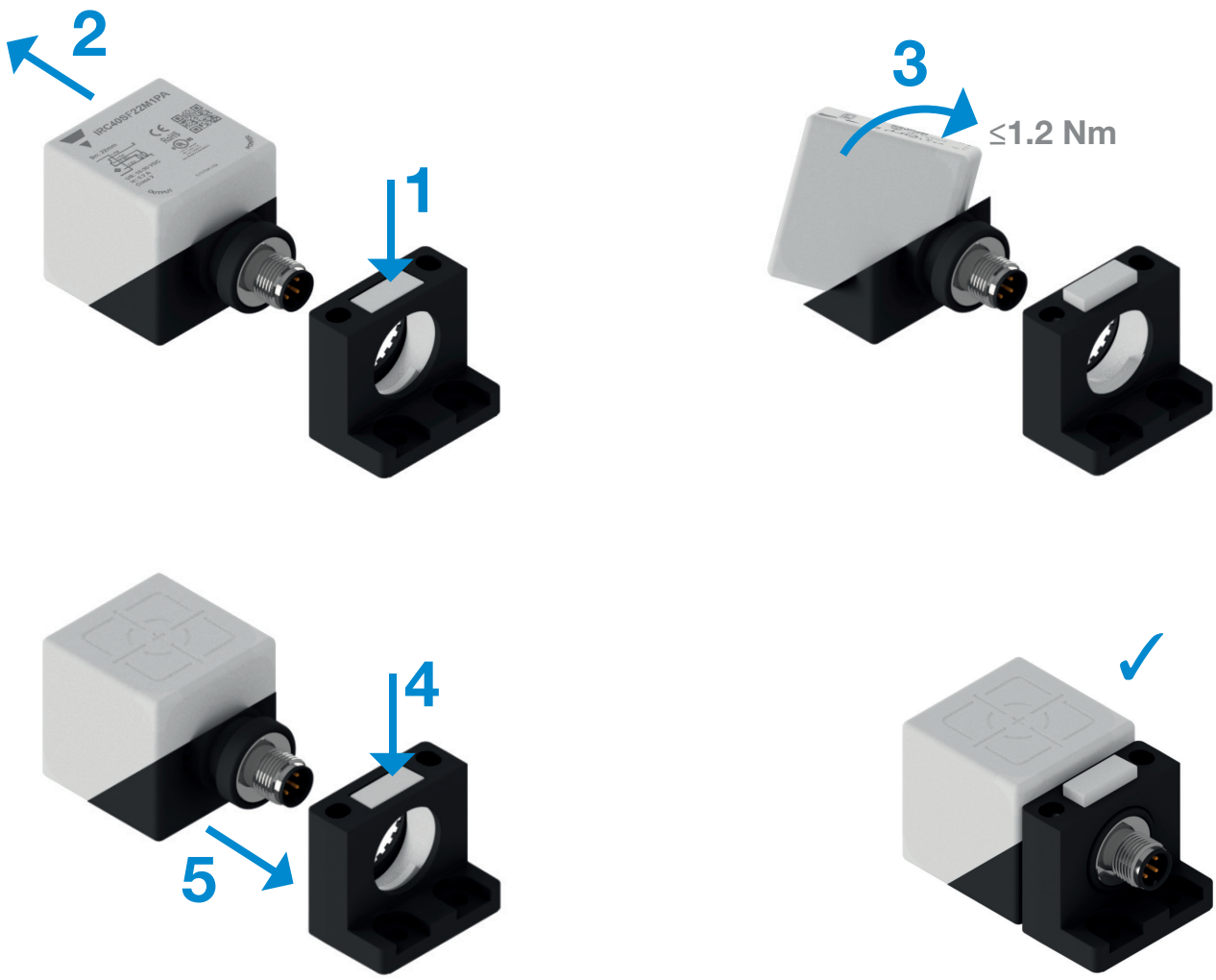

Delivery contents and compatible components

Delivery contents

- Inductive proximity switch
- Mounting braket

CARLO GAVAZZI compatible components

- Connector type: CONx... series to be purchased separately