Part Number	Colour	Size	A	B	C
RP0000380862	BLACK	M4	6.9	9.0	8.3
RP0000380863	WHITE				
RP0000380858	BLACK	M5	7.9	10.9	9.5
RP0000380894	WHITE				
RP0000380897	BLACK	M6	9.8	12.9	13.0
RP0000380900	WHITE				
RP0000380903	BLACK	M8	12.8	16.8	15.0
RP0000380944	BLACK	M10	16.7	21.3	19.5

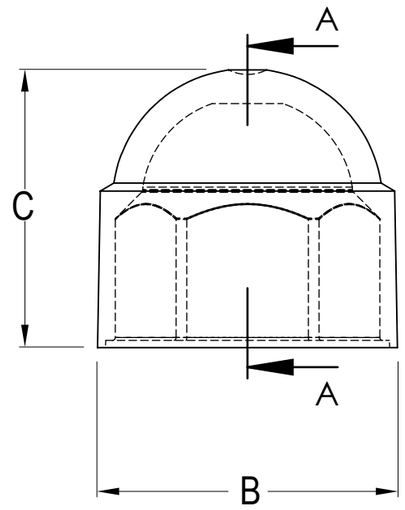

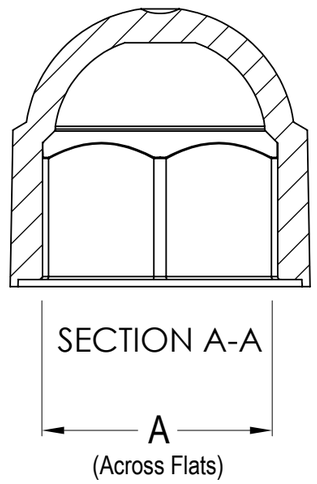

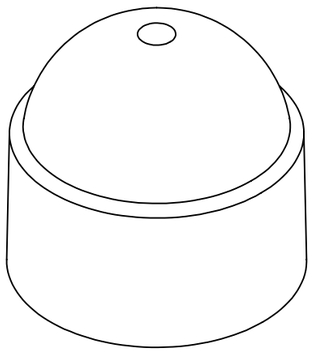

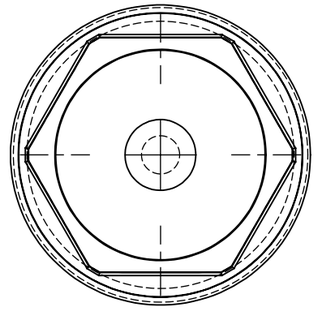

REVISION	
A	INITIAL DRAWING 02.02.2024

NOTES: DO NOT SCALE DRAWING

FITS SCREWS AND NUTS

UNLESS OTHERWISE SPECIFIED:
DIMENSIONS ARE IN MM (MILLIMETERS).

	NAME	DATE
DRAWN	Andrew Fletcher	02.02.24
CHK'D		
APPV'D		

MATERIAL: LDPE

HEAT TREATMENT: N/A

TITLE: Hexagon Screw/Nut Cover

DESIGN RIGHT. TR FASTENINGS LTD, 2024
UNDER NO CIRCUMSTANCES MUST THIS DRAWING BE COPIED OR DISCLOSED WITHOUT FIRST OBTAINING WRITTEN AUTHORITY.

CUSTOMER PART NUMBER:
N/A

FINISH/COLOUR: BLACK/WHITE

DRAWING NUMBER: N/A

A4

PROJECTION

Sheet 1 of 1