Crimp Attachment for Flexible Cable

Right Angle Crimp Plug - Flexible Cable

P.N.	Cable Group	Plt.	Ins.	Imp.	Crimp Tool
SMZ6112A6-NT30G-6-75	06	Nickel	Teflon	75	1 or 2
SMZ6112A6-3GT30G-6-75	06	Gold	Teflon	75	1 or 2
SMZ6112A6-3GT30G-19-75	19	Gold	Teflon	75	3

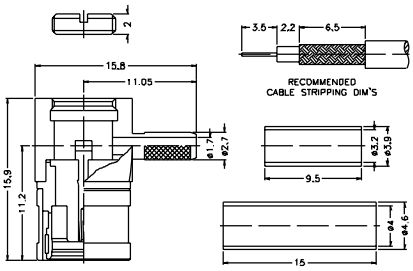

Note Female center contact

Assembly Instruction I - page 231

Bulkhead Feedthrough Crimp Jack - Flexible Cable

P.N.	Cable Group	Plt.	Ins.	Imp.	Crimp Tool
SMZ1421G6-3GT30G-6-75	06	Gold	Teflon	75	1 or 2

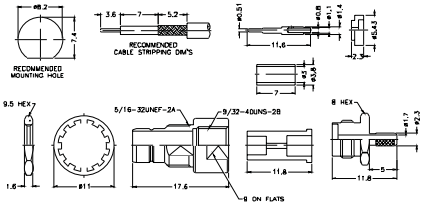

Note Male center contact

Assembly Instruction H - page 230

Printed circuit Board Connectors

Straight Jack for P.C. Board

P.N.	Cable Group	Plt.	Ins.	Imp.	Crimp Tool
SMZ1251B6-3GT30G-75	N/A	Gold	Teflon	75	N/A
SMZ1251B6-002-3GT30G-75	N/A	Gold	Teflon	75	N/A
"4.43 mm (.175"") PCB Legs"					

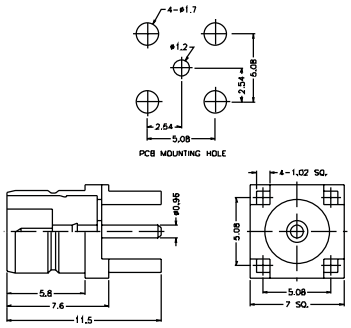

Note: Male center contact

PDF created with FinePrint pdfFactory Pro trial version www.pdffactory.com