MICRO SWITCH
a Honeywell Division
FED. MFG. CODE 91929

SWITCH-ENCLOSED

CATALOG LISTING
8LS10

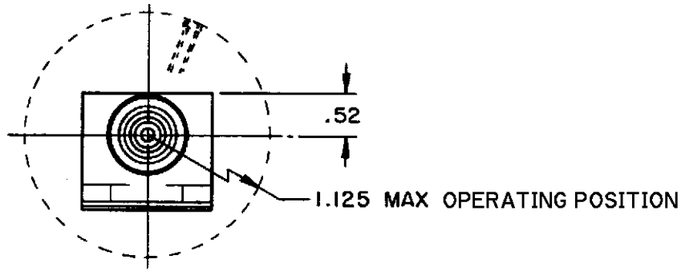

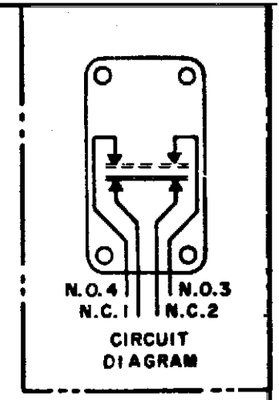

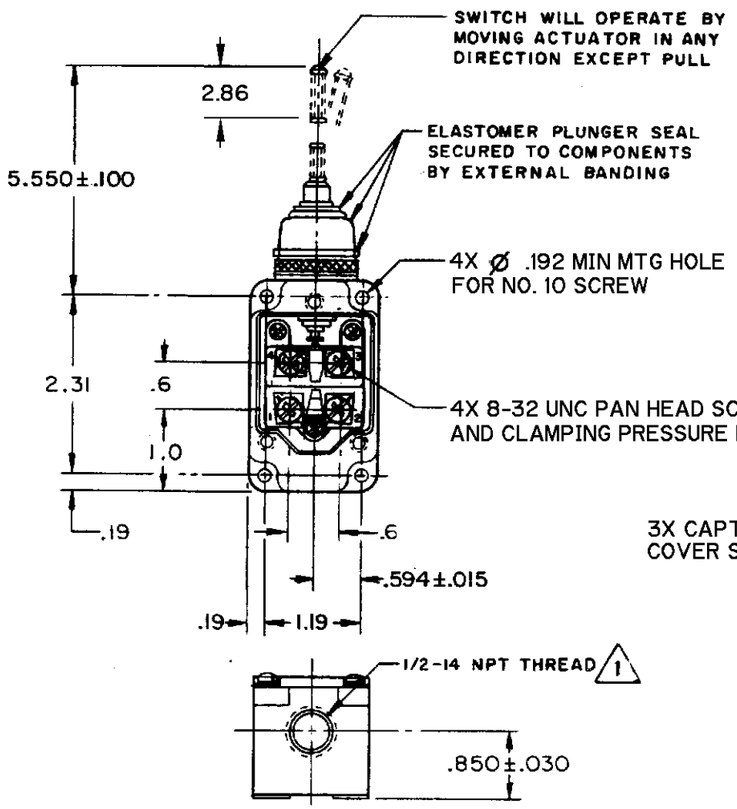

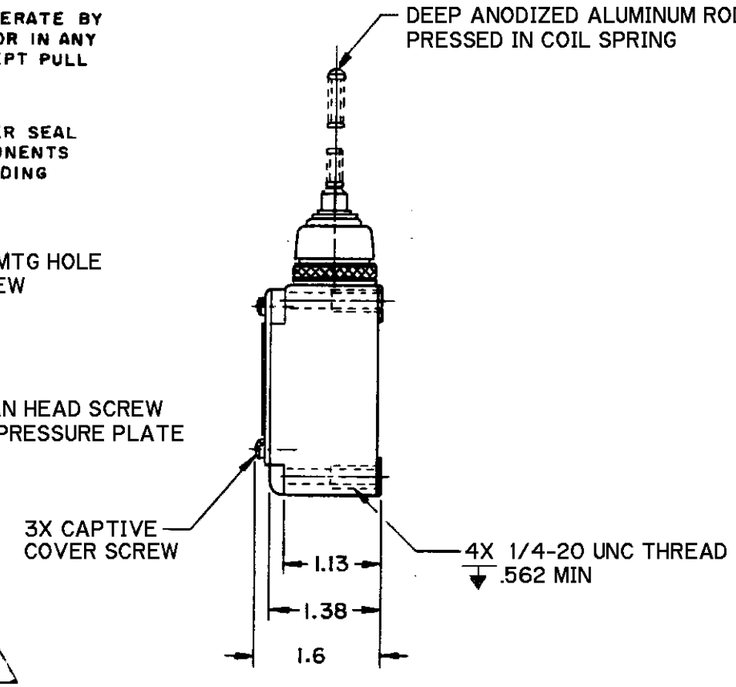

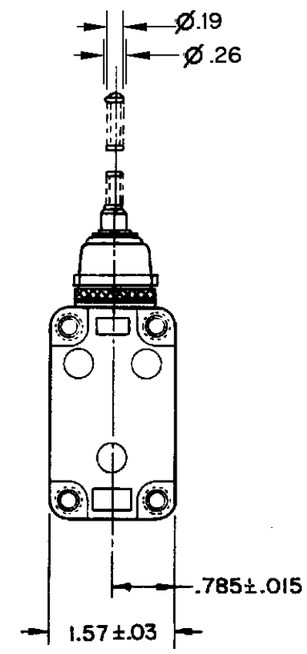

NOTE
1 SEAL TO BE PROVIDED BY USER

THIS DRAWING COVERS A PROPRIETARY ITEM AND IS THE PROPERTY OF MICRO SWITCH. A DIVISION OF HONEYWELL. THIS DRAWING IS NOT TO BE COPIED OR USED WITHOUT THE APPROVAL OF MICRO SWITCH

THIRD ANGLE PROJECTION

SCALE 1/2 : 1

DO NOT SCALE PRINT

CHARACTERISTICS	
OPERATING POSITION	1.125 MAX IN ANY DIRECTION
OPERATING FORCE	5 OZ MAX
FORCE AT 2.0	10 OZ MAX
SWITCH-BASIC REPLACEMENT	2MN1

ELECTRICAL DATA

CONTACT ARRANGEMENT
(SEE CIRCUIT DIAGRAM)

10A-120, 240 OR 480 VAC
1/3 HP-120 VAC; 3/4 HP-240 VAC
0.8A-115 VDC; 0.4A-230 VDC; 0.1A-550VDC
PILOT DUTY 600 VAC MAX

UNLESS OTHERWISE SPECIFIED TOLERANCES ARE

ONE PLACE	(.0)	±.030
TWO PLACE	(.00)	±.015
THREE PLACE	(.000)	±.005
ANGLES		±

WEIGHT

CATALOG LISTING 8LS10
PAGE 1 OF 1
ISSUE 1
REPLACES
RELEASE NO. PR-23887
CHECK
REVISIONS
CHECK 19 MAR 99 J A F
CHECK
DRAWN 19 MAR 99 J A F
FORMTEK