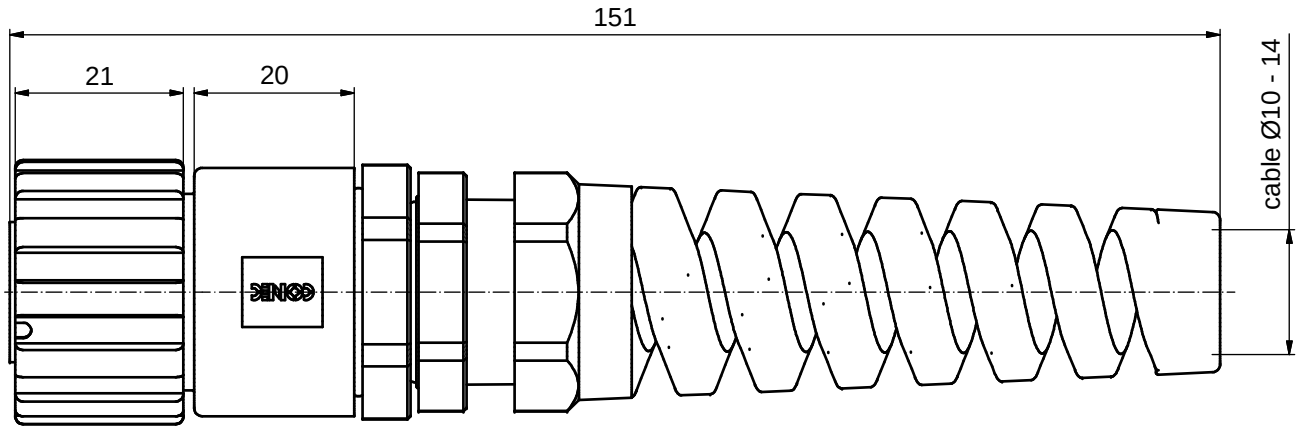

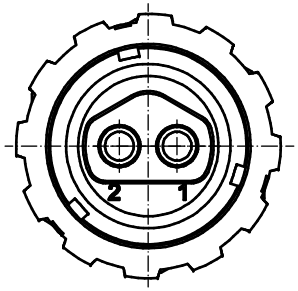

2 CONTACTS WILL BE SUPPLIED LOOSE

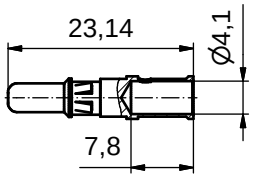

STRIPPING DIMENSIONS

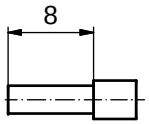

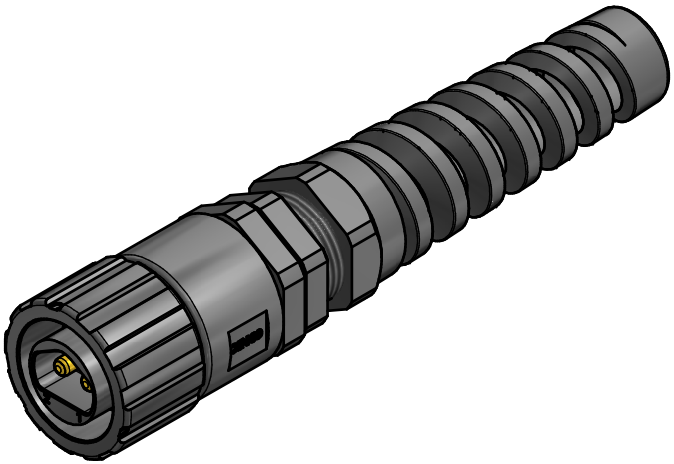

NOTES:

1. MATERIAL AND FINISH:
   - COUPLER RING: PA GF (BLACK); UL94 V-0; UL (f1) RATED
   - PLUG HOUSING: PA GF (BLACK); UL94 V-0; UL (f1) RATED
   - CABLE GLAND: PA (BLACK), UL94 V-0; UL (f1) RATED
   - CABLE GLAND RUBBER RING: NBR; COLOR: BLACK
   - CABLE FITTING: PA (BLACK); UL94 V-0; UL (f1) RATED
   - INTERFACIAL SEAL: SILICONE; COLOR: WHITE
   - RETAINING RING: STAINLESS STEEL
2. HIGH POWER CONTACTS; CRIMP; 30A
   - FOR USE WITH CABLE AWG 8* - 10
   - MATERIAL: COPPER ALLOY
   - PLATING, MATING AREA: GOLD FLASH over NICKEL
   - PLATING, TERMINATION SIDE: 160-240µin TIN over 80µin NICKEL
   - CONTACTS WILL BE SUPPLIED LOOSE
   - CRIMPING: USE CRIMP TOOL 360X10409X
     WITH TOOL INSERT 360X20029X
     SELECTOR SETTINGS: 5 FOR AWG 8*; 4 FOR AWG 10
3. OPERATING TEMPERATURE: -40℃ to +100℃
4. WORKING VOLTAGE: 48V AC/DC
5. IP67 RATED WHEN COVERED OR FULLY MATED WITH THE APPROPIATE MATING CONNECTOR
6. *NOTE: FOR AWG 8 STRANDED 19/21, 37/24 and 65/26 WIRE ONLY

RoHS compliant

THIS DRAWING MAY NOT BE COPIED OR REPRODUCED IN ANY WAY, AND MAY NOT BE PASSED ON TO A THIRD PARTY WITHOUT WRITTEN PERMISSION. OWNERSHIP AND COPYRIGHT OF CONEC GmbH

DO NOT ALTER CAD DRAWING BY HAND

rev.	description	date	name
a	Original		

	date	name
drawn	27.10.15	Lehmenkühler
appd.	27.10.15	Koch
norm		
d-old		

dim. in mm

scale: 1,5:1

material: SEE NOTES

title: IP67 POWER BAYONET 2pos
PLUG KIT / CRIMP
cable mount Ø10-14mm

dwg no: 17K1A478

DIN-A3

sh: 1

part no: 17-400583