THIS DRAWING IS UNPUBLISHED. RELEASED FOR PUBLICATION 1997
© COPYRIGHT 1997 BY - ALL RIGHTS RESERVED.

REVISIONS					
P	LTR	DESCRIPTION	DATE	DWN	APVD
	B4	ECR-15-016632	28NOV2016	GCM	MKO

PN 3-6

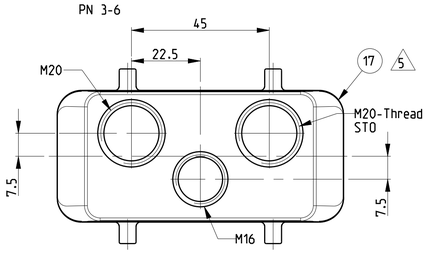

PN 0-2.0-5.3-3.3-4.3-5.3-1

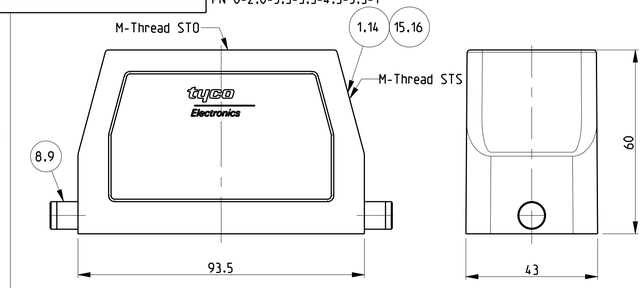

PN 0-1.0-4.2-5.2-6 & 2-8

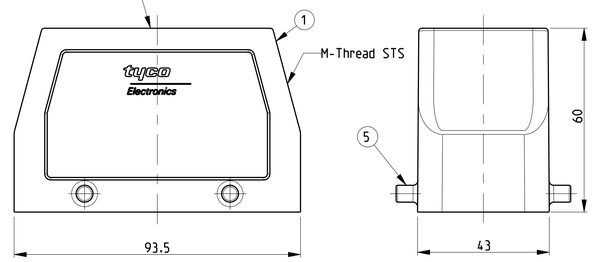

PN 0-3.0-6.2-7 & 2-9

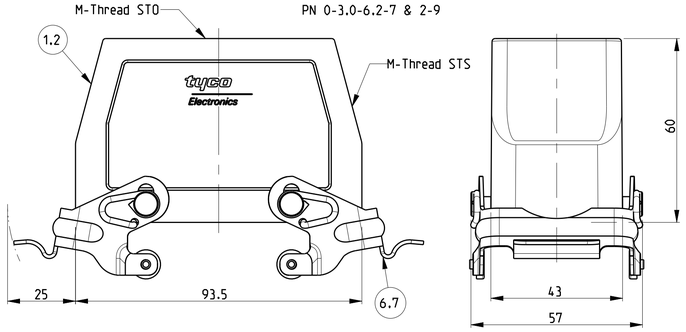

PN 1-6

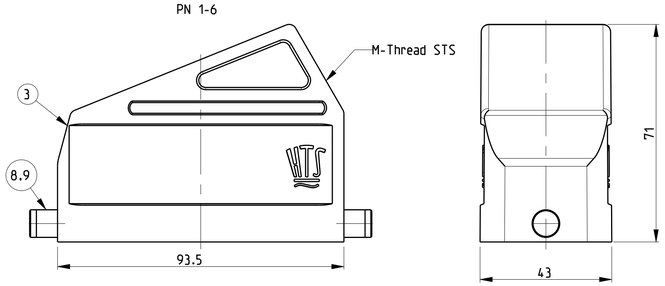

PN 1-0.3-0.0-7.0-9 & 1-2

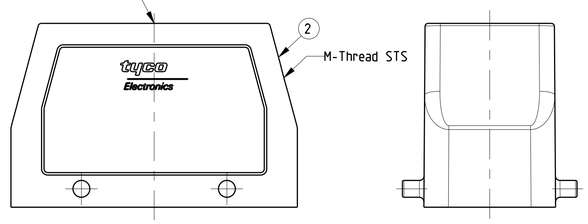

PN 2-4 & 1-4

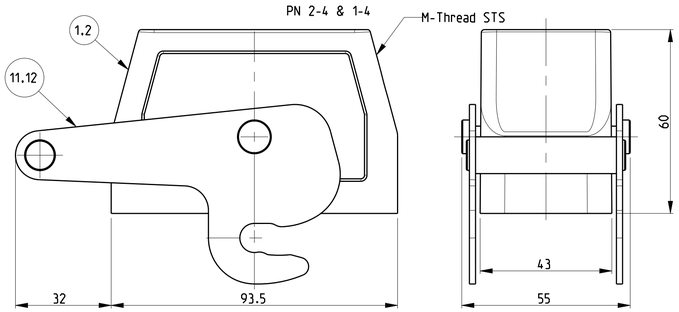

PN 1-8 & 1-5

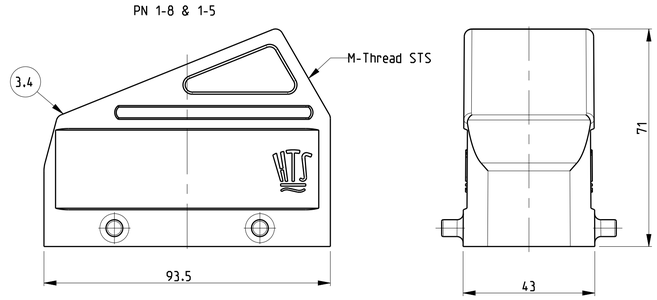

PN 3-2.1-1 & 0-8

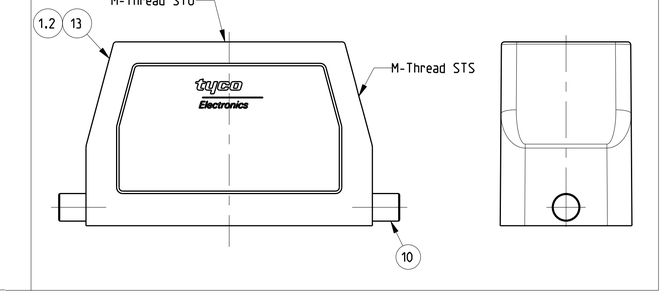

PN ~~2-1~~ & 2-2

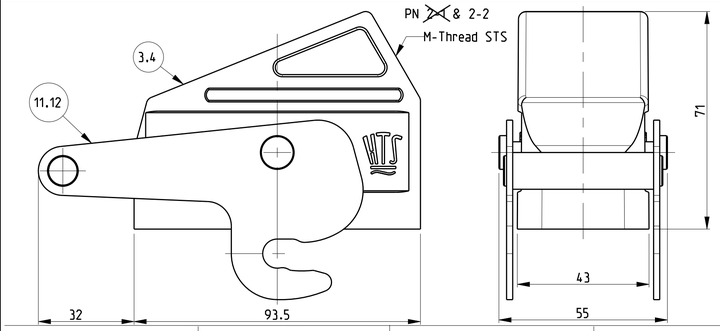

NOTES

1 Surface:- -Powder varnish grey
-Aluminium oxide+-Varnish black
-Chromital TCP passivation+varnish black

2 Varnish on the inside not necessary

3 Packaging
Packaging quantity 5 piece in a box

4 Special Packaging

| | | | | |