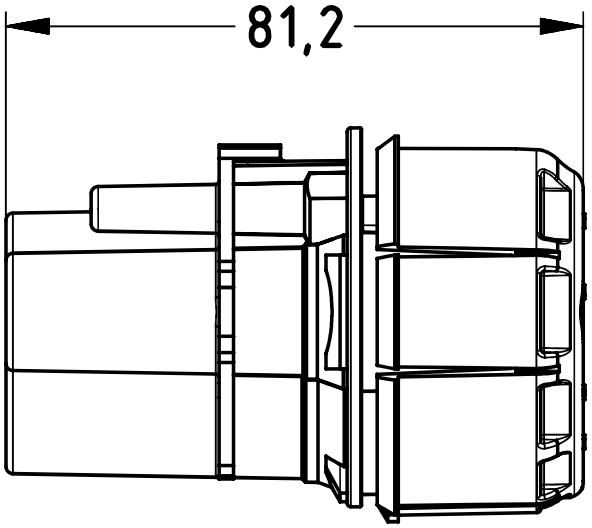

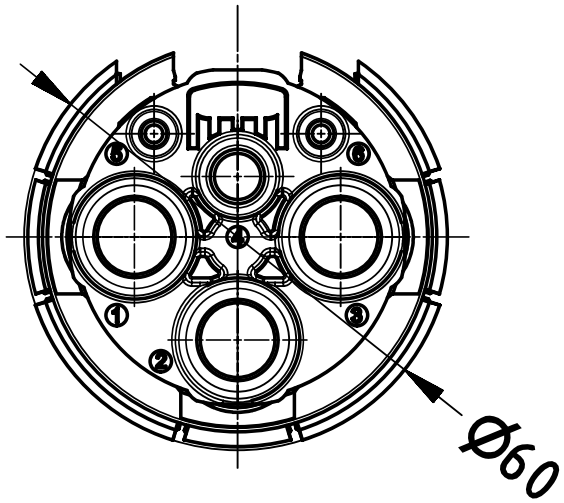

All Dimensions in mm Original Size DIN A4	Scale 1:1	Free size tol.		Ref. Sub.	
All rights reserved Department EL PD	Created by HOLLERT	Inspected by BALTRUSCHAT	Standardisation	Date 2023-10-06	State Final Release
	Title AEF DC-FI				Doc-Key / ECM-Nr. 100775430/UGD/000/E 500000254924
HARTING D-32339 Espelkamp	Type KD	Number 09 93 105 3101		Rev. E	Page 1/1

A4