Dimensions in mm

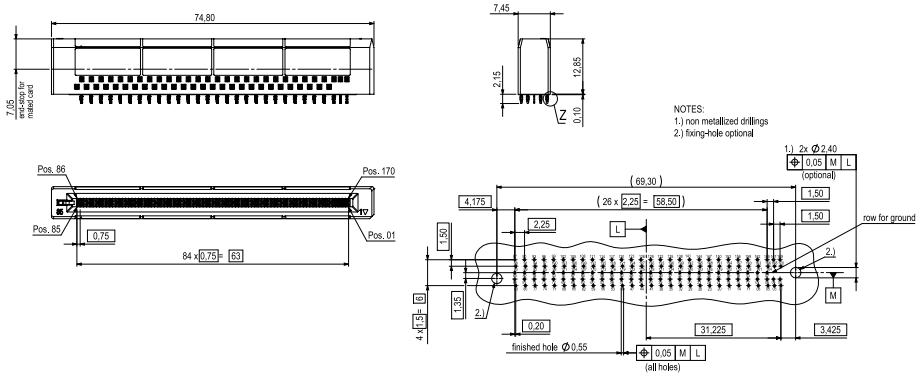

Hole pattern

No. of contacts	Press-fit technology
	Part number
170	502-14170-153

On request	Accessories
– With peg	– Press-fit tool (see page 196) – Support tool (see page 197)
Cross reference – Function GuideSpring/**con:**card+® (see page 13)	

con:card+®

PICMG®
Open Modular Computing Specifications