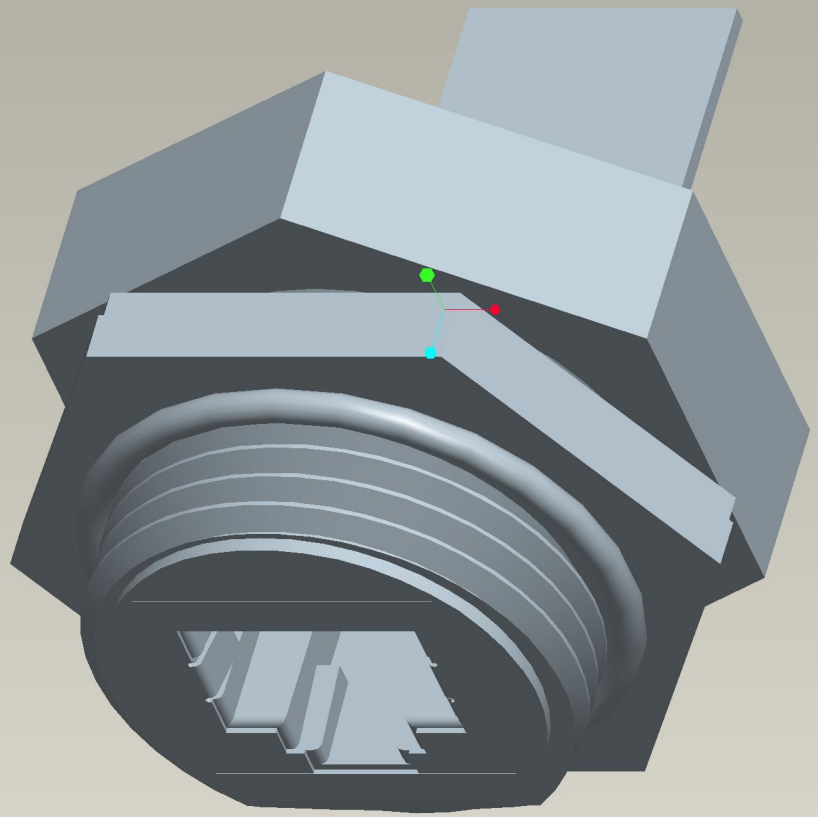

Instance:C-1-1546409-1