THIS DRAWING IS UNPUBLISHED. RELEASED FOR PUBLICATION 18.12.00 ,18.12.00
© COPYRIGHT 2001 BY TYCO ELECTRONICS CORPORATION. ALL RIGHTS RESERVED.

LOC	DIST
E	B

REVISIONS

P	LTR	DESCRIPTION	DATE	DWN	APVD
	A	RELEASE FOR PRODUCTION	18.12.00	RS	RG

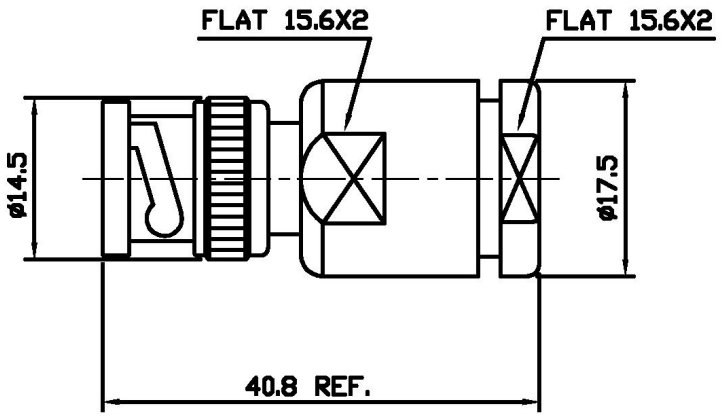

1. SUPPLIED SEMI-ASSEMBLED (PACK CONTAINS LOOSE PIECES)
VIEW SHOWS ASSEMBLED CONNECTOR (CABLE OMMITTED)
FOR CABLE TO CONNECTOR ASSEMBLY GUIDANCE
REFER TO TYCO INSTRUCTION SHEET I.S 411 - 3252

ALL DIMENSIONS ARE NOMINAL. FOR REFERENCE ONLY.

BAG	SINGLE ITEM	1-1478136-0
PACK TYPE	DESCRIPTION	PART NUMBER

DIE SET PART NUMBER	N/A
HANDTOOL PART NUMBER	N/A
FOR USE ON CABLES	RG8A/U, 213/U, URM67, PSF 1/4M
CONNECTOR PLATING DETAIL	SILVER
CONTACT PLATING DETAIL	SILVER
DIELECTRIC MATERIAL	PTFE
GASKET MATERIAL	WHITE SILICONE RUBBER

THIS DRAWING IS A CONTROLLED DOCUMENT.

DIMENSIONS: MM

TOLERANCES UNLESS OTHERWISE SPECIFIED:
0 PLC ± –
1 PLC ± –
2 PLC ± –
3 PLC ± –
4 PLC ± –
ANGLES ± –

MATERIAL –
FINISH –

DWN R SMITH 18.12.00
CHK R GOODALL 18.12.00
APVD R GOODALL 18.12.00
PRODUCT SPEC 108–3435
APPLICATION SPEC –
WEIGHT –

Tyco Electronics Corporation
Stanmore, Middlesex, HA7 4RS

NAME BNC STRT PLUG SOLDER RG213 50 OHM
–
–

SIZE	CAGE CODE	DRAWING NO	RESTRICTED TO
A3	00779	C-1478136	–

CUSTOMER DRAWING | SCALE NTS | SHEET 1 OF 1 | REV A

AMP 1470–19 REV 31MAR2000

G:\Engineering\Devon Engineering\MACOM GREENPAR COAX\1478 drwgs AMENDED\complete–ready for REDC\1478136–C.dwg