THIS DRAWING IS UNPUBLISHED. RELEASED FOR PUBLICATION 20
© COPYRIGHT 20 BY TYCO ELECTRONICS CORPORATION. ALL RIGHTS RESERVED.

LOC	DIST
AD	00

REVISIONS

P	LTR	DESCRIPTION	DATE	DWN	APVD
	A	RELEASED	04APR2007	BC	DB
	A1	REV PER ECO-09-013613	10JUL2009	AEG	DD

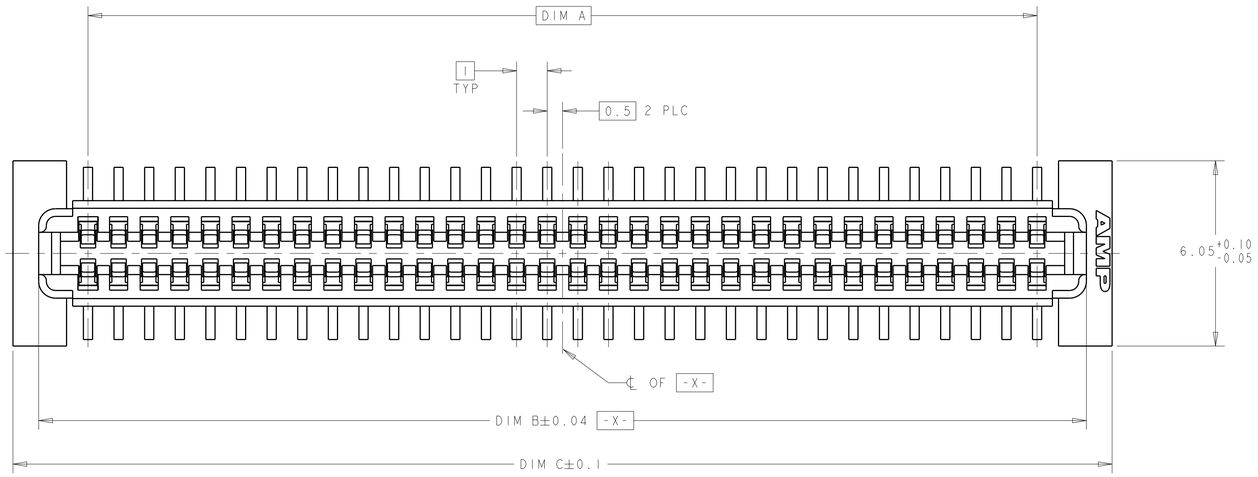

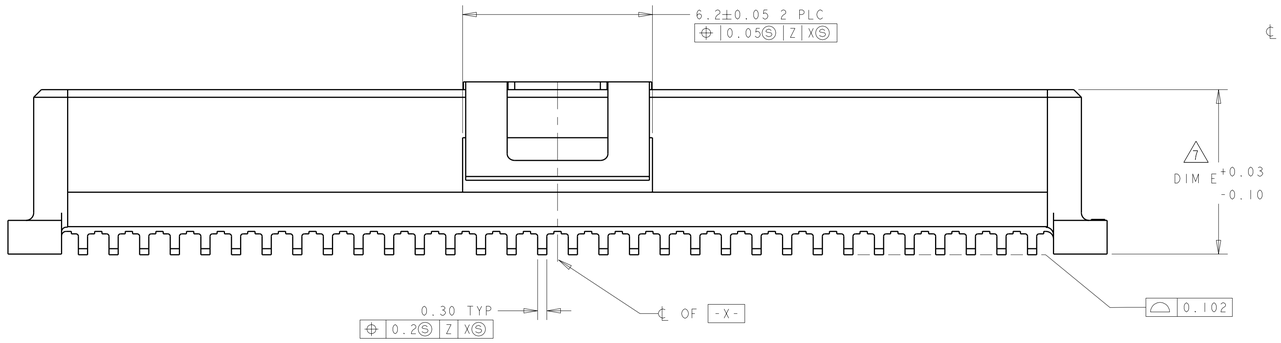

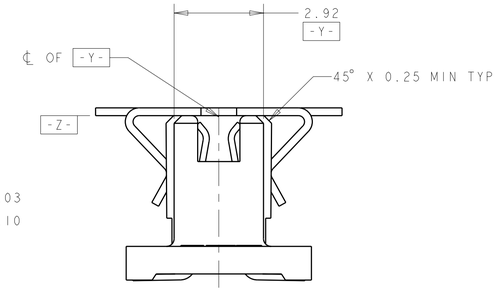

1. HOUSING MATERIAL: POLYPHTHALAMIDE, COLOR: BLACK
   CONTACT MATERIAL: PHOSPHOR BRONZE
2. CONTACT FINISH: 0.00381 MINIMUM MATTE TIN-LEAD (93-7) ON SOLDER AREA, 0.00127 MINIMUM GOLD ON MATING AREA, BOTH OVER 0.00127 MINIMUM NICKEL ON ENTIRE CONTACT.
3. DATUM LOCATIONS AND BASIC DIMENSIONS TO BE ESTABLISHED BY THE CUSTOMER. CONSULT AMP ENGINEERING WHEN PLACING MULTIPLE CONNECTORS ON A PC BOARD.
4. PACKAGED IN TAPE ON REEL PER EIA-481.
5. VACUUM COVER DESIGNED FOR 4mm DIA. NOZZLE. COVER TO BE REMOVED AFTER SOLDERING. COVER OMITTED FROM SOME VIEWS FOR DIMENSIONAL CLARITY.
6. SHORTER SOLDER LANDS MAY BE USED PER EIA 700AAAB, HOWEVER 2.4 LENGTH ASSURES OPTIMUM SOLDER FILLET REGARDLESS OF MANUFACTURER OF CONNECTOR.
7. REFERRED TO AS DIM H IN EIA 700AAAB SPECIFICATION.
8. 5.5 MIN DIA TARGET AREA FOR VACUUM PICK-UP.
9. SEE CATALOG FOR OTHER MATING CONNECTOR OPTIONS.

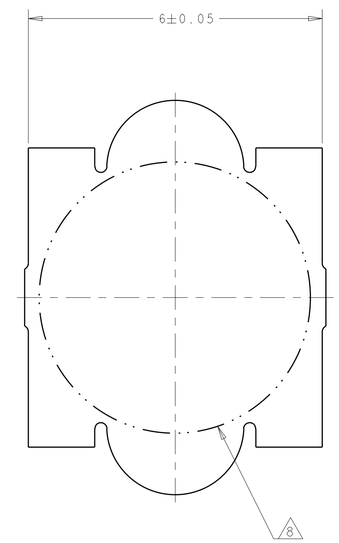

VACUUM COVER

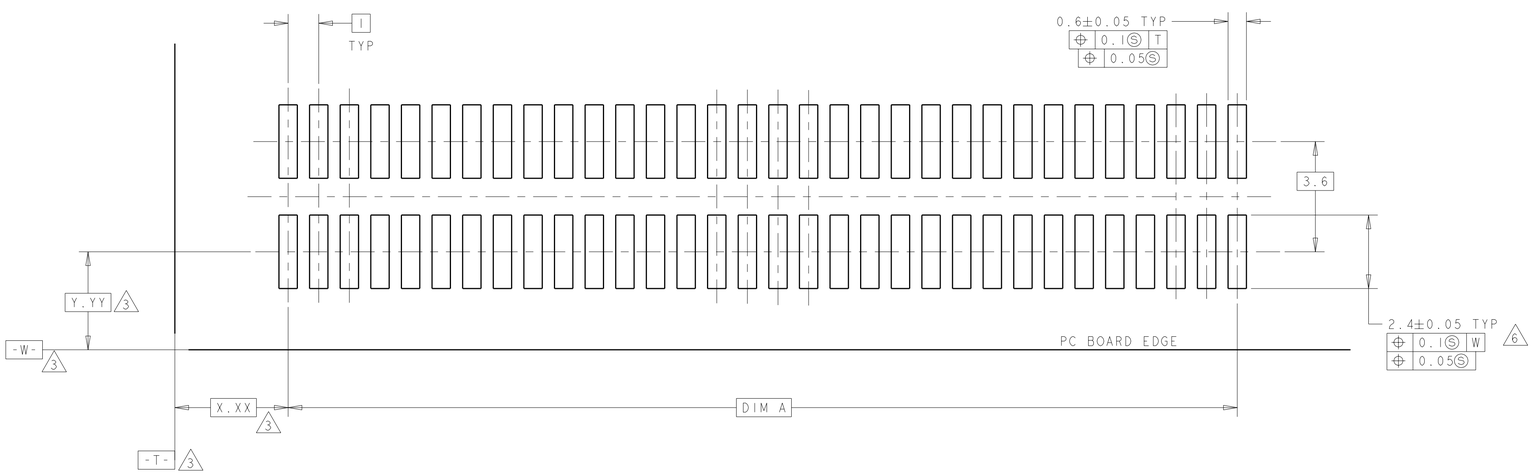

RECOMMENDED PC BOARD LAYOUT

FINISH	DIM E	DIM C	DIM B	DIM A	MATING CONNECTOR 9	STACK HGTS	POS	TE PART NO
2	10.37	35.9	34.22	31	1-120534-1	15	64	2007009-5
2	10.37	35.9	34.22	31	1-120533-1	14	64	2007009-5
2	8.37	35.9	34.22	31	1-120534-1	13	64	2007009-4
2	7.37	35.9	34.22	31	1-120534-1	12	64	2007009-3
2	7.37	35.9	34.22	31	1-120533-1	11	64	2007009-3
2	5.37	45.9	44.22	41	1-120534-2	10	84	2007009-2
2	5.37	45.9	44.22	41	1-120533-2	9	84	2007009-2
2	5.37	45.9	44.22	41	1-120532-2	8	84	2007009-2
2	5.37	35.9	34.22	31	1-120534-1	10	64	2007009-1
2	5.37	35.9	34.22	31	1-120533-1	9	64	2007009-1
2	5.37	35.9	34.22	31	1-120532-1	8	64	2007009-1

THIS DRAWING IS A CONTROLLED DOCUMENT FOR TYCO ELECTRONICS CORPORATION. IT IS SUBJECT TO CHANGE AND THE CONTROLLING ENGINEERING ORGANIZATION SHOULD BE CONTACTED FOR THE LATEST REVISION.

DIMENSIONS: mm

TOLERANCES UNLESS OTHERWISE SPECIFIED:
0 PLC ±-
1 PLC ±-
2 PLC ±0.03
3 PLC ±0.003
4 PLC ±-
ANGLES ±0°-1'

MATERIAL 1

FINISH SEE TABLE

DWN B.CARBO 04APR2007
CHK D.BRATINA 04APR2007
APVD D.BRATINA 04APR2007
PRODUCT SPEC 502-1079
APPLICATION SPEC 114-25045
WEIGHT -

Tyco Electronics
Tyco Electronics Corporation
Harrisburg, PA 17105-3608

NAME RCPT ASSY,W/COVER,1.0mmFH(IEEE1386) CONNECTOR

SIZE	CAGE CODE	DRAWING NO	RESTRICTED TO
A1	00779	C-2007009	-

CUSTOMER DRAWING | SCALE 10:1 | SHEET 1 OF 1 | REV A1