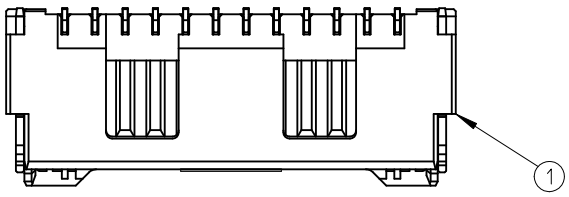

8,10極ハウジング形状
(HOUSING FORM OF 8,10CKT)
SCALE 2:1

No.	PART	MATERIAL
1	HOUSING	耐熱性樹脂 UL94V-0 HEATPROOF RESIN UL94V-0
2	TERMINAL A	銅合金 COPPER ALLOY
		錫メッキ：1.0 micro-meter MIN. TIN
3	TERMINAL B	ニッケルメッキ（下地）：1.0 micro-meter MIN. NICKEL (UNDER PLATING)
4	NAIL	銅合金 COPPER ALLOY
		錫メッキ：1.0 micro-meter MIN. TIN
		ニッケルメッキ（下地）：1.0 micro-meter MIN. NICKEL (UNDER PLATING)

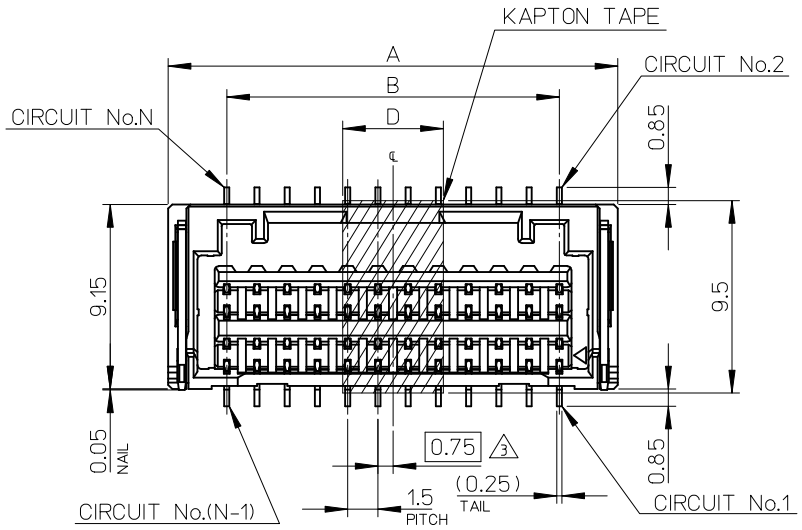

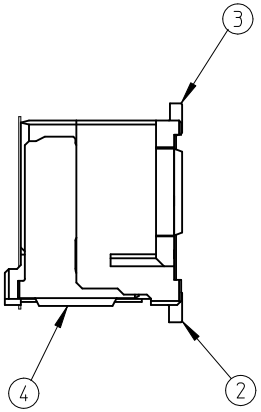

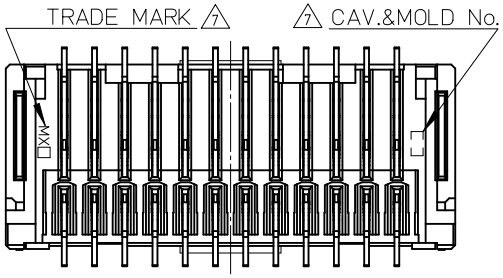

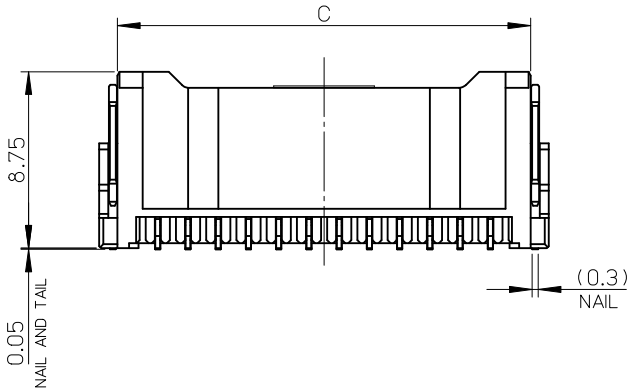

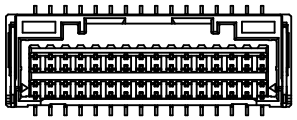

30,32極ハウジング形状
(HOUSING FORM OF 30,32CKT)
SCALE 2:1

EMBOSSED TAPE PACKAGE オーダー番号 ORDER No.	D	C	B	A	CIRCUIT
503154 - 329*	5	26.5	22.5	28.3	32
503154 - 309*	5	25.0	21.0	26.8	30
503154 - 289*	4	23.5	19.5	25.3	28
503154 - 249*	4	20.5	16.5	22.3	24
503154 - 229*	4	19.0	15.0	20.8	22
503154 - 209*	4	17.5	13.5	19.3	20
503154 - 169*	4	14.5	10.5	16.3	16
503154 - 129*	3	11.5	7.5	13.3	12
503154 - 109*	3	10	6.0	11.8	10
503154 - 089*	3	8.5	4.5	10.3	8

REVISED
EC NO: J2010-2056
DRWN:YGOTO 2010/02/04
CH'KD:KASAKAWA 2010/04/16
APPR:NUKITA 2010/04/17
DESCRIPTION
REV G

GENERAL TOLERANCES
(UNLESS SPECIFIED)

10 UNDER	±0.2
10 OVER 30 UNDER	±0.25
30 OVER	±0.3
ANGULAR ±1 °	

DRAFT WHERE APPLICABLE MUST REMAIN WITHIN DIMENSIONS

DIMENSION STYLE: MM ONLY	SCALE: 4:1	DESIGN UNITS: METRIC	THIRD ANGLE PROJECTION
DRAWN BY: T.HANYU	DATE: 2007/11/27	TITLE: 1.5 W/B CONN. DUAL ST REC. ASSY	
CHECKED BY: K.ASAKAWA	DATE: 2007/11/27		
APPROVED BY: YO.ITO	DATE: 2007/11/27	molex MOLEX INCORPORATED	
MATERIAL NO.: SEE CHART		DOCUMENT NO.: SD-503154-001	SHEET NO.: 1 OF 3
SIZE: A3	THIS DRAWING CONTAINS INFORMATION THAT IS PROPRIETARY TO MOLEX INCORPORATED AND SHOULD NOT BE USED WITHOUT WRITTEN PERMISSION		

NOTES

1. 嵌合相手：503149-****
   MATE WITH : 503149-****
2. 端子テール部及びネイルの平坦度：0.1mm MAX.
   TAIL AND NAIL COPLANARITY TO BE 0.1 MAX.
3. (極数／2)=偶数に適用
   APPLY FOR (CIRCUIT SIZE/2)=EVEN
4. 端子テール部及びネイルに錫メッキを使用している為、
   外観に摺動痕が付く場合があります。
5. 製品番号
   MATERIAL No.

503154 - **9*

極数 CIRCUIT SIZE　　色 COLOR

COLOR	黒 BLACK	赤 RED	青 BLUE	緑 GREEN	ベージュ BEIGE (NATURAL)
COLOR No.	1	2	4	6	0

6. 本製品のプラスチック部に黒点・白点等が確認される場合や
   色合いが異なる場合がありますが、製品性能に影響はありません。
   THERE IS NO INFLUENCE IN THE PRODUCT
   PERFORMANCE THOUGH THE BLACK AND
   WHITE SPOT ETC.
   MIGHT BE CONFIRMED TO THE PLASTIC
   PART OF THIS PRODUCT AND THE SHADE
   MIGHT BE DIFFERENT.
7. トレードマーク：MXプラス1文字の製造工場を示すアルファベットにて表示
   但し"J"はJAPANを示す。(例 MXJ)
   キャビティー番号：1桁から2桁の数字にて表示
   金型番号：アルファベット1文字にて表示
   FORMED BY MX AND 1 MORE LETTER OF ALPHABET WHICH MEAN THE MANUFACTORY.
   BUT "J" MEANS JAPAN. (TO TRADE MARK) (e.g. MXJ)
   AND BY 1 - 2 DIGIT NUMBER (TO CAVITY No.)
   AND BY 1LETTER OF ALPHABET (TO MOLD No.)
8. コネクタ下にパターン及びスルーホールを設置する場合、基板面からのパターン盛り上がりは、0.1mm MAX.とする事。
   但し、図示したパターン禁止エリアは除く。
   THE UPSURGE ON THE P.C.BOARD SIDE TO BE 0.1mm MAX.
   WHEN SET UP A PATTERN AND A THROUGH HALL UNDER THE CONNECTOR.
9. ELV及びRoHS適合品
   ELV AND RoHS COMPLIANT
10. オーダー番号及びコネクタシリーズ番号
    ORDER No. AND CONNECTOR SERIES No.

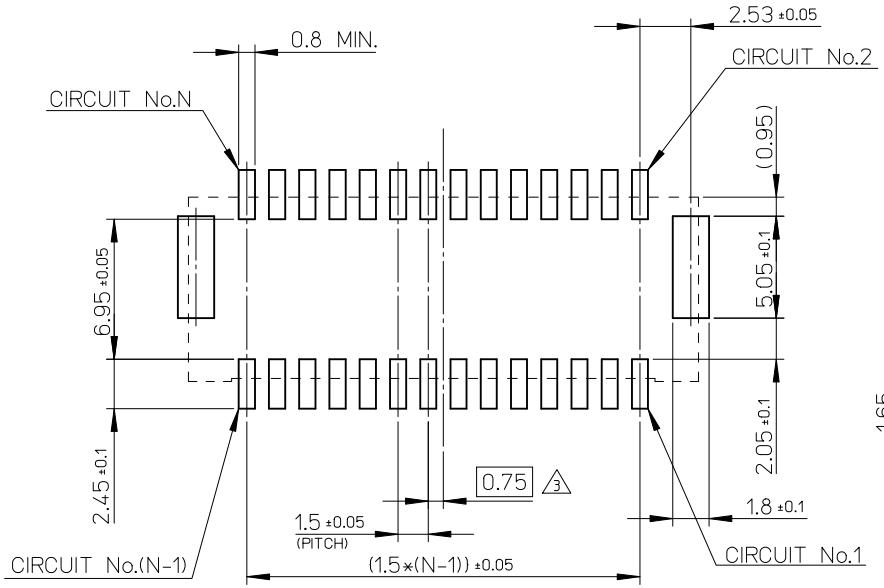

パターンレイアウト（参考）
PATTERN LAYOUT (REF.)

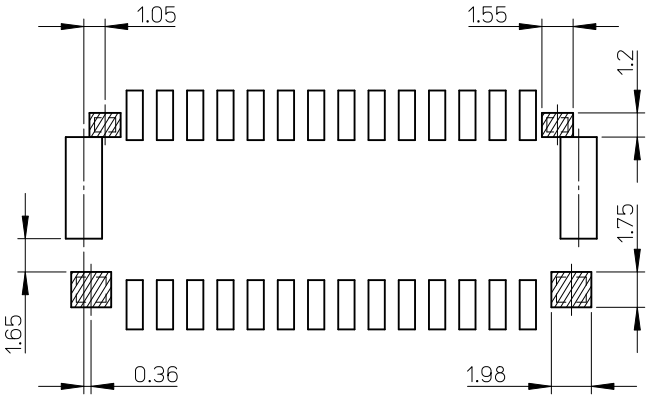

8 パターン禁止エリア（参考）
PATTERN PROHIBITION AREA (REF.)

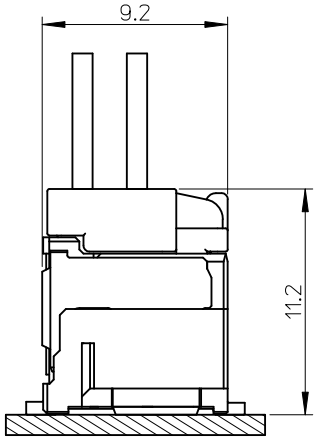

嵌合図
MATED CONNECTORES

REVISED	EC NO: J2010-2056	2010/02/04
	DRWN:YGOTO	2010/04/16
	CH'KD:KASAKAWA	2010/04/17
	APPR:NUKITA	

DESCRIPTION　REV

GENERAL TOLERANCES (UNLESS SPECIFIED)

10 UNDER	±0.2
10 OVER 30 UNDER	±0.25
30 OVER	±0.3
ANGULAR ±1 °	

DRAFT WHERE APPLICABLE MUST REMAIN WITHIN DIMENSIONS

DIMENSION STYLE: MM ONLY	SCALE: 4:1	DESIGN UNITS: METRIC	THIRD ANGLE PROJECTION
DRAWN BY: T.HANYU	DATE: 2007/11/27	TITLE: 1.5 W/B CONN. DUAL ST REC. ASSY	
CHECKED BY: K.ASAKAWA	DATE: 2007/11/27		
APPROVED BY: YO.ITO	DATE: 2007/11/27	molex MOLEX INCORPORATED	
MATERIAL NO.: SEE CHART		DOCUMENT NO.: SD-503154-001	SHEET NO.: 2 OF 3
SIZE: A3	THIS DRAWING CONTAINS INFORMATION THAT IS PROPRIETARY TO MOLEX INCORPORATED AND SHOULD NOT BE USED WITHOUT WRITTEN PERMISSION		

10 ORDER No. AND CONNECTOR SERIES No.

HOUSING COLOR : BEIGE (NATURAL)			HOUSING COLOR : BLACK		HOUSING COLOR : RED	
32	503154 - 3290	503154 - **90	503154 - 3291	503154 - **91	503154 - 3292	503154 - **92
30	503154 - 3090		503154 - 3091		503154 - 3092	
28	503154 - 2890		503154 - 2891		503154 - 2892	
24	503154 - 2490		503154 - 2491		503154 - 2492	
22	503154 - 2290		503154 - 2291		503154 - 2292	
20	503154 - 2090		503154 - 2091		503154 - 2092	
16	503154 - 1690		503154 - 1691		503154 - 1692	
12	503154 - 1290		503154 - 1291		503154 - 1292	
10	503154 - 1090		503154 - 1091		503154 - 1092	
8	503154 - 0890		503154 - 0891		503154 - 0892	
CIRCUIT	EMBOSSED TAPE PACKAGE オーダー番号 ORDER No.	CONNECTOR SERIES No. コネクタシリーズ番号	EMBOSSED TAPE PACKAGE オーダー番号 ORDER No.	CONNECTOR SERIES No. コネクタシリーズ番号	EMBOSSED TAPE PACKAGE オーダー番号 ORDER No.	CONNECTOR SERIES No. コネクタシリーズ番号

HOUSING COLOR : BLUE			HOUSING COLOR : GREEN	
32	503154 - 3294	503154 - **94	503154 - 3296	503154 - **96
30	503154 - 3094		503154 - 3096	
28	503154 - 2894		503154 - 2896	
24	503154 - 2494		503154 - 2496	
22	503154 - 2294		503154 - 2296	
20	503154 - 2094		503154 - 2096	
16	503154 - 1694		503154 - 1696	
12	503154 - 1294		503154 - 1296	
10	503154 - 1094		503154 - 1096	
8	503154 - 0894		503154 - 0896	
CIRCUIT	EMBOSSED TAPE PACKAGE オーダー番号 ORDER No.	CONNECTOR SERIES No. コネクタシリーズ番号	EMBOSSED TAPE PACKAGE オーダー番号 ORDER No.	CONNECTOR SERIES No. コネクタシリーズ番号

REV	DESCRIPTION	DRWN	CHK'D	APPR	DATE
G	REVISED EC NO: J2010-2056	YGOTO	KASAKAWA	NUKITA	2010/02/04 2010/04/16 2010/04/17

GENERAL TOLERANCES (UNLESS SPECIFIED)

10 UNDER	±0.2
10 OVER 30 UNDER	±0.25
30 OVER	±0.3
ANGULAR ±1 °	

DRAFT WHERE APPLICABLE MUST REMAIN WITHIN DIMENSIONS

DIMENSION STYLE: MM ONLY	SCALE: 4:1	DESIGN UNITS: METRIC	THIRD ANGLE PROJECTION
DRAWN BY: T.HANYU	DATE: 2007/11/27	TITLE: 1.5 W/B CONN. DUAL ST REC. ASSY	
CHECKED BY: K.ASAKAWA	DATE: 2007/11/27		
APPROVED BY: YO.ITO	DATE: 2007/11/27	molex MOLEX INCORPORATED	
MATERIAL NO.: SEE CHART		DOCUMENT NO.: SD-503154-001	SHEET NO.: 3 OF 3
SIZE: A3			

THIS DRAWING CONTAINS INFORMATION THAT IS PROPRIETARY TO MOLEX INCORPORATED AND SHOULD NOT BE USED WITHOUT WRITTEN PERMISSION

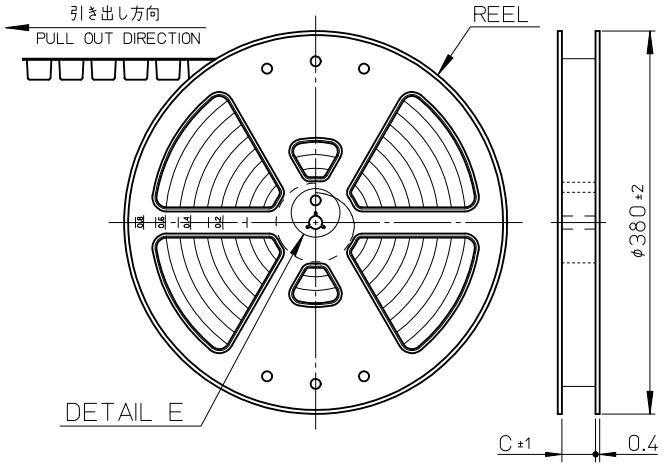

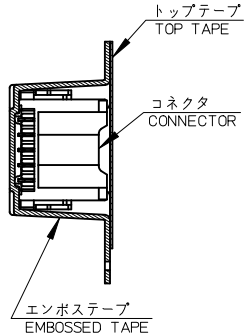

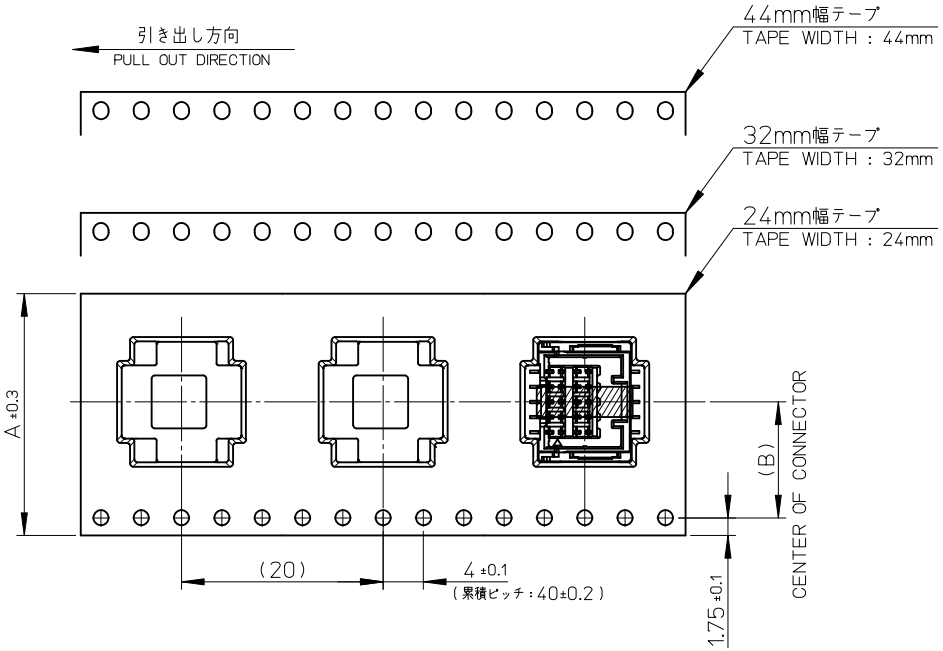

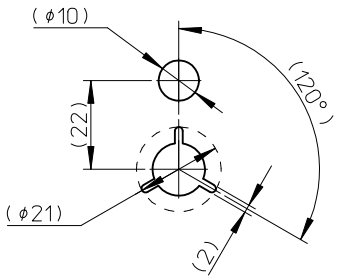

DETAIL E

C	B	エンボステープ幅 A WIDTH OF TAPE	5 製品番号 MATERIAL No.	CIRCUIT No.
45.5	20.2	44	503154-329*	32
45.5	20.2	44	503154-309*	30
45.5	20.2	44	503154-289*	28
45.5	20.2	44	503154-249*	24
45.5	20.2	44	503154-229*	22
45.5	20.2	44	503154-209*	20
33.5	14.2	32	503154-169*	16
33.5	14.2	32	503154-129*	12
25.5	11.5	24	503154-109*	10
25.5	11.5	24	503154-089*	8

REVISED
EC NO: J2010-2056
DRWN:YGOTO 2010/02/04
CH'KD:KASAKAWA 2010/04/16
APPR:NUKITA 2010/04/17
DESCRIPTION
REV D

GENERAL TOLERANCES (UNLESS SPECIFIED)

10 UNDER	±0.2
10 OVER 30 UNDER	±0.25
30 OVER	±0.3
ANGULAR ±1 °	

DRAFT WHERE APPLICABLE MUST REMAIN WITHIN DIMENSIONS

DIMENSION STYLE: MM ONLY
SCALE: 2:1
DESIGN UNITS: METRIC
THIRD ANGLE PROJECTION

DRAWN BY: T.HANYU DATE: 2007/11/27
CHECKED BY: K.ASAKAWA DATE: 2007/11/27
APPROVED BY: YO.ITO DATE: 2007/11/27

TITLE: EMBOSSED TAPE PACKAGE FOR 503154-****

molex MOLEX INCORPORATED

MATERIAL NO.: SEE CHART
DOCUMENT NO.: SD-503154-002
SHEET NO.: 1 OF 2
SIZE: A3

THIS DRAWING CONTAINS INFORMATION THAT IS PROPRIETARY TO MOLEX INCORPORATED AND SHOULD NOT BE USED WITHOUT WRITTEN PERMISSION

NOTE

1. 梱包数量 ： 450個／リール
NUMBER OF CONNECTORS : 450 PIECES/REEL

2. リードテープ長さ
LEAD TAPE LENGTH

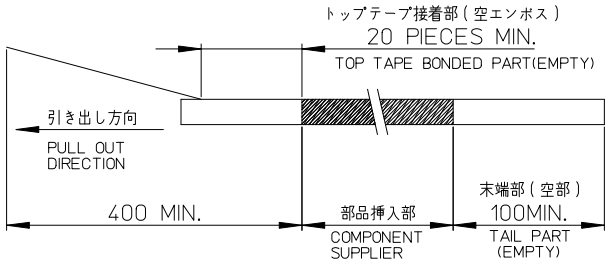

3. トップテープの剥離強度：0.1~0.3 N（10.2~132.5gf）
剥離方向は下記参照。
PEELING OFF FORCE OF TOP TAPE
PEELING DIRECTION AS SHOWN IN FOLLOWING FIGURE.

尚、本規格は出荷時に適用。（但し、輸送時に剥離が発生しない事）
THIS REQUIREMENT SHOULD BE APPLIED AT SHIPMENT.
PEEL OFF SHOLD NOT BE ALLOWED,DURING TRANSPORTION.

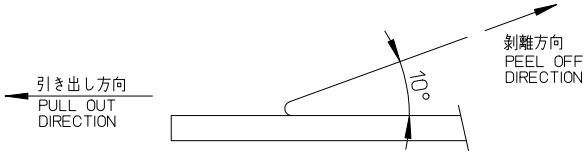

4. 製品詳細寸法については、SD-503154-001を参照して下さい。
PLEASE REFER TO SD-503154-001 FOR THE DETAILED DIMENSION OF THE CONNECTOR.

5 MATERIAL No. AND CONNECTOR SERIES No.

CIRCUIT No. \ COLOR	MATERIAL No. 黒 BLACK	赤 RED	青 BLUE	緑 GREEN	ベージュ BEIGE (NATURAL)
CIRCUIT No.32	503154-3291	503154-3292	503154-3294	503154-3296	503154-3290
CIRCUIT No.30	3091	3092	3094	3096	3090
CIRCUIT No.28	2891	2892	2894	2896	2890
CIRCUIT No.24	2491	2492	2494	2496	2490
CIRCUIT No.22	2291	2292	2294	2296	2290
CIRCUIT No.20	2091	2092	2094	2096	2090
CIRCUIT No.16	1691	1692	1694	1696	1690
CIRCUIT No.12	1291	1292	1294	1296	1290
CIRCUIT No.10	1091	1092	1094	1096	1090
CIRCUIT No.8	503154-0891	503154-0892	503154-0894	503154-0896	503154-0890
CONNECTOR SERIES No.	503154-**91	503154-**92	503154-**94	503154-**96	503154-**90

6. 材料
MATERIAL
キャリアテープ ： ポリスチレン
CARRIER TAPE : POLYSTYRENE
トップテープ ： ポリエステル、ポリエチレン、ポリエチレンテレフタレート
TOP TAPE : POLYESTER,POLYETHLENE,POLYETHYLENE TEREPHTHALATE
リール ： ポリスチレン（リサイクル材含む）
REEL : POLYSTYRENE (RECYCLE MATERIAL CONTAINED)

7. ELV及びRoHS適合品
ELV AND RoHS COMPLIANT

REVISED	EC NO:	DRWN:	CH'KD:	APPR:	DESCRIPTION	REV
	J2010-2056	YGOTO	KASAKAWA	NUKITA		
	2010/02/04	2010/04/16	2010/04/17			
D						

GENERAL TOLERANCES (UNLESS SPECIFIED)

10 UNDER	±0.2
10 OVER 30 UNDER	±0.25
30 OVER	±0.3
ANGULAR ±1 °	

DRAFT WHERE APPLICABLE MUST REMAIN WITHIN DIMENSIONS

DIMENSION STYLE: MM ONLY	SCALE: 2:1	DESIGN UNITS: METRIC	THIRD ANGLE PROJECTION
DRAWN BY: T.HANYU	DATE: 2007/11/27	TITLE: EMBOSSED TAPE PACKAGE FOR 503154-****	
CHECKED BY: K.ASAKAWA	DATE: 2007/11/27		
APPROVED BY: YO.ITO	DATE: 2007/11/27	molex MOLEX INCORPORATED	
MATERIAL NO.: SEE CHART		DOCUMENT NO.: SD-503154-002	SHEET NO.: 2 OF 2
SIZE: A3			

THIS DRAWING CONTAINS INFORMATION THAT IS PROPRIETARY TO MOLEX INCORPORATED AND SHOULD NOT BE USED WITHOUT WRITTEN PERMISSION