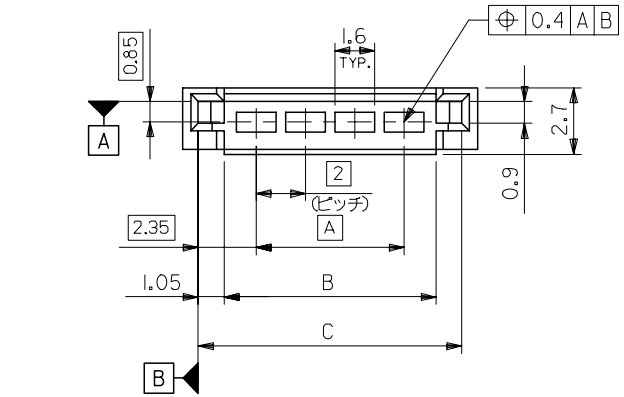

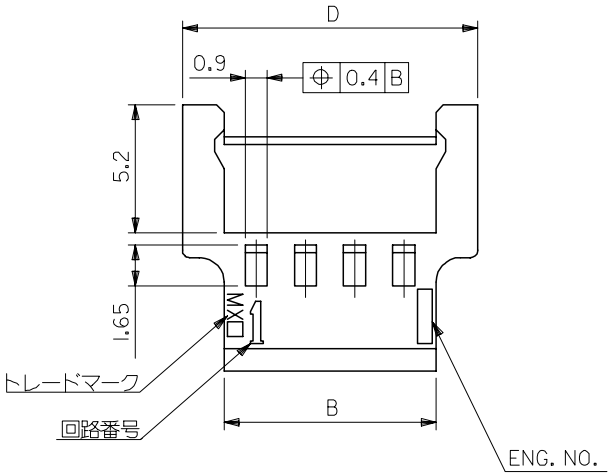

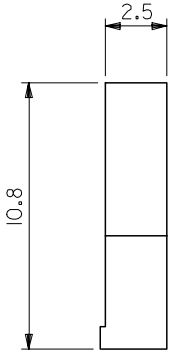

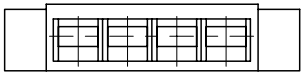

注記

1. 嵌合相手：51005
   MATE WITH : 51005
2. 適合ターミナル：50012
   APPLICABLE TERMINAL : 50012
3. ELV 及び RoHS適合品
   ELV AND RoHS COMPLIANT.

14	12.7	10.6	8	51006-0500	5
12	10.7	8.6	6	-0400	4
10	8.7	6.6	4	-0300	3
8	6.7	4.6	2	51006-0200	2
D	C	B	A	MATERIAL NO.	極数

51006-**00 MODEL NO.

MATERIAL

PBTP (UL94V-0)

REVISED
EC NO: J2008-0075 2007/07/16
DRWN:MNABEI 2007/07/17
CHKD:THARUYAMA 2007/07/17
APPR:NUKITA 2007/07/17
DESCRIPTION
REV D

GENERAL TOLERANCES (UNLESS SPECIFIED)

10 UNDER	±0.2
10 OVER 30 UNDER	±0.25
30 OVER	±0.3
ANGULAR ±3 °	

DRAFT WHERE APPLICABLE MUST REMAIN WITHIN DIMENSIONS

DIMENSION STYLE: MM ONLY
SCALE: 5:1
DESIGN UNITS: METRIC
THIRD ANGLE PROJECTION

DRAWN BY: S.MOCHIZUKI DATE: '89/08/22
CHECKED BY: H.H DATE: '90/05/16
APPROVED BY: M.ENOMOTO DATE: '90/05/16
MATERIAL NO.: SEE TABLE

TITLE: 2.0 WIRE TO WIRE CONN. PLUG HOUSING

molex MOLEX INCORPORATED

DOCUMENT NO.: SD-51006-001
SHEET NO.: 1 OF 1
SIZE: A3

THIS DRAWING CONTAINS INFORMATION THAT IS PROPRIETARY TO MOLEX INCORPORATED AND SHOULD NOT BE USED WITHOUT WRITTEN PERMISSION