SOLAR CRICKET

C9970

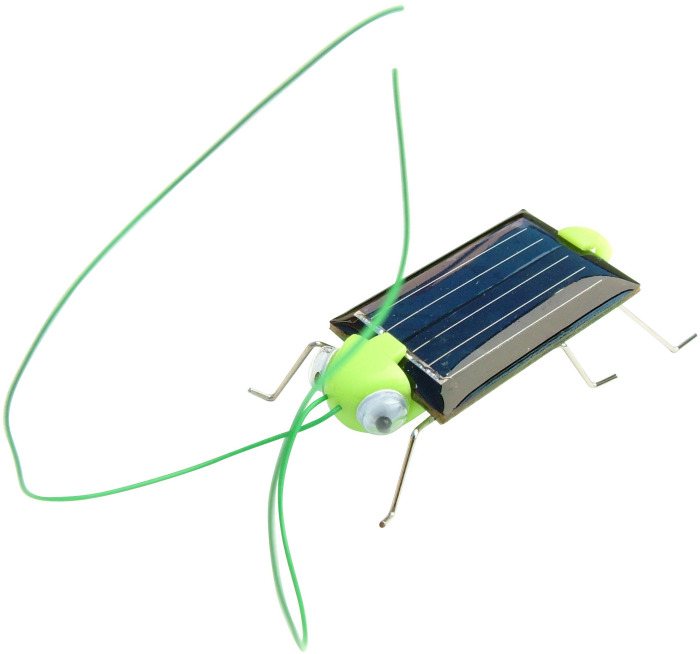

PARTS LIST

P1 Head	P2 Body	P3 Eyes
Qty 1 PC	Qty 1 PC	Qty 2 PCS
P4 Antenna	P5 Solar Panel With Motor	P6 Sponge
Qty 1 PC	Qty 1 PC	Qty 1 PC

ASSEMBLY INSTRUCTION

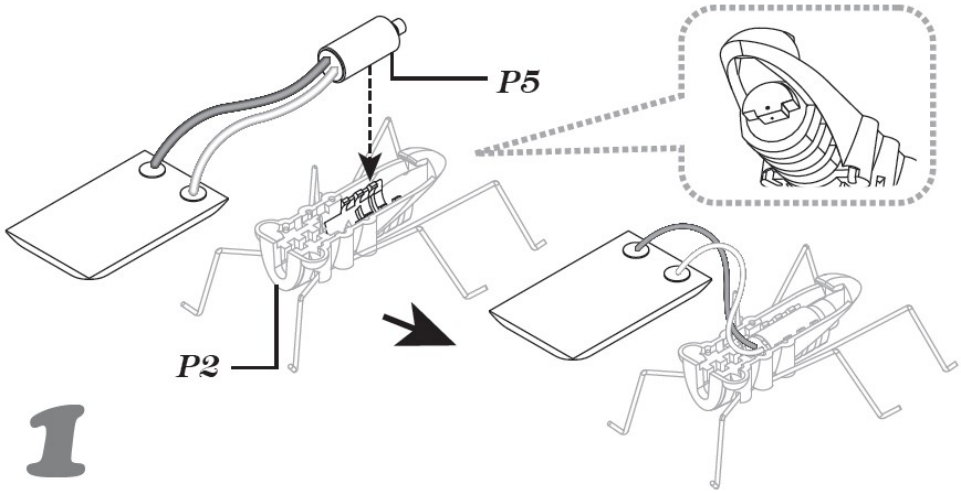

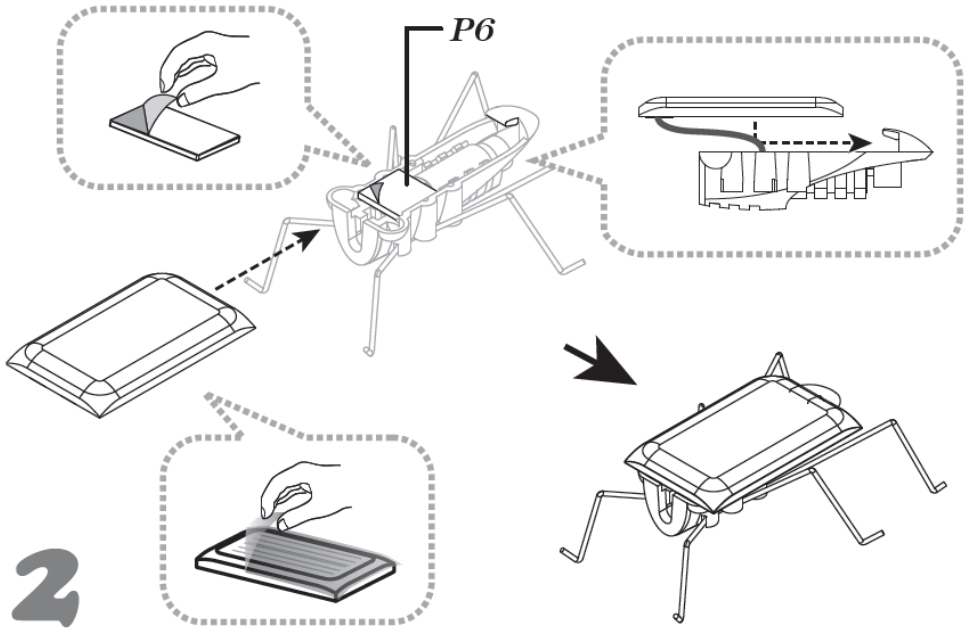

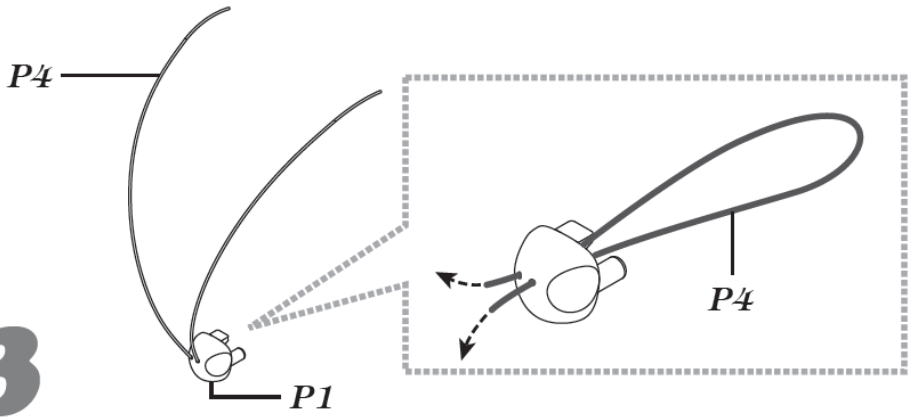

3

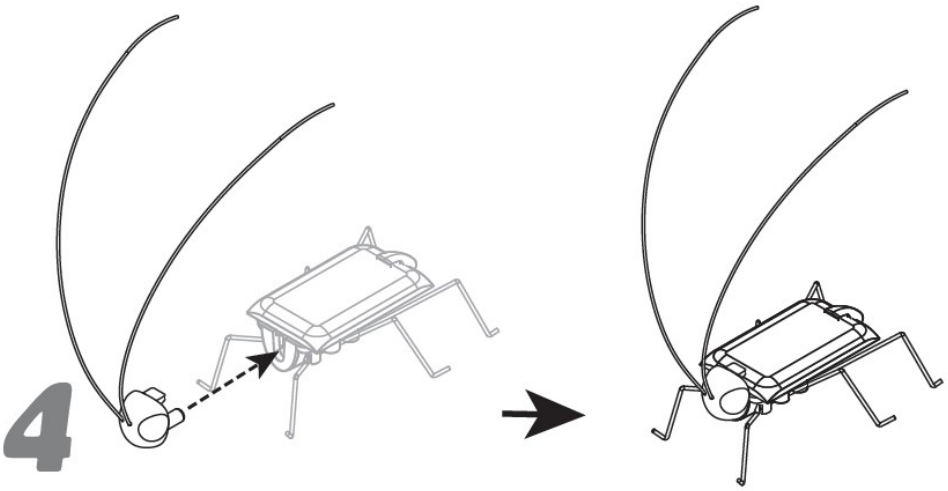

4

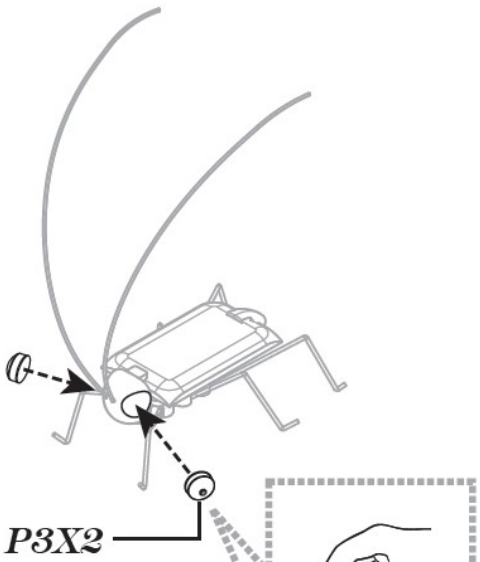

5

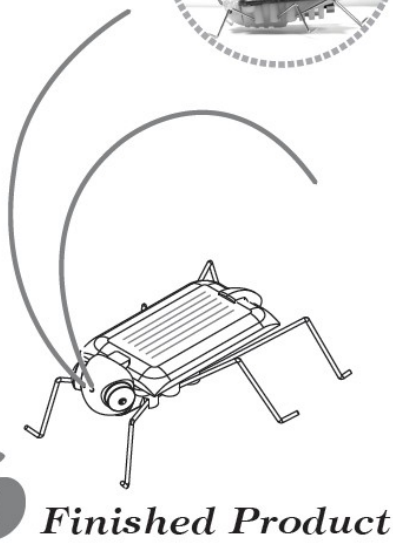

6 *Finished Product*

NOTE: This kit is recommended for children aged 10 years, always accompanied by an adult

Cebekit ® is a registered trademark of the group Fadisel