NMB-MAT

EMINEBEA.COM

5915PC(150x$^{\phi}$172x38^{L})

Metal Blades / Potting

General Specifications

Motor Protection: Thermal Protect
Motor Structure: Capacitor-Run Induction Motor
Insulation Resistance: 100M Ω or over with a DC500V Megger
Dielectric Withstand Voltage: AC 1800V 3s
Allowable Ambient Temperature Range:
-10°C ~ +60°C (Operating)
-40°C ~ +70°C (Storage)
(non-condensing environment)

Expected Life

Failure Rate: 10%
25°C 50,000 Hours

Outline

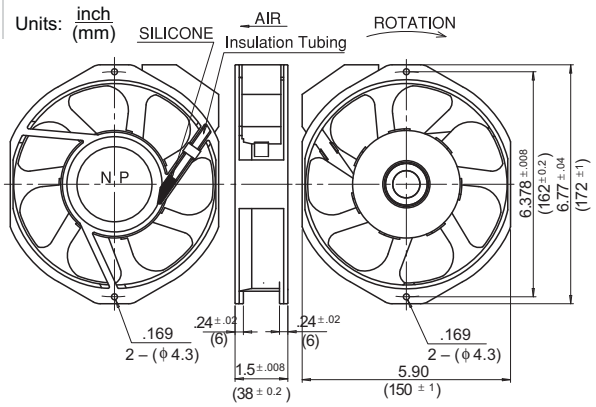

Characteristic Curves

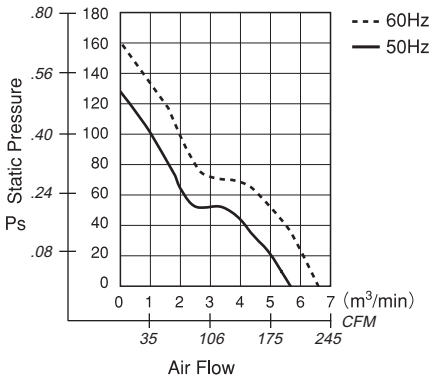

Panel Cut-outs

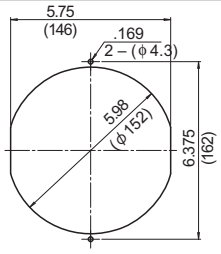

INLET SIDE / OUTLET SIDE

Material

Casing : Aluminum
Impeller : Steel
Bearing : Ball Bearings
Terminal: Faston #110 or Equiv

Specifications

MODEL	Rated Voltage (V)	Frequency (Hz)	Starting Voltage (V)	Current (A)*1	Input Power (W)+10/-20%	Speed (min^{-1})*3	Max. Air Flow (CFM)*3	Max. Air Flow (m^3/min)*3	Max. Static Pressure (in H_2O)*2	Max. Static Pressure (Pa)*2	Noise (dB)*2	Mass (g)
5915PC-10T-B30-SM0	100	50	65	0.53	42.0	2650	187.10	5.30	.510	127.5	48.0	950
		60		0.45	40.0	3150	222.39	6.30	.655	163.8	53.0	
5915PC-12T-B30-SM0	115	50	75	0.45	40.0	2650	187.10	5.30	.510	127.5	48.0	
		60		0.40	38.0	3150	222.39	6.30	.655	163.8	53.0	
5915PC-20T-B30-SM0	200	50	130	0.25	42.0	2650	187.10	5.30	.510	127.5	48.0	
		60		0.23	40.0	3150	222.39	6.30	.655	163.8	53.0	
5915PC-22T-B30-SM0	220	50	145	0.25	42.0	2650	187.10	5.30	.510	127.5	48.0	
		60		0.23	40.0	3150	222.39	6.30	.655	163.8	53.0	
5915PC-23T-B30-SM0	230	50	150	0.22	42.0	2650	187.10	5.30	.510	127.5	48.0	
		60		0.20	40.0	3150	222.39	6.30	.655	163.8	53.0	
5915PC-24T-B30-SM0	240	50	155	0.20	39.0	2650	187.10	5.30	.510	127.5	48.0	
		60		0.20	39.0	3150	222.39	6.30	.655	163.8	53.0	

Rotation: Counterclockwise as seen from the label side.
Airflow Outlet: Label side

*1:Maximum Values in Free Air *3:Minimum Values in Free Air
*2:Average Values in Free Air