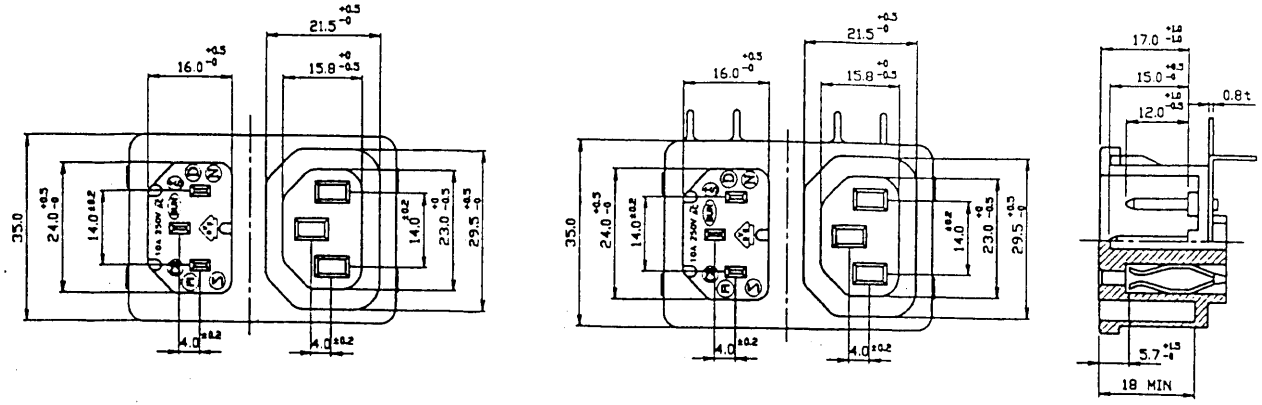

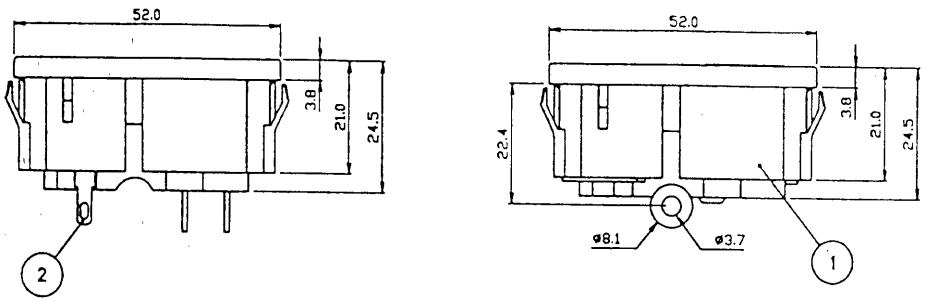

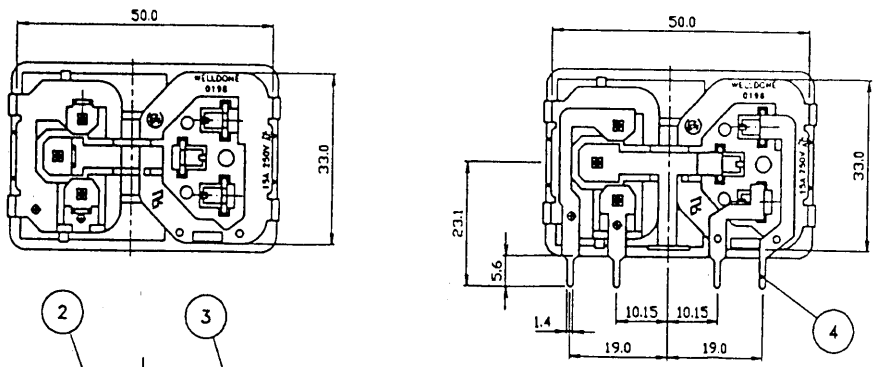

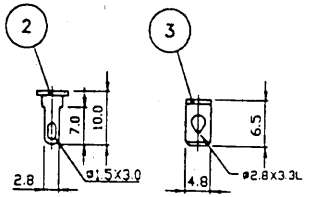

ALTERNATE TERMINAL

A: MATERIAL:

1.HOUSING: THERMOPLASTIC

2.TERMINAL: COPPER ALLOY

B: CHARACTERISTICS:

1.RATING: 15A 250V AC NORTH AMERICA

10A 250V AC EUROPE

2.INSULATION RESISTANCE: OVER 100MΩ 500VDC

3.DIELECTRIC STRENGTH: 2000V AC ONE MINUTE

C: APPROVALS:

UL,CSA,VDE,SEV,SEMKO,DEMKO,NEMKO,FIMKO & CB

D: ORDERING OPTION GUIDE:

ORDER#	ITEM REQ.	TERMINAL DIFFERENCE	CODE
0198-N	① + ②	2.8mm/SOLDER TABS	-N
0198-Q	① + ③	4.8mm/Q.Q./SOLDER TABS	-Q
0198-P	① + ④	PCB Type	-P

E: SPECIFICATION:

ITEM	PART NO.	PART NAME	Q'TY	SPECIFICATION	MATERIAL	REMARKS
④	T-0198P	TERMINAL	1SET	1.4X0.8T	COPPER ALLOY	TIN-PLATED
③	T-0198Q	TERMINAL	1SET	4.8X0.8T	COPPER ALLOY	TIN-PLATED
②	T-0198N	TERMINAL	1SET	2.8X0.8T	COPPER ALLOY	TIN-PLATED
①	H-0198	HOUSING	1	SNAP-IN TYPE	THERMOPLASTIC	

THICKNESS:
0.8 ~ 1.2t(X=50.3)
1.3 ~ 2.0t(X=50.5)

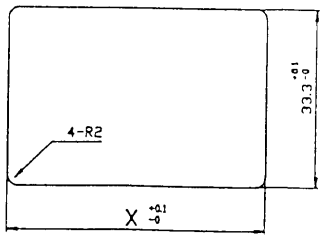

PANEL CUT-OUT

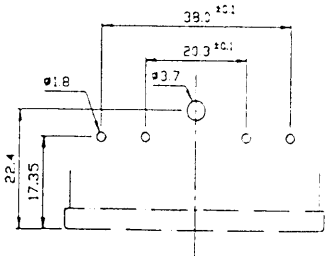

PCB LAYOUT

724-944 = 0198-N
724-956 = 0198-Q
724-968 = 0198-P

名稱	SNAP-IN MOUNTING TWIN TYPES INLET/OUTLET			比例 1/1
材質	NYLON66	單位	M/M	第三角
圖號	0198	核對		DIMENSION ANGULAR
編號	LSAA	設計	K.D.WU 09-19-'95	0-6 ±0.1 ±0.5° 6-30 ±0.2 30-120 ±0.3