power light source

Luxeon™ V Portable

Technical Data DS40

Luxeon™ is a revolutionary, energy efficient and ultra compact new light source, combining the lifetime and reliability advantages of Light Emitting Diodes with the brightness of conventional lighting.

The Luxeon V Portable, part of the Luxeon V family, delivers white luminous output 100 times brighter than standard small signal LEDs and 4X that of a standard Luxeon.

Luxeon V Portable is designed for portable lighting products such as flashlights, “miner” head-mounted lights, emergency-egress lighting, and other battery-operated applications. This device offers ruggedness, low power consumptions, and lifetimes greater than 50X conventional flashlight sources- over 500 hours compared to the typical 20-hour life for an incandescent bulb.

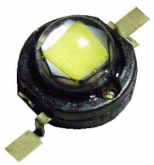

Luxeon V Portable is available in white.

Features

- Highest Flux LED in the world – 50X traditional “5mm” LEDs, and 4X a standard Luxeon.
- 500+ hours operation compared to just 20 hours for typical incandescent flashlight bulbs.
- Extreme Luminous Density – 20X the lm/mm^2 of a standard through hole LED
- More Energy Efficient than Incandescent and most Halogen lamps
- Low voltage DC operated
- Cool beam, safe to the touch
- Instant light (less than 100 ns)
- Fully dimmable
- No UV
- Superior ESD protection
- Uniform angular color uniformity superior to other solid state sources, eliminating color halos within the light beam

Benefits

- Compact low voltage light source for portable lighting applications
- Highly efficient source results in longer battery life
- Solid state technology eliminates fragile filament resulting in extremely rugged designs
- Much longer life than conventional light bulbs enables sealed for life designs

LUXEON™

Mechanical Dimensions - Emitter

Lambertian – LXHL-PW03

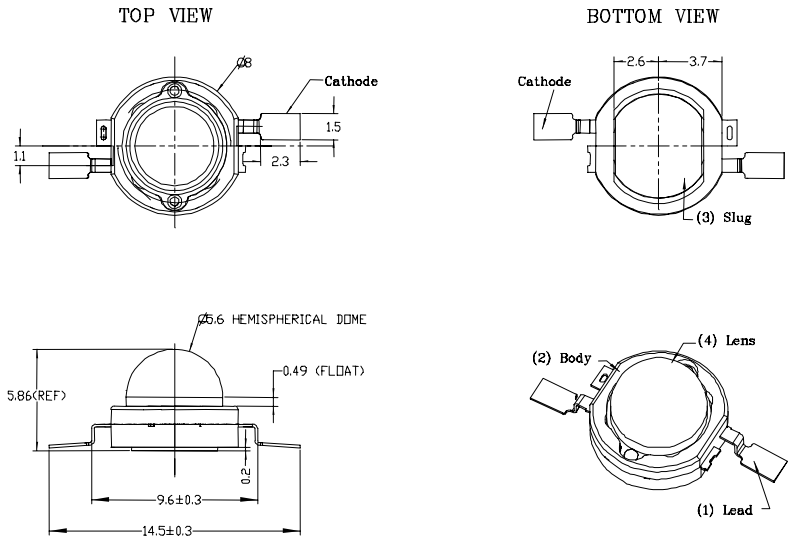

Notes:

1. The anode side of the device is denoted by a hole in the lead frame. Electrical insulation between the case and the board is required – slug of device is not electrically neutral. Do not electrically connect either the anode or cathode to the slug.
2. Drawings not to scale.
3. All dimensions are in millimeters.
4. All dimensions without tolerances are for reference only.

Side Emitting – LXHL-DW03

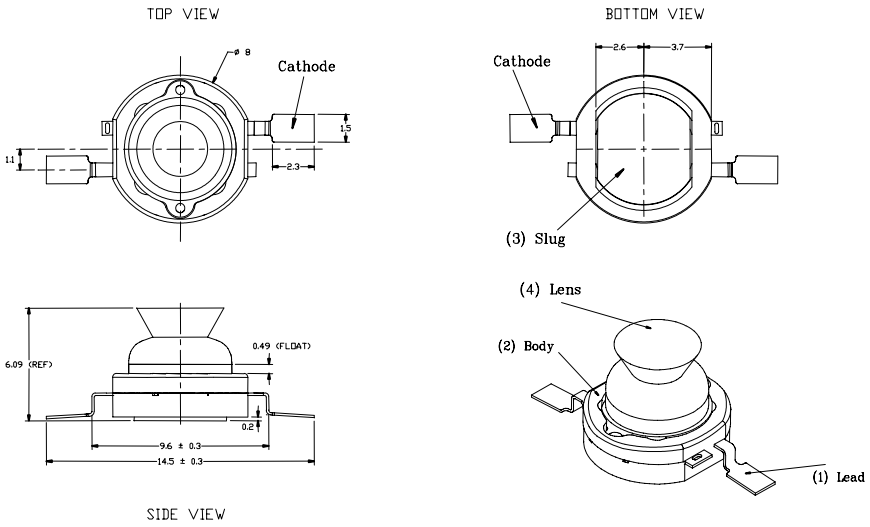

Notes:

1. The anode side of the device is denoted by a hole in the lead frame. Electrical insulation between the case and the board is required – slug of device is not electrically neutral. Do not electrically connect either the anode or cathode to the slug.
2. Drawings not to scale.
3. All dimensions are in millimeters.
4. All dimensions without tolerances are for reference only.

Mechanical Dimensions - Star

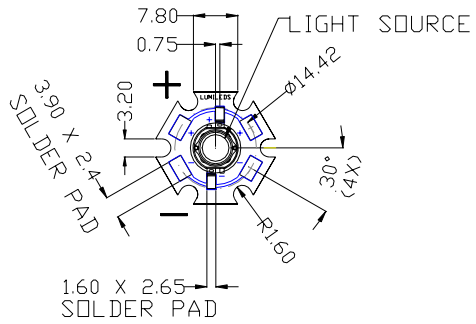

Side Emitting

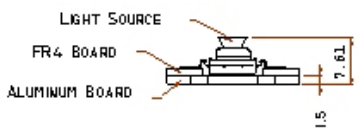

Lambertian (High Dome)

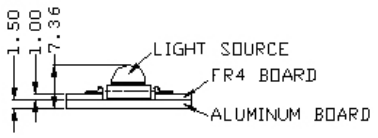

Lambertian –LXHL-LW6C
Side Emitting – LXHL-FW6C

Notes:

1. Slots in aluminum-core PCB for M3 or #4 mounting screw.
2. Electrical interconnection pads labeled on the aluminum-core PCB with "+" and "-" to denote positive and negative, respectively. All positive pads are interconnected, as are all negative pads, allowing for flexibility in array interconnection.
3. Electrical insulation between neighboring Stars is required – aluminum board is not electrically neutral.
4. Drawings not to scale.
5. All dimensions are in millimeters.

Part Number Matrix

Part Number	Beam Pattern	Configuration	Drive Current
LXHL-PW03	Lambertian	Emitter	700 mA
LXHL-LW6C	Lambertian	Star	700 mA
LXHL-DW03	Side Emitting	Emitter	700 mA
LXHL-FW6C	Side Emitting	Star	700 mA

Flux Characteristics at 700mA, Junction Temperature, T_J = 25°C

Luxeon V	Configuration	Radiation Pattern	Minimum Luminous FLux (lm) Φ_V [1,2]	Typical Luminous Flux (lm) Φ_V [2]
LXHL-PW03	Emitter	Lambertian	87.4	120
LXHL-LW6C	Star	Lambertian	87.4	120
LXHL-DW03	Emitter	Side Emitting	87.4	105
LXHL-FW6C	Star	Side Emitting	87.4	105

Notes:

1. Minimum luminous flux performance guaranteed within published operating conditions. Lumileds maintains a tolerance of ± 10% on flux measurements.
2. Luxeon types with even higher luminous flux levels will become available in the future. Please consult your Lumileds Authorized Distributor or Lumileds sales representative for more information.

Electrical Characteristics at 700mA, Junction Temperature, T_J = 25°C

Part Number	Forward Voltage V_F (V)[1] Min.	Typ.	Max.	Dynamic resistance[2] (Ω) R_D	Temperature coefficient of forward voltage[3] (mV/°C) $\Delta V_F / \Delta T_J$	Thermal resistance, junction to slug or case (°C/W) $R\theta_{J-C}$
LXHL-PW03	5.43	6.84	8.31	1.0	-4.0	8
LXHL-DW03	5.43	6.84	8.31	1.0	-4.0	8
LXHL-LW6C	5.43	6.84	8.31	1.0	-4.0	11
LXHL-FW6C	5.43	6.84	8.31	1.0	-4.0	11

Notes:

1. Lumileds maintains a tolerance of ± 0.06V on forward voltage measurements.
2. Dynamic resistance is the inverse of the slope in linear forward voltage model for LEDs. See Figure 3.
3. Measured between 25°C ≤ TJ ≤ 110°C at I_F = 700mA.

Optical Characteristics at 700mA, Junction Temperature, T_J = 25°C

Radiation Pattern	Color	Color Temperature CCT[1] Min.	Typ.	Max.
Lambertian	White	4500 K	5500 K	10,000 K
Side Emitting	White	4500 K	5500 K	10,000 K

Notes:

1. CRI (Color Rendering Index) for White product types is 70. Lumileds maintains a ±5% tester tolerance on CCT.
2. All products built with Indium Gallium Nitride (InGaN)

Optical Characteristics at 700mA, Junction Temperature, T_J = 25°C, Continued

Radiation pattern	Color	Total included angle[1] (degree) $\theta_{0.90V}$	viewing angle[2] (degree) $2\theta\ 1/2$
Lambertian	White	150	120

Notes:

1. Total angle at which 90% of total luminous flux is captured.
2. θ½ is the off axis angle from lamp centerline where the luminous intensity is ½ of the peak value.

Optical Characteristics at 700mA, Junction Temperature, T_J = 25°C, Continued

Radiation Pattern	Color	Typical total flux percent within first 45°[1] Cum $\Phi_{45°}$	Typical angle of peak intensity[2] θ_{PEAK}
Side Emitting	White	<30%	75°- 85°

Notes:

1. Cumulative flux percent within ± 45° from optical axis.
2. Off axis angle from lamp centerline where the luminous intensity reaches peak off axis value. On axis peak may be higher than off axis peak.

Absolute Maximum Ratings

Parameter	White
DC Forward Current (mA) [1]	700
Peak Pulsed Forward Current (mA)	1000
Average Forward Current (mA)	700
ESD Sensitivity [2]	± 16,000V HBM
LED Junction Temperature (°C)	135
Aluminum-Core PCB Temperature (°C)[3]	70
Storage Temperature (°C)	-40 to +120
Soldering Temperature (°C) [4]	260 for 5 Seconds Max

Notes:

1. Proper current derating must be observed to maintain junction temperature below the maximum. For more information, consult the Luxeon Design Guide, available upon request.
2. LEDs are not designed to be driven in reverse bias. Please consult Lumileds' application brief AB11 for further information.
3. Allowable maximum board temperature to avoid exceeding maximum junction temperature at maximum V_f limit at 700 mA based on thermal resistance of Star assembly.
4. Measured at leads, during lead soldering and slug attach, body temperature must not exceed 120°C. Luxeon emitters cannot be soldered by general IR or Vapor-phase reflow, nor by wave soldering. Lead soldering is limited to selective heating of the leads, such as by hot-bar reflow, fiber focussed IR, or hand soldering. The package back plane (slug) may not be attached by soldering, but rather with a thermally conductive adhesive. Electrical insulation between the slug and the board is required. Please consult Lumileds' Application Brief AB10 on Luxeon Emitter Assembly Information for further details on assembly methods.

Wavelength Characteristics, T_J = 25°C

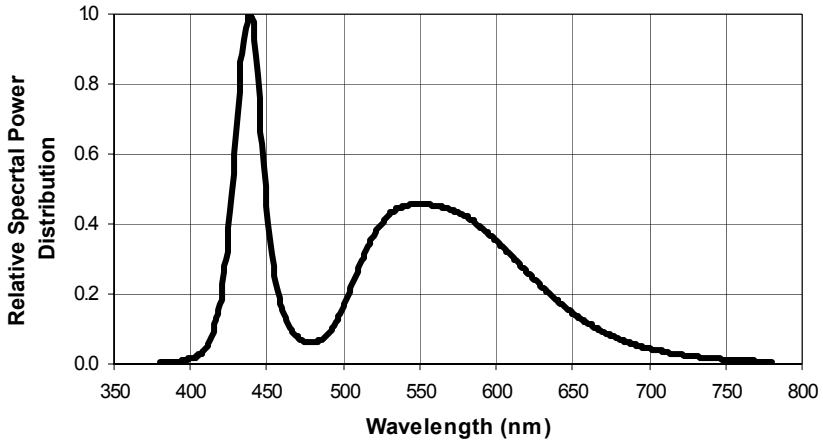

Figure 1.
White Color Spectrum of typical CCT part, integrated measurement.

Light Output Characteristics

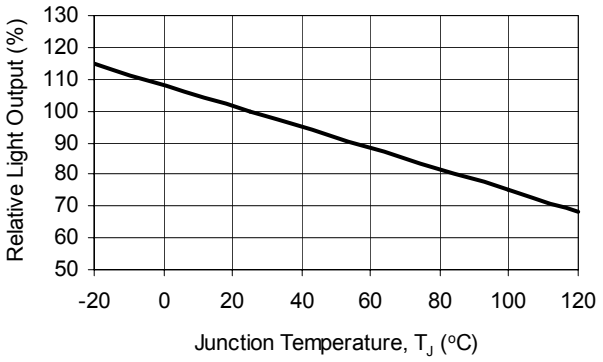

Figure 2.
Relative Photometric Flux vs. Junction Temperature

Forward Current Characteristics, T_J = 25°C

Note:
Driving these high power devices at currents less than the test conditions may produce unpredictable results and may be subject to variation in performance. Pulse width modulation (PWM) is recommended for dimming effects.

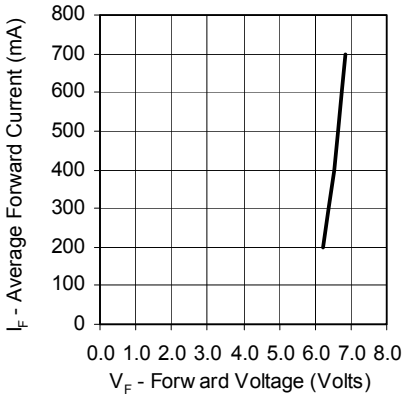

Figure 3.
Forward Current vs. Forward Voltage

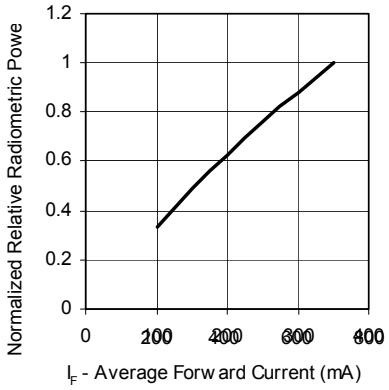

Figure 4.
Relative Luminous Flux vs. Forward Current at T_j = 25°C maintained.

Current Derating Curves

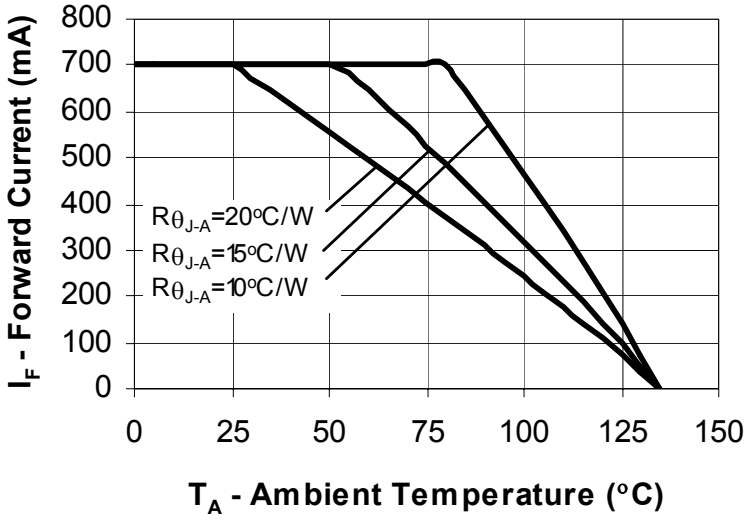

Figure 5
Maximum Forward Current vs. Ambient Temperature derating based on T_{JMAX} = 135 °C.

Representative Typical Spatial Radiation Pattern

Note:
For more detailed technical information regarding Luxeon radiation patterns, please consult your Lumileds Authorized Distributor or Lumileds sales representative.

Lambertian Radiation Pattern

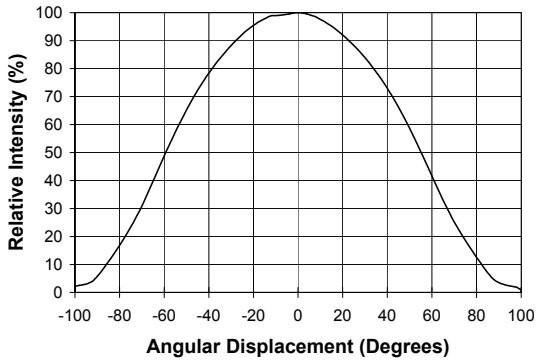

Figure 6.
Representative Typical Spatial Radiation Pattern for LXHL-PW03 and LXHL-LW6C.

Side Emitting Radiation Pattern

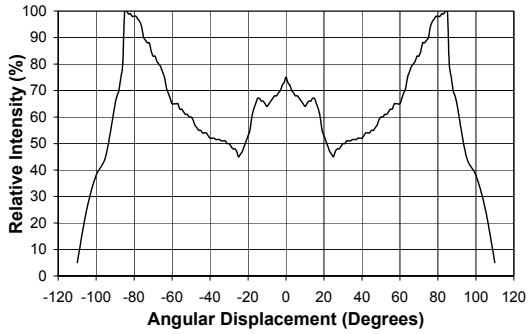

Figure 7.
Representative Typical Spatial Radiation Pattern for LXHL-DW03 and LXHL-FW6C.

Average Lumen Maintenance Characteristics

Heat sink temperature	Drive Current	Average Lumen Maintenance after 500 hours of operation
35° C	700 mA	90%
75° C	700 mA	75%
85°C	600 mA	65%

Note:
Luxeon V Portable is designed primarily for portable lighting and other applications requiring operating lifetimes of 500 hours and less. While the device will operate past 500 hours, its lumen maintenance cannot yet be characterized. Longer life versions of white Luxeon V will become available in the future.

Average lumen maintenance is dependant on heat-sink temperature. A recoverable light output loss may occur during the first 500 hours of operation.

For additional information please consult your Lumileds Authorized Distributor or Lumileds sales representative.

Emitter Reel Packaging

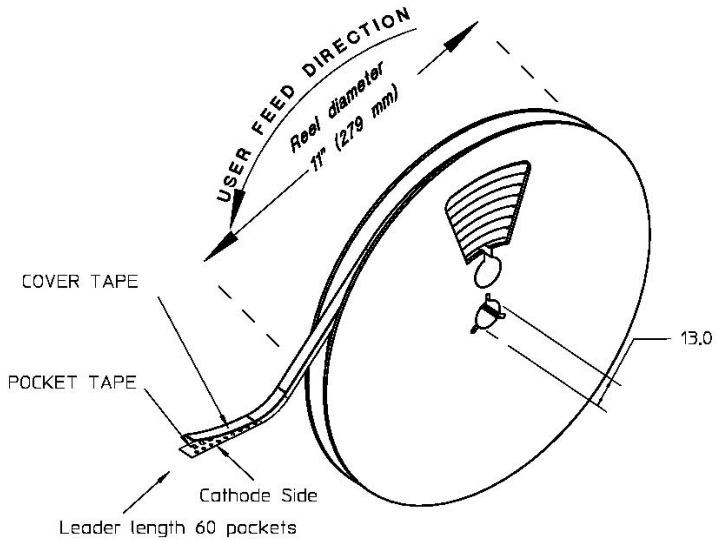

Figure 8.
Reel dimensions and orientation.

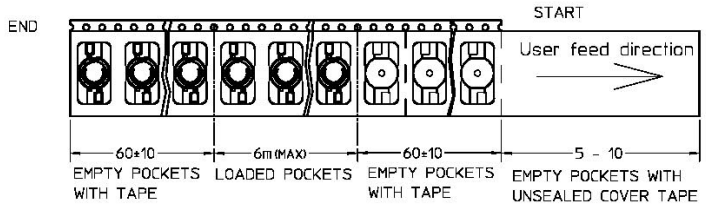

Figure 9.
Tape dimensions.

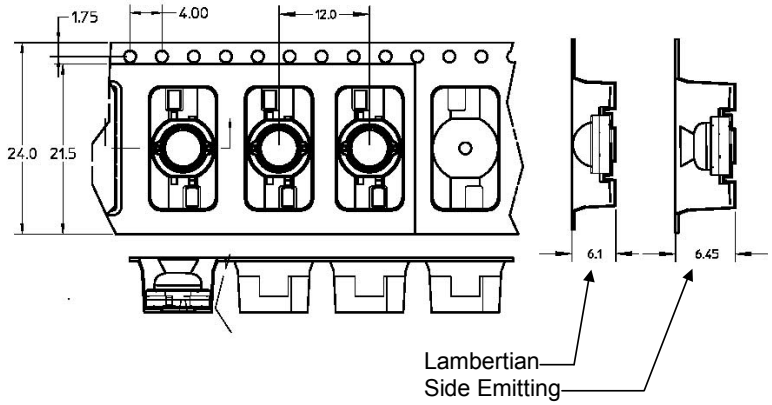

Notes:

1. Luxeon V emitters should be picked up by the body (not the lens) during placement. The inner diameter of the pick-up collet should be greater than or equal to 6.5 mm. Please consult Lumileds' Application Brief AB10 on Luxeon Emitter assembly information for further details on assembly methods.
2. Drawings not to scale.
3. All dimensions are in millimeters.
4. All dimensions without tolerances are for reference only.

About Luxeon

Luxeon is the new world of solid state lighting (LED) technology. Luxeon Power Light Source Solutions offer huge advantages over conventional lighting and huge advantages over other LED solutions. Luxeon enables partners to create and market products that, until now, were impossible to create. This means the opportunity to create products with a clear competitive advantage in the market. Products that are smaller, lighter, sleeker, cooler, and brighter. Products that are more fun to use, more efficient, and more environmentally conscious than ever before possible!

LUXEON™

Company Information

Luxeon is developed, manufactured and marketed by Lumileds Lighting, LLC. Lumileds is a world-class supplier of Light Emitting Diodes (LEDs) producing billions of LEDs annually. Lumileds is a fully integrated supplier, producing core LED material in all three base colors (Red, Green, Blue) and White. Lumileds has R&D development centers in San Jose, California and Best, The Netherlands. Production capabilities in San Jose, California and Malaysia.

Lumileds is pioneering the high-flux LED technology and bridging the gap between solid state LED technology and the lighting world. Lumileds is absolutely dedicated to bringing the best and brightest LED technology to enable new applications and markets in the Lighting world.

LUMILEDS™
LIGHT FROM SILICON VALLEY

Lumileds may make process or materials changes affecting the performance or other characteristics of Luxeon. These products supplied after such change will continue to meet published specifications, but may not be identical to products supplied as samples or under prior orders.

LUMILEDS

www.luxeon.com
www.lumileds.com

For technical assistance or the location of your nearest Lumileds sales office, call:

Worldwide:
+1 408-435-6044
US Toll free: 877-298-9455
Europe: +31 499 339 439
Asia: +65 6248 4759
Fax: 408-435-6855
Email us at info@lumileds.com

Lumileds Lighting U.S., LLC
370 West Trimble Road
San Jose, CA 95131